DWG NO.	SH.	REV
A1---1001-G1	1	

NATIONAL AERONAUTICS AND SPACE ADMINISTRATION
AMES RESEARCH CENTER
RESTORATION OF ELECTRICAL DISTRIBUTION SYSTEM
HIGH VOLTAGE
WP1

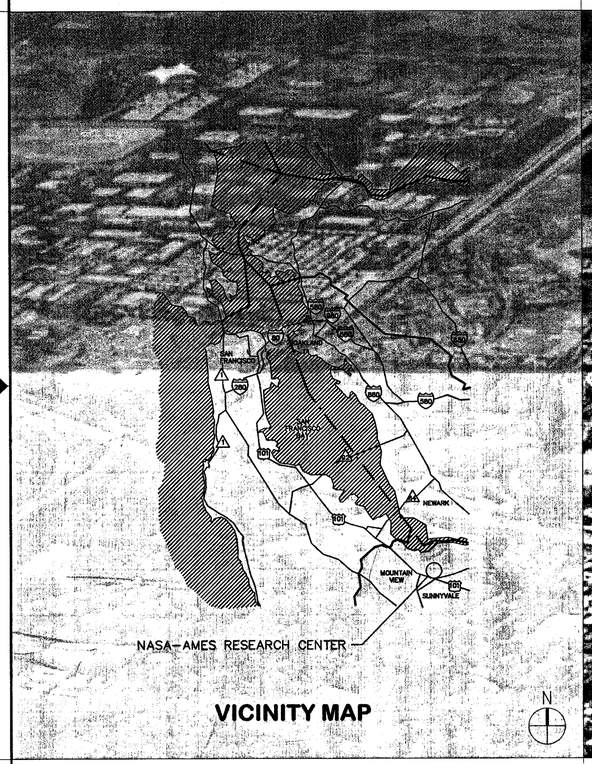

VICINITY MAP

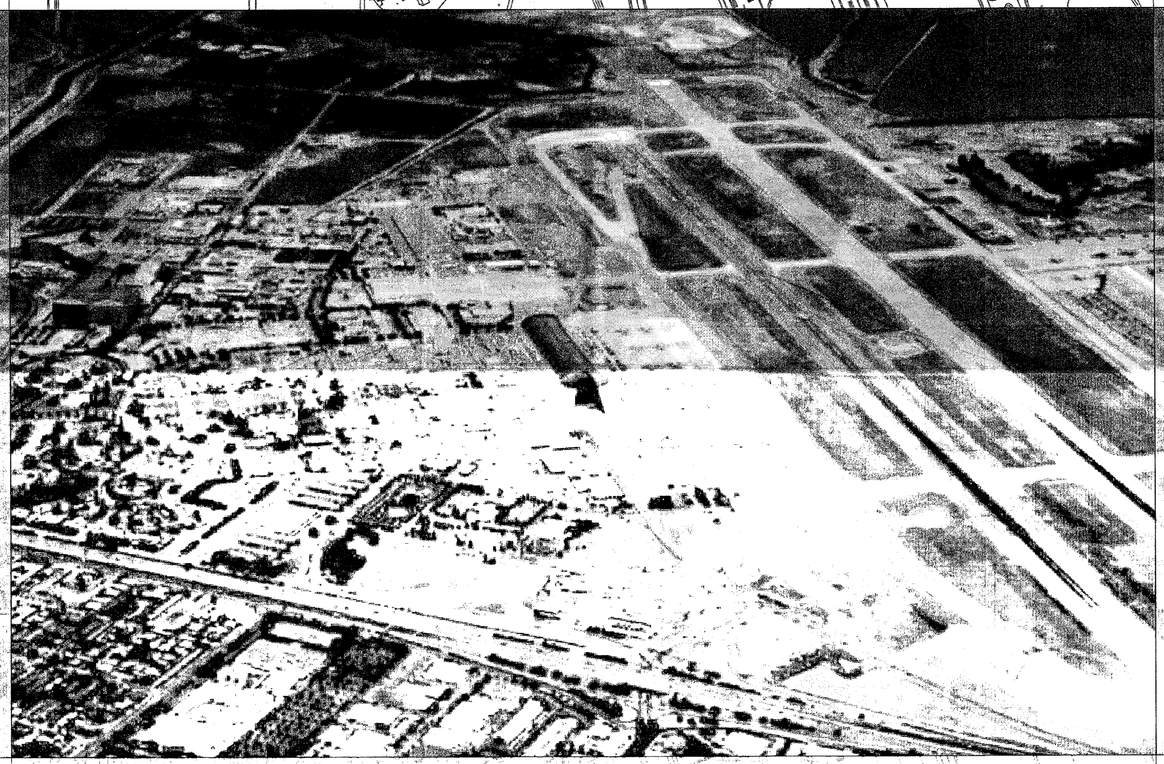

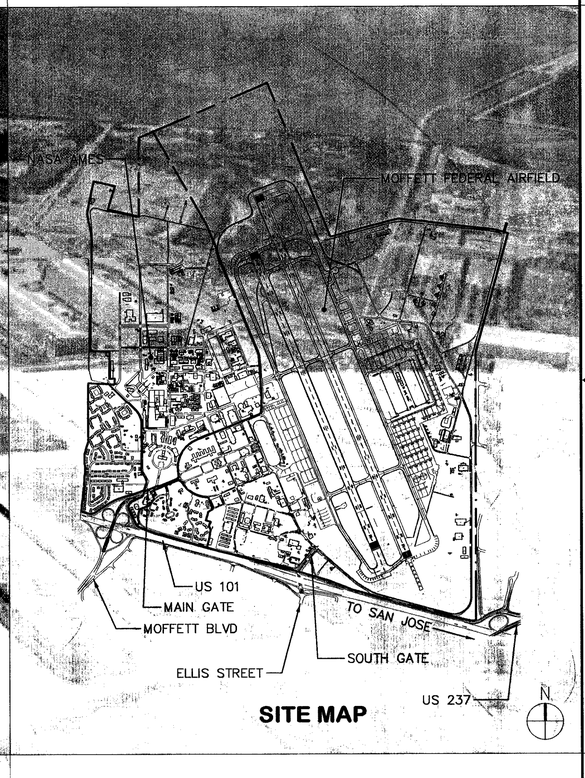

SITE MAP

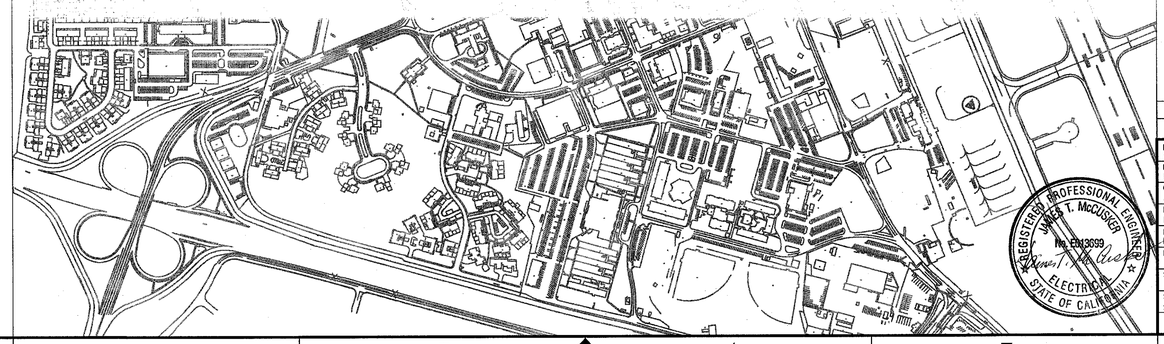

REGISTERED PROFESSIONAL ENGINEER
JAMES T. McCUSKER
No. EM13099
ELECTRICAL
STATE OF CALIFORNIA

Approved for Construction
Moffett Field Permit Board
Chief Building Official
Permit No. 11P038

ZONE	LETTER	DESCRIPTION	DRAWN	DATE	APPRVD
REVISIONS					

DRAWN P.ALDEN	DATE 9-22-11	Ames Research Center Moffett Field, California	
DESIGNED P.ALDEN	DATE 9-22-11	RESTORATION OF ELECTRICAL DISTRIBUTION SYSTEM--HIGH VOLTAGE WP1 GENERAL	
CHECKED J.McCUSKER	DATE 9-22-11	**TITLE SHEET**	
PROJMGR F.JONES	DATE 9.23.11		
REQUESTER D.TRAN	DATE 9/26/11		
R&QA	DATE		
SAFETY	DATE		
SUPERVISOR S.FRANKEL	DATE Oct 1 2011	SIZE D / CAGE CODE 25307 / A 1---1001-G1 REV	
	DATE	SCALE / INDEX / SHEET 1 OF 1	

FILE NAME: A1---1001-G001_1_RHV.DWG 9-21-11

60176753.0001

DWG: C:\temp\AcPublish_5240\A1---1001-G001_1_RHV-WP1.dwg Version: 17.1s (LMS Tech) User: polden
DATE: Sep 20, 2011 - 5:21:10 pm

DRAWING INDEX ~ REDS_HV - WP1

NASA NO.	SHEETS	DESCRIPTION	REV
GENERAL			
A1---1001-G1	1	TITLE SHEET	–
A1---1001-G2	2	DRAWING INDEX	–
A1---1001-G3	1	LOCATION MAP AND SCOPE OF WORK	–
A1---1001-G4	1	GENERAL PROJECT NOTES AND GENERAL SYMBOLS	–
ELECTRICAL			
A1---1001-E1	3	ELECTRICAL NOTES, SYMBOLS AND ABBREVIATIONS	–
STRUCTURAL			
A1---1001-S1	1	STRUCTURAL NOTES, SYMBOLS AND ABBREVIATIONS	–
MECHANICAL			
A1---1001-M1	1	MECHANCIAL NOTES, SYMBOLS AND ABBREVIATIONS	–
N213 WEST INDOOR SUBSTATION			
ELECTRICAL			
A1---1001-E2	1	ONE LINE DIAGRAM – DEMOLITION	–
A1---1001-E3	1	ONE LINE DIAGRAM – NEW WORK	–
A1---1001-E4	1	SITE PLANS – DEMOLITION & NEW WORK	–
A1---1001-E5	1	EQUIPMENT PLAN & ELEVATION – DEMOLITION	–
A1---1001-E6	1	EQUIPMENT PLAN & ELEVATION – NEW WORK	–
A1---1001-E7	1	PHOTOGRAPHIC DETAILS – DEMOLITION	–
A1---1001-E8	1	THREE LINE DIAGRAM – DEMOLITION	–
A1---1001-E9	1	THREE LINE DIAGRAM – NEW WORK	–
A1---1001-E10	1	VCB080 BREAKER CONTROL DIAGRAMS – DEMOLITION & NEW WORK	–
MECHANICAL			
A1---1001-M4	1	MECHANICAL PLAN AND ELEVATION – DEMOLITION	–
A1---1001-M5	1	MECHANICAL PLAN AND ELEVATION – NEW WORK	–
N213 EAST INDOOR SUBSTATION			
ELECTRICAL			
A1---1001-E11	1	ONE LINE DIAGRAM – DEMOLITION	–
A1---1001-E12	1	ONE LINE DIAGRAM – NEW WORK	–
A1---1001-E13	1	SITE PLANS – DEMOLITION & NEW WORK	–
A1---1001-E14	1	EQUIPMENT PLAN & ELEVATION – DEMOLITION	–
A1---1001-E15	1	EQUIPMENT PLAN & ELEVATION – NEW WORK	–
A1---1001-E16	1	PHOTOGRAPHIC DETAILS – DEMOLITION	–
A1---1001-E17	1	THREE LINE DIAGRAM – DEMOLITION	–
A1---1001-E18	1	THREE LINE DIAGRAM – NEW WORK	–
A1---1001-E19	1	VCB447 BREAKER CONTROL DIAGRAMS – DEMOLITION & NEW WORK	–
A1---1001-E20	1	MANHOLE NO E59 DETAILS–DEMOLITION & NEW WORK	–

NASA NO.	SHEETS	DESCRIPTION	REV
N223 OUTDOOR SUBSTATION			
ELECTRICAL			
A1---1001-E21	1	ONE LINE DIAGRAM – DEMOLITION	–
A1---1001-E22	1	ONE LINE DIAGRAM – NEW WORK	–
A1---1001-E23	1	SITE PLANS – DEMOLITION & NEW WORK	–
A1---1001-E24	1	EQUIPMENT PLAN & ELEVATION – DEMOLITION	–
A1---1001-E25	1	EQUIPMENT PLAN & ELEVATION – NEW WORK	–
A1---1001-E26	1	PHOTOGRAPHIC DETAILS – DEMOLITION	–
A1---1001-E27	1	THREE LINE DIAGRAM – DEMOLITION	–
A1---1001-E28	1	THREE LINE DIAGRAM – NEW WORK	–
A1---1001-E29	1	VCB492 BREAKER CONTROL DIAGRAMS – DEMOLITION & NEW WORK	–
STRUCTURAL			
A1---1001-S2	1	FOUNDATION PLAN	–
N227D OUTDOOR SUBSTATION			
ELECTRICAL			
A1---1001-E30	1	ONE LINE DIAGRAM – DEMOLITION	–
A1---1001-E31	1	ONE LINE DIAGRAM – NEW WORK	–
A1---1001-E32	1	SITE PLANS – DEMOLITION & NEW WORK	–
A1---1001-E33	1	N227 & N227D EQUIPMENT PLANS – DEMOLITION	–
A1---1001-E34	1	EQUIPMENT PLAN – NEW WORK	–
A1---1001-E35	1	THREE LINE DIAGRAM – NEW WORK	–
A1---1001-E36	1	VCB689 BREAKER CONTROL DIAGRAM – NEW WORK	–
A1---1001-E37	1	MANHOLES NO. E69 & E98 DETAILS – NEW WORK	–
STRUCTURAL			
A1---1001-S3	1	FOUNDATION PLAN	–
A1---1001-S4	1	SECTIONS	–
A1---1001-S5	1	FENCE DETAILS	–
MECHANICAL			
A1---1001-M2	1	MECHANICAL PLAN – DEMOLITION AND NEW WORK	–

REGISTERED PROFESSIONAL ENGINEER
JAMES T. McCUSKER
No. E013699
ELECTRICAL
STATE OF CALIFORNIA

Approved for Construction
Moffett Field Permit Board
Chief Building Official
Permit No. 11P038

ZONE	LETTER	DESCRIPTION	DRAWN	DATE	APPRVD

REVISIONS

DRAWN P.ALDEN	DATE 9.22.11	
DESIGNED N.NIZAMOVA	DATE 9/21/11	
CHECKED J.McCUSKER	DATE 9.22.11	
PROJMGR F.JONES	DATE 9.23.11	
REQUESTER D.TRAN	DATE 9/26/11	
R&QA	DATE	
SAFETY	DATE	
SUPERVISOR S.FRANKEL	DATE OCT 21 2011	

Ames Research Center
Moffett Field, California

RESTORATION OF ELECTRICAL DISTRIBUTION SYSTEM–HIGH VOLTAGE WP1
GENERAL

DRAWING INDEX

SIZE D | CAGE CODE 25307 | A 1---1001-G2 REV 1
SCALE | INDEX | SHEET 1 OF 2

FILE NAME: A1---1001-G002_1_RHV.DWG 9-21-11

60176753.0001

DWG: \\Kf13f52\Proj\REDS\60176753 (K10018)_REDS – High Voltage\500 CAD\REDS_HV-WP1_Shared-WP1\G\Sheet\A1---1001-G002_1_RHV.dwg Version: 17.1s (LMS Tech) User: palden
DATE: Sep 20, 2011 - 5:21:18 pm

DRAWING INDEX ~ REDS_HV - WP1

NASA NO.	SHEETS	DESCRIPTION	REV
N243 INDOOR/OUTDOOR SUBSTATION			
ELECTRICAL			
A1---1001-E38	3	ONE LINE DIAGRAM – DEMOLITION	–
A1---1001-E39	3	ONE LINE DIAGRAM – NEW WORK	–
A1---1001-E40	1	SITE PLANS – DEMOLITION & NEW WORK	–
A1---1001-E41	1	EQUIPMENT PLAN – DEMOLITION	–
A1---1001-E42	1	EQUIPMENT PLAN – NEW WORK	–
A1---1001-E43	2	ELEVATION AND DETAILS – DEMOLITION & NEW WORK	–
A1---1001-E44	1	PHOTOGRAPHIC DETAILS – DEMOLITION	–
A1---1001-E45	2	THREE LINE DIAGRAM – DEMOLITION & NEW WORK	–
A1---1001-E46	2	VCB494/495 BREAKER CONTROL DIAGRAMS – DEMOLITION & NEW WORK	–
A1---1001-E47	1	MANHOLE NO. E16 DETAILS – DEMOLITION & NEW WORK	–
A1---1001-E48	1	MANHOLE NO. E17 DETAILS – DEMOLITION & NEW WORK	–
A1---1001-E49	1	MANHOLE NO. E126 DETAILS – DEMOLITION & NEW WORK	–
A1---1001-E50	1	MANHOLE NO. E148 DETAILS – DEMOLITION & NEW WORK	–
STRUCTURAL			
A1---1001-S6	1	FOUNDATION PLAN	–
A1---1001-S7	1	SECTIONS	–
N246 INDOOR SUBSTATION			
ELECTRICAL			
A1---1001-E51	1	ONE LINE DIAGRAM – DEMOLITION	–
A1---1001-E52	1	ONE LINE DIAGRAM – NEW WORK	–
A1---1001-E53	1	SITE PLANS – DEMOLITION & NEW WORK	–
A1---1001-E54	1	EQUIPMENT PLAN & ELEVATION – DEMOLITION	–
A1---1001-E55	1	EQUIPMENT PLAN & ELEVATION – NEW WORK	–
A1---1001-E56	1	PHOTOGRAPHIC DETAILS – DEMOLITION	–
A1---1001-E57	1	THREE LINE DIAGRAM – DEMOLITION	–
A1---1001-E58	1	THREE LINE DIAGRAM – NEW WORK	–
A1---1001-E59	1	VCB542 BREAKER CONTROL DIAGRAMS – DEMOILITON & NEW WORK	–
A1---1001-E60	1	MANHOLE NO E69 DETAILS	–
A1---1001-E61	1	VAULT 5 DETAIL – DEMOLITION	–
A1---1001-E62	1	VAULT 5 DETAIL – NEW WORK	–
STRUCTURAL			
A1---1001-S8	1	FOUNDATION PLAN	–
MECHANICAL			
A1---1001-M3	1	MECHANICAL PLAN – DEMOLITION AND NEW WORK	–
TYPICAL ELECTRICAL DETAILS			
A1---1001-E63	1	TYPICAL SIGNAGE AND EQUIPMENT NAMEPLATE SCHEDULE	–
A1---1001-E64	1	TYPICAL RELAY UNITS PANEL MOUNTING DETAILS	–
A1---1001-E65	1	TYPICAL 50/51 RELAY WIRING AND INTERCONNECTION DIAGRAM	–
A1---1001-E66	1	TYPICAL GROUNDING DETAILS	–
A1---1001-E67	1	TYPICAL MISCELLANEOUS DETAILS	–
A1---1001-E68	1	TYPICAL SWITCHGEAR ELEVATION	–
A1---1001-E69	1	TYPICAL CABLE ROUTING DETAILS	–

NASA NO.	SHEETS	DESCRIPTION	REV

REGISTERED PROFESSIONAL ENGINEER
JAMES T. McCUSKER
No. E013699
ELECTRICAL
STATE OF CALIFORNIA

Approved for Construction
Moffett Field Permit Board
Chief Building Official
Permit No. 11P038

ZONE	LETTER	DESCRIPTION	DRAWN	DATE	APPRVD
		REVISIONS			

DRAWN P.ALDEN	DATE 9.22.11	
DESIGNED N.NIZAMOVA	DATE 9/22/11	
CHECKED J.McCUSKER	DATE 9-27-11	
PROJMGR F.JONES	DATE 9.23.11	
REQUESTER D.TRAN	DATE 9/26/11	
R&QA	DATE	
SAFETY	DATE	
SUPERVISOR S.FRANKEL	DATE OCT 21 2011	

Ames Research Center
Moffett Field, California

RESTORATION OF ELECTRICAL DISTRIBUTION SYSTEM-HIGH VOLTAGE WP1
GENERAL

DRAWING INDEX

SIZE D | CAGE CODE 25307 | A 1---1001-G2 REV
SCALE | INDEX | SHEET 2 OF 2

FILE NAME: A1---1001-G002_2_RHV.DWG 9-21-11

60176753.0001

DWG: \\N213FS2\Proj\REDS\60176753 (K10018)_REDS - High Voltage\500 CAD\REDS_HV-WP1_Shared-WP1\GA\Sheet\A1---1001-G002_2_RHV.dwg Version: 17.1s (LMS Tech) User: pdden
DATE: Sep 20, 2011 - 5:27:24 pm

DWG NO.	SH.	REV
A1---1001-G3	1	

LOCATION MAP

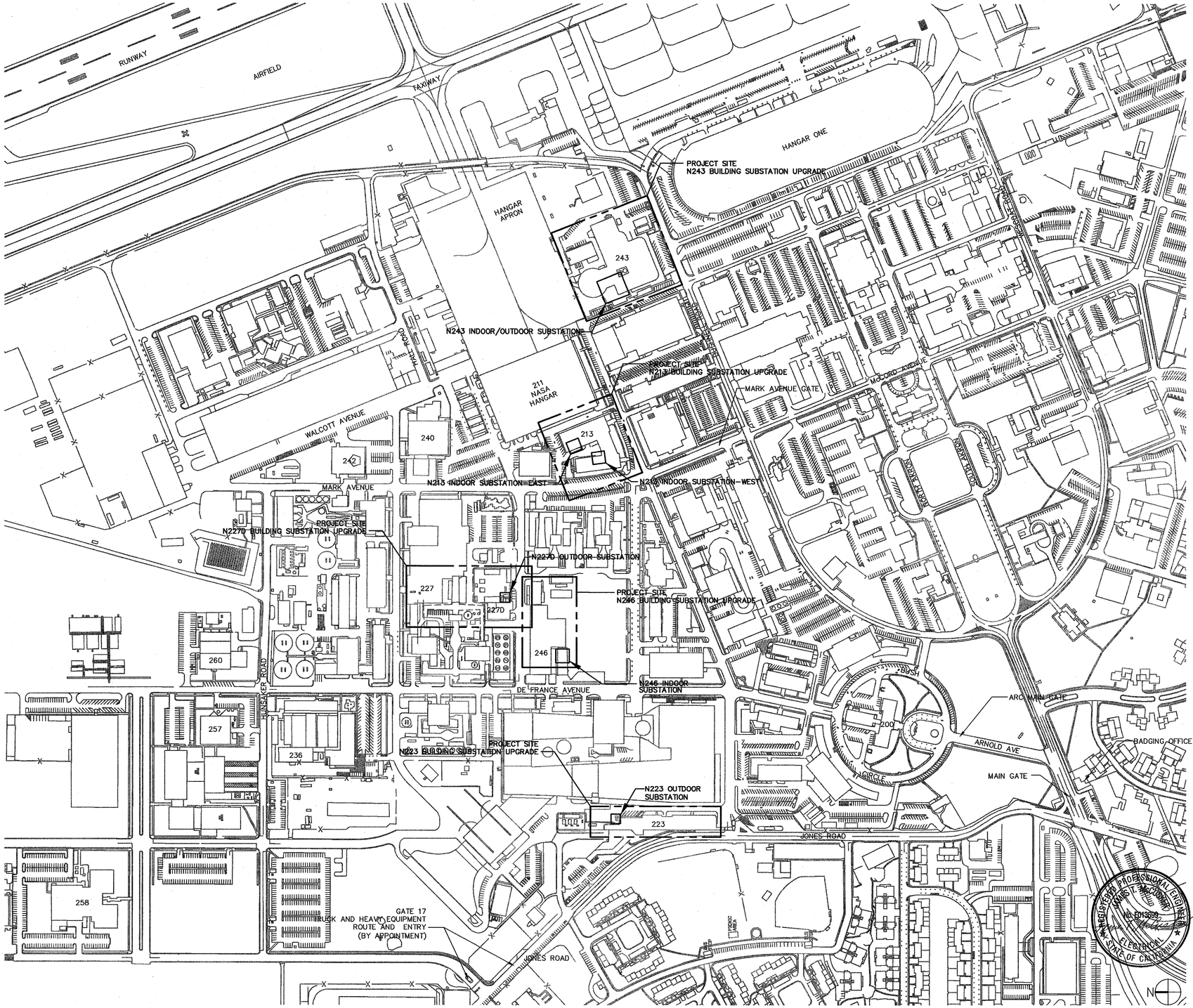

PROJECT TITLE

REDS HV WP1

SCOPE OF WORK

CAUTION: WP1 MUST BE COMPLETED BEFORE WP2 CAN BE STARTED.

1. N213 BUILDING WEST SUBSTATION UPGRADE

a) REMOVE AND REPLACE BUILDING SUBSTATION EQUIPMENT AS INDICATED ON THE DRAWINGS.
b) PROVIDE NEW WIRING, CONDUIT AND ASSOCIATED EQUIPMENT TO COMPLETE THE INSTALLATION.
c) REMOVE AND DISPOSE OF ASBESTOS AND LEAD PER CAL-OSHA REGULATIONS, FEDERAL OSHA REGULATIONS AND NASA SPECIFICATION 02080.
d) PERFORM FIELD TESTING OF RELAYS AND NEW BUILDING EQUIPMENT TO THE SATISFACTION OF THE CONTRACTING OFFICER.

2. N213 BUILDING EAST SUBSTATION UPGRADE

a) REMOVE AND REPLACE BUILDING SUBSTATIONS AND DISTRIBUTION EQUIPMENT AS INDICATED ON THE DRAWINGS.
b) REMOVE & REPLACE MEDIUM VOLTAGE CABLES AS INDICATED ON DRAWINGS.
c) PROVIDE NEW WIRING, CONDUIT AND ASSOCIATED EQUIPMENT TO COMPLETE THE INSTALLATION.
d) REMOVE AND DISPOSE OF ASBESTOS AND LEAD PER CAL-OSHA REGULATIONS, FEDERAL OSHA REGULATIONS AND NASA SPECIFICATION 02080.
e) PERFORM FIELD TESTING OF RELAYS AND NEW BUILDING EQUIPMENT TO THE SATISFACTION OF THE CONTRACTING OFFICER.

3. N223 BUILDING SUBSTATION UPGRADE

a) REMOVE AND REPLACE EXISTING 7.2kV SWITCHGEAR WITH NEW 15kV SWITCHGEAR.
b) REPLACE FEEDER FROM SWITCHGEAR TO TRANSFORMER T27 WITH 15kV CABLES.
c) REMOVE AND DISPOSE OF ASBESTOS AND LEAD PER CAL-OSHA REGULATIONS, FEDERAL OSHA REGULATIONS AND NASA SPECIFICATION 02080.
d) PERFORM FIELD TESTING OF RELAYS AND NEW EQUIPMENT TO THE SATISFACTION OF THE CONTRACTING OFFICER.

4. N227D BUILDINGS SUBSTATION UPGRADE

a) REMOVE AND REPLACE BUILDING SUBSTATION AS INDICATED ON THE DRAWINGS.
b) REMOVE MEDIUM VOLTAGE CABLES AS INDICATED ON THE DRAWINGS.
c) PROVIDE NEW WIRING, CONDUIT, DUCTBANK SYSTEMS AND ASSOCIATED EQUIPMENT TO COMPLETE THE INSTALLATION.
d) REMOVE AND DISPOSE OF ASBESTOS AND LEAD PER CAL-OSHA REGULATIONS, FEDERAL OSHA REGULATIONS AND NASA SPECIFICATION 02080.
e) PERFORM FIELD TESTING OF RELAYS AND NEW EQUIPMENT TO THE SATISFACTION OF THE CONTRACTING OFFICER.

5. N243 BUILDING SUBSTATION UPGRADE

a) REMOVE AND REPLACE BUILDING SUBSTATION AND DISTRIBUTION EQUIPMENT INCLUDING ELECTRO-MECHANICAL OR NON-STANDARD RELAYS AS INDICATED ON THE DRAWINGS.
b) REMOVE & REPLACE MEDIUM VOLTAGE CABLES AS INDICATED ON DRAWINGS.
c) PROVIDE NEW WIRING, CONDUIT AND ASSOCIATED EQUIPMENT TO COMPLETE THE INSTALLATION.
d) REMOVE AND DISPOSE OF ASBESTOS AND LEAD PER CAL-OSHA REGULATIONS, FEDERAL OSHA REGULATIONS AND NASA SPECIFICATION 02080.
e) PERFORM FIELD TESTING OF RELAYS AND NEW BUILDING EQUIPMENT TO THE SATISFACTION OF THE CONTRACTING OFFICER.

6. N246 BUILDING SUBSTATION UPGRADE.

a) REMOVE AND REPLACE BUILDING SUBSTATIONS EQUIPMENT AS INDICATED ON THE DRAWINGS.
b) REMOVE & REPLACE MEDIUM VOLTAGE CABLES AS INDICATED ON DRAWINGS.
c) PROVIDE NEW WIRING, CONDUIT AND ASSOCIATED EQUIPMENT TO COMPLETE THE INSTALLATION.
d) REMOVE AND DISPOSE OF ASBESTOS AND LEAD PER CAL-OSHA REGULATIONS, FEDERAL OSHA REGULATIONS AND NASA SPECIFICATION 02080.
e) PERFORM FIELD TESTING OF RELAYS AND NEW BUILDING EQUIPMENT TO THE SATISFACTION OF THE CONTRACTING OFFICER.

NOTE: SCOPE OF WORK PROVIDED HERE IS FOR REFERENCE ONLY. REFER TO DRAWINGS FOR SPECIFIC SCOPE OF WORK.

Approved for Construction
Moffett Field Permit Board

Chief Building Official
Permit No. 11P038

ZONE	LETTER	DESCRIPTION	DRAWN	DATE	APPRVD
		REVISIONS			

DRAWN P.ALDEN	DATE 9-22-11	
DESIGNED N.NIZAMOVA	DATE 9/21/11	
CHECKED J.MCGUSKER	DATE 9-22-11	
PROJMGR F.JONES	DATE 9.23.11	
REQUESTER D.TRAN	DATE 9/23/11	
R&QA	DATE	
SAFETY	DATE	
SUPERVISOR S.FRANKEL	DATE OCT 21 2011	

NASA
Ames Research Center
Moffett Field, California

RESTORATION OF ELECTRICAL DISTRIBUTION SYSTEM-HIGH VOLTAGE WP1
GENERAL

LOCATION MAP AND SCOPE OF WORK

SIZE	CAGE CODE	DWG NO.	REV
D	25307	A1---1001-G3	
SCALE		INDEX	SHEET 1 OF 1

FILE NAME: A1---1001-G003_1_RHV.DWG 9-21-11

80176753.0001

DWG: \\N215FS2\Proj\REDS\80176753 (K10018)_REDS - High Voltage\50D CAD\REDS_HV-WP1_Stored-WP1\{0\Sheet\A1---1001-G003_1_RHV.dwg Version: 17.1s (LMS Tech) User: pdden
DATE: Sep 20, 2011 - 5:21:31 pm

GENERAL NOTES

1. THIS PROJECT HAS BEEN DESIGNED COMPLETELY IN ENGLISH UNITS. ALL INSPECTIONS WILL TAKE PLACE IN ENGLISH DIMENSIONS. SHOP DRAWINGS MUST BE SUBMITTED WITH ENGLISH DIMENSIONS UNLESS OTHERWISE DIRECTED BY THE CONTRACTING OFFICER (COTR).
2. ANY REQUEST FOR MODIFICATIONS TO THE PLANS & SPECIFICATIONS MUST BE SUBMITTED TO THE CONTRACTING OFFICER IN WRITING.
3. ALL DISCREPANCIES AND OMISSIONS ON THE DRAWINGS, SPECIFICATIONS AND EXISTING CONDITION SHALL BE BROUGHT TO THE ATTENTION OF THE CONTRACTING OFFICER BEFORE PROCEEDING WITH ANY ELEMENT OF THIS PROJECT.
4. THE CONTRACTOR, PRIOR TO BIDDING, SHALL VISIT THE JOB SITE TO BECOME ACQUAINTED WITH THE EXISTING INSTALLATION AND SYSTEMS RELATED TO HIS WORK AND SHALL INCLUDE IN THE BID PROPOSAL ALL LABOR AND MATERIALS INCLUDING DESIGN SERVICES REQUIRED FOR THE INSTALLATION TO BE COMPLETE AND OPERATIONAL.
5. THE CONTRACTOR SHALL MAINTAIN AN UP-TO-DATE "AS-BUILT" DRAWING SET AT THE JOBSITE. THE "AS-BUILT" DRAWING SET SHALL BE RED-LINED TO SCALE TO REFLECT ALL APPROVED CHANGES TO THE DESIGN DRAWINGS. THE "AS-BUILT" DRAWING SET SHALL BE KEPT CLEAN AND IN GOOD CONDITION, AND SHALL BE TURNED OVER TO THE CONTRACTING OFFICER AT THE COMPLETION OF THE PROJECT.
6. PRIOR TO START OF WORK, THE CONTRACTOR SHALL SUBMIT A COMPREHENSIVE CONSTRUCTION PHASING PLAN WITH SEQUENCE OF WORK TO MINIMIZE SHUTDOWN TO THE BUILDING IN ACCORDANCE WITH THE SPECIFICATIONS FOR APPROVAL BY THE CONTRACTING OFFICER. THE TEMPORARY CONNECTIONS SHOWN IN THE DRAWINGS ARE THE MINIMUM CONNECTIONS REQUIRED THAT ARE SHOWN FOR GUIDANCE ONLY. THE CONTRACTOR SHALL PROPOSE ALTERNATIVE ARRANGEMENT TO PROVIDE THE REQUIRED TEMPORARY CONNECTIONS CONSISTENT WITH THE CONSTRUCTION PHASING PLAN FOR APPROVAL.
7. THE CONTRACTOR SHALL PREPARE AND SUBMIT A CONSTRUCTION SCHEDULE FOR THE WORK GIVING APPROXIMATE ON-SITE DELIVERY DATES FOR CONSTRUCTION MATERIALS. THE CONTRACTOR SHALL NOTIFY THE COTR OF ANY POSSIBLE CONSTRUCTION DELAYS AFFECTING OCCUPANCY THAT MAY ARISE DUE TO THE AVAILABILITY OF SPECIFIED PRODUCTS.
8. ALL ITEMS CALLED OUT ON THE DRAWINGS ARE NEW AND SHALL BE SUPPLIED AND INSTALLED BY THIS CONTRACT UNLESS NOTED OTHERWISE.
9. MATERIALS INDICATED WITH SCREENED LINES INDICATE EXISTING ITEMS TO REMAIN, OR WORK NOT IN CONTRACT (NIC).
10. THE CONTRACTOR SHALL PERFORM NO PORTION OF THE WORK AT ANY TIME WITHOUT CONTRACT DOCUMENTS OR, WHERE REQUIRED BY APPROVED SHOP DRAWINGS, PRODUCT DATA, OR SAMPLES FOR EACH PORTION OF THE WORK.
11. THE CONTRACTOR SHALL PERFORM THE WORK IN ACCORDANCE WITH ALL LAWS, CODES, ORDINANCES, RULES AND REGULATIONS OF ALL GOVERNING AGENCIES IDENTIFIED ON THE DRAWINGS OR SPECIFICATIONS.
12. THE CONTRACTOR SHALL CONFINE OPERATIONS AT THE SITE TO AREAS PERMITTED BY LAW, ORDINANCES, PERMITS, AND THE CONTRACT DOCUMENTS.
13. THE CONTRACTOR SHALL BE RESPONSIBLE FOR CHECKING CONTRACT DOCUMENTS, FIELD CONDITIONS, AND DIMENSIONS FOR ACCURACY AND FOR CONFIRMING THAT THE PROJECT IS BUILDABLE AS SHOWN BEFORE PROCEEDING WITH THE CONSTRUCTION. IF THERE ARE ANY QUESTIONS, REGARDING THESE OR OTHER COORDINATION QUESTIONS, THE CONTRACTOR SHALL SUBMIT THEM IN WRITING TO THE COTR.
14. INFORMATION RELATED TO THE EXISTING CONDITIONS GIVEN HEREIN WAS OBTAINED FROM GOVERNMENT PROVIDED DOCUMENTATION AVAILABLE TO THE ARCHITECT AT THE TIME OF DESIGN. DRAWINGS AND SPECIFICATIONS ARE INTENDED FOR ASSISTANCE AND GUIDANCE, BUT EXACT DIMENSIONS AND ELEVATIONS SHALL BE GOVERNED BY ACTUAL CONDITIONS AT THE SITE AND SHALL BE VERIFIED BY THE CONTRACTOR.
15. THE CONTRACTOR IS RESPONSIBLE FOR COORDINATING ALL ARCHITECTURAL, STRUCTURAL, ELECTRICAL (INCLUDING LIGHTING), AND PLUMBING, WORK SO AS TO ENSURE THAT REQUIRED CLEARANCES FOR INSTALLATION AND MAINTENANCE OF ALL EQUIPMENT ARE PROVIDED. WHERE CONFLICT OCCURS, VERIFY WITH COTR BEFORE PROCEEDING.
16. THERE SHALL BE NO SUBSTITUTE OF MATERIALS WHERE A MANUFACTURER IS SPECIFIED. WHERE THE TERM "OR APPROVED EQUAL" IS USED, THE COTR ALONE SHALL DETERMINE EQUALITY BASED UPON INFORMATION SUBMITTED BY THE CONTRACTOR. SUBSTITUTIONS SHALL NOT BE MADE UNLESS CUT SHEETS SUBMITTED TO THE COTR ARE APPROVED.
17. THE CONTRACTOR SHALL COORDINATE THE WORK WITH THE COTR SO AS TO MINIMIZE OR ELIMINATE INTERFERENCE WITH ONGOING TENANT OPERATIONS.
18. THE CONTRACTOR SHALL SCHEDULE AND PERFORM THE WORK DURING NORMAL WORKING HOURS UNLESS OTHERWISE APPROVED BY THE COTR. WORK ON THIS PROJECT WILL REQUIRE PHASING TO MINIMIZE DISRUPTION TO THE OCCUPANTS. PERFORM ANY WORK THAT WILL CREATE EXCESSIVE NOISE OR DISRUPTION, SUCH AS CORE DRILLING, DURING OFF HOURS.
19. THE CONTRACTOR SHALL NOT PROCEED WITH ANY WORK REQUIRING ADDITIONAL COMPENSATION BEYOND THE CONTRACT AMOUNT WITHOUT WRITTEN AUTHORIZATION. FAILURE TO OBTAIN AUTHORIZATION FROM THE CONTRACTING OFFICER WILL INVALIDATE ANY CLAIM FOR EXTRA COMPENSATION.
20. NO WORK DEFECTIVE IN CONSTRUCTION, QUALITY, OR DEFICIENT IN ANY REQUIRMENTS OF THE CONTRACT DOCUMENTS SHALL BE ACCEPTABLE DESPITE THE DESIGNERS FAILURE TO DISCOVER OR POINT OUT DEFECTS OR DEFICIENCES DURING CONSTRUCTION. DEFECTIVE WORK REVEALED WITHIN THE TIME REQUIRED BY GUARANTEES SHALL BE REPLACED BY WORK COFORMING WITH THE INTENT OF THE CONTRACT. NO PAYMENT, EITHER PARTIAL OR FINAL, SHALL BE CONSTRUED AS AN ACCEPTANCE OF DEFECTIVE WORK OR IMPROPER MATERIALS.
21. DIMENSIONS ARE NOT ADJUSTABLE UNLESS NOTED (+/-,+,or-), WITHOUT THE COTR'S WRITTEN APPROVAL.
22. DO NOT SCALE DRAWINGS: DIMENSIONS SHALL GOVERN. DETAILS SHALL GOVERN OVER PLANS AND ELEVATIONS. LARGE SCALE DETAILS SHALL GOVERN OVER SMALL SCALE DETAILS. LARGE SCALE PLANS SHALL GOVERN OVER SMALL SCALE PLANS. IF UNABLE TO LOCATE DIMENSIONS FOR ANY ITEM OF WORK, CONSULT THE COTR PRIOR TO CONSTRUCTION.
23. UTILITIES, ELECTRIC, TELEPHONE, GAS, WATER, SIGNAL AND COMMUNICATIONS SYSTEM DAMAGED AS A RESULT OF THIS WORK SHALL BE RESTORED IN WORKING CONDITION AT THE CONTRACTOR'S EXPENSE TO THE SATISFACTION OF THE GOVERNMENT.
24. THE CONTRACTOR SHALL IDENTIFY ANY EXISTING DAMAGE TO THE SITE, AND SHALL NOTIFY THE CONTRACTING OFFICER OF ANY SUCH DAMAGE PRIOR TO STARTING WORK.
25. THE CONTRACTOR SHALL SUBMIT A CONFINED SPACE ENTRY PLAN FOR APPROVAL BY THE CONTRACTING OFFICER.
26. PRODUCTS AND SERVICES ON THESE DRAWINGS TAKE PRECEDENCE OVER PRODUCTS AND SERVICES SPECIFIED IN THE SPECIFICATIONS.

WARNING:
ALL CONCRETE PAD DIMENSIONS AND LOCATIONS ARE PREDICATED ON ASSUMED SIZES OF THE EQUIPMENT. DIMENSIONS AND LOCATIONS SHALL BE ADJUSTED AS NECESSARY TO ACCOMMODATE THE SELECTED OEM.

DEMOLITION NOTES

1. THE CONTRACTOR SHALL ATTEND A PRE-DEMOLITION JOBSITE MEETING CONDUCTED BY THE CONTRACTING OFFICER PRIOR TO DEMOLITION TO SCHEDULE THE WORK WITH THE USER SO AS NOT TO INTERFERE WITH USER'S NORMAL BUSINESS OPERATIONS.
2. DEMOLITION IS NOT LIMITED TO ONLY WHAT IS SHOWN ON THIS OR OTHER DRAWINGS. THE INTENT IS TO INDICATE THE GENERAL SCOPE OF DEMOLITION REQUIRED TO COMPLETE THE PROJECT WITH THE CONSTRUCTION DRAWINGS.
3. FOR PROTECTION OF NASA STAFF AND THE PUBLIC VISITING ADJACENT FACILITIES, THE CONTRACTOR SHALL ERECT REQUIRED PROTECTIVE BARRICADES, SHIELDS, AND WALLS TO PROVIDE SAFE ACCESS TO THE FACILITY. THE CONTRACTOR SHALL BE RESPONSIBLE FOR PROVIDING SECURITY AND CONTROLLED ACCESS INTO THE WORK SITE.
4. ERECT AND MAINTAIN TEMPORARY BRACING, BARRICADES, SIGNS, AND OTHER MEASURES AS NECESSARY TO PROTECT THE PUBLIC, WORKERS, PERSONS, AND ADJOINING PROPERTY FROM DAMAGE FROM DEMOLITION WORK IN ACCORDANCE WITH THE APPLICABLE CODES AND REGULATIONS.
5. REMOVE DEBRIS FROM THE PREMISES DAILY. KEEP OCCUPIED AREAS ADJACENT TO DEMOLITION ZONES BROOM CLEAN AND FREE OF DEBRIS.
6. UPON COMPLETION OF THE DEMOLITION WORK, THE GENERAL CONTRACTOR SHALL ENSURE THAT ALL AREAS ARE LEFT BROOM CLEAN AND FREE OF DEBRIS.
7. THE GENERAL CONTRACTOR SHALL FURNISH A SYSTEM OF TEMPORARY LIGHTS THROUGHOUT THE SPACE UNDER CONSTRUCTION, AS REQUIRED.
8. PROTECT FROM DAMAGE MATERIALS NOT REQUIRED TO BE REMOVED OR DEMOLISHED. RESTORE TO ORIGINAL CONDITION SURFACES WHICH HAVE BEEN DISTURBED BY DEMOLITION AND ARE INDICATED TO REMAIN.
9. COORDINATE EXTENT OF DEMOLITION WORK WITH NEW WORK.
10. NOT USED.
11. ALL BASE BUILDING ELECTRICAL OUTLETS, TELECOMMUNICATIONS OUTLETS, LIGHT FIXTURES, ETC, ARE TO REMAIN UNLESS OTHERWISE NOTED.
12. WORK SHALL BE SCHEDULED TO HOLD UTILITY OUTAGES TO A MINIMUM. SUBMIT REQUESTS FOR UTILITY OUTAGES & CONNECTION IN WRITING TO THE CONTRACTING OFFICER TECHNICAL REPRESENTATIVE (COTR) AT LEAST TEN DAYS IN ADVANCE OF THE TIME REQUIRED.
13. THE CONTRACTING OFFICER RETAINS FIRST SALVAGE RIGHTS TO ALL EXISTING EQUIPMENT REMOVED UNDER THIS CONTRACT. THE CONTRACTOR SHALL CONSULT WITH THE CONTRACTING OFFICER FOR DISPOSITION OF THE EXISTING EQUIPMENT TO BE REMOVED. THE CONTRACTOR SHALL INCLUDE IN HIS BID PROPOSAL ALL COSTS RELATED TO THE DISPOSAL OF THE EXISTING EQUIPMENT REMOVED UNDER THIS CONTRACT. TO AN OFFSITE LOCATION IN ACCORDANCE WITH STATE AND LOCAL LAWS PERTAINING TO HAZARDOUS WASTE.
14. TRENCHING AND OTHER EXCAVATION WORK SHALL BE ACCOMPLISHED WITH EXTREME CARE TO PROTECT ALL EXISTING UNDERGROUND INSTALLATIONS WHICH SHALL REMAIN. EXISTING INSTALLATIONS INDICATED ON THE DRAWINGS ARE BASED ON AVAILABLE AS-BUILT DRAWINGS AND VISUAL VERIFICATIONS ONLY. POSSIBILITIES EXIST THAT NOT ALL UNDERGROUND INSTALLATIONS ARE INDICATED. OTHER INFORMATION/LOCATION OF ALL EXISTING UNDERGROUND INSTALLATION WHICH SHALL BE AFFECTED BY THE WORK SHALL BE PROVIDED BY NASA, UPON REQUEST.
15. ALL AREAS AFFECTED BY DEMOLITION OR CONSTRUCTION CONTIGUOUS TO THE IMMEDIATE SITE AS DEFINED IN THE SCOPE OF WORK, SHALL BE RETURNED TO THEIR ORIGINAL CONDITION INCLUDING, BUT NOT LIMITED TO, GRASS, ASPHALT, CONCRETE SIDEWALKS, CONCRETE CURBS, CONCRETE CURB GUTTERS, CONCRETE STRUCTURES, CONCRETE FOUNDATIONS/FOOTINGS, EARTH WITH LANDSCAPING, EARTH WITH ROCKS AND EARTH.
16. THE CONTRACTOR SHALL VERIFY ALL EXISTING INSTALLATIONS IN THE FIELD PRIOR TO DEMOLITION WORK. NOTIFY THE CONTRACTING OFFICER OF ANY DISCREPANCIES PRIOR TO START OF DEMOLITION WORK.
17. REMOVE, STORE AND REINSTALL ALL ELECTRICAL WORK INDICATED TO BE RELOCATED. ALL OTHER ELECTRICAL WORK SHALL REMAIN INTACT, U.O.N. AVOID DAMAGE TO ALL (E) POWER, COMMUNICATIONS OUTLETS & LIGHT FIXTURES, ETC.
18. MAINTAIN BUILDING POWER, TELECOMMUNICATIONS, PLUMBING, HVAC, SECURITY, FIRE ALARM, AND FIRE PROTECTION SYSTEMS OPERATIONAL AT ALL TIMES.
19. EXTREME CARE SHALL BE TAKEN TO PREVENT ANY DISRUPTION OF COMMUNICATION NETWORK WIRING RUNNING THRU DEMO/CONSTRUCTION ZONES.

CODES AND STANDARDS

NOTE:
ALL WORK SHALL BE IN ACCORDANCE WITH THE LATEST EDITION OF THE CODES LISTED IN APD 8829.1 INCLUDING BUT NOT LIMITED TO THE FOLLOWING:

ASME B31.3 PROCESS PIPING CODE
AWWA C651-99 (STANDARD FOR DISINFECTING WATER MAINS)
CALIFORNIA BUILDING CODE (CBC)
CALIFORNIA PLUMBING CODE (CPC)
CALIFORNIA FIRE CODE (CFC)
CALIFORNIA MECHANICAL CODE (CMC)
CALIFORNIA ELECTRICAL CODE (CEC)
TITLE-24 CALIFORNIA STATE BUILDING CODE ACCESSIBILITY STANDARDS
UNIFORM FEDERAL ACCESSIBILITY STANDARDS (UFAS)
SHEET METAL AND AIR CONDITIONING CONTRACTORS NATIONAL ASSOCIATION (SMACNA)
NATIONAL FIRE PROTECTION ASSOC. STANDARD FOR THE INSTALLATION OF SPRINKLER SYSTEMS, NFPA 13
NATIONAL FIRE PROTECTION ASSOC. NATIONAL FIRE ALARM CODE, NFPA 72
NATIONAL FIRE PROTECTION ASSOC. LIFE SAFETY CODE, NFPA 101
NATIONAL FIRE PROTECTION ASSOC. STANDARD FOR FIRE DOORS AND WINDOWS, NFPA 80
NATIONAL FIRE PROTECTION ASSOC. STANDARD ON WATER MIST FIRE PROTECTION SYSTEMS, NFPA 750
NATIONAL FIRE PROTECTION ASSOC. STANDARD ON CLEAN AGENT FIRE EXTINGUISHING SYSTEMS, NFPA 2001
NATIONAL FIRE PROTECTION ASSOC. UNIFORM FIRE CODE, NFPA 1

HEALTH, SAFETY AND ENVIRONMENTAL REQUIREMENTS

1. ALL WORK SHALL BE PERFORMED IN STRICT ACCORDANCE WITH THE REQUIREMENTS OF CAL-OSHA, FED-OSHA, CAL-EPA, FED-EPA, SANTA CLARA COUNTY, THE BAAQMD (BAY AREA AIR QUALITY MANAGMENT DISTRICT), THE RWQCB (REGIONAL WATER QUALITY CONTROL BOARD) AND THE SWPPP (STORM WATER POLLUTION PREVENTION PLAN). IN ADDITION, ALL WORK ON AMES RESEARCH CENTER PROPERTY SHALL COMPLY WITH THE PROVISIONS OF THE AMES HEALTH AND SAFETY MANUAL (APR 1700.1) AND THE AMES ENVIRONMENTAL MANAGEMENT HANDBOOK (APR 8800.3). BOTH DOCUMENTS ARE AVAILABLE ON-LINE AT:
"http://servermpo.arc.nasa.gov/services/proc/procdocs/APG1700.1R/redactedhealthmanu l.html"
AND
"http://servermpo.arc.nasa.gov/services/proc/procdocs/APG8800.3R/redactedenvironmanual.html".
2. FOR PROTECTION OF NASA STAFF AND THE PUBLIC VISITING ADJACENT FACILITIES, THE CONTRACTOR SHALL ERECT REQUIRED PROTECTIVE BARRICADES, SHIELDS AND WALLS TO PROVIDE SAFE ACCESS TO THESE FACILITIES. THE CONTRACTOR SHALL BE RESONSIBLE FOR PROVIDING SECURITY AND CONTROLLED ACCESS INTO THE WORK SITE.
3. CONCRETE AND PAINT ARE DESIGNATED ITEMS IN THE COMPREHENSIVE PROCUREMENT GUIDELINE (CPG). THESE PRODUCTS MUST BE PURCHASED WITH THE HIGHEST RECOVERED (RECYCLED) CONTENT LEVEL PRACTICABLE. IF THEY CANNOT BE PURCHASED WITH THE REQUIRED RECOVERED MATERIAL CONTENT, THEN A WAIVER FORM MUST BE FILED THROUGH CODE QE. INFORMATION ABOUT THE CPG PRODUCTS CAN BE FOUND AT www.epa.gov/cpg. THE WAIVER FORM CAN BE FOUND AT http://q.arc.nasa.gov/qe/p2/.
4. USE ENERGY EFFICIENT PRODUCTS, SPECIFICALLY PRODUCTS ENDORSED BY EPA'S ENERGY STAR PROGRAM AT http://www/energystar.gov/products/. STRIVE TO CONSERVE ENERGY.
5. THE CONTRACTOR IS TO VERIFY AND INSURE THAT FUNDAMENTAL BUILDING AND FACILITY ELEMENTS AND SYSTEMS ARE INSTALLED, CALIBRATED AND OPERATING AS INTENDED IN ORDER THAT THEY CAN DELIVER FUNCTIONAL AND EFFICIENT PERFORMANCE.
6. FOR ALL PAINTS USED IN THE PROJECT, THE VOC'S (VOLATILE ORGANIC COMPOUNDS) SHALL MEET THE AIR DISTRICT (BAAQMD) LIMITS. THE LIMITS FOR ARCHITECTURAL COATINGS ARE 100 GRAMS PER LITER FOR FLAT COATINGS, 150 GRAMS PER LITER FOR NON-FLAT COATINGS & 250 GRAMS PER LITER FOR NON-FLAT HIGH GLOSS COATINGS. MSDS'S CAN BE SENT TO QE FOR PRE-APPROVAL. UPON COMPLETION OF THE PROJECT, THE MSDS'S OF THE PAINTS SHALL BE SENT TO QE FOR COMPLIANCE DOCUMENTATION.
7. A NEPA CHECKLIST HAS BEEN SUBMITTED FOR THIS PROJECT.
8. HAZMAT STORAGE: PROVIDE SECURITY TO PREVENT UNAUTHORIZED ENTRY AND SAFEGUARDDS FOR AL HAZARDOUS MATERIALS STORAGE AREA OUTSIDE THE SECURE AMES SITE (I.E., CHEMICAL STORAGE LOCKERS, GAS CYLINDER STORAGE AREA, ABOVEGROUND DIESEL FUEL TANK FOR EMERGENCY POWER GENERATOR).
9. ANY NEW LANDSCAPE PLANTING SHALL USE NATIVE, LOW MAINTENANCE, DROUGHT-TOLERANT SPECIES. CONTACT QE FOR LIST OF ACCEPTABLE SPECIES.
10. PER THE INDUSTRIAL STORM PERMIT THE CONCRETE WORK AND OTHER CONSTRUCTION ACTIVITY ARE COVERED BY A STORM WATER BEST MANAGEMENT PRACTICE. CONCRETE CUTTING AND WASH WATER IS NOT AN ALLOWABLE DISCHARGE TO THE STORM DRAIN SYSTEM. THE CONTRACTOR IS RESPONSIBLE FOR OBTAINING AND FOLLOWING THE CONSTRUCTION, DEMOLITION AND EXCAVATION OPERATIONS BEST MANAGEMENT PRACTICES (BMP) DOCUMENT.
11. THE CONTRACTOR MUST ADHERE TO THE NASA AMES ASBESTOS AND LEAD MANAGEMENT PLANS AND FEDERAL, STATE AND LOCAL REQUIREMENTS FOR REMOVAL AND DISPOSAL OF MATERIALS CONTAINING ASBESTOS AND/OR LEAD. ALL ITEMS BEING DEMOLISHED ARE ASSUMED TO CONTAIN ASBESTOS/LEAD UNLESS SAMPLING INDICATES OTHERWISE. SEE SPECIFICATION SECTIONS AND AMES HEALTH & SAFETY MANUAL - APG 1700.1, CHAPTERS 30 AND 35. HAZARDOUS MATERIALS INCLUDE BUT ARE NOT NECESSARILY LIMITED TO THE FOLLOWING:
   - ASSUME DETECTABLE AMOUNTS OF LEAD IN ALL PAINTED SURFACES.
   - ASSUME THAT SOME OF THE CONDUITS BEING REMOVE CONTAIN LEAD CABLING.
   - ASSUME ALL GYPSUM WALLBOARD ASSEMBLIES CONTAIN ASBESTOS.
   - ASSUME EXISTING PIPING INSULATION IS KNOWN TO CONTAIN ASBESTOS.
   - ASSUME THAT EXISTING PLASTER AT WALLS/CEILING CONTAIN ASBESTOS.
   - OSHA REQUIRES THAT FUMES FROM ALL INDOOR WELDING OR CUTTING BE EXHAUSTED TO THE OUTSIDE WITH LOCALIZED EXHAUST VENTILATION AND LEAD PAINT MUST BE REMOVED AT LEAST SIX INCHES AROUND WELD. HOT WORK PERMIT MUST BE INITIATED PRIOR TO WELD.
12. ASBESTOS MAY BE ENCOUNTERED IN SOME BUILDING MATERIALS SUCH AS ROOFING, SIDING, MASTICS, GASKETING, PIPE INSULATION, CABLE INSULATION, ETC.
13. ABATE ASBESTOS PER SPECIFICATIONS, REFER TO DRAWINGS FOR LISTING OF ASBESTOS CONTAINING MATERIALS. ABATE ARCHITECTURAL, MECHANICAL, STRUCTURAL AND ELECTRICAL WORK SHOWN TO BE DEMOLISHED OR AFFECTED BY THE WORK.
14. ABATE LEAD PAINT PER SPECIFICATIONS. REFER TO DRAWINGS FOR LISTING OF LEAD PAINT CONTAINING MATERIALS. ABATE ON ARCHITECTURAL, MECHANICAL, STRUCTURAL AND ELECTRICAL WORK SHOWN TO BE DEMOLISHED OR AFFECTED BY THE WORK.
15. FOR SURFACES AND MATERIALS, SURFACES (PIPING, STEEL STRUCTURE, CABLES AND COMPONENTS) CONTAINING LEAD OR LEAD BASED PAINT, THE NASA LEAD MANAGEMENT PLAN AND ALL FEDERAL, STATE AND LOCAL REGULATIONS PERTAINING TO THE HANDLING, DISTURBANCE, STORAGE AND DISPOSAL OF LEAD MUST BE ADHERED TO.
16. THE CONTRACTOR'S PROCEDURES FOR PROTECTING PERSONNEL SHALL BE ADDRESSED IN THE SUBMITTED AND APPROVED PROJECT SAFETY PLAN. PROCEDURES FOR DEMOLISHING, HANDLING, STORING, AND DISPOSING OF HAZARDOUS MATERIAL SHALL BE ADDRESSED IN THE SUBMITTED AND APPROVED WORK PLAN.
17. NASA IS THE GENERATOR FOR ALL HAZARDOUS WASTE TO BE DISPOSED OF ON THIS PROJECT. WHERE FEASIBLE, THE CONTRACTOR SHALL MINIMIZE HAZARDOUS WASTE DEBRIS THROUGH RECLAMATION AND/OR RECYCLING TECHNIQUES.
18. ALL EXCAVATED SOIL ON THIS PROJECT IS CONSIDERED UNSATISFACTORY FOR FILL AND BACKFILL. THE EXISTING SOIL AT THE PROJECT SITE MAY BE CONTAMINATED WITH PETROLEUM PRODUCTS. THE CONTRACTOR SHALL NOTIFY THE CONTRACTING OFFICER IMMEDIATELY WHEN SUSPECTED CONTAMINATED SOIL IS ENCOUNTERED. THE GOVERNMENT WILL TEST THE EXCAVATED SOIL FOR CONTAMINATION AS NOTED IN THE CONTRACT SPECIFICATIONS. IF THE SOIL IS FOUND TO BE CONTAMINATED, THE CONTRACTOR SHALL TRANSPORT IT TO THE SOIL REMEDIATION AREA APPROXIMATELY 2 MILES FROM THE PROJECT SITE. THE ROUTE BETWEEN THE PROJECT SITE AND THE SOIL REMEDIATION AREA IS ENTIRELY ON GOVERNMENT PROPERTY, THE CONTRACTOR'S VEHICLES MAY NOT TRAVEL ON PUBLIC ROADS. NO SPECIAL PERMITS OR LICENSES ARE REQUIRED TO TRANSPORT OR DUMP THIS SOIL. NON-CONTAMINATED CLEAN SOIL SHALL BE TRANSPORTED BY THE CONTRACTOR TO A SITE AS DESIGNATED BY THE CONTRACTING OFFICER WITHIN 2 MILES OF THE EXCAVATION SITE. ALL WASTE MATERIALS, TRASH, DEBRIS, ASPHALT AND CONCRETE SHALL BE REMOVED FROM GOVERNMENT PROPERTY AND LEGALLY DISPOSED OF BY THE CONTRACTOR. THE EXCAVATION OR TRENCHING PERFORMED IN SUCH AREAS SHALL BE PERFORMED BY CONTRACTORS WHO MUST HAVE 40 HOURS OF HAZARDOUS WASTE OPERATIONS AND EMERGENCY RESPONSE (HAZWOPER) TRAINING ACCORDING TO THE REQUIREMENTS OF THE CODE OF FEDERAL REGULATIONS, TITLE 29, PART 1910.120.

REGISTERED PROFESSIONAL ENGINEER
JAMES T. McCUSKER
No. E013699
ELECTRICAL
STATE OF CALIFORNIA

GENERAL SYMBOLS

SYMBOL	DESCRIPTION
	EXISTING TO BE TO REMAIN
	NEW
	EXISTING TO BE DEMOLISHED
1	KEY NOTE NUMBER
1	EQUIPMENT ID NO.
	POINT OF CONNECTION
	POINT OF DISCONNECTION TO REMAIN
	PORTION TO BE REMOVED
1/A2	DETAIL OR NOTE REFERENCE SHEET WHERE DETAIL OR NOTE IS SHOWN DETAIL OR NOTE NUMBER
1 / E1 E2	DETAIL REFERENCE DETAIL NUMBER SHEET WHERE DETAIL IS SHOWN SHEET FROM WHICH DETAIL IS REFERENCED
A / E1 E2	SECTION OR ELEVATION SECTION OR ELEVATION IDENTIFICATION SHEET WHERE SECTION OR ELEVATION IS DRAWN SHEET FROM WHICH SECTION OR ELEVATION IS REFERENCED
A / E1 E5	PHOTOGRAPHIC VIEWPOINT PHOTOGRAPH IDENTIFICATION SHEET WHERE PHOTOGRAPH IS SHOWN SHEET FROM WHICH PHOTOGRAPH IS REFERENCED

QUALITY CONTROL

THE CONSTRUCTION INSPECTIONS LISTED ARE IN ADDITION TO THE INSPECTIONS REQUIRED BY CBC SECTION 108. SPECIALLY INSPECTED WORK THAT IS INSTALLED OR COVERED WITHOUT THE APPROVAL OF THE BUILDING OFFICIAL AND THE SPECIAL INSPECTOR, IS SUBJECT TO REMOVAL OR EXPOSURE.

1. IT IS THE RESPONSIBILITY OF THE GENERAL CONTRACTOR TO INFORM THE SPECIAL INSPECTOR, CONTINUOUS INSPECTOR, SPECIAL OBSERVER OR INSPECTION AGENCY AT LEAST 48 HOURS PRIOR TO PERFORMING ANY WORK THAT REQUIRES SPECIAL INSPECTION. DELINQUENT NOTIFICATION MAY REQUIRE DEMOLITION OF COVERING MATERIALS TO FACILITATE OBSERVATION.
2. SPECIAL INSPECTIONS:
   A) CONCRETE MIX.
   B) CONCRETE FORMWORK.
   C) CONCRETE REINFORCEMENT.
   D) HIGH STRENGTH BOLTING.
   E) STRUCTURAL WELDING.
   F) EMBEDDED PIPES AND CONDUIT.
3. CONTINUOUS INSPECTIONS:
   A) GRADING AND FILLING.
   B) FOUNDATIONS.
   C) SLABS.
   D) STRUCTURAL FRAMING.
   E) PREFABRICATION, ASSEMBLY AND ERECTION.
4. FINAL INSPECTION:
   A) CERTIFICATION.
5. CONTRACTOR SHALL SUBMIT TO THE CONTRACTING OFFICER A DETAILED LIST OF INSPECTION ITEMS INDICATING THE SCOPE OF TESTING AND INSPECTION, PRIOR TO BEGINNING CONSTRUCTION.

Approved for Construction
Moffett Field Permit Board
Chief Building Official
Permit No. 11P038

ZONE	LETTER	DESCRIPTION	DRAWN	DATE	APPRVD

REVISIONS

DRAWN P.ALDEN	DATE 9-22-11	
DESIGNED P.ALDEN	DATE 9-22-11	
CHECKED J.McCUSKER	DATE 9-21-11	
PROJMGR F.JONES	DATE 9.25.11	
REQUESTER D.TRAN	DATE 9.26.11	
R&QA	DATE	
SAFETY	DATE	
SUPERVISOR S.FRANKEL	DATE OCT 21 2011	
	DATE	

Ames Research Center
Moffett Field, California

RESTORATION OF ELECTRICAL DISTRIBUTION SYSTEM-HIGH VOLTAGE WP1
GENERAL

GENERAL PROJECT NOTES AND GENERAL SYMBOLS

SIZE D | CAGE CODE 25307 | A 1---1001-G4 REV
SCALE AS SHOWN | INDEX | SHEET 1 OF 1
FILE NAME: A1---1001-G004_1_RHV.DWG 9-21-11

60176753.0001

DWG: \\N213FSC\Proj\KEDS\60176753 (K10018)_KEDS - High Voltage\500 CAD\KEDS_-HV-WP1_Shared-WP1\G\Sheet\A1---1001-G004_1_RHV.dwg Version: 17.1s (LMS Tech) User: pdalen
DATE: Sep 20, 2011 - 5:21:37 pm

ELECTRICAL NOTES

1. THE COMPLETE ELECTRICAL INSTALLATION SHALL BE IN ACCORDANCE WITH THE CALIFORNIA ELECTRICAL CODE, 2007 AND NATIONAL ELECTRICAL SAFETY CODE (LATEST EDITION).
2. CONDUCTOR SIZES ARE AWG & KCMIL, U.O.N.
3. ALL ELECTRICAL ITEMS SHALL BE NEW U.O.N.
4. DARK OR HEAVY LINES INDICATE NEW WORK. LIGHT LINES DENOTE EXISTING CONDITIONS.
5. EXISTING CONDITIONS: THESE DRAWINGS SHOW EXISTING EQUIPMENT, MATERIAL, WIRING, ETC. BASED UPON THE BEST AVAILABLE INFORMATION. CONTRACTOR SHALL CONFIRM EXISTING CONDITIONS, WIRING, LOCATION OF EQUIPMENT, DIMENSIONS, ETC PRIOR TO STARTING ANY WORK OR ORDERING ANY MATERIAL. CONTRACTOR SHALL BE RESPONSIBLE FOR LOCATING EXISTING UNDERGROUND UTILITIES, CORRECTING DISCREPANCIES AND PROVIDING A COMPLETE PROPER OPERATING SYSTEM.
6. WHEN USED IN THESE DRAWINGS AND THE ACCOMPANYING SPECIFICATIONS THE FOLLOWING DEFINITIONS APPLY:

   FURNISH: CONTRACTOR TO SUPPLY AND DELIVER COMPLETE.

   INSTALL: CONTRACTOR TO PLACE, SECURE AND CONNECT AND TEST AS REQUIRED TO MAKE FULLY OPERATIONAL.

   PROVIDE: CONTRACTOR TO FURNISH AND INSTALL AS DEFINED ABOVE.
7. EXISTING EQUIPMENT AND/OR ELECTRICAL WIRING WHICH IS TO REMAIN, BUT HAS TO BE REMOVED TO FACILITATE THE INSTALLATION OF THE NEW EQUIPMENT SHALL BE RESTORED TO ITS ORIGINAL OPERATING CONDITION.
8. INSTALLATION OF ELECTRICAL EQUIPMENT, RACEWAYS, STRUCTURES AND FOUNDATIONS SHALL BE BASED UPON CRITERIA OF SEISMIC AND WIND OF CBC (CALIFORNIA BUILDING CODE) 2007 EDITION. STRUCTURAL CALCULATIONS AND DRAWINGS SHALL BE STAMPED BY A PROFESSIONAL CIVIL ENGINEER LICENSED BY THE STATE OF CALIFORNIA AND SHALL BE SUBMITTED TO 'COTR' PRIOR TO FABRICATION/CONSTRUCTION.
9. EXISTING CONDUCTORS REMOVED FROM SERVICE SHALL NOT BE USED FOR NEW WORK UNDER THIS CONTRACT, UNLESS OTHERWISE NOTED.
10. EXISTING CONDUIT RUNS REMAINING IN PLACE MAY BE UTILIZED FOR THE NEW WORK, PROVIDED THAT THE CONDUIT IS OF ADEQUATE SIZE PER NATIONAL ELECTRICAL CODE FOR THE NUMBER AND SIZE OF CONDUCTORS BEING INSTALLED. CONDUCTORS SHALL BE OF THE SAME VOLTAGE. CONTRACTOR SHALL PULL A HARD MANDREL THROUGH CONDUITS AND VERIFY THAT CABLES CAN BE PULLED SAFELY WITHOUT DAMAGE TO CABLE JACKET.
11. PROVIDE ENGRAVED NAMEPLATES ON ALL NEW AND AFFECTED EXISTING EQUIPMENT AND DEVICES INCLUDING PULL BOXES. NAMEPLATES SHALL BE SCREWED ON PHENOLIC TYPE WITH WHITE LETTERS ON BLACK BACKGROUND. THE NAMEPLATE SHALL BE OF APPROPRIATE SIZE WITH LETTER HEIGHTS PER SPECIFICATIONS DIVISION 26, AND SUBJECT TO APPROVAL BY THE CONTRACTING OFFICER.
12. ALL POWER SHUTDOWN SHALL BE SCHEDULED ON WEEKENDS OR HOLIDAYS OR WITH PRIOR WRITTEN APPROVAL BY THE CONTRACTING OFFICER.
13. THE CONTRACTOR SHALL REQUEST ALL BUILDING POWER OUTAGES AT LEAST TWENTY ONE (21) DAYS IN ADVANCE OF THE OUTAGES.
14. SUBSTATIONS N225B AND N225 ARE VITAL TO THE OPERATION OF NASA RESEARCH CENTER. SUBSTATION SHUTDOWN CAN ONLY BE ACCOMPLISHED ON WEEKENDS (5:00 PM FRIDAY TO 5:00 PM SUNDAY) OR ON HOLIDAYS (6:00 AM TO 5:00 PM ONLY). ALL SCHEDULED SHUTDOWNS SHALL BE REQUESTED AT LEAST TWENTY ONE (21) CALENDAR DAYS IN ADVANCE. THE CONTRACTOR SHALL TAKE THESE CONSTRAINTS INTO CONSIDERATION IN PREPARING AND SCHEDULING OF ALL CONSTRUCTION ACTIVITIES FOR THIS CONTRACT.
15. THE CONTRACTOR SHALL SUBMIT A UTILITY OUTAGE REQUEST AND EXPECTED LENGTH OF THE POWER INTERRUPTION TO THE CONTRACTING OFFICER FOR APPROVAL IN NO LESS THAN TWENTY ONE (21) CALENDAR DAYS PRIOR TO A REQUIRED UTILITY OUTAGE (ELECTRICAL, TELEPHONE). NO OUTAGE SHALL BE ACCOMPLISHED PRIOR TO THE RECEIPT OF APPROVAL. NASA SHALL PERFORM ALL SWITCHING 6900V AND ABOVE. THE CONTRACTOR SHALL PERFORM ALL SWITCHING BELOW 6900V. THE CONTRACTOR/NASA-AMES SHALL LOCK OUT AND RED TAG THE APPROPRIATE CIRCUIT BREAKER, SWITCH, ETC. THE RED TAG SHALL LIST THE CIRCUIT, THE TIME OF OUTAGE, THE INDIVIDUAL AND FIRM EFFECTING THE OUTAGE, THE EXPECTED TIME THE OUTAGE WILL BE TERMINATED, AND PHONE NUMBER TO CONTACT REGARDING THE OUTAGE. THE TAG SHALL ALSO WARN PEOPLE NOT TO RE-ENERGIZE THE CIRCUIT SYSTEM BECAUSE THE POTENTIAL DANGER TO PERSONNEL/EQUIPMENT. TIMES FOR THESE SHUTDOWNS ARE FROM 6:00 AM, SATURDAY MORNING TO 5:00 PM, SUNDAY AFTERNOON; AND FROM 6:00 AM TO 5:00 PM ON HOLIDAYS.
16. POWER DISRUPTION OVER 48 HOURS MAY CAUSE THE LOSS OF THE FIRE ALARM SYSTEM SERVICE. CONTRACTOR SHALL NOTIFY THE FIRE DEPARTMENT OF THE LOSS OF ALARMS IF THIS OCCURS.
17. CONTRACTOR SHALL STRICTLY FOLLOW ALL STANDARD SAFETY PRACTICES, PRECAUTIONS, AND REQUIREMENTS OF NASA-AMES RESEARCH CENTER FOR ALL WORK INSIDE AN ENCLOSED AND ENERGIZED 115kV SUBSTATION. REFER TO AMES HEALTH & SAFETY MANUAL APR 1700.1.
18. ALL WIRES SHALL BE TAGGED FOR IDENTIFICATION BEFORE DISCONNECTION.
19. REPLACEMENT OF OTHER UNDERGROUND MEDIUM VOLTAGE DISTRIBUTION LINES, MANHOLES AND VAULTS, BY ANOTHER CONTRACTOR, MAY BE SCHEDULED DURING THE CONSTRUCTION PERIOD OF THIS CONTRACT. ALL WORK IN THIS CONTRACT SHALL BE COORDINATED WITH THE CONTRACTING OFFICER TO AVOID CONFLICT OF ACTIVITIES WITH OTHER CONTRACTS IN PROGRESS.
20. REPAIR DAMAGES TO GALVANIZED STEEL MEMBERS USING ASTM A780 ZINC RICH PAINT. PAINT ALL NEW HOLES DRILLED ON EXISTING GALVANIZED STEEL MEMBERS. DO NOT HEAT SURFACES TO WHICH REPAIR PAINT HAS BEEN APPLIED.
21. FIRE PROOFING TAPE SHALL BE WRAPPED AROUND EACH CABLE BEING WORKED ON IN THE MANHOLE, STARTING AND FINISHING OF FIRE PROOFING SHALL BE DONE WITH APPROVED FIBERGLASS TAPE.
22. ALL CABLES SHALL BE SUPPORTED PROPERLY AND ROUTED NEATLY ALONG THE MANHOLE WALL.
23. ALL NEW SPARE CONDUITS SHALL BE PROVIDED WITH A 1/4" NYLON PULL ROPE PRIOR TO CAPPING. PROVIDE IDENTIFICATION LABELS AND TAG SPARE CONDUITS INDICATING ORIGIN AND DESTINATION AT BOTH ENDS.
24. NEW CONDUITS SHALL BE SEALED AND FIRE PROOFED AT ENTRIES TO MANHOLES/VAULTS.
25. ALL MV FEEDER CABLES SHALL HAVE PHASE IDENTIFICATION AND FEEDER TAGS IN MANHOLES.
26. CABLE AND WIRE USED SHALL MEET THE FOLLOWING:
    FOR SIZES #1 AND SMALLER, CABLES SHALL BE RATED FOR 60°C, MINIMUM.
    FOR SIZES #1/O AND LARGER, CABLES SHALL BE RATED FOR 75°C, MINIMUM.
27. ALL PENETRATIONS THROUGH FIRE RATED WALLS SHALL BE TOTALLY SEALED TO PREVENT THE SPREAD OF SMOKE, FIRE, TOXIC GASES, AND WATER THROUGH THE PENETRATION BEFORE, DURING AND AFTER A FIRE CONDITION. THE FIRE RATING OF THE SEALED PENETRATION SHALL BE AT LEAST THAT OF THE WALL INTO WHICH IT IS INSTALLED. THE SEAL SHALL PERMIT THE VIBRATION, EXPANSION AND/OR CONTRACTION OF THE CONDUIT PASSING THROUGH THE PENETRATION WITHOUT THE SEAL CRACKING OR CRUMBLING. CONFORM TO CEC, 2007.

ELECTRICAL NOTES (CONT'D)

28. PRIOR TO START OF WORK, CONTRACTOR SHALL SUBMIT A COMPREHENSIVE SAFETY PROGRAM TO THE CONTRACTING OFFICER FOR APPROVAL BY THE NASA SAFETY OFFICE. ALL SAFETY ITEMS WILL BE DISCUSSED AT THE PRE-CONSTRUCTION MEETING.
29. THE CONTRACTOR SHALL OBTAIN A VALID AIR QUALITY PERMIT FOR THE TEMPORARY POWER GENERATOR WHICH SHALL BE POSTED AT A VISIBLE LOCATION ON THE GENERATOR UNIT. ALL PERMIT CONDITIONS SHALL BE BE COMPLIED WITH AND RECORDS SHALL BE SENT TO THE NASA SAFETY OFFICE, CODE QE FOR COMPLIANCE DOCUMENTATION.
30. PROVIDE GROUND FAULT PROTECTION EQUIPMENT FOR EACH SERVICE, FEEDER AND BRANCH CIRCUIT BREAKER OR DISCONNECT RATED 1000A OR MORE ON SOLIDLY GROUNDED SYSTEM OF MORE THAN 150V TO GROUND (AT 480Y/277V) IN ACCORDANCE WITH CEC.
31. PROVIDE FIELD MARKINGS OF PROPER WARNING LABELS FOR ARC FLASH AND SHOCK HAZARD PROTECTION ON ALL SWITCHBOARDS, PANELBOARDS, INDUSTRIAL CONTROL PANELS AND MOTOR CONTROL CENTERS IN ACCORDANCE WITH CEC ARTICLE 110. WARNING LABELS SHALL CONFORM TO APPLICABLE PROVISIONS OF NFPA 70E AND ANSI Z535.4, AND SUBJECT TO APPROVAL BY THE CONTRACTING OFFICER.
32. PRIOR TO ENERGIZATION OF EQUIPMENT OR CIRCUITS, THE CONTRACTOR SHALL DEVELOP A TEST PROCEDURE AND SUBMIT IT TO THE CONTRACTING OFFICER FOR REVIEW AND APPROVAL. THE CONTRACTOR SHALL PERFORM A COMPLETE FUNCTIONAL TEST TO DEMONSTRATE TO THE CONTRACTING OFFICER THAT THE NEW INSTALLATION IS OPERATING AS INTENDED. ANY DEFECTS OR DEFICIENCIES IN THE MATERIALS OR INSTALLATION WORK SHALL BE CORRECTED IMMEDIATELY BY AND AT THE CONTRACTOR'S EXPENSE.
33. ALL PERSONNEL WORKING IN MANHOLES (MH) SHALL BE CERTIFIED IN ACCORDANCE WITH OSHA CONFINED SPACE REGULATION 29 CFR 1910.146 AND CAL OSHA CONFINED SPACE REGULATIONS CCR5156,5157,5158 AND 5159.
34. CERTIFICATION OF THE QUALIFICATIONS OF THE MEDIUM VOLTAGE (MV) CABLE SPLICER/TERMINATOR SHALL BE SUBMITTED TO THE CONTRACTING OFFICER. THE CERTIFICATION SHALL INCLUDE THE TRAINING AND EXPERIENCE OF THE INDIVIDUAL. THE CERTIFICATION SHALL INDICATE THAT THE INDIVIDUAL HAS HAD THREE OR MORE YEARS OF EXPERIENCE SPLICING AND TERMINATING MEDIUM VOLTAGE CABLES. ONCE A MV TERMINATION OR SPLICE HAS BEEN STARTED BY A WORKER, THE SAME PERSON SHALL COMPLETE THAT PARTICULAR SPLICE. EACH MV TERMINATION AND SPLICE SHALL BE STARTED AND COMPLETED IN ONE CONTINUOUS WORK PERIOD.
35. CONTRACTOR SHALL USE EXTREME CAUTION AND TAKE ALL NECESSARY SAFETY PRECAUTIONS WHEN WORKING IN THE MANHOLES. MULTIPLE SYSTEM VOLTAGES MAY EXIST IN THE MANHOLES AND CAN BE ANY COMBINATION OF THE FOLLOWING:
    13.8KV
    6.9KV
    480V
    208Y/120V
    480Y/277V
    COMM CIRCUITS
36. THE CONTRACTOR SHALL NOTIFY THE CONTRACTING OFFICER AT LEAST SEVEN (7) DAYS IN ADVANCE TO DEWATER EXISTING MANHOLES (MH).
37. WHEN WORKING IN MANHOLES, CONTRACTOR SHALL COMPLY WITH NOTE 33 & 34. CONTRACTOR SHALL ASSUME THAT ALL MANHOLES CONTAIN ASBESTOS OR LEAD MATERIALS. EXTREME CARE SHALL BE MADE WHEN REMOVING MATERIALS FROM MANHOLES.
38. THE CONTRACTOR SHALL PROVIDE CABLE RACK CHANNELS, ARMS AND INSULATORS TO SUPPORT NEW CABLES, SPLICES, AND DEADBREAK JUNCTIONS IF NECESSARY.
39. ALL NEW CONDUITS AND CONDUIT DUCT BANKS SHALL BE SLOPED DOWN IN THE DIRECTION OF THE EXISTING MANHOLES.

Approved for Construction
Moffett Field Permit Board
Chief Building Official
Permit No. 11P038

ZONE	LETTER	DESCRIPTION	DRAWN	DATE	APPRVD

REVISIONS

DRAWN N.NIZAMOVA	DATE 9/21/11
DESIGNED N.NIZAMOVA	DATE 9/21/11
CHECKED J.McCUSKER	DATE 9-21-11
PROJMGR F.JONES	DATE 9-23-11
REQUESTER D.TRAN	DATE 9/26/11
R&QA	DATE
SAFETY	DATE
SUPERVISOR S.FRANKEL	DATE OCT 21 2011
	DATE

REGISTERED PROFESSIONAL ENGINEER JAMES T. McCUSKER No. E013699 ELECTRICAL STATE OF CALIFORNIA

Ames Research Center
Moffett Field, California

RESTORATION OF ELECTRICAL DISTRIBUTION SYSTEM-HIGH VOLTAGE WP1
ELECTRICAL
ELECTRICAL NOTES, SYMBOLS AND ABBREVIATIONS

SIZE D | CAGE CODE 25307 | A1---1001-E1 | REV
SCALE | INDEX | SHEET 1 OF 3

FILE NAME: A1---1001-E001_1_R7.DWG 9-21-11

DWG NO. A1---1001-E1 SH. 1 REV

DWG: \\N213FS2\Proj\REDS\60176753 (K10018)_REDS - High Voltage\500 CAD\REDS_HV-WP1_Shared-WP1\E\Sheet\A1---1001-E001_1_RHV.dwg Version: 17.1s (LMS Tech) User: palden
DATE: Sep 20, 2011 - 5:21:42 pm

60176753.0001

GROUNDING SYMBOLS

- GROUND WIRE (COPPER) EXPOSED
- GROUND WIRE (COPPER) CONCEALED/EMBEDDED
- GROUND ROD
- GROUND WELL
- GROUND OR EXOTHERMIC WELD CONNECTION
- GROUND PAD
- GROUND OR BONDING CONNECTION
- GROUND PIGTAIL

POWER AND CONTROL SYMBOLS

- BRANCH CIRCUIT WIRING IN CONDUIT – CONCEALED, 3/4" CONDUIT WITH 2#12 & 1#12G
- SHORT CROSS LINES DENOTES NUMBER OF PHASE CONDUCTORS; LONG CROSS LINE DENOTE NEUTRAL CONDUCTOR AND LONG CROSS LINE W/TAIL END DENOTE GROUND CONDUCTOR. CONDUIT SIZE AS PER NEC
- B–1: DENOTES HOMERUN TO PANEL B, CIRCUIT 1, 3/4" C WITH 2 #12 & 1 #12G
- B–1,2,3: DENOTES HOMERUN TO PANEL B, CIRCUIT 1, 2, 3 WITH COMMON NEUTRAL CONDUCTOR AND GROUND CONDUCTOR. CONDUIT SIZE AS PER NEC
- #10: CONDUCTORS OTHER THAN #12 AS INDICATED CONDUIT SIZE AS PER NEC OR AS NOTED ON THE DRAWING
- EXPOSED CONDUIT.
- UNDERGROUND (OR CONCEALED) CONDUIT
- EXISTING UNDERGROUND (OR CONCEALED) CONDUIT
- CONDUIT STUBOUT
- CONDUIT TURNED UP
- CONDUIT TURNED DOWN
- EXPANSION FITTING
- FLEXIBLE CONDUIT
- J: JUNCTION BOX
- PB: PULLBOX
- H: HANDHOLE
- MH E60: MANHOLE (EXISTING), "E60" INDICATES MH #
- NEW DUCT BANK.
- EXISTING DUCT BANK. ○ – INDICATES EMPTY CONDUIT ⊗ – INDICATES CONDUIT IN USE.
- TRANSFORMER
- SW467: SF6 SWITCH WITH NEW CONDUIT BANK, '467' INDICATES SW #.

ONE LINE DIAGRAM SYMBOLS

- DRAWOUT TYPE MEDIUM VOLTAGE CIRCUIT BREAKER
- GFP: DRAWOUT TYPE LOW VOLTAGE CIRCUIT BREAKER W/ GFP– GROUND FAULT PROTECTION (OR AS NOTED)
- SF6: SF6 CIRCUIT BREAKER
- GFCI, 100AF 100AT: MOLDED CASE CIRCUIT BREAKER FRAME AND TRIP UNIT AS NOTED, 3–POLE UNLESS OTHERWISE NOTED. ST– SHUNT TRIP; GFCI– GROUND FAULT CIRCUIT INTERRUPTER; AF– FRAME AMPS; AT– TRIP AMPS
- 600A / 200A: MANUAL INTERRUPTING SWITCH, 3POLE, 600A RATING AND 200A FUSE SIZE
- 400AF 800AT, E, LT ST SS GF I: AIR CIRCUIT BREAKER, ELECTRICALLY OPERATED WITH SOLID STATE TRIP; LT–LONG TIME; ST–SHORT TIME; GF–GROUND FAULT; I–INSTANTANEOUS
- DRAWOUT DEVICE
- DEADBREAK JUNCTION
- THERMAL OVERLOAD
- MO, M: DISCONNECT SWITCH, MOTOR OPERATED
- CENTER, SIDE BREAK SWITCH
- 600A: HV SWITCH, FUSED, CUTOUT, ABOVE 600V, AMP RATING AS INDICATED
- TRANSFORMER
- POWER TRANSFORMER THREE WINDING
- 2: POTENTIAL TRANSFORMER NUMBER INDICATES QUANTITY
- 1200/5 MR, 600/5 T, 3: CURRENT TRANSFORMER, BUSHING TYPE, MULTI–RATIO (MR), PRIMARY/SECONDARY CURRENT RATED, NUMBER INDICATES QUANTITY, "T" INDOCATES TAP SETTING
- LIGHT SENSOR
- TRIP CIRCUIT
- A4: KEY INTERLOCK UNIT. A4 – UNIT TAG.
- VACUUM INTERRUPTER OR VACUUM SWITCH

ELECTRICAL SYMBOLS

- 1200/5 MR, 800/5 T, 3: CURRENT TRANSFORMER, PRIMARY/SECONDARY CURRENT INDICATED. NUMBER INDICATES QUANTITY; MR–MULTI RATIO INDICATES MAXIMUM RATIO SETTING; 'T'–TAP INDICATES REQUIRED TAP SETTINGS
- 50/5, 1: CURRENT TRANSFORMER, ZERO SEQUENCE
- THREE PHASE, 3W, OPEN DELTA CONNECTION
- THREE PHASE, OPEN DELTA, GROUNDED AT COMMON POINT.
- GROUND CONNECTION
- 3 L.A.: LIGHTNING ARRESTOR NUMBER INDICATES QUANTITY
- SA: SURGE ARRESTOR
- EXISTING HV CABLE TERMINATION
- NEW HV CABLE TERMINATION
- SEPARABLE ELBOW TERMINATION
- AM: AM–AMMETER; AMR–AMMETER RECODER; AS–AMMETER SWITCH; EDM–ELECTRONIC DISPLAY METER; MO–MOTOR OPERATED; PF–POWER FACTOR; ST–SHUNT TRIP; WTD–WATT TRANSDUCER; WHM–WATT HOUR METER; VM–VOLT METER; VS–VOLT METER SWITCH
- OR: PROTECTIVE RELAY (COIL) MICROPROCESSOR BASED ELECTRONIC DEVICE/RELAY. FOR ADDITIONAL DEVICES, SEE ANSI C37.2; 50–INSTANTANEOUS OVERCURRENT RELAY; 50G–INSTANTANEOUS GROUND OVERCURRENT RELAY; 50GS–INSTANTANEOUS OVERCURRENT RELAY, ZERO SEQUENCE; 50N–INSTANTANEOUS NEUTRAL OVERCURRENT RELAY; 51–AC TIME OVERCURRENT RELAY; 51N–NEUTRAL TIME OVERCURRENT RELAY; 51G–GROUND TIME OVERCURRENT RELAY; 51GS ZERO SEQUENCE TIME OVERCURRRRENT RELAY TIME UNIT; 52–AC CIRCUIT BREAKER; 67–AC DIRECTIONAL OVERCURRENT RELAY; 32–DIRECTIONAL POWER RELAY; 86T–TRANSFORMER LOCK OUT RELAY; 86–LOCK OUT RELAY; 87–DIFFERENTIAL CURRRENT RELAY (WITH SUFFIX M,T,B,G FOR MOTOR, XFMR, BUS OR GENERATOR RESPECTIVELY)
- 50/51, 50N/51N, OR, 50/51
- AFD: MICROPROCESSOR BASED ARC FLASH DETECTOR
- 60A: FUSE, RATING AS NOTED
- RES 4800: RESISTOR, OHMS AS INDICATED
- TS: TEST BLOCK OR TEST SWITCH
- BUS DUCT (RATING AS INDICATED ON DRAWING)
- I, OR, I: INTERLOCK
- K, OR, K: KEY INTERLOCK
- HP: MOTOR 3 PHASE, HORSE POWER AS INDICATED
- OR: CROSS WIRING (NOT CONNECTED)
- CROSS WIRING CONNECTION
- RESIDUAL CONNECTION
- CONNECTION FOR RESIDUAL GROUND RELAY
- NORMALLY OPEN CONTACT
- NORMALLY CLOSED CONTACT
- TRIPPING INFLUENCE LINE

ELECTRICAL SYMBOLS (CONT'D)

- DELTA CONNECTION
- "Y" OR STAR CONNECTION WITH GROUNDED NEUTRAL
- G: GREEN INDICATING LIGHT
- R: RED INDICATING LIGHT
- W: WHITE INDICATING LIGHT
- OR: EXISTING CABLE SPLICE
- CABLE TERMINATION/SPLICE POINT
- OR: NEW CABLE SPLICE
- TERMINAL BLOCK
- TERMINAL POINTS
- PANEL
- WELDING RECEPTACLE
- 600A: LOAD BREAK SWITCH, 600A RATED
- SS: UPS STATIC SWITCH
- UPS CHARGER
- UPS INVERTER
- UPS BATTERY UNIT
- GFP: GROUND FAULT PROTECTION
- ST: SHUNT TRIP
- 1: MOTOR CONTROLLER OR STARTER 1– DENOTES STARTER NEMA SIZE
- DISCONNECT SWITCH
- AB1: CABLE NO. OR EQUIPMENT NO.
- 11/AB1: WIRE NO./CABLE NO.
- G1: DRAWING MATCH CIRCLE

Approved for Construction
Moffett Field Permit Board
Chief Building Official
Permit No. 11P038

ZONE	LETTER	DESCRIPTION	DRAWN	DATE	APPRVD

REVISIONS

DRAWN N.NIZAMOVA	DATE 9/21/11	
DESIGNED N.NIZAMOVA	DATE 9/21/11	
CHECKED J.McCUSKER	DATE 9-21-11	
PROJMGR F.JONES	DATE 9:23:11	
REQUESTER D.TRAN	DATE 9/22/11	
R&QA	DATE	
SAFETY	DATE	
SUPERVISOR S.FRANKEL	DATE OCT 24 2011	

REGISTERED PROFESSIONAL ENGINEER JAMES T. McCUSKER No. EE13599 ELECTRICAL STATE OF CALIFORNIA

Ames Research Center
Moffett Field, California

RESTORATION OF ELECTRICAL DISTRIBUTION SYSTEM–HIGH VOLTAGE WP1

ELECTRICAL

ELECTRICAL NOTES, SYMBOLS AND ABBREVIATIONS

SIZE	CAGE CODE	REV
D	25307	A
SCALE	INDEX SHEET 2 OF 3	

A1---1001-E1

FILE NAME: A1---1001-E001_2_R7.DWG 9-21-11

60176753.0001

DWG: \\N21FS2\Proj\RE2DS\60176753 (K10018)_RE2DS - High Voltage\500 CAD\RE2DS_HV-WP1_Stored-WP1\[\Sheet\A1---1001-E001_2_RHV.dwg Version: 17.1s (LMS Tech) User: polden
DATE: Sep 20, 2011 - 5:46:49 pm

ABBREVIATIONS

A	AMPERE
AA	ALL ALUMINUM
AA/FA	AIR AIR/FORCED AIR
ACB	AIR CIRCUIT BREAKER
A/C	AIR CONDITIONING
AC	ALTERNATING CURRENT
ADS	AIR DISCONNECT SWITCH
AF	AMPERE FRAME OR FUSE SETTING
AFD	ARC FLASH DETECTOR
AFF	ABOVE FINISHED FLOOR
AHU	AIR HANDLING UNIT
AL	ALUMINUM
ALTC	AUTOMATIC LOAD TAP CHANGER
AM	AMMETER
AMP	AMPERE
AMR	AMMETER RECORDER
ANN	ANNUNCIATOR
APMS	AMES POWER MONITORING SYSTEM
APPROX	APPROXIMATELY
ARF	ABOVE RAISED FLOOR
AS	AMMETER SWITCH
ASTM	AMERICAN SOCIETY FOR TESTING AND MATERIALS
ASW	AIR SWITCH
AT	AMPERE TRIP OR FUSE SETTING
ATS	AUTOMATIC TRANSFER SWITCH
AUX	AUXILIARY
AWG	AMERICAN WIRE GAUGE
B	BELL
BATT	BATTERY
BCS	BREAKER CONTROL SWITCH
BCW	BARE COPPER WIRE
BIL	BASIC INSULATION LEVEL
BLDG	BUILDING
BKR	BREAKER
BOC	BOTTOM OF CONDUIT
BOD	BOTTOM OF DUCT
BOT	BOTTOM OF TRAY
BPSP	BY-PASS SWITCH PANEL
BRN	BUS REFERENCE NUMBER
C	CONDUIT
CAB	CABINET
CAP	CAPACITOR
CB	CIRCUIT BREAKER
CB'S	CIRCUIT BREAKERS
CCTV	CLOSED-CIRCUIT TELEVISION
CEC	CALIFORNIA ELECTRICAL CODE
CES	CABLE ENTRY SIDE
CIR/CKT	CIRCUIT
CLF	CURRENT LIMITING FUSE
CLG	CEILING
CLIP	CURRENT LIMITING PROTECTOR
CLR	CLEAR
CMD	CIRCUIT MONITOR DEVICE
CMPT	COMPARTMENT
CNTL	CONTROL
CO	CONDUIT ONLY
COL	COLUMN
CONC	CONCRETE
CONT'D	CONTINUED
CONT'N	CONTINUATION
CPT	CONTROL POWER TRANSFORMER
CRS	COATED RIGID STEEL
CS	CONTROL SWITCH
CT	CURRENT TRANSFORMER
CT-MCC	CONTROL TOWER-MOTOR CONTROL CENTER
CTB	CONTROL TEST BLOCK
CTD	CAPACITOR TRIP DEVICE
CTF	CONTROLS TRANSFORMER
CU	COPPER
CUB	CUBICLE
DB	DUCT BANK
DC	DIRECT CURRENT
DE	DEAD END
DEMO	DEMOLITION
DET	DETAIL
DEV	DEVICE
DI	DIGITAL INPUT
DIA	DIAMETER
DISC	DISCONNECT
DIST, DISTRIB	DISTRIBUTION
DIV	DIVISION
DLM	DIGITAL LINE METERING DEVICE
DN	DOWN
DO	DRAW-OUT TYPE, DIGITAL OUTPUT
DS	DISCONNECT SWITCH
DSD	DUCT SMOKE DETECTOR
DWG	DRAWING

ABBREVIATIONS (CON'T)

E	ELECTRICALLY OPERATED CIRCUIT BREAKER
EA	EACH
(E), EXIST	EXISTING
EDM	ELECTRONIC DISPLAY METER
EF	EXHAUST FAN
EG	ENGINE GENERATOR
ELEC	ELECTRIC(AL)
ELEV	ELEVATION
EMT	ELECTRICAL METALLIC TUBING
ENT	ELECTRICAL NONMETALLIC TUBING
E.O.L.	END OF LINE
EPO	EMERGENCY POWER OFF
EPOCP	EMERGENCY POWER OFF CONTROL PANEL
EPOCS	EMERGENCY POWER OFF CONTROL SYSTEM
EPO/ST-TP1	EMERGENCY POWER / SHUNT TRIP- TERMINAL PANEL 1
EPR	ETHYLENE PROPYLENE RUBBER
EQ	EQUAL
(ER)	EXISTING TO BE RELOCATED
EQUIP	EQUIPMENT
ETLP	EMERGENCY TIE LINE PANEL
ETM	ELAPSED TIME METER
EXH	EXHAUST
FA	FIRE ALARM
FACP	FIRE ALARM CONROL PANEL
FBO	FURNISHED BY OTHER
FCU	FAN COIL UNIT
FDR	FEEDER
FIN	FINISH
FIXT	FIXTURE
FLA	FULL LOAD AMPERES
FLR	FLOOR
FLEX	FLEXIBLE
FMCS	FACILITIES MONITORING & CONTROL SYSTEM
FOS	FRONT OF SWITCH
FU	FUSE
F, FUT	FUTURE
FVNR	FULL VOLTAGE NONREVERSING
FVR	FULL VOLTAGE REVERSING
GN	GREEN
G, GND, GRD	GROUND(ED)
GA	GAUGE
GEC	GROUND ELECTRODE CONDUCTOR
GEN	GENERATOR
GF	GROUND FAULT
GFCI	GROUND FAULT CIRCUIT INTERRUPTER
GFE	GOVERNMENT FURNISHED EQUIPMENT
GFI	GROUND FAULT INTERRUPTER
GFP	GROUND FAULT PROTECTION
GS	GROUND SENSOR
HAZMAT	HAZARDOUS MATERIAL
H1, H2	MV TERMINALS
HOA	HAND OFF AUTO
HP	HORSE POWER
HR	HOUR
HTR	HEATER
HSE	HOUSE
HV	HIGH VOLTAGE
HVAC	HEATING, VENTILATING & AIR CONDITIONING
HZ	HERTZ
IC	INTERRUPTING CURRENT
INSTRT	INSTRUMENT
IPS	INTERNATIONAL PIPE STANDARD
ISC	SHORT CIRCUIT CURRENT
JB	JUNCTION BOX
KA	KILO AMPERE
KAIC	KILO AMPERE INTERRUPTING RATING
kCMIL	KILO CIRCULAR MILS
KN	KEY NOTE
kV	KILOVOLT
kVA	KILOVOLT AMPERE
KVARH	KILO VAR-HOUR
kW	KILOWATT
kWH	KILO WATT-HOUR
LA	LIGHTNING ARRESTOR
LAB	LABORATORY
LAN	LOCAL AREA NETWORK
LB	POUND
LC	LIGHTING CONTACTOR
L/C	LOCK CLOSED (INTERLOCK)
L/O	LOCK OPEN (INTERLOCK)
LFMC	LIQUID-TIGHT FLEXIBLE METAL CONDUIT
LTC	LOAD TAP CHANGER
LT(G)	LIGHT(ING)
LHS	LEFT HAND SIDE
LTSW	LIGHT SWITCH
LV	LOW VOLTAGE

ABBREVIATIONS (CON'T)

M	METER
mA	MILLI AMPERES
MBER	MICROPROCESSOR BASED ELECTRONIC RELAY
MBG	MAIN BUILDING GROUND
MCB	MAIN CIRCUIT BREAKER
MCC	MOTOR CONTROL CENTER
MCCB	MOLDED CASE CIRCUIT BREAKER
MCG	MAIN COMPUTER GROUND
MCM	THOUSAND CIRCULAR MILS
MCP	MOTOR CIRCUIT PROTECTOR
MGDS	MOBILE GENERATOR DISCONNECT SWITCH
MFR	MANUFACTURER
MH	MANHOLE
MI	MECHANICAL INTERLOCK
MIN	MINIMUM
MLO	MAIN LUGS ONLY
mm	MILLIMETERS
MO	MOTOR OPERATED
MOB.	MOBILE
MPH	MILES PER HOUR
MR	MULTI RATIO
MRCT	MULTI-RATIO, CURRENT TRANSFORMER
MS	MOTOR STARTER
MTD	MOUNTED
MTG	MOUNTING
MV	MEDIUM VOLTAGE
MVA	MEGA VOLT-AMPERE
NASA	NATIONAL AERONAUTICS AND SPACE ADMINISTRATION
N, NEUT	NEUTRAL
N/A	NOT APPLICABLE
(N)	NEW
N.C.	NORMALLY CLOSED
NEC	NATIONAL ELECTRICAL CODE
NEIS	NATIONAL ELECTRICAL INSTALLATION STANDARD
NEMA	NATIONAL ELECTRICAL MANUFACTURER'S ASSOCIATION
NESC	NATIONAL ELECTRICAL SAFETY CODE
NFD	NON FUSED DISCONNECT SWITCH
N.I.C.	NOT IN CONTRACT
NO.	NUMBER
N.O.	NORMALLY OPEN
NTS	NOT TO SCALE
O.C.	ON CENTER
OA/FA, FFA	OIL AIR/FORCED AIR, FUTURE FORCED AIR
OCB	OIL CIRCUIT BREAKER
O/H	OVERHEAD
OL	OVERLOAD
OSHA	OCCUPATIONAL SAFETY & HEALTH ADMINISTRATION
OSW	OIL CUTOUT SWITCH
P	POLE
PB	PULLBOX
PBS	PUSH BUTTON STATION
PCB	POLYCHLORINATED BIPHENYL
PF	POWER FACTOR
PG&E	PACIFIC GAS AND ELECTRIC
PILC	PAPER INSULATED LEAD COVERED
PH, ø,	PHASE
PM	PRIMARY
PMD	POWER MONITOR DISPLAY
PNL	PANEL
POC	POINT OF CONNECTION
PPD	POWER PICK-UP DEVICE FOR METERING
PR	PAIR
PROT	PROTECTIVE
PRI	PRIMARY
PSF	POUNDS PER SQUARE FOOT
PSI	POUNDS PER SQUARE INCH
PT	POTENTIAL TRANSFORMER
PTB	POTENTIAL TEST BLOCK
PVC	POLYVINYL CHLORIDE
PWR	POWER
Q	QUANTITY
R	RED
(R)	RELOCATED
REC	RECORDING
RECPT, RCP	RECEPTACLE
REDS-V	RESTORATION OF ELECTRICAL DISTRIBUTION SYSTEM, PHASE-5
REF	REFERENCE
RES	RESISTOR
REQ	REQUIRED
RGC	RIGID GALVANIZED CONDUIT
RGS	RIGID GALVANIZED STEEL
RHS	RIGHT HAND SIDE
RLY	RELAY
RM	ROOM
RMS	ROOT MEAN SQUARE
RSC	RIGID STEEL CONDUIT
SA	SURGE ARRESTOR
SC	SHORT CIRCUIT
SCH	SCHEDULE
SERV	SERVICE
SEC	SECOND, SECONDARY
SEL	SCHWEITZER ENGINEERING LABS.

ABBREVIATIONS (CON'T)

SCTB	SHORT CIRCUITING TERMINAL BLOCK
SF	SUPPLY FAN
SF6	SULFUR-HEXAFLUORIDE
SH, SHT	SHEET
SIM	SIMILAR
SN	SHEET NOTE
SP	SPARE
SPEC	SPECIFICATION(S)
SPKR	SPEAKER
SQ	SQUARE
SS	STAINLESS STEEL
ST	SHUNT TRIP
STA	STATION
STD	STANDARD
SWBD	SWITCHBOARD
SWGR	SWITCHGEAR
SW	SWITCH
SYM	SYMMETRICAL, SYMBOL
SYS, SYST	SYSTEM
T	TERMINAL,TAP
T, XFMR,	TRANSFORMER
TB	TERMINAL BLOCK
TBD	TO BE DETERMINED OR DEVELOPED
TBL	TEST BLOCK
TDR	TIME DELAY RELAY
TEL	TELEPHONE
TEMP	TEMPERATURE
TJB	TERMINAL JUNCTION BOX
TP	TWISTED PAIR
TPS	TWISTED PAIR, SHIELDED CABLE
TS	TEST SWITCH
TWR	TOWER
TYP, (TYP)	TYPICAL
UBC	UNIFORM BUILDING CODE
U/G	UNDERGROUND
U.O.N.	UNLESS OTHERWISE NOTED
UPS	UNINTERRUPTIBLE POWER SUPPLY
UV	ULTRA VIOLET
V	VOLT(S)
VA	VOLTAMPERE
VCB	VACUUM CIRCUIT BREAKER
VCL	VARNISHED CAMBRIC LEAD
VDC	VOLTS DIRECT CURRENT
VM	VOLTMETER
VS	VOLTMETER SWITCH
VT	VOLTAGE TRANSFORMER
VTD	VOLTAGE TRANSDUCER
W	WATT, WIRE, WHITE
W/	WITH
WH	WATT HOUR
WHD	WATT HOUR DEMAND METER
WHM	WATT HOUR METER
WP	WEATHERPROOF
WP#2	WORK PACKAGE #2
W/O	WITHOUT
WTD	WATT TRANSDUCER
W.T.	WIND TUNNEL
XLPE	CROSS-LINKED POLYETHYLENE
XFMR	TRANSFORMER
X1...X4	LV TERMINALS
Y	WYE CONNECTED
Z	IMPEDANCE
ZSRG	ZERO SIGNAL REFERENCE GROUND

REGISTERED PROFESSIONAL ENGINEER
JAMES T. McCUSKER
No. E013699
ELECTRICAL
STATE OF CALIFORNIA

Approved for Construction
Moffett Field Permit Board
Chief Building Official
Permit No. 11P038

ZONE	LETTER	DESCRIPTION	DRAWN	DATE	APPRVD
		REVISIONS			

DRAWN N.NIZAMOVA	DATE 9/21/11	
DESIGNED N.NIZAMOVA	DATE 9/21/11	
CHECKED J.McCUSKER	DATE 9-21-11	
PROJMGR F.JONES	DATE 9.23.11	
REQUESTER D.TRAN	DATE 9/22/11	
R&QA	DATE	
SAFETY	DATE	
SUPERVISOR S.FRANKEL	DATE OCT 04 2011	
	DATE	

Ames Research Center
Moffett Field, California

RESTORATION OF ELECTRICAL DISTRIBUTION SYSTEM-HIGH VOLTAGE WP1
ELECTRICAL

ELECTRICAL NOTES, SYMBOLS AND ABBREVIATIONS

SIZE	CAGE CODE	DWG NO.	REV
D	25307	A1---1001-E1	
SCALE		INDEX	SHEET 3 OF 3

FILE NAME: A1---1001-E001_3_R7.DWG 9-21-11

60176753.0001

DWG: \\V213FS2\Proj\REDS\60176753 (K10018)_REDS - High Voltage\500 CAD\REDS_HV-WP1_Shared-WP1\E\Sheet\A1---1001-E001_3_RHV.dwg Version: 17.1s (LMS Tech) User: pdden
DATE: Sep 20, 2011 - 4:21:51 pm

8	7	6	5	4	3	2	DWG NO. A1---1001-S1	SH. 1	REV

STRUCTURAL GENERAL NOTES

1. ALL WORK SHALL BE IN ACCORDANCE WITH ALL FEDERAL, STATE AND LOCAL BUILDING CODES AND SAFETY ORDINANCES IN EFFECT AT THE TIME AND PLACE OF BUILDING.
2. ANY CONFLICTS OR DISCREPANCIES BETWEEN THE DRAWINGS AND SITE CONDITIONS SHALL BE IMMEDIATELY BROUGHT TO THE ATTENTION OF THE ENGINEER AND CORRECTED AS DIRECTED BY THE ENGINEER.
3. CONTRACTOR AGREES THAT HE SHALL ASSUME SOLE AND COMPLETE RESPONSIBILITY FOR JOB SITE CONDITIONS DURING THE COURSE OF CONSTRUCTION OF THIS PROJECT . INCLUDING SAFETY OF ALL PERSONS AND PROPERTY. THIS REQUIREMENT SHALL APPLY CONTINUOUSLY AND SHALL NOT BE LIMITED TO NORMAL WORKING HOURS.
4. NO PIPES OR SLEEVES SHALL PASS THROUGH STRUCTURAL MEMBERS WITHOUT APPROVAL OF CONTRACTING OFFICER UNLESS SHOWN ON STRUCTURAL DRAWINGS.
5. CONCRETE CONTRACTOR SHALL PROVIDE TEMPORARY SHORING AS REQUIRED TO INSURE VERTICAL & LATERAL STABILITY OF SOIL FOR FOUNDATION INCLUDING DUCTBANK AND PORTION THEREOF DURING CONSTRUCTION.
6. CONCRETE CONTRACTOR SHALL SUBMIT SHORING PLAN FOR REVIEW TO CONTRATING OFFICER 5 DAYS PRIOR TO EXCAVATION.
7. ALL DEBRIS AND WASTE GENERATED BY THIS PROJECT SHALL BE LEGALLY RECYCLED OR DISPOSED.
8. DIMENSION ARE REFERENCE ONLY. CONTRACTOR SHALL FIELD VERIFY ALL EXISTING SIZES, CONDITIONS, MEMBERS ELEVATIONS AND DIMENSIONS BEFORE BEGINNING CONSTRUCTION AND/OR ORDERING MATERIAL.

REINFORCEMENT STEEL

1. REINFORCING BARS SHALL BE IN ACCORDANCE WITH REQUIREMENTS OF ASTM A615, GRADE 60. DEFORMED BARS.

2. LAP SPLICE LENGTH SCHEDULE:

F'c = 3,000 PSI

	BASIC LAP	TOP BAR LAP*
#4	28 IN.	37 IN.
#5	36 IN.	46 IN.
#6	43 IN.	56 IN.
#7	62 IN.	81 IN.

* TOP BAR LAPS OCCUR IN HORIZONTAL BARS OF FOOTINGS, SLABS AND WALLS WHERE MORE THAN ONE FOOT OF WET CONCRETE IS PLACED BELOW THE GIVEN REINFORCEMENT BAR.

3. CONCRETE COVER:

UNLESS OTHERWISE NOTED, CONCRETE COVERAGE OF REINFORCING BARS SHALL BE AS FOLLOWS:

3" – ALL BARS WHERE CONCRETE IS DEPOSITED DIRECTLY AGAINST EARTH.

2" – FOR #6 AND LARGER BARS WHERE CONCRETE IS EXPOSED TO EARTH AND/OR WEATHER BUT DEPOSITED AGAINST FORMS.

1-1/2" – FOR #5 AND SMALLER BARS FOR SLABS, WALLS, BEAMS, COLUMNS AND EXTERIOR SURFACES EXPOSED TO EARTH OR WEATHER BUT DEPOSITED AGAINST FORMS.

4. ALL REINFORCING STEEL AND EMBEDMENTS TO BE HELD SECURELY IN PLACE PRIOR TO PLACING CONCRETE. PROVIDE SUFFICIENT SUPPORTS TO ALLOW WALKING ON REINFORCEMENT. NO BRICK OR POROUS MATERIAL SHALL BE USED TO SUPPORT REINFORCING.

STRUCTURAL ABBREVIATIONS

℄	CENTER LINE	MAX	MAXIMUM
A.B.	ANCHOR BOLT	MIN	MINIMUM
B.PL	BASE PLATE	(N)	NEW
BOT	BOTTOM	N.S.	NEAR SIDE
B.O.S	BOTTOM OF STEEL	N.T.S.	NOT TO SCALE
CLR	CLEAR	O.C.	ON CENTER
COL	COLUMN	OPNG	OPENING
CONT	CONTINUOUS	OPP	OPPOSITE
COTR	CONTRACTING OFFICER'S TECHNICAL REPRESENTATIVE	PL	PLATE
		PLCS.	PLACES
DET	DETAIL	PS	PIPE SUPPORT
DWL	DOWEL	REINF	REINFORCING
DWG	DRAWING	REQ'D	REQUIRED
(E)	EXISTING	SIM	SIMILAR
EA	EACH	SPEC	SPECIFICATION
E.F.	EACH FACE	SPC	SPACING
EMBED	EMBEDMENT	STL	STEEL
EQ	EQUAL	SYMM	SYMMETRICAL
E.W.	EACH WAY	T&B	TOP AND BOTTOM
F.S.	FAR SIDE	TBM	TEMPORARY BENCH MARK
F.F.	FINISH FLOOR	THK	THICK
FTG	FOOTING	T.O.	TOP OF
GA	GAUGE	T.O.F	TOP OF FOOTING
GALV	GALVANIZED	T.O.S	TOP OF STEEL
H.R.	HAND RAIL	T.O.C	TOP OF CONCRETE
HORIZ	HORIZONTAL	TYP	TYPICAL
HT	HEIGHT	U.N.O.	UNLESS NOTED OTHERWISE
ICC	INTERNATIONAL CODE COUNCIL	VERT	VERTICAL
LLH	LONG LEG HORIZONTAL	V.I.F.	VERIFY IN FIELD
LLV	LONG LEG VERTICAL	W.W.F.	WELDED WIRE FABRIC
		W.P.	WORK POINT

FOUNDATIONS

1. UNDERLYING BASE OF NATIVE SOIL SHALL BE COMPACTED TO AT LEAST 90 PERCENT OF THE MAXIMUM DRY DENSITY, FOR DEPTH OF AT LEAST 12" UNDER FOOTING PER ASTM D1557.
2. CONTRACTOR TO PROVIDE FOR DE-WATERING OF EXCAVATION FOR EITHER SURFACE WATER, GROUND WATER OR SEEPAGE IF REQUIRED.
3. NO CONCRETE SHALL BE POURED IN ANY FOUNDATION UNTIL EXCAVATION HAS BEEN INSPECTED AND APPROVED BY COTR.
4. FOUNDATION DESIGN IS BASED ON TABLE 1804.2 OF CALIFORNIA BUILDING CODE 2007, SOIL TYPE 4. ALLOWABLE SOIL PRESSURE:

DEAD + LINE LOAD = 2,000 PSF
DEAD + SEISMIC LOAD = 2,660 PSF

DESIGN CRITERIA

1. APPLICABLE CODE 2007 CALIFORNIA BUILDING CODE, ASCE 7-05
2. SEISMIC DESIGN NON-STRUCTURAL COMPONENTS, CHAPTER 13 & CHAPTER 15 ASCE 7-05

$$F_p = \frac{0.4\, a_p S_{DS} W_p}{\left(\frac{R_p}{I_p}\right)}\left(1 + 2\frac{Z}{h}\right)$$

W_p = WEIGHT

S_{DS} = 1

a_p = 1

I_p = 1.5

R_p = 2.5

Z = 0

h = EQUIVALENT HEIGHT

$F_{p_{min}} = 0.3\, S_{DS} I_p W_p$

$F_{p_{max}} = 1.6\, S_{DS} I_p W_p$

3. WIND DESIGN PER CBC SECTION 1609 OR ASCE 7 CHAPTER 6

$F_w = q_z G\, C_f$

$q_z = 0.00256\, K_z K_{zt}\, Kd\, V^2 I$

G = 0.85

C_f = SEE FIGURE 6-21 ASCE 7-05

K_z = SEE TABLE 6-3 ASCE 7-05

K_{zt} = 1

K_d = SEE TABLE 6-4 ASCE 7-05

I = 1.15

EXPOSURE B

V = 85 MPH

OCCUPANCY CATEGORY IV

POST-INSTALLED CONCRETE ANCHORS

CHEMICALLY BONDED ANCHORS:

1. ALL HOLES FOR POST-INSTALLED ANCHORS SHALL BE DRILLED, CLEANED AND PREPARED IN ACCORDANCE WITH MANUFACTURER'S RECOMMENDATIONS AND THE APPLICABLE ICC-ESR. WHERE AN ANCHOR DOES NOT SET PROPERLY, OR FAILS A TENSION TEST, OR REINFORCEMENT IS ENCOUNTERED DURING DRILLING, THE DRILLED HOLE MAY NOT BE REUSED. ABANDONED HOLES SHALL BE FILLED WITH NON-SHRINK GROUT. THE MINIMUM SPACING BETWEEN AN ABANDONED HOLE AND A DRILLED HOLE USED FOR A POST-INSTALLED ANCHOR SHALL NOT BE LESS THAN 1-1/2" ANCHOR DIAMETERS UNLESS OTHERWISE APPROVED BY THE COTR. IF THE ANCHOR OR DOWEL MAY NOT BE SHIFTED AS NOTED ABOVE, THE ENGINEER OF RECORD WILL DETERMINE A NEW LOCATION. LOCATE REINFORCEMENT, AVOID CUTTING (E) REBAR AND CONFIRM FINAL LOCATIONS PRIOR TO FABRICATING PLATES, MEMBERS, OR OTHER STEEL ASSEMBLIES ATTACHED WITH ADHESIVE ANCHORS.
2. COMPLY WITH 2007 CBC AND SHALL HAVE ESR REPORT NUMBER ISSUED BY ICC EVALUATION SERVICE.
3. ADHESIVE ANCHOR SHALL BE INSTALLED IN ACCORDANCE WITH MANUFACTURERS RECOMMENDATION & REQUIREMENT & THE PRODUCT ICC REPORT.
4. SPECIAL INSPECTION OF ADHESIVE ANCHOR SHALL BE IN ACCORDANCE WITH CBC SECTION 1701. ITEMS TO BE REPORTED ARE:
   - ADHESIVE PRODUCT INCLUDING THE NAME AND EXPIRATION DATE.
   - ANCHOR BOLT OR REBAR MATERIAL, GRADE DIAMETER, LENGTH & CLEANLINESS.
   - DRILL BIT DIAMETER.
   - HOLE DEPTH AND CLEANLINESS.
5. THE TESTING OF POST-INSTALLED ANCHOR SHALL BE DONE IN THE PRESENCE OF THE SPECIAL INSPECTOR AND A REPORT OF THE TEST RESULT SHALL BE SUBMITTED TO THE COTR.
6. POST-INSTALLED ANCHOR HAVE CONTINUOUS INSPECTION AS EXPLAINED IN CBC 2007 SECTION 1702.1.
7. A TENSION TEST IS REQUIRED ON 20% OF ALL BOLTS FOR EACH CONNECTION PLATE. IF ANY OF THE BOLTS FAIL THE TEST, 100% OF THE BOLTS SHALL BE TESTED. TEST LOCATIONS SHALL BE SELECTED BY THE COTR.

TENSION TEST LOADS (POUNDS)
HILTI HIT-RE 500 SD (ICC-ES ESR 2322)
CRACKED CONCRETE, SEISMIC, CONDITION B

NOMINAL ANCHOR DIAMETER	EDGE DISTANCE (INCHES)	EMBEDMENT DEPTH, h_{ef} (INCHES)	NORMAL-WEIGHT CONCRETE f'_c =3000 psi
			STAINLESS STEEL
5/8 BOLT	> 12	8	11,752
1/2 BOLT	5	6	5,351
1/2 BOLT	5	8	5,351
1/2 BOLT	> 12	4	5,351
#4 REBAR	12	8	6,122
#4 REBAR	3	8	3,950

QUALITY CONTROL

1. INSPECTIONS AND TESTING SHALL COMPLY WITH SPECIFICATIONS.
2. ALL INSPECTIONS INCLUDING SPECIAL INSPECTIONS AND CONTINUOUS INSPECTION SHALL BE DONE BY A QUALIFIED TESTING AGENCY AND QUALIFIED INSPECTORS AT THE EXPENSE OF THE CONTRACTOR. GOVERNMENT SHALL BE NOTIFIED IN ADVANCE TO WITNESS ALL THE TESTS. ALL TEST RESULTS DOCUMENTATIONS SHALL BE SUBMITTED TO THE GOVERNMENT.
3. SPECIAL INSPECTION SHALL COMPLY WITH 2007 CBC, CHAPTER 17. SPECIAL INSPECTION SHALL BE PROVIDED FOR THE FOLLOWING USE:

A) WELDING – WELDING SHALL BE DONE IN AN GOVERNMENT APPROVED SHOP. APPROVED FABRICATORS SHALL CONFORM TO CBC 1701. ALL FIELD WELDING SHALL HAVE CONTINUOUS INSPECTION.

B) EPOXY AND EXPANSION TYPE ANCHOR BOLTS.

C) REINFORCING STEEL PLACEMENT.

D) ALL CONCRETE WORK.

CONCRETE

1. CONCRETE SHALL DEVELOP THE FOLLOWING MINIMUM COMPRESSIVE STRENGTH AT 28 DAYS (MINIMUM F'C) WHEN TESTED IN ACCORDANCE WITH ASTM C39.

   ALL CONCRETE (NORMAL WEIGHT)..................3,000 PSI
2. PORTLAND CEMENT SHALL CONFORM TO ASTM C-150 TYPE II LOW ALKALI.
3. PROJECTING CORNERS OF FOUNDATION SHALL BE FORMED WITH A 3/4" CHAMFER.
4. PRIOR TO PLACING CONCRETE. THE CONTRACTOR SHALL ENSURE THAT ALL EMBEDMENTS, INCLUDING ANCHOR BOLTS, ARE PROPERLY LOCATED AND SECURELY TIED IN PLACE.
5. SUBMIT LOCATION PLAN FOR ALL PROPOSED JOINTS NOT INDICATED ON DRAWINGS FOR APPROVAL PRIOR TO WORK.
6. NON-SHRINK GROUT SHALL HAVE A MIN. 6000 PSI COMPRESSIVE STRENGTH.
7. DIMENSIONAL TOLERANCE FOR ALL CONCRETE WORK SHALL BE WITHIN ±1/8" OF DIMENSION SHOWN ON DRAWINGS. TOP OF FOOTING ELEVATIONS SHALL BE WITHIN ±1/16 OF ELEVATIONS SHOWN ON DRAWINGS. U.O.N.

Approved for Construction
Moffett Field Permit Board
(signature)
Chief Building Official
Permit No. 11P038

ZONE	LETTER	DESCRIPTION	DRAWN	DATE	APPRVD

REVISIONS

REGISTERED PROFESSIONAL ENGINEER AZITA FIROUZI No. 3836 STRUCTURAL STATE OF CALIFORNIA

REGISTERED PROFESSIONAL ENGINEER JAMES T. McCUSKER No. E013699 ELECTRICAL STATE OF CALIFORNIA

	DATE
DRAWN F.BONALDI (signature)	9.22.11
DESIGNED A.FIROUZI (signature)	9.22.11
CHECKED N.SHAH A. Firouzi for Nutan Shah	9.22.11
PROJMGR F.JONES (signature)	9.23.11
REQUESTER D.TRAN (signature)	9/26/11
R&QA	
SAFETY	
SUPERVISOR S.FRANKEL (signature)	OCT 21 2011

Ames Research Center
Moffett Field, California

RESTORATION OF ELECTRICAL DISTRIBUTION SYSTEM-HIGH VOLTAGE WP1
STRUCTURAL

STRUCTURAL NOTES, SYMBOLS, AND ABBREVIATIONS

SIZE D | CAGE CODE 25307 | A1---1001-S1 | REV
SCALE | INDEX | SHEET 1 OF 1

FILE NAME: A1---1001-S001_1_R7B.DWG 9-21-11

60176753.0001

DWG: R:\REDS\60176753 (K10018)_REDS - High Voltage\500 CAD\REDS_HV-WP1_Shared-WP1\S\Sheet\A1---1001-S001_1_RHV.dwg Version: 17.1s (LMS Tech) User: wbonaldi
DATE: Sep 22, 2011 - 8:12:04 am

DWG NO.	SH.	REV
A1---1001-M1		

MECHANICAL NOTES

1. MECHANICAL WORK SHALL CONFORM TO PROJECT SPECIFICATIONS. ALL WORK SHALL BE NEW, UNLESS OTHERWISE INDICATED. PROVIDE ALL LABOR AND MATERIAL FOR SPECIFIED WORK.
2. SUBMITTALS: REQUIRED SUBMITTALS MUST BE SUBMITTED TO COTR FOR APPROVAL PRIOR TO START OF WORK. SUBMIT WORK SCHEDULE WITH PROPOSED SHUTDOWNS FOR APPROVAL. SCHEDULE WORK TO MINIMIZE DISRUPTION TO OCCUPANTS. ALL SUBMITTALS SHALL BE IN ENGLISH UNITS. DO NOT COMMENCE WORK UNTIL RELATED SUBMITTALS ARE APPROVED.
3. EXISTING CONDITIONS: EXISTING PIPING ARE SHOWN ONLY WHERE NECESSARY TO ESTABLISH RELATIONSHIPS OR CONNECTION POINTS WITH NEW WORK. NOT ALL EXISTING PIPES AND EQUIPMENT ARE SHOWN. VERIFY EXACT SIZE AND LOCATION OF EXISTING SERVICES AT PROJECT SITE PRIOR TO ORDERING MATERIAL OR CONSTRUCTION. VERIFY REQUIRED CLEARANCES TO EXISTING MECHANICAL AND ELECTRICAL EQUIPMENT. NOTIFY COTR IF FIELD CONDITIONS DIFFER FROM THESE PLANS.
4. PRE-CONSTRUCTION HVAC DATA MEASUREMENTS: MEASURE OPERATING CONDITIONS FOR EXISTING AIR HANDLING SYSTEMS AH-1 IN ROOM # PRIOR TO COMMENCING ANY OTHER WORK ON THIS PROJECT. MEASURE ALL FANS, COILS, FILTERS, AND ALL AIR OUTLETS AND INLETS ASSOCIATED WITH ANY AIR HANDLING SYSTEM THAT IS AFFECTED BY WORK OF THIS PROJECT. SEE ASCS 15990 FOR REQUIRED DATA TO BE MEASURED FOR EACH DEVICE. PERFORM PRE-CONSTRUCTION DATA MEASUREMENTS PER AABC OR NEBB STANDARDS BY QUALIFIED TAB AGENCY. SUBMIT AIR BALANCE REPORT.
5. COORDINATE INSTALLATION WITH ALL TRADES.
6. SUPPORT AND BRACE ALL NEW PIPING AND DUCTWORK PER SMACNA "SEISMIC RESTRAINT MANUAL GUIDE LINES FOR MECHANICAL SYSTEMS" ANSI/SMACNA LATEST EDITION. USE TABLES DESIGNED FOR HAZARD LEVEL A (SHL-A).
7. DUCTWORK AND ACCESSORIES: GALVANIZED SHEET STEEL G-90. ERECT, CONSTRUCT AND SUPPORT ALL DUCTWORK IN ACCORDANCE WITH SMACNA HVAC DUCT CONSTRUCTION STANDARDS. CONSTRUCT DUCTWORK PER SPECIFIED SMACNA DUCT PRESSURE CLASS OF 2 WITH MINIMUM 26 GAUGE AND REINFORCEMENT APPROPRIATE FOR 8 FOOT SPACING. ALL DIMENSIONS ARE SHOWN IN INCHES. ALL SIZES ARE CLEAR INSIDE DIMENSIONS. RECTANGULAR DUCT FIRST DIMENSION IS SIDE VIEWED, SECOND DIMENSION IS PERPENDICULAR TO VIEW. PROVIDE ACCESS DOORS WHERE REQUIRED FOR SERVICE OR INSPECTION. TEST DUCT LEAKAGE ACCORDING TO SMACNA DUCT LEAKAGE TEST MANUAL, AND REPORT RESULTS. CERTIFY DUCT LEAKAGE MEETS TITLE 24 REQUIREMENTS.
8. DUCT INSULATION: NEW SUPPLY AIR DUCT SHALL BE INSULATED WITH 1.5" THICK, 0.75 LB./CU.FT. DENSITY FLEXIBLE FIBER GLASS INSULATION WITH FSK REINFORCED FOIL. INSTALL IN STRICT COMPLIANCE WITH MANUFACTURER'S RECOMMENDATION.
9. PIPING INSULATION: AP ARMAFLEX BY ARMACELL, OR EQUAL, ELASTOMERIC CLSED CELL PRE-FORMED PIPE INSULATION, THERMAL CONDUCTIVITY=0.27 BTUH-IN/SF/F AT 75 F, WATER VAPOR PERMIABILITY=0.08 PERM-IN, FM APPROVED, FLAME SPREAD/SMOKE DEVELOPED < 25/50. USE ARMAFIX IPH OR NPH PRE-INSULATED PIPE SUPPORT INSERTS, OR EQUAL. USE MANUFACTURERE RECOMMENDED ADHESIVE TO COMPLETELY DEAL ALL JOINTS AND SEAMS. DO NOT APPLY LAQUER VAPOR FILM COATING.
   CHILLED WATER: 1" THICKNESS
   HOT WATER: 1.5" THICKNESS
   CONDENSATE DRAIN: 1" THICKNESS
10. AS-BUILTS: MAINTAIN RECORDED "AS-BUILT" INFORMATION ON ALL EXISTING SERVICES UNCOVERED DURING CONSTRUCTION, AND ALL NEW SERVICES BEING INSTALLED. "AS-BUILT" INFORMATION SHALL BE CLEARLY MARKED IN COLOR ON A REPRODUCIBLE PRINT OF CONTRACT DRAWINGS. AT THE COMPLETION OF THE CONTRACT, SUBMIT RECORDED "AS-BUILT" INFORMATION TO THE GOVERNMENT.
11. CUTTING, DRILLING OR MODIFYING ANY EXISTING STRUCTURAL MEMBERS, BEAMS OR WALLS IS FORBIDDEN WITHOUT PRIOR APPROVAL FROM THE COTR.
12. CONTRACTOR SHALL REPAIR EXISTING ASPHALT PAVEMENT WHERE DAMAGED BY NEW WORK. THE STRUCTURAL SECTION OF A.C. PAVEMENT PATCHING SHALL BE MINIMUM OF 4" AC/ 8" AB.
13. ALL WORK ON POTABLE WATER LINES SHALL BE IN ACCORDANCE WITH AMES APG 1700.1 (AMES HEALTH AND SAFETY MANUAL), AWWA C651-99 (AWWA STANDARD FOR DISINFECTING WATER MAINS) AND CPC-LATEST EDITION (CALIFORNIA PLUMBING CODE).
14. INSTALLATION: ALL WORK SHALL BE INSTALLED, COORDINATED WITH OTHER TRADES, AND CLEAR OF OTHER EQUIPMENT, WALLS AND STRUCTURES, ETC. INSTALL ALL EQUIPMENT IN ACCORDANCE WITH MANUFACTURER'S WRITTEN INSTRUCTIONS AND RECOMMENDATIONS, ACCORDING TO IT'S LISTING REQUIREMENTS, AND WITH ALL REQUIRED CLEARANCES FOR SERVICING AND REPAIR.
15. DEMOLITION: REMOVE FROM THE PREMISES AND DISPOSE OF ALL ITEMS IDENTIFIED TO BE REMOVED OR DEMOLISHED, UNLESS OTHERWISE NOTED. REMOVE PIPING TO POINT OF DISCONNECTION SHOWN ON PLANS. COVER OPEN ENDS TO PREVENT ENTRY OF DIRT OR DEBRIS INTO PIPING WHICH HAS BEEN CUT.
16. COMPRESSED AIR PIPING SYSTEM DESIGN PRESSURE AND TEST PRESSURE:
17. COMPRESSED AIR SYSTEM SHALL BE DESIGNED, FABRICATED, INSTALLED AND TESTED PER ASME B31.3 CATAGORY DSERVICE.

    MAX. DESIGN PRESSURE: 150PSIG
    PNEUMATIC LEAK TEST PRESSURE: 165PSIG
    MAX. DESIGN TEMPERATURE: 150° F
    MIN. DESIGN TEMPERATURE: 38° F
18. COMPRESSED AIR PIPING BRAZING AND SOLDERING SHALL COMPLY WITH ASTM B31.2 SECTION 333.

TITLE 24 COMPLIANCE SPECIFICATIONS

1. CERTIFY THAT MECHANICAL SYSTEMS INSTALLATION MEETS ACCEPTANCE REQUIREMENTS FOR CODE COMPLIANCE, PER TITLE 24 SECTION 125. CERTIFICATIONS SHALL INCLUDE:
   DUCT WORK PER SECTION 124(a) THROUGH 124(f)
   HYDRONIC SYSTEM CONTROLS
2. SUBMIT CERTIFICATES OF ACCEPTANCE TO NASA ARC COTR.

HYDRAULIC PIPING/TUBING GENERAL NOTES

1. ASME STANDARD: DESIGN, FABRICATE, INSTALL, INSPECT, AND TEST ALL NEW HYDRAULIC PIPING AND TUBING IN ACCORDANCE WITH ASME B31.3-2010 NORMAL SERVICE PIPING. SEE MECHANICAL GENERAL NOTES FOR ADDITIONAL REQUIREMENTS.
2. SYSTEM DESIGN LIMITS: DESIGN PRESSURE = 3000 PSIG, SYSTEM DESIGN TEMPERATURE: MINIMUM=50°F, MAXIMUM=180°F.
3. SUBMITTALS: SUBMIT QUALIFICATIONS AND QUALITY ASSURANCE MANUAL OF PERFORMING FABRICATOR. SUBMIT SHOP DRAWINGS OF PROPOSED PIPING MODIFICATIONS FOR APPROVAL. SUBMIT RECORD DRAWING JOB SITE MARK-UPS, AND ELECTRONIC .DWG FILE PER AUTOCAD RELEASE 2008, OR LATER.
4. QUALIFICATION OF CONTRACTOR: PERFORM ALL PIPING/TUBING FABRICATION AND INSTALLATION OF PRESSURE COMPONENTS BY A FABRICATOR AUTHORIZED BY ASME TO APPLY THE APPROPRIATE "U" OR "PP" STAMP. PERFORM ALL WORK IN STRICT ACCORDANCE WITH THE ASME QUALITY ASSURANCE MANUAL OF THE PERFORMING FABRICATOR.
5. PIPING/TUBING MODIFICATIONS: CONTRACTOR SHALL BE RESPONSIBLE FOR MODIFICATIONS NECESSARY TO CONNECT NEW EQUIPMENT. MODIFICATIONS ARE SUBJECT TO APPROVAL BY COTR. ALL PIPING/TUBING COMPONENTS SHALL BE SUITABLE FOR THE PRESSURE, TEMPERATURE AND SERVICE, AND FULLY COMPLY WITH ASME B31.3.
6. INSTALLATION: TORQUE OR TIGHTEN ALL NEW VALVES, FLANGES, HOSES, AND COMPRESSION-TYPE FITTINGS PER MANUFACTURER INSTALLATION INSTRUCTIONS AND RECOMMENDATIONS. BOLTS AND STUDS MUST HAVE MINIMUM TWO FULL THREADS BEYOND NUT AFTER ASSEMBLY. PROVIDE ALL LABOR FOR FLUSHING, AND TESTING.
7. PAINTING: STAINLESS STEEL COMPONENTS SHALL NOT BE PAINTED.
8. PIPING/TUBING PRE-CLEANING: PURGE ALL NEW PIPING/TUBING WITH SHOP AIR AFTER FABRICATION AND BEFORE THE FINAL TUBING. PURGE AT A MINIMUM AIR VELOCITY OF 15 FEET PER SECOND UNTIL NO FOREIGN MATTER, WATER, OR OIL IS VISIBLE AT TUBING EXIT. CAP CLEANED TUBING AT BOTH ENDS FOR SHIPMENT TO AVOID ENTRY OF FOREIGN MATTER INSIDE TUBING.
9. PIPING/TUBING PREPARATION PRIOR TO PRESSURE TEST:
   A. CHECK PIPE SYSTEM FOR COMPLIANCE WITH CONTRACT DRAWINGS AND SPECIFICATIONS.
   B. EXAMINE PIPING SYSTEM AFTER FABRICATION AND ASSEMBLY OF PIPING TO ENSURE THAT PIPES ARE FREE OF FOREIGN MATERIALS.
   C. SUPPLY AND INSTALL HIGH POINT VENTS AND LOW POINT DRAINS IN PIPES FOR HYDROSTATIC TESTING. PROVIDE ½" BLEED VENT VALVES TO RELEASE TRAPPED AIR, AND ½" DRAIN VALVES TO PURGE PIPES. VENT AND DRAIN VALVES SHALL BE CERTIFIED PER ASME B16.34.
   D. ZERO LEAKAGE IS REQUIRED. TEST BOUNDARIES MUST NOT INCLUDE CLOSED VALVES WHICH COULD LEAK DURING TEST.
10. HYDROSTATIC TEST PRESSURE:
    A. HYDRAULIC OIL PIPING/TUBING: 4,500 PSIG (1.5 x DESIGN PRESSURE OF 3,000 PSIG)
11. HYDROSTATIC PRESSURE TEST PROCEDURE (FOR PIPING/TUBING ONLY):
    A. PERFORM ALL TESTING WITH ALL JOINTS EXPOSED.
    B. FILL PIPING/TUBING SYSTEM WITH HYDRAULIC OIL. PIPE METAL AND TEST FLUID TEMPERATURE SHALL BE 50°F, OR GREATER, DURING PRESSURE TEST.
    C. OPEN ALL VALVES WITHIN HYDROSTATIC TEST BOUNDARIES, DURING TEST.
    D. PRESSURE TEST ALL NEW OR MODIFIED EXISTING PRESSURE PIPING FOR 10 MINUTES AT TEST PRESSURE WITH NO LEAKAGE. REPAIR ANY LEAKS, AND REPEAT PRESSURE TEST. REFER TO DRAWING M6 FOR HYDROTEST BOUNDARIES.
    E. TEST SHALL BE WITNESSED BY AMES PRESSURE SYSTEM SAFETY MANAGER OR TECHNICAL REPRESENTATIVE. COMPLETE ARC FORM 342 (FORM SUPPLIED BY GOVERNMENT).
12. LEAK TEST: AFTER COMPLETION OF HYDROSTATIC PRESSURE TEST, OPERATE THE HYDRAULIC SYSTEM AND PRESSURIZE SUPPLY LINE AT MAXIMUM OPERATING PRESSURE OF 2700 PSIG. LEAK TEST SUPPLY AND RETURN LINES, NO LEAKS ALLOWED. REPAIR LEAKS AND REPEAT LEAK TEST IF LEAKS ARE FOUND. SUBMIT LEAK TEST SCHEDULE FOR COTR APPROVAL, AND CONFIRM TEST TIME NO LESS THAN 24 HOURS BEFORE LEAK TEST BEGINS.
13. TEST RECORDS: PREPARE AND SUBMIT TEST REPORTS INCLUDING HYDROSTATIC TEST, SPOOL/JOINT DRAWINGS, AND FABRICATION QC RECORDS INCLUDING MATERIAL TEST REPORTS TO COTR FOR ALL PIPING/TUBING SYSTEMS. SUBMIT TEST REPORTS TO THE COTR FOR FINAL ACCEPTANCE WITHIN 3 DAYS OF TEST COMPLETION. TEST REPORTS SHALL BECOME PROPERTY OF THE GOVERNMENT.

CODES AND STANDARDS

SEE SHEET G4.

ABBREVIATIONS (NOT ALL ABBREVIATIONS HAVE BEEN USED)

AB	AGGREGATE BASE
AC	ASPHALTIC CONCRETE
ACM	ASBESTOS CONTAINING MATERIAL
AHU	AIR HANDLING UNIT
AI	ANALOG INPUT
AMP	AMPERE
AN	ARMY NAVY
AO	ANALOG OUTPUT
ASCS	AMES STANDARD CONSTRUCTION SPECIFICATION
AVA	AIR VENT (AUTOMATIC)
BFP	BACKFLOW PREVENTER ASSEMBLY
BOD	BOTTOM OF DUCT
CA	COMPRESSED AIR
CAP	CAPACITY
CER	CEILING EXHAUST REGISTER
CC	COOLING COIL
CC	
CFF	CAP FOR FUTURE CONNECTION
CFM	CUBIC FOOT PER MINUTE
CG	CEILING GRILLE
CD	CONDENSATE DRAIN
CH	CHILLER
CHW	CHILLED WATER
CHWR	CHILLED WATER RETURN
CHWS	CHILLED WATER SUPPLY
CO	CLEAN OUT
CONC.	CONCRETE
COTR	CONTRACTING OFFICER'S TECHNICAL REPRESENTATIVE
CW	DOMESTIC COLD WATER
CWP	CHILLED WATER PUMP
DB	DRY BULB
DCW	DOMESTIC COLD WATER
DHW	DOMESTIC HOT WATER
DEFL	DEFLECTION
DHP	DUCTLESS HEAT PUMP
DI	DI-IONIZED WATER
DIA	DIAMETER
DO	DIGITAL OUTPUT
DN	DOWN
DP	DIFFERENTIAL PRESSURE
DPT	DIFFERENTIAL PRESSURE TRANSDUCER
DPU	DIGITAL POINT UNIT
DSD	DUCT SMOKE DETECTOR
DW	DEIONIZED WATER
DX	DIRECT EXPANSION
(E)	EXISTING
EA	EACH
EAT	ENTERING AIR TEMPERATURE
EF	EXHAUST FAN
EG	EXHAUST GRILLE
(ER)	EXISTING RELOCATE
ESP	EXTERNAL STATIC PRESSURE
ET	EXPANSION TANK
EWT	ENTERING WATER TEMPERATURE
F	FIRE SPRINKLER LINE
F&T	FLOAT & THERMOSTATIC STEAM TRAP
FA	FROM ABOVE
FACP	FIRE ALARM CONTROL PANEL
FAI	FRESH AIR INTAKE
FC	FLEXIBLE CONNECTION
FCO	FLOOR CLEAN OUT
FD	FLOOR DRAIN, FIRE DAMPER
FLA	FULL LOAD AMPERE
FLEX	FLEXIBLE
FLR	FLOOR
FMCS	FACILITY MANAGEMENT CONTROL SYSTEM
FSW	FAN SENSOR SWITCH
FSK	FOIL-SCRIM-KRAFT
FTG	FITTING
FSD	COMBINATION FIRE AND SMOKE DAMPER
FW	FIRE WATER
G	GAS LINE
GFE	GOVERNMENT FURNISHED EQUIPMENT
GCO	GROUND CLEAN OUT
GFCI	GOVERNMENT FURNISHED CONTRACTOR INSTALLED
GSM	GALVANIZED SHEET METAL
HDT	HORIZONTAL DRAW THRU
HSPF	HEATING SEASONAL PERFORMANCE FACTOR
HW	DOMESTIC HOT WATER
HWP	HOT WATER PUMP
HWR	HOT WATER RETURN
HWS	HOT WATER SUPPLY
HVAC	HEATING VENTILATING AND AIR CONDITIONING
IDU	INDOOR HEAT PUMP UNIT
IFW	IN FURRED WALL
IGV	INLET GUIDE VANES
ISU	IN-SPACE AIR CONDITIONING UNIT
IVB	INVERTED BUCKET STEAM TRAP
kW	KILOWATT
LPS	LOW PRESSURE STEAM SUPPLY
LPR	LOWER PRESSURE CONDENSATE RETURN
LRA	LOCKED ROTOR AMPERE
LWT	LEAVING WATER TEMPERATURE
MAX	MAXIMUM
MCA	MINIMUM CIRCUIT AMP
MCC	MOTOR CONTROL CENTER
MD	AUTOMATIC MOTORIZED DAMPER
MER	MECHANICAL EQUIPMENT ROOM
MIN	MINIMUM
MHP	MOTOR HORSEPOWER
MOCP	MAXIMUM OVER CURRENT PROTECTION
MS	MOTOR STARTER
MTD	MOUNTED
(N)	NEW
N.I.C.	NOT IN CONTRACT
N.O.	NORMALLY OPEN
NRC	NOISE REDUCTION COEFFICIENT
N.T.S.	NOT TO SCALE
ODC	OZONE DEPLETING COMPOUND
ODP	OZONE DEPLETION POTENTIAL
ODU	OUTDOOR HEAT PUMP UNIT
OBD	OPPOSED BLADE DAMPER
OSA	OUTSIDE AIR
Pa	PASCAL
PD	PRESSURE DIFFERENTIAL
PRV	PRESSURE REDUCING VALVE
(R)	RELOCATED
REF	REFERENCE
RF	RETURN FAN
RG	RETURN AIR GRILLE
RH	RELATIVE HUMIDITY
RL	REFRIGERANT LIQUID
RPM	REVOLUTION PER MINUTE
RS	REFRIGERANT SUCTION
SCH	SCHEDULE
S.D	SMOKE DETECTOR
SEER	SEASONAL ENERGY EFFICIENCY RATIO
SF	SUPPLY FAN
SENS	SENSIBLE
SG	SUPPLY AIR GRILLE
SM	SHEET METAL
SMACNA	SHEET METAL AND AIR CONDITIONING CONTRACTORS' NATIONAL ASSOCIATION
SP	STATIC PRESSURE
SR	SUPPLY REGISTER
SS	STAINLESS STEEL
ST	SOUND TRAP
STC	SOUND TRANSMISSION COEFFICIENT
T	THERMOSTAT
TEC	TERMINAL EQUIPMENT CONTROLLER
TCC	TOTAL COOLING CAPACITY
THC	TOTAL HEATING CAPACITY
TP	TRAP PRIMER
TYP	TYPICAL
UF	UNDER RAISED FLOOR
UON	UNLESS OTHERWISE NOTED
USC	UNIVERSITY OF SOUTHERN CALIFORNIA
V	VENT PIPING
VAC	VACUUM PIPING
VAV	VARIABLE AIR VOLUME
VB	VACUUM BREAKER
VD	VOLUME DAMPER
VFD	VARIABLE FREQUENCY DRIVE
VIF	VERIFY IN FIELD
VTR	VENT THROUGH ROOF
W	SANITARY WASTE
WB	WET BULB
WC	WATER CLOSET
WCO	WALL CLEAN OUT
WH	WATER HEATER
WRC	WIRELESS REMOTE CONTROLLER
WT	WEIGHT

Approved for Construction
Moffett Field Permit Board
Chief Building Official
Permit No. 11P038

REGISTERED PROFESSIONAL ENGINEER — JIN F. XIANG — M 31032 — Exp 6/30/13 — MECHANICAL ENGINEER — STATE OF CALIFORNIA

GENERAL SYMBOLS

SEE SHEET G4 FOR INFORMATION.

MECHANICAL SYMBOLS

- EXISTING MECHANICAL ITEM TO BE REMOVED
- EXISTING MECHANICAL ITEM TO REMAIN
- NEW MECHANICAL WORK
- DUCT SIZE: FIRST DIMENSION FOR SIDE SHOWN (12x8 / 12x8)

AR	AR	AIR
CD	CD	CONDENSATE DRAIN
SD	SD	STORM DRAIN
SS	SS	SANITARY SEWER OR WASTE
ST	ST	STEAM
V	V	SANITARY VENT
DCW	DCW	DOMESTIC COLD WATER
W	W	POTABLE WATER
G	G	NATURAL GAS
C	C	COMMUNICATION
E	E	ELECTRICAL

- UTILITIES TO BE DEMOLISHED
- PIPE DOWN
- PIPE UP
- CHECK VALVE
- FLEXIBLE PIPE CONNECTION
- FLEXIBLE HOSE
- GATE VALVE
- BALL VALVE
- BALL VALVE (FLANGED)
- PRESSURE REDUCING VALVE
- PRESSURE SAFETY RELIEF VALVE
- PUMP
- MANUAL AIR VENT
- PIPE REDUCER (CONCENTRIC)
- KEY NOTE REFERENCE
- POINT OF CONNECTION
- POINT OF DISCONNECTION
- PIPE REDUCER (ECCENTRIC)
- PRESSURE GAGE
- PRESSURE AND TEMPERATURE TEST PLUG
- STRAINER WITH BLOW-DOWN VALVE
- UNION
- FLANGE
- PIPE UP
- PIPE DOWN
- PIPE CAP
- F — WET PIPE FIRE SPRINKLER PIPING
- CD — CONDENSATE WASTE DRAIN
- FIRE SPRINKLER HEAD
- PIPE SUPPORT

ZONE	LETTER	DESCRIPTION	DRAWN	DATE	APPRVD

REVISIONS

DRAWN	V.JAMNEJAD	DATE 9/21/11
DESIGNED	V.JAMNEJAD	DATE 9/21/11
CHECKED	J.XIANG	DATE 9/21/11
PROJMGR	F.JONES	DATE 9.25.11
REQUESTER	D.TRAN	DATE 9-26-11
R&QA		DATE
SAFETY		DATE
SUPERVISOR	S.FRANKEL	DATE OCT 21 2011
		DATE

NASA — **Ames Research Center** — Moffett Field, California

RESTORATION OF ELECTRICAL DISTRIBUTION SYSTEM-HIGH VOLTAGE WP1
MECHANICAL

MECHANICAL NOTES, SYMBOLS AND ABBREVIATIONS

SIZE	CAGE CODE	REV
D	25307	A 1---1001-M1
SCALE	AS SHOWN	INDEX SHEET 1 OF 1

FILE NAME: A1---1001-M01_RHV 9-21-11

60176753.0001

DWG: \\N213FS2\Proj\REDS\60176753 (K10018)_REDS - High Voltage\500 CAD\REDS_HV-WP1_Shared-WP1\M\Sheet\A1---1001-M001_1_RHV.dwg Version: 17.1s (LMS Tech) User: golden
DATE: Sep 20, 2011 - 5:22:02 pm

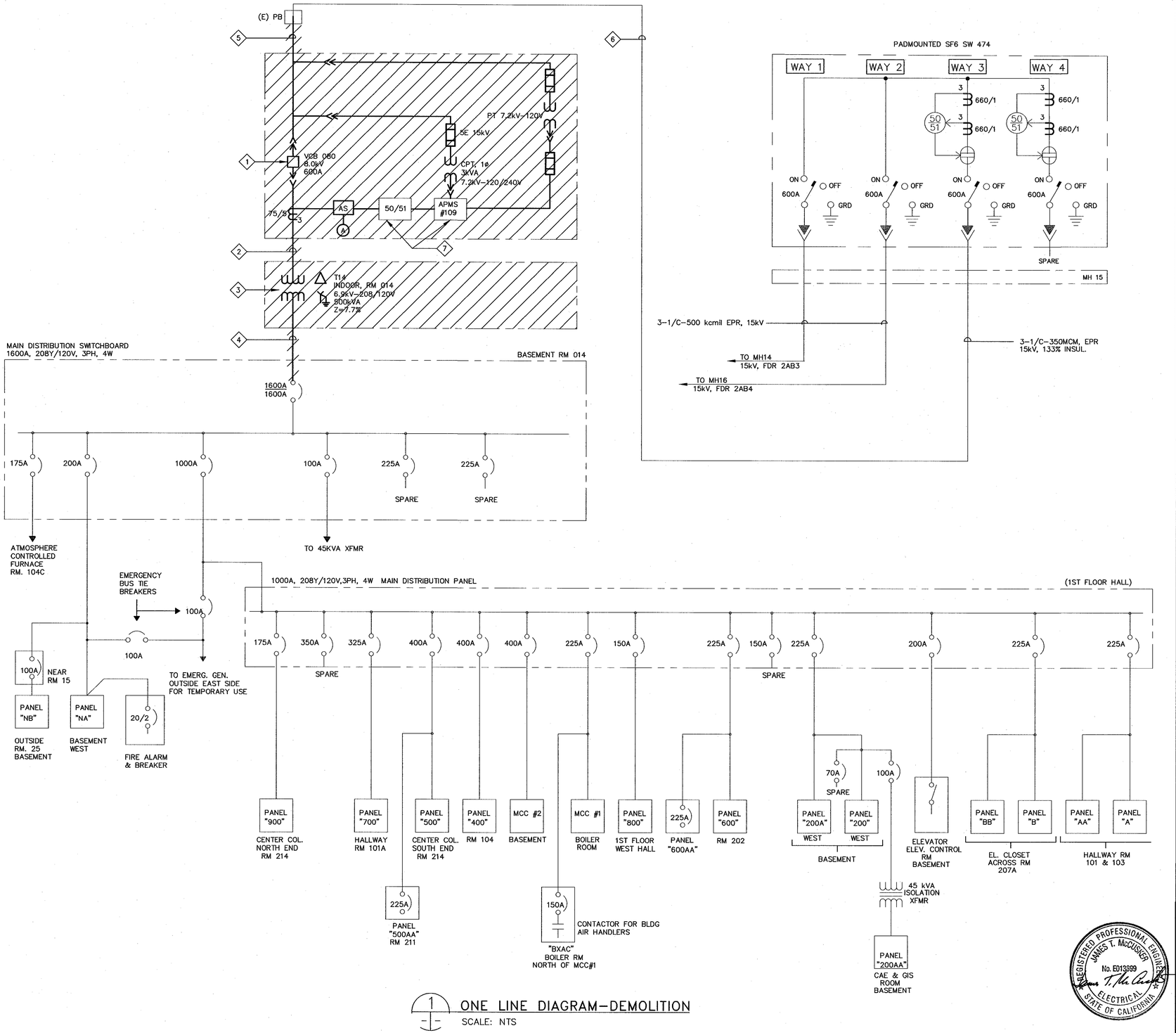

1 ONE LINE DIAGRAM-DEMOLITION
SCALE: NTS

SHEET NOTES

1. FOR GENERAL NOTES, SYMBOLS AND ABBREVIATIONS, SEE DRAWING G4.
2. NOT ALL CONDUITS AND CONDUCTORS ARE SHOWN ON THE DRAWING.
3. SINGLE LINE DIAGRAM IS BASED ON THE LATEST KNOWN EXISTING DRAWINGS.
4. HATCHED LINES INDICATE EXISTING MATERIAL AND EQUIPMENT TO BE DEMOLISHED/ REMOVED, U.O.N.
5. PRIOR TO SHUTDOWN AND DEMOLITION WORK, CONTRACTOR SHALL PERFORM PHASE SEQUENCE TEST ON EXISTING SYSTEM IN THE PRESENCE OF THE CONTRACTING OFFICER. ALL DISCONNECTED CABLES THAT ARE TO REMAIN SHALL BE PROPERLY IDENTIFIED, TAGGED FOR RESTORATION IN NEW WORK.

KEY NOTES

1. REMOVE EXISTING 6.9kV PRIMARY SWITCHGEAR AND CIRCUIT BREAKER VCB080 AND ALL ASSOCIATED EQUIPMENT AND DEVICES.
2. REMOVE CONNECTION (CABLE) BETWEEN VCB080 AND TRANSFORMER T14.
3. REMOVE EXISTING TRANSFORMER T14 AND ALL ASSOCIATED EQUIPMENT AND DEVICES. SEE DRAWING E5 FOR LAYOUT.
4. REMOVE CONNECTION BETWEEN TRANSFORMER T14 AND LV MAIN DISTRIBUTION SWITCHBOARD.
5. PULL THE (E) CABLES BACK TO THE PULLBOX FOR LATER RECONNECTION. REMOVE (E) 4" CONDUIT.
6. EXISTING 15kV CABLE TO REMAIN IN PLACE.
7. REMOVE, PROTECT FROM DAMAGE AND TURN OVER TO THE GOVERNMENT.

Approved for Construction
Moffett Field Permit Board
Chief Building Official
Permit No. 11P038

ZONE	LETTER	DESCRIPTION	DRAWN	DATE	APPRVD

REVISIONS

DRAWN N.NIZAMOVA	DATE 9/21/11	
DESIGNED N.NIZAMOVA	DATE 9/21/11	
CHECKED J.McCUSKER	DATE 9.21.11	
PROJMGR F.JONES	DATE 9.23.11	
REQUESTER D.TRAN	DATE 9.23.11	
R&QA	DATE	
SAFETY	DATE	
SUPERVISOR S.FRANKEL OCT 24 2011	DATE	

REGISTERED PROFESSIONAL ENGINEER JAMES T. McCUSKER No. EO13699 ELECTRICAL STATE OF CALIFORNIA

Ames Research Center
Moffett Field, California

RESTORATION OF ELECTRICAL DISTRIBUTION SYSTEM-HIGH VOLTAGE WP1
N213 WEST INDOOR SUBSTATION
ELECTRICAL

ONE LINE DIAGRAM DEMOLITION

SIZE	CAGE CODE	REV
D	25307	A
SCALE	INDEX	SHEET 1 OF 1

FILE NAME: A1---1001-E002_1_R7B.DWG 9-21-11

60176753.0001

DWG: \\N213CS01\Proj\REDS\60176753 (K10018)_REDS - High Voltage\500 CAD\REDS_HV-WP1\N213-Substation\E\Sheet\A1---1001-E002_1_RHV.dwg Version: 17.1s (LMS Tech) User: pdden
DATE: Sep 20, 2011 - 5:22:07 pm

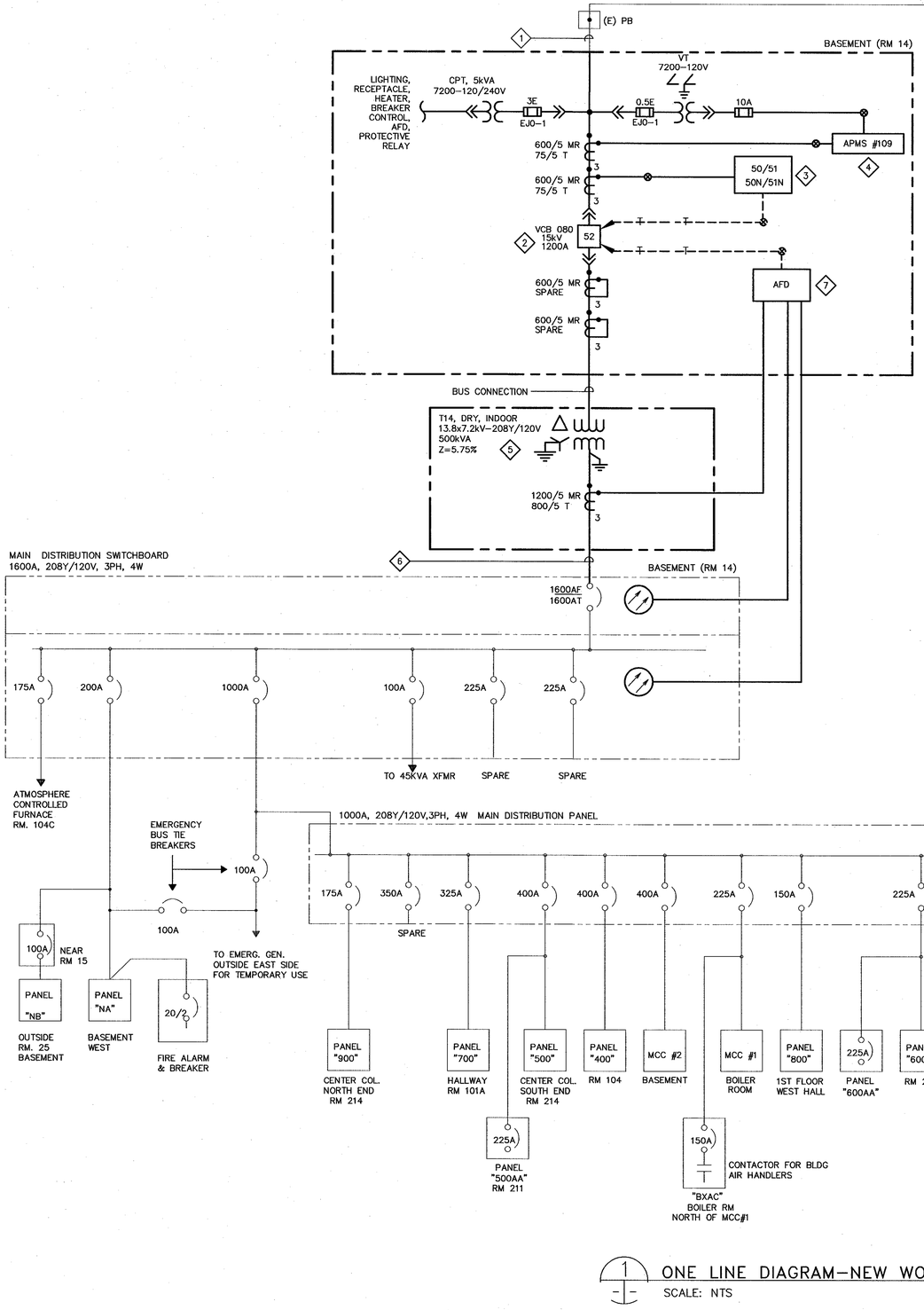

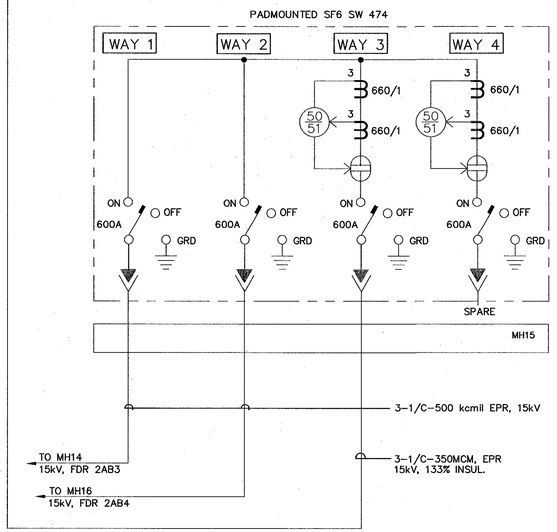

SHEET NOTES

1. FOR GENERAL NOTES, SYMBOLS AND ABBREVIATIONS, SEE DRAWING G4.
2. SINGLE LINE DIAGRAM IS BASED ON THE LATEST KNOWN EXISTING NASA DRAWING.
3. LIGHT LINES DENOTE EXISTING MATERIAL/ EQUIPMENT TO REMAIN.
4. ALL INDOOR EQUIPMENT TO BE RATED FOR USE IN NEMA 12 ENVIRONMENT, MINIMUM.
5. NOT ALL CONDUITS AND CONDUCTORS ARE SHOWN ON DWG.
6. DARK OR HEAVY LINES INDICATE NEW MATERIAL/EQUIPMENT TO BE PROVIDED. U.O.N.
7. THE DIAGRAM IS PROVIDED FOR GUIDANCE ONLY. THE CONTRACTOR SHALL FIELD VERIFY ALL EXISTING EQUIPMENT INCLUDING TERMINAL BLOCKS, TERMINAL IDENTIFICATION NUMBER, CONNECTIONS ETC. AND REVISE DRAWINGS AS NEEDED TO MATCH EXISTING AND NEW EQUIPMENT TO PROVIDE A COMPLETE FUNCTIONAL SYSTEM.
8. ALL CT WIRES SHALL BE #10 AWG MINIMUM, TYPE SIS. ALL VOLTAGE, CPT SECONDARY AND BREAKER TRIP WIRES SHALL BE #12 AWG MINIMUM, TYPE SIS. U.O.N.
9. CONTRACTOR SHALL FIELD VERIFY ALL EQUIPMENT RATING PRIOR TO ORDERING ANY MATERIALS.
10. CPT AND VT'S SHALL BE DRAWOUT TYPE.
11. SEE DRAWING E9 FOR THREE LINE DIAGRAM AND E10 FOR BREAKER CONTROL DIAGRAM.
12. SEE DRAWING E63 FOR NAMEPLATE SCHEDULE.

KEY NOTES

1. EXTEND (E) 15kV, 3–1/C 350KCMIL, 133% INSULATION, EPR CABLE AND 1/C #4/0 GND FROM (E) PULL BOX TO VCB080 AS NECESSARY AND SPLICE IN THE (E) PULL BOX.
2. PROVIDE NEW 15kV, 1200A SWITCHGEAR WITH VACUUM CIRCUIT BREAKER VCB080, CPT, VT AND ALL ACCESSORIES PER SPECIFICATION SECTION 26 13 00.00 20.
3. INSTALL GFE ALSTOM RELAY COMPLETELY WIRED INTO THE NEW SWITCHGEAR. INSTALLATION SHALL BE IN ACCORDANCE WITH DRAWINGS E64 & E68.
4. INSTALL GFE 3–PHASE DIGITAL POWER METER COMPLETELY WIRED INTO THE NEW SWITCHGEAR. INSTALLATION SHALL BE IN ACCORDANCE WITH DRAWINGS E64 & E68.
5. PROVIDE NEW INDOOR DRY TYPE TRANSFORMER T014, ELECTROSTATIC SHIELDED, TOTALLY ENCLOSED, INCLUDING ALL ACCESSORIES PER SPECIFICATION SECTIONS 26 11 16 & 26 12 00.00 40.
6. PROVIDE 4 [4(750 KCMIL, CU) & 1#4/0 GRD] BETWEEN TRANSFORMER T14 AND (E) LV MAIN DISTRIBUTION SWITCHBOARD.
7. INSTALL ARC FLASH DETECTOR COMPLETELY WIRED INTO THE NEW SWITCHGEAR. INSTALLATION SHALL BE IN ACCORDANCE WITH MANUFACTURER'S RECOMENDATIONS.

1 ONE LINE DIAGRAM–NEW WORK
SCALE: NTS

Approved for Construction
Moffett Field Permit Board
Chief Building Official
Permit No. 11P038

ZONE	LETTER	DESCRIPTION	DRAWN	DATE	APPRVD

REVISIONS

DRAWN	N.NIZAMOVA	DATE 9/21/11
DESIGNED	N.NIZAMOVA	DATE 9/21/11
CHECKED	J.McCUSKER	DATE 9-21-11
PROJMGR	F.JONES	DATE 9.22.11
REQUESTER	D.TRAN	DATE 9/26/11
R&QA		DATE
SAFETY		DATE
SUPERVISOR	S.FRANKEL	DATE OCT 21 2011

REGISTERED PROFESSIONAL ENGINEER JAMES T. McCUSKER No. E013699 ELECTRICAL STATE OF CALIFORNIA

Ames Research Center
Moffett Field, California

RESTORATION OF ELECTRICAL DISTRIBUTION SYSTEM–HIGH VOLTAGE WP1
N213 WEST INDOOR SUBSTATION
ELECTRICAL

ONE LINE DIAGRAM NEW WORK

SIZE	CAGE CODE	DWG NO.	REV
D	25307	A1---1001-E3	
SCALE	NTS	INDEX	SHEET 1 OF 1

FILE NAME: A1---1001-E003_1_R7.DWG 9-21-11

601767753.0001

DWG: \\N213FS2\Proj\REDS\601767753 (X10018)_REDS - High Voltage\500 CAD\REDS_HV-WP1\N213-Substation\E\Sheet\A1---1001-E003_1_R#V.dwg Version: 17.1s (LMS Tech) User: polden
DATE: Sep 20, 2011 - 5:22:12 pm

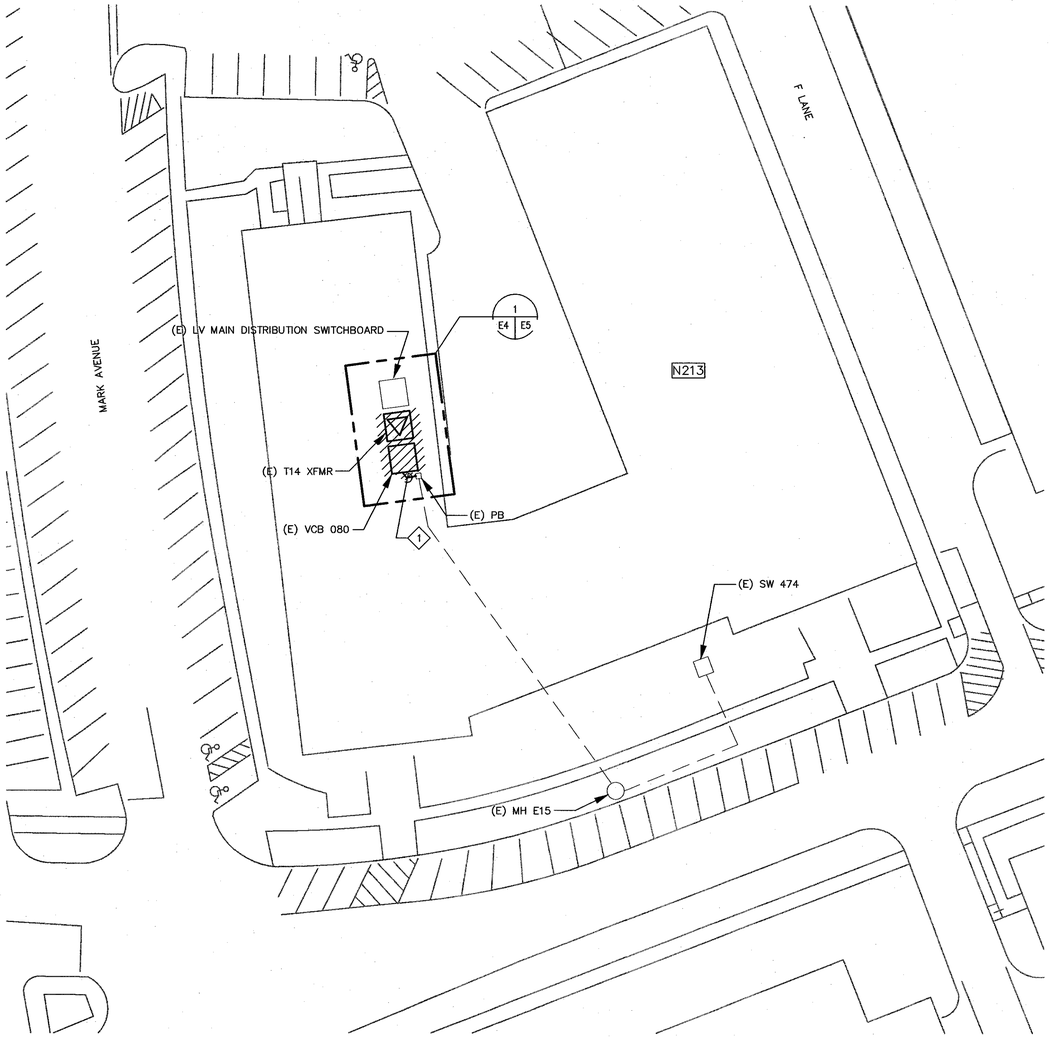

1 SITE PLAN – DEMOLITION
SCALE: 1"=30'

1"=30'-0" 0 15 30 60 90

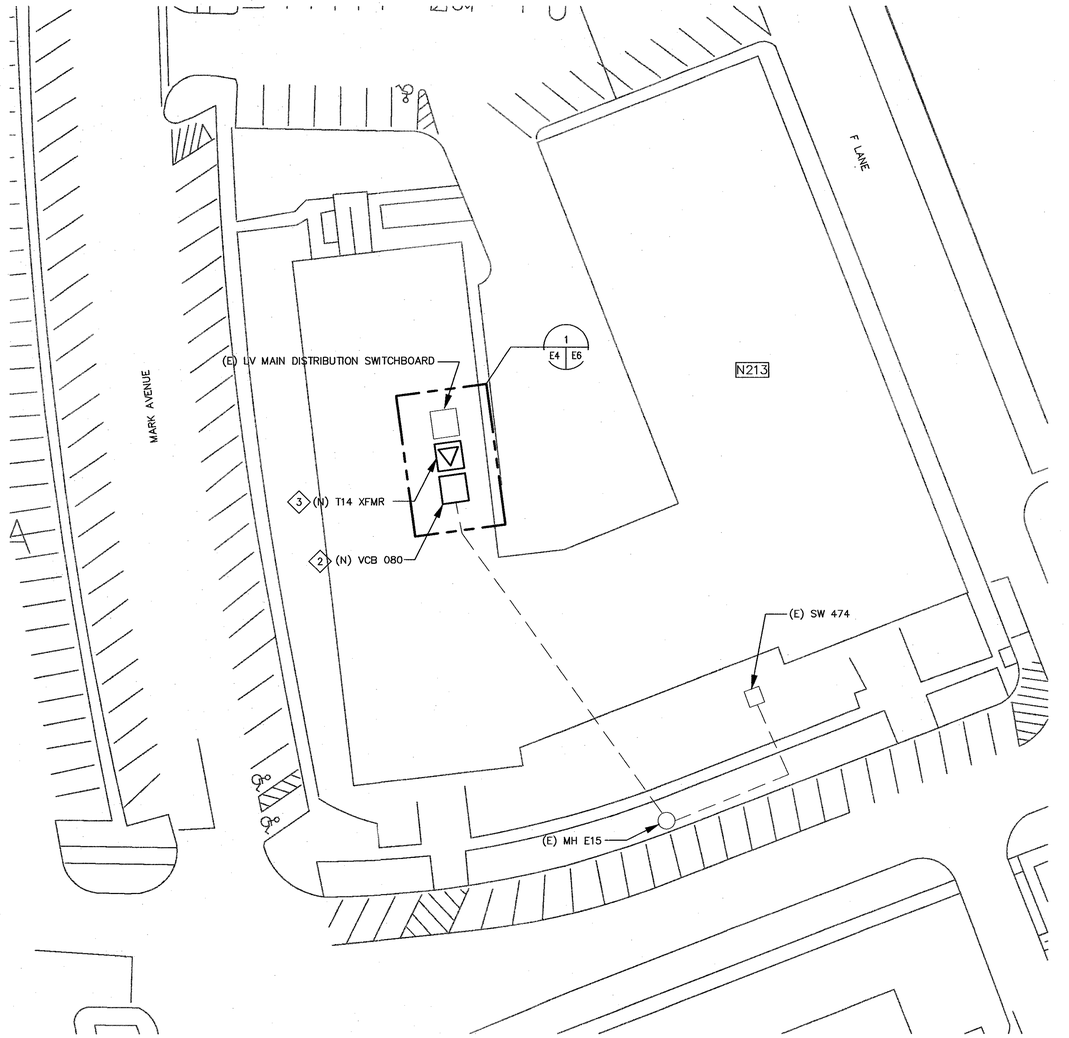

2 SITE PLAN – NEW WORK
SCALE: 1"=30'

1"=30'-0" 0 15 30 60 90

SHEET NOTES

1. FOR GENERAL NOTES, SYMBOLS AND ABBREVIATIONS, SEE DRAWING G4.
2. NOT ALL CONDUITS AND CONDUCTORS ARE SHOWN ON THE DWG.
3. HATCHED LINES INDICATE EXISTING MATERIAL/EQUIPMENT TO BE DEMOLISHED AND REMOVED, U.O.N.
4. CONTRACTOR SHALL FIELD VERIFY ALL MEASUREMENTS AT THE SITE AND SHALL BE RESPONSIBLE FOR THEIR ACCURACY PRIOR TO STARTING ANY WORK OR ORDERING ANY MATERIAL.

KEY NOTES

1. PULL THE (E) CABLES OUT OF THE (E) PULLBOX FOR LATER RECONNECTION. REMOVE THE (E) PULLBOX AND (E) 4" CONDUIT. SEE DRAWINGS E5 & E6 FOR DETAILS.
2. PROVIDE NEW 15kV, 1200A SWITCHGEAR WITH VACUUM CIRCUIT BREAKER VCB080, CPT, VT AND ALL ACCESSORIES PER SPECIFICATION SECTION 26 13 00.00 20.
3. PROVIDE NEW INDOOR DRY TYPE TRANSFORMER T14, ELECTROSTATIC SHIELDED, TOTALLY ENCLOSED, INCLUDING ALL ACCESSORIES PER SPECIFICATION SECTIONS 26 11 16 & 26 12 00.00 40.

REGISTERED PROFESSIONAL ENGINEER
JAMES T. McCUSKER
No. ED13699
ELECTRICAL
STATE OF CALIFORNIA

Approved for Construction
Moffett Field Permit Board
Chief Building Official
Permit No. 11P038

ZONE	LETTER	DESCRIPTION	DRAWN	DATE	APPRVD

REVISIONS

DRAWN N.NIZAMOVA		DATE 9/21/11
DESIGNED N.NIZAMOVA		DATE 9/21/11
CHECKED J.McCUSKER		DATE 9-27-11
PROJMGR F.JONES		DATE 9.23.11
REQUESTER D.TRAN		DATE 9/22/11
R&QA		DATE
SAFETY		DATE
SUPERVISOR S.FRANKEL	OCT 27 2011	DATE

Ames Research Center
Moffett Field, California

RESTORATION OF ELECTRICAL DISTRIBUTION SYSTEM-HIGH VOLTAGE WP1
N213 WEST INDOOR SUBSTATION
ELECTRICAL

SITE PLANS
DEMOLITION & NEW WORK

SIZE	CAGE CODE	DWG NO.	REV
D	25307	A1---1001-E4	
SCALE		INDEX	SHEET 1 OF 1

FILE NAME: A1---1001-004_1_RHV.DWG 9-21-11

60176753.0001

DWG: \\N213FS2\Proj\REDS\60176753 (K10018)_REDS - High Voltage\500 CAD\REDS_HV-WP1\N213-Substation\E\Sheet\A1---1001-E004_1_RHV.dwg Version: 17.1s (LMS Tech) User: poldenb
DATE: Sep 21, 2011 - 3:31:07 pm

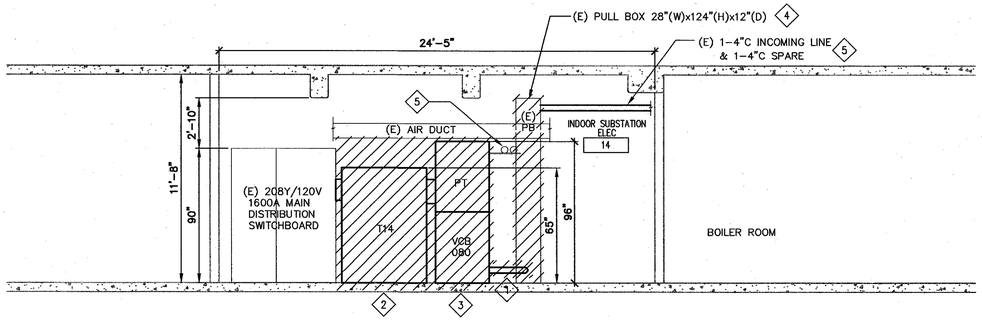

A ELEVATION-DEMOLITION
E5 E5
SCALE: 1/4"=1'-0"

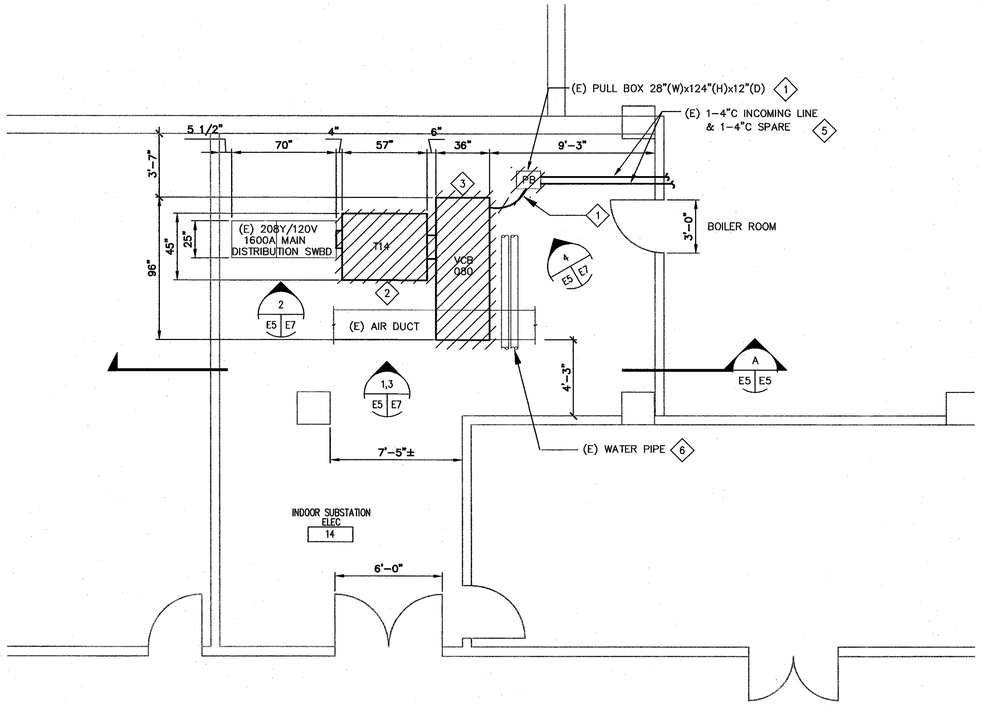

1 EQUIPMENT PLAN - DEMOLITION
E4 E5
SCALE: 1/4"=1'-0"

1/4"=1' 0 2 4 8 12

SHEET NOTES

1. FOR GENERAL NOTES, SYMBOLS AND ABBREVIATIONS, SEE DRAWING G4.
2. HATCHED LINES INDICATE EXISTING MATERIAL/EQUIPMENT TO BE DEMOLISHED AND REMOVED U.O.N.
3. ALL EXISTING CONDUITS AND CONDUCTORS SHALL BE DISCONNECTED FROM (E) EQUIPMENT TO BE DEMOLISHED AND RECONNECTED TO NEW EQUIPMENT, CONTRACTOR SHALL DETERMINE IN FIELD AND RELOCATE/EXTEND OR REPLACE (E) CONDUITS AND CONDUCTORS (MATCH EXISTING SIZE) TO COMPLETE CONNECTIONS TO NEW AND EXISTING EQUIPMENT.
4. EXISTING GROUNDING SYSTEM TO REMAIN FOR RECONNECTION IN NEW WORK.
5. PRIOR TO SHUTDOWN AND DEMOLITION WORK, CONTRACTOR SHALL PERFORM PHASE SEQUENCE TEST ON EXISTING SYSTEM/EQUIPMENT IN THE PRESENCE OF COTR.

KEY NOTES

1. PULL THE (E) CABLES BACK TO THE (E) PULLBOX FOR LATER RECONNECTION. REMOVE (E) PULLBOX AND (E) 4" CONDUIT.
2. REMOVE (E) TRANSFORMER T14 AND ASSOCIATED EQUIPMENT.
3. REMOVE (E) 8kV VCB080 SWITCHGEAR AND ALL ASSOCIATED EQUIPMENT.
4. DEMOLISH EXISTING PULL BOX.
5. CAP AND SEAL EXISTING SPARE 4" CONDUIT AFTER DEMOLITION OF PULL BOX.
6. EXISTING WATER PIPE SHALL BE REROUTED BY MECHANICAL. SEE M4 FOR NEW WATER PIPE LAYOUT.

REGISTERED PROFESSIONAL ENGINEER JAMES T. McCUSKER No. ED13699 ELECTRICAL STATE OF CALIFORNIA

Approved for Construction
Moffett Field Permit Board
Chief Building Official
Permit No. 11P038

ZONE	LETTER	DESCRIPTION	DRAWN	DATE	APPRVD
		REVISIONS			

DRAWN P.ALDEN	DATE 9.22.11	
DESIGNED N.NIZAMOVA	DATE 9/21/11	
CHECKED J.McCUSKER	DATE 9-21-11	
PROJMGR F.JONES	DATE 9.23.11	
REQUESTER D.TRAN	DATE 9/21/11	
R&QA	DATE	
SAFETY	DATE	
SUPERVISOR S.FRANKEL	DATE OCT 21 2011	

Ames Research Center
Moffett Field, California

RESTORATION OF ELECTRICAL DISTRIBUTION SYSTEM-HIGH VOLTAGE WP1
N213 WEST INDOOR SUBSTATION
ELECTRICAL

EQUIPMENT PLAN & ELEVATION DEMOLITION

SIZE	CAGE CODE	DWG NO.	REV
D	25307	A1---1001-E5	
SCALE		INDEX SHEET 1 OF 1	

FILE NAME: A1---1001-005_1_R7.DWG 9-21-11

60176753.0001

DWG: \\N213FS2\Proj\REDS\60176753 (K10018)_REDS - High Voltage\500 CAD\REDS_HV-WP1\N213-Substation\E\Sheet\A1---1001-E005_1_R1H.dwg Version: 17.1s (LMS Tech) User: palden
DATE: Sep 21, 2011 - 3:32:36 pm

DWG NO.	SH.	REV
A1---1001-E6	1	

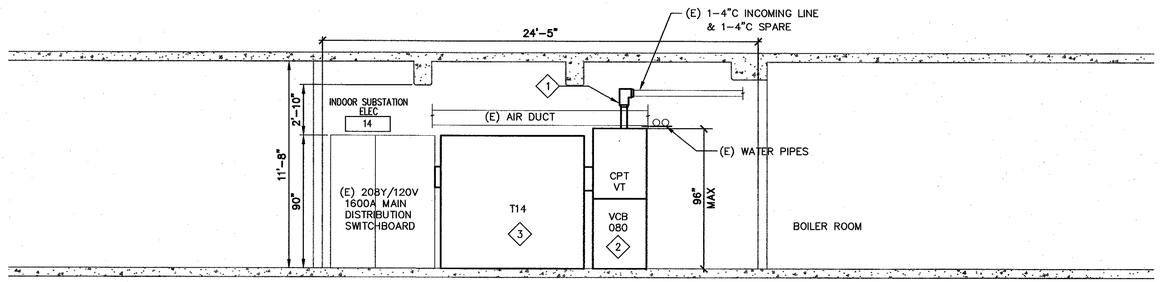

A
E6 E6 ELEVATION – NEW WORK
SCALE: 1/4"=1'-0"

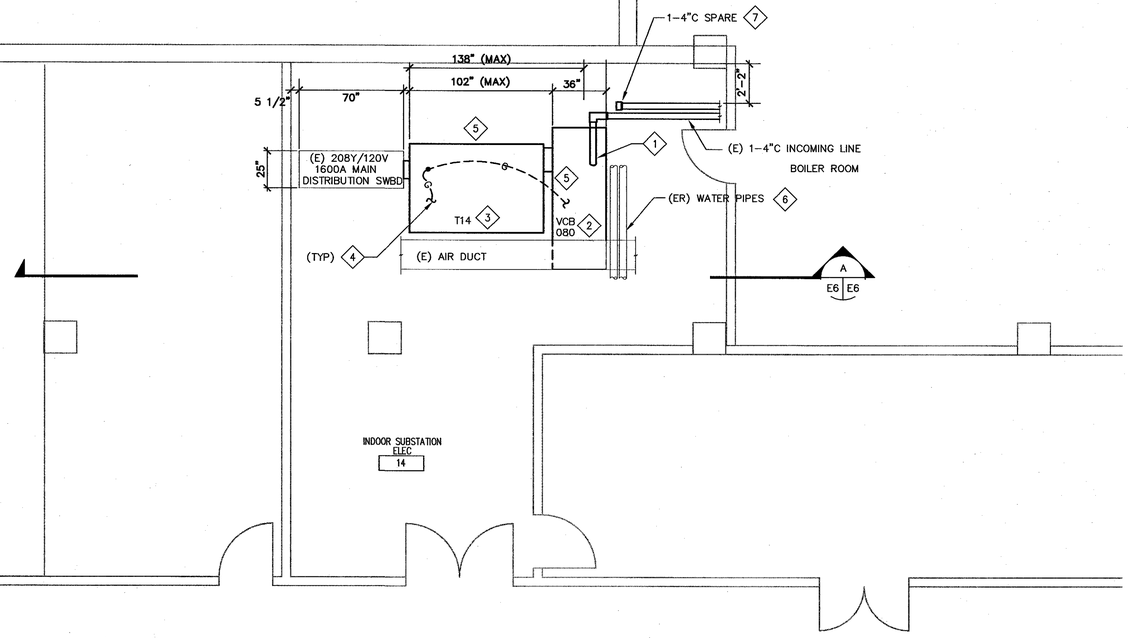

1 E4 E6 EQUIPMENT PLAN – NEW WORK
SCALE: 1/4"=1'-0"

1/4"=1' 0 2 4 8 12

SHEET NOTES

1. FOR GENERAL NOTES, SYMBOLS AND ABBREVIATIONS, SEE DRAWING G4.
2. HEAVY LINES INDICATE NEW MATERIAL/EQUIPMENT TO BE PROVIDED. LIGHT LINES DENOTE EXISTING CONDITIONS, MATERIALS AND EQUIPMENT TO REMAIN.
3. CONTRACTOR SHALL FIELD VERIFY ALL MEASUREMENTS AT THE SITE AND SHALL BE RESPONSIBLE FOR THEIR ACCURACY PRIOR TO STARTING ANY WORK OR ORDERING ANY MATERIAL.
4. ALL OUTDOOR EQUIPMENT SHALL BE NEMA 3R.
5. ALL EXISTING CONDUITS AND CONDUCTORS SHALL BE RECONNECTED TO NEW EQUIPMENT. CONTRACTOR SHALL DETERMINE IN THE FIELD AND PROVIDE PULL BOXES AND RELOCATE, EXTEND OR REPLACE (E) CONDUIT AND CONDUCTORS (MATCH EXISTING SIZE) TO COMPLETE CONNECTIONS TO NEW AND EXISTING EQUIPMENT.
6. DIMENSION SHOWN ARE FOR GUIDANCE ONLY. CONTRACTOR SHALL VERIFY CONDUIT STUB-UP & EQUIPMENT DIMENSIONS BEFORE INSTALLATION.
7. ELECTRICAL EQUIPMENT AND RACEWAYS SHALL BE SUPPORTED AND ANCHORED IN ACCORDANCE WITH CALIFORNIA BUILDING CODE SEISMIC REQUIREMENTS.

KEY NOTES

1. PROVIDE NEW LB CONDULET AND 4"C FROM (E)4"C INCOMING LINE TO NEW VCB080. RECONNECT THE (E) 15kV 350kCMIL EPR CABLES AND #4/0 GND. TO NEW SWGR VCB080.
2. PROVIDE NEW 15kV, 1200A SWITCHGEAR WITH VACUUM CIRCUIT BREAKER VCB080, CPT, VT AND ALL ACCESSORIES PER SPECIFICATION SECTION 26 13 00.00 20.
3. PROVIDE NEW INDOOR DRY TYPE TRANSFORMER T14, ELECTROSTATIC SHIELDED, TOTALLY ENCLOSED, INCLUDING ALL ACCESSORIES PER SPECIFICATION SECTIONS 26 11 16 & 26 12 00.00 40.
4. CONNECT NEW EQUIPMENT TO EXISTING GROUNDING SYSTEM WITH # 4/0 BARE COOPER CONDUCTOR.
5. 1/2"ø THREADED ROD W/ HILTI RE-500 SD ADHESIVE ANCHOR, MIN. 4" EMBEDMENT (TOTAL OF 4 PER EQUIPMENT/CABINET).
6. REFER TO MECHANICAL DRAWING ON SHEET M4 FOR NEW WATER PIPE LAYOUT.
7. CAP AND SEAL EXISTING SPARE 4" CONDUIT AFTER DEMOLITION OF PULL BOX.

REGISTERED PROFESSIONAL ENGINEER
JAMES T. McCUSKER
No. E013699
ELECTRICAL
STATE OF CALIFORNIA

Approved for Construction
Moffett Field Permit Board
Chief Building Official
Permit No. 11P038

ZONE	LETTER	DESCRIPTION	DRAWN	DATE	APPRVD

REVISIONS

DRAWN P.ALDEN		DATE 9.22.11
DESIGNED N.NIZAMOVA		DATE 9/21/11
CHECKED J.McCUSKER		DATE 9-21-11
PROJMGR F.JONES		DATE 9.23.11
REQUESTER D.TRAN		DATE 9/26/11
R&QA		DATE
SAFETY		DATE
SUPERVISOR S.FRANKEL	OCT 21 2011	DATE

Ames Research Center
Moffett Field, California

RESTORATION OF ELECTRICAL DISTRIBUTION SYSTEM-HIGH VOLTAGE WP1
N213 WEST INDOOR SUBSTATION
ELECTRICAL

EQUIPMENT PLAN & ELEVATION NEW WORK

SIZE	CAGE CODE	REV
D	25307	A 1---1001-E6
SCALE		INDEX SHEET 1 OF 1

FILE NAME: A1---1001-E006_1_R7.DWG 9-21-11

60176753.0001

DWG: \\N213FS2\Proj\REDS\60176753 (K10018)_REDS - High Voltage\500 CAD\REDS_HV-WP1\N213-Substation\E\Sheet\A1---1001-E006_1_RHV.dwg Version: 17.1s (LMS Tech) User: polden
DATE: Sep 20, 2011 - 5:22:26 pm

DWG NO.	SH.	REV
A1---1001-E7	1	

SHEET NOTES

1. FOR GENERAL NOTES, SYMBOLS AND ABBREVIATIONS, SEE DRAWING G4.
2. HATCHED LINES INDICATE EXISTING MATERIALS AND EQUIPMENT TO BE DEMOLISHED AND REMOVED.
3. SEE DRAWING E5 FOR EQUIPMENT LAYOUT–EXISTING/DEMOLITION.

KEY NOTES

1. DISCONNECT AND REMOVE THE EXISTING TRANSFORMER T14 AND VCB080.
2. THE EXISTING LOW VOLTAGE DISTRIBUTION SWITCHBOARD SHALL REMAIN.
3. MINIMIZE DISTURBANCE OF EXISTING OVERHEAD CONDUITS, PIPES AND EQUIPMENT SURROUNDING THE SUBSTATION.
4. PULL THE (E) CABLES OUT OF THE (E) PULLBOX FOR LATER RECONNECTION. REMOVE THE (E) PULLBOX AND (E) 4" CONDUIT. SEE DRAWINGS E5 & E6 FOR DETAILS.

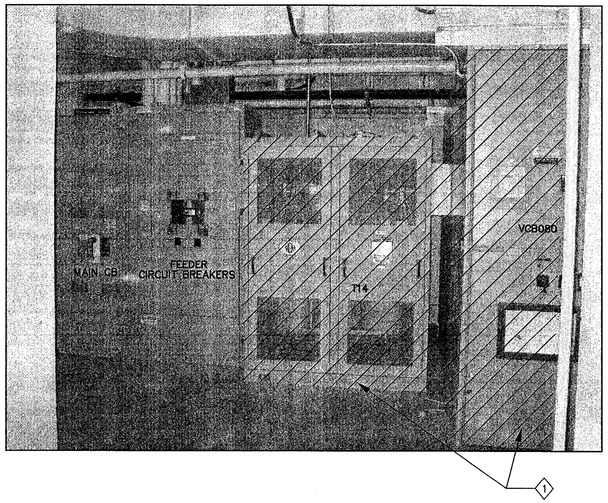

1 E5 | E7 SUBSTATION ELEVATION VIEW
SCALE: NTS

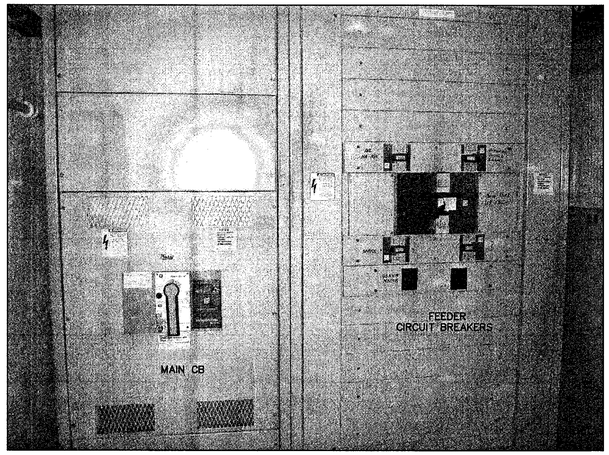

2 E5 | E7 LOW VOLTAGE MAIN DISTRIBUTION SWBD ELEVATION VIEW 2
SCALE: NTS

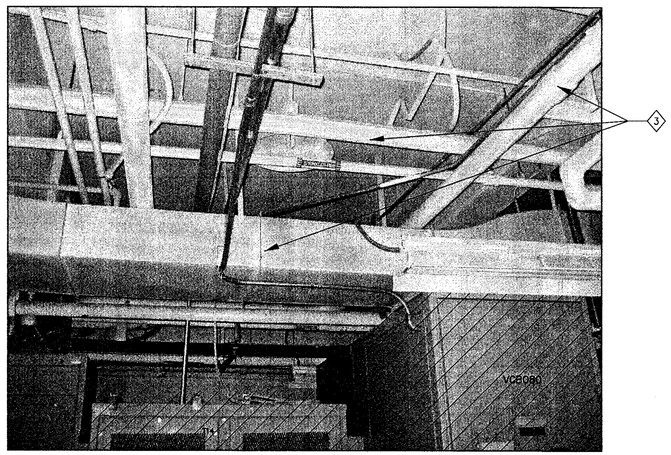

3 E5 | E7 SPACE ABOVE TRANSFORMER T14 AND VCB080
SCALE: NTS

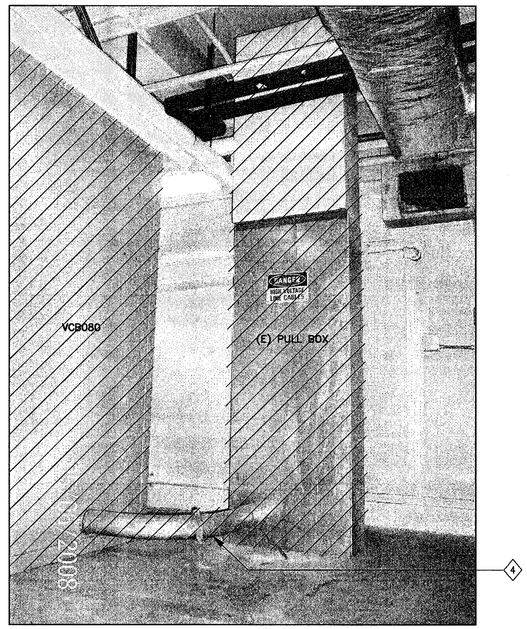

4 E5 | E7 (E) PULL BOX ELEVATION VIEW
SCALE: NTS

Approved for Construction
Moffett Field Permit Board

Chief Building Official
Permit No. 11P038

ZONE	LETTER	DESCRIPTION	DRAWN	DATE	APPRVD

REVISIONS

DRAWN N.NIZAMOVA	DATE 9/27/11	Ames Research Center, Moffett Field, California
DESIGNED N.NIZAMOVA	DATE 9/21/11	RESTORATION OF ELECTRICAL DISTRIBUTION SYSTEM–HIGH VOLTAGE WP1 N213 WEST INDOOR SUBSTATION ELECTRICAL
CHECKED J.McCUSKER	DATE 9-21-11	PHOTOGRAPHIC DETAILS DEMOLITION
PROJMGR E.JONES	DATE 9/23/11	
REQUESTER D.TRAN	DATE 9/26/11	
R&QA	DATE	
SAFETY	DATE	
SUPERVISOR S.FRANKEL	DATE OCT 13 2011	SIZE D; CAGE CODE 25307; A1---1001-E7; REV
	DATE	SCALE; INDEX; SHEET 1 OF 1

FILE NAME: A1---1001-E007_1_R7.DWG 9-21-11

60176753.0001

REGISTERED PROFESSIONAL ENGINEER JAMES T. McCUSKER No. E013699 ELECTRICAL STATE OF CALIFORNIA

DWG: \\N213FS2\Proj\REDS\60176753 (K10018)_REDS - High Voltage\500 CAD\REDS_HV-WP1\N213-Substation\E\Sheet\A1---1001-E007_1_RHV.dwg Version: 17.1s (LMS Tech) User: palden
DATE: Sep 21, 2011 - 3:36:41 pm

DWG NO.	SH.	REV
A1---1001-E8	1	

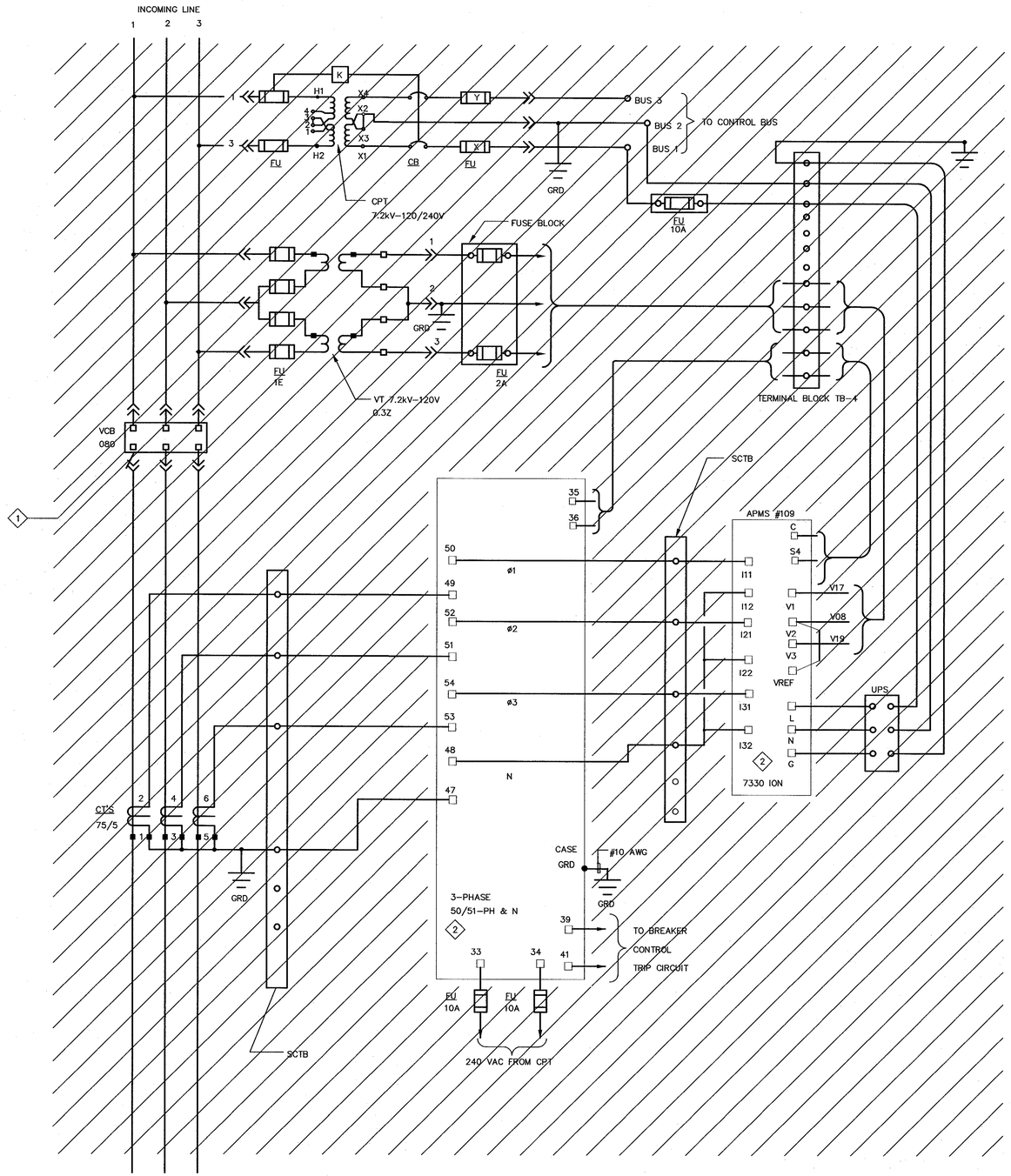

1 THREE LINE DIAGRAM-DEMOLITION
SCALE: N.T.S.

SHEET NOTES

1. FOR GENERAL NOTES, SYMBOLS AND ABBREVIATIONS, SEE DRAWING G4.
2. NOT ALL CONDUITS AND CONDUCTORS ARE SHOWN ON DWG.
3. HATCHED LINES INDICATE EXISTING MATERIALS AND EQUIPMENT TO BE DEMOLISHED AND REMOVED.
4. THE DIAGRAM IS PROVIDED FOR GUIDANCE ONLY. THE CONTRACTOR SHALL FIELD VERIFY ALL EXISTING EQUIPMENT INCLUDING TERMINAL BLOCKS, TERMINAL IDENTIFICATION NUMBER, CONNECTIONS ETC. AND REVISE DRAWINGS AS NEEDED TO MATCH EXISTING AND NEW EQUIPMENT TO PROVIDE A COMPLETE FUNCTIONAL SYSTEM.

KEY NOTES

1. DISCONNECT AND REMOVE EXISTING VCB SWITCHGEAR AND ALL ASSOCIATED DEVICES AND ACCESSORIES.
2. REMOVE, PROTECT FROM DAMAGE AND TURN OVER TO THE GOVERNMENT.

Approved for Construction
Moffett Field Permit Board

Chief Building Official
Permit No. 11P038

ZONE	LETTER	DESCRIPTION	DRAWN	DATE	APPRVD

REVISIONS

DRAWN N.NIZAMOVA		DATE 9/21/11
DESIGNED N.NIZAMOVA		DATE 9/21/11
CHECKED J.McCUSKER		DATE 9-21-11
PROJMGR F.JONES		DATE 9.23.11
REQUESTER D.TRAN		DATE 9/26/11
R&QA		DATE
SAFETY		DATE
SUPERVISOR S.FRANKEL		DATE OCT 21 2011

REGISTERED PROFESSIONAL ENGINEER JAMES T. McCUSKER No. E013699 ELECTRICAL STATE OF CALIFORNIA

Ames Research Center
Moffett Field, California

RESTORATION OF ELECTRICAL DISTRIBUTION SYSTEM-HIGH VOLTAGE WP1
N213 WEST INDOOR SUBSTATION
ELECTRICAL

THREE LINE DIAGRAM DEMOLITION

SIZE	CAGE CODE	REV
D	25307	A 1---1001-E8
SCALE	INDEX	SHEET 1 OF 1

FILE NAME: A1---1001-E008_1_R7.DWG 9-21-11

60176753.0001

DWG: \\N213FS2\Proj\REDS\60176753 (K10018)_REDS - High Voltage\500 CAD\REDS_HV-WP1\N213-Substation\E\Sheet\A1---1001-E008_1_RHV.dwg Version: 17.1s (LMS Tech) User: palden
DATE: Sep 20, 2011 - 5:22:37 pm

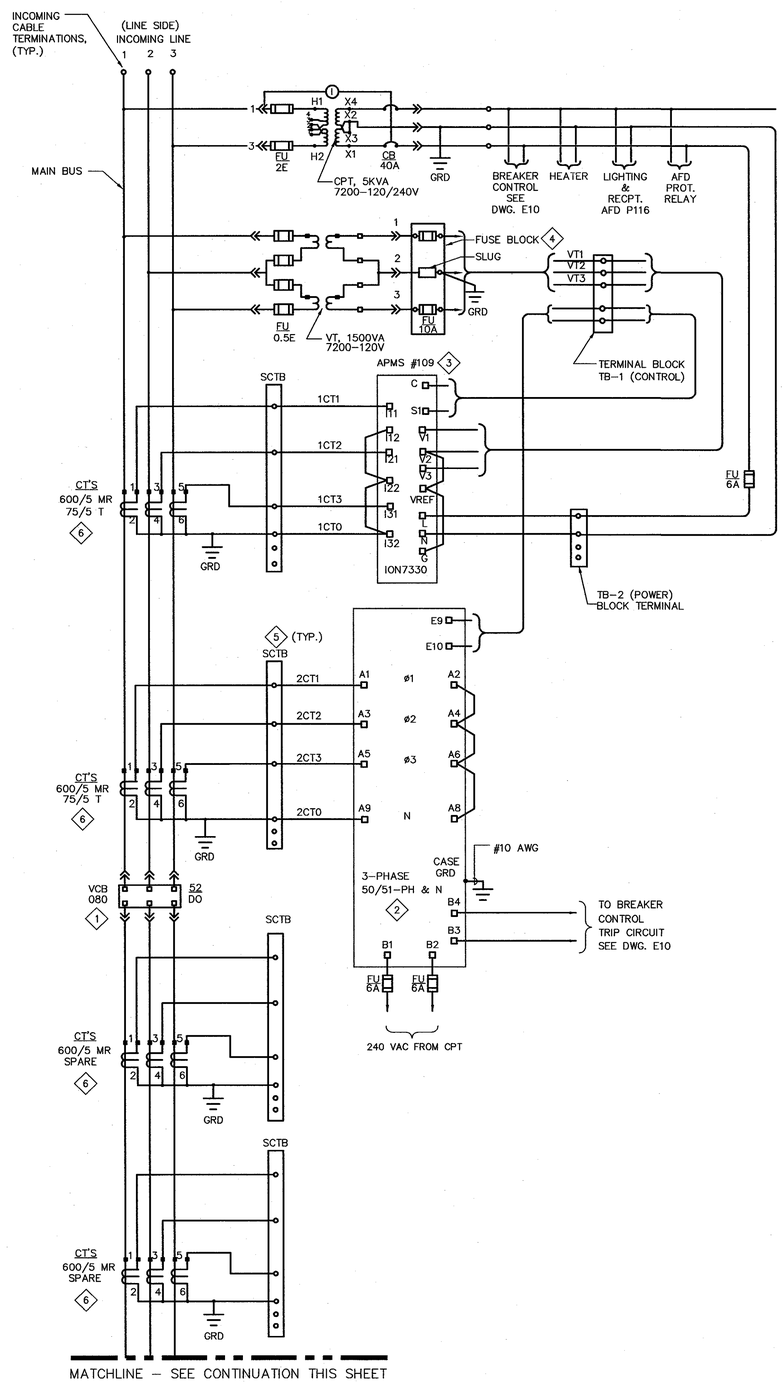

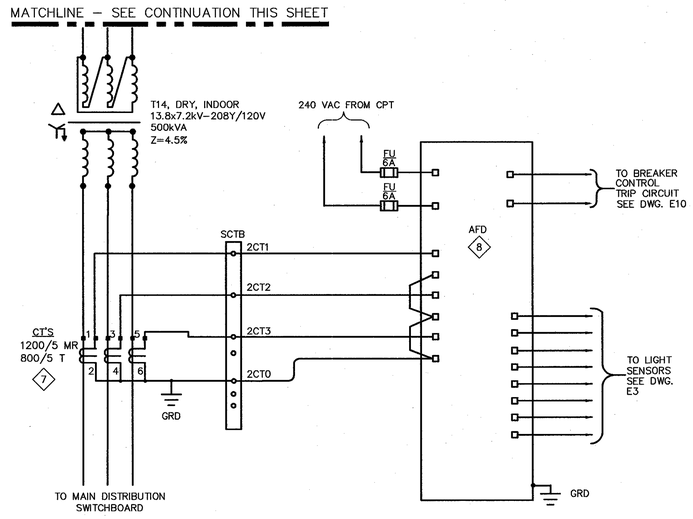

1 THREE LINE DIAGRAM–NEW WORK
SCALE: N.T.S.

SHEET NOTES

1. FOR GENERAL NOTES, SYMBOLS AND ABBREVIATIONS, SEE DRAWING G4.
2. DARK OR HEAVY LINES INDICATE NEW MATERIAL/EQUIPMENT TO BE PROVIDED. U.O.N.
3. THE DIAGRAM IS PROVIDED FOR GUIDANCE ONLY. THE CONTRACTOR SHALL FIELD VERIFY ALL EXISTING EQUIPMENT INCLUDING TERMINAL BLOCKS, TERMINAL IDENTIFICATION NUMBER, CONNECTIONS ETC. AND REVISE DRAWINGS AS NEEDED TO MATCH EXISTING AND NEW EQUIPMENT TO PROVIDE A COMPLETE FUNCTIONAL SYSTEM.
4. ALL CT WIRES SHALL BE #10 AWG MINIMUM, TYPE SIS. ALL VOLTAGE, CPT SECONDARY AND BREAKER TRIP WIRES SHALL BE #12 AWG MINIMUM, TYPE SIS. U.O.N.

KEY NOTES

1. PROVIDE NEW 15KV, 1200A SWITCHGEAR WITH 15KV VACUUM CIRCUIT BREAKER AND ACCESSORIES PER SPECIFICATION.
2. INSTALL GFE ALSTOM RELAY COMPLETELY WIRED INTO THE NEW EQUIPMENT.
3. INSTALL GFE DIGITAL POWER METER COMPLETELY WIRED INTO THE NEW EQUIPMENT.
4. PROVIDE FUSE BLOCK, FLEXCORE KLK–3 OR APPROVED EQUAL.
5. PROVIDE (4) CIRCUIT SHORTING TERMINAL BLOCKS (SCTB), FLEXCORE 1KU6SC OR APPROVED EQUAL.
6. PROVIDE (2) SETS OF 3 WINDOW–TYPE MULTI–RATIO CT'S ON THE LINE SIDE OF THE BREAKER. PROVIDE (2) ADDITIONAL SPARE SETS OF CT'S ON THE LOAD SIDE OF THE BREAKER. ALL CT'S SHALL BE C200 ACCURACY.
7. PROVIDE (1) SET OF 3 WINDOW–TYPE MULTI–RATIO CT'S ON THE LOAD SIDE OF THE TRANSFORMER. CT'S SHALL BE C400 ACCURACY.
8. INSTALL ARC FLASH DETECTOR COMPLETELY WIRED INTO THE NEW SWITCHGEAR. INSTALLATION SHALL BE IN ACCORDANCE WITH MANUFACTURER'S RECOMENDATIONS.

Approved for Construction
Moffett Field Permit Board
Chief Building Official
Permit No. 11P038

ZONE	LETTER	DESCRIPTION	DRAWN	DATE	APPRVD

REVISIONS

DRAWN N.NIZAMOVA	DATE 9/21/11	Ames Research Center, Moffett Field, California
DESIGNED N.NIZAMOVA	DATE 9/21/11	RESTORATION OF ELECTRICAL DISTRIBUTION SYSTEM–HIGH VOLTAGE WP1
CHECKED J.McCUSKER	DATE 9-21-11	N213 WEST INDOOR SUBSTATION
PROJMGR F.JONES	DATE 9.23.11	ELECTRICAL
REQUESTER D.TRAN	DATE 9/21/11	THREE LINE DIAGRAM NEW WORK
R&QA	DATE	
SAFETY	DATE	
SUPERVISOR S.FRANKEL	DATE OCT 21 2011	

REGISTERED PROFESSIONAL ENGINEER — JAMES T. McCUSKER — No. ED13699 — ELECTRICAL — STATE OF CALIFORNIA

SIZE	CAGE CODE	DWG NO.	REV
D	25307	A1---1001-E9	
SCALE		INDEX	SHEET 1 OF 1

FILE NAME: A1---1001-E009_1_R7.DWG 9-21-11

60176753.0001

DWG: \\N213FS2\Proj\REDS\60176753 (K10016)_REDS - High Voltage\500 CAD\REDS_HV-WP1\N213-Substation\E\Sheet\A1---1001-E009_1_R7.dwg Version: 17.1s (LMS Tech) User: pohden
DATE: Sep 20, 2011 - 5:22:42 pm

DWG NO. A1---1001-E10 | SH. 1 | REV

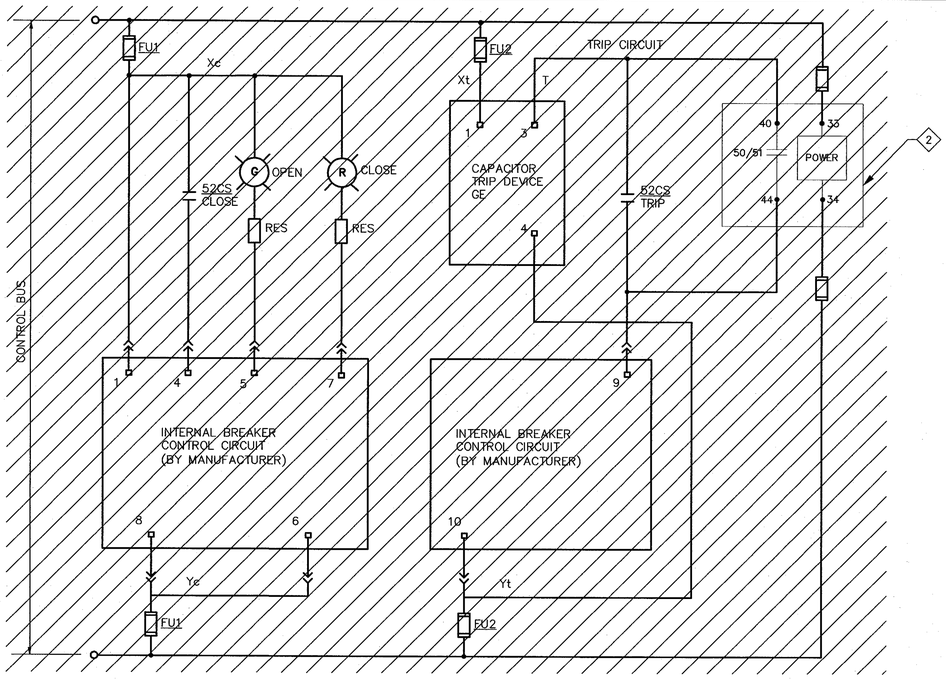

1 VCB080 BREAKER CONTROL DIAGRAM – DEMOLITION ◇1
SCALE: NTS

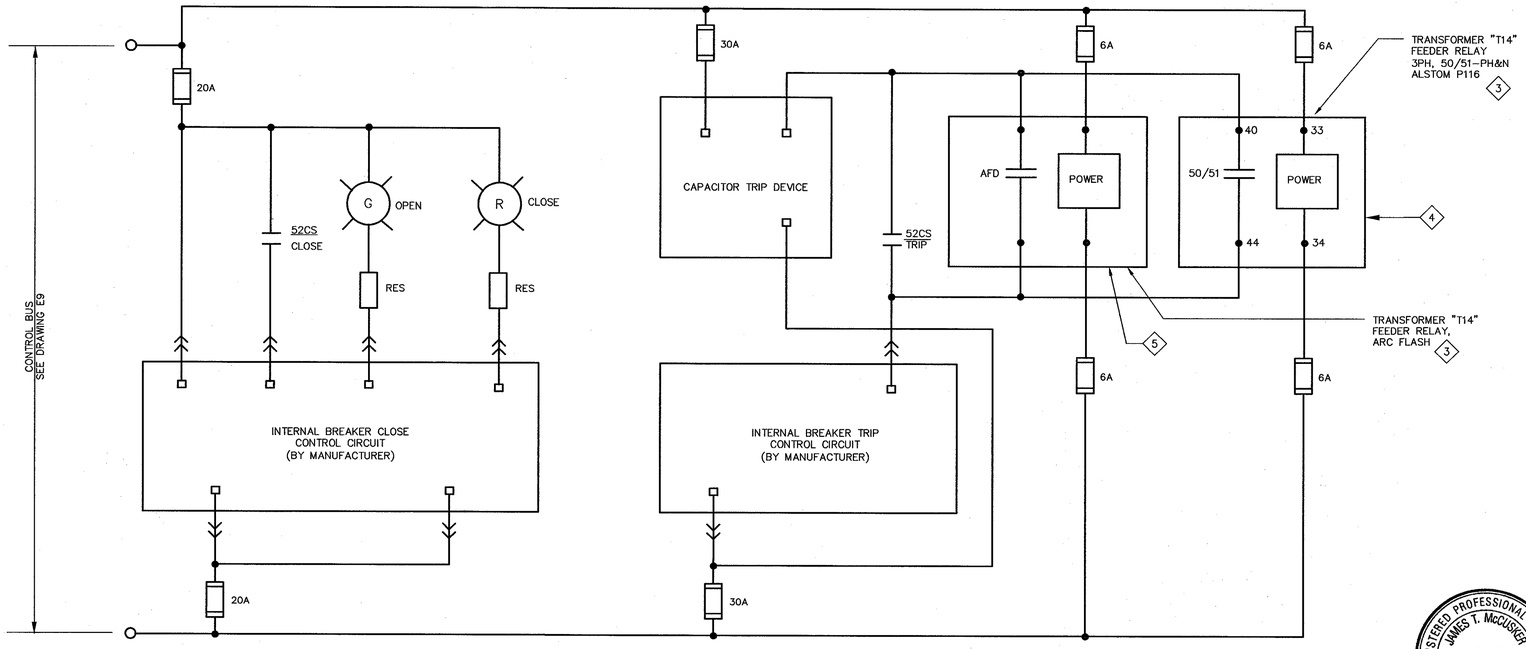

2 VCB080 BREAKER CONTROL DIAGRAM – NEW WORK
SCALE: NTS

SHEET NOTES

1. FOR GENERAL NOTES, SYMBOLS AND ABBREVIATIONS, SEE DRAWING G4.
2. HATCHED LINES INDICATE EXISTING MATERIAL/EQUIPMENT TO BE DEMOLISHED AND REMOVED. U.O.N.
3. DARK OR HEAVY LINES INDICATE NEW MATERIAL/EQUIPMENT TO BE PROVIDED. U.O.N.
4. THE DIAGRAMS ARE PROVIDED FOR GUIDANCE ONLY. THE CONTRACTOR SHALL FIELD VERIFY ALL EXISTING EQUIPMENT INCLUDING TERMINAL BLOCKS, TERMINAL IDENTIFICATION NUMBER, CONNECTIONS ETC. AND REVISE DRAWINGS AS NEEDED TO MATCH EXISTING AND NEW EQUIPMENT TO PROVIDE A COMPLETE FUNCTIONAL SYSTEM.
5. THE CONTROL DIAGRAM IS BASED ON THE LATEST KMOWN EXISTING DRAWINGS.
6. NEW TERMINAL MARKINGS ARE BASED ON CUTLER HAMMER INFORMATION.

KEY NOTES

◇1 DISCONNECT AND REMOVE EXISTING VCB080 SWITCHGEAR INCLUDING ALL ASSOCIATED DEVICES AND ACESSORIES.

◇2 REMOVE ALSTOM RELAY FROM (E) SWITCHGEAR AND TURN OVER TO THE GOVERNMENT.

◇3 TYPICAL BREAKER CONTROL DIAGRAM WITH THE RELATED TRANSFORMER FEEDER RELAY. FOR SUBSTATION ONE LINE DIAGRAM AND THREE LINE DIAGRAM, REFER TO THE DRAWINGS E3 AND E9 RESPECTIVELY.

◇4 INSTALL NEW GFE 3-PHASE MICROPROCESSOR BASED RELAY, ALSTOM MICOM P116, COMPLETELY WIRED INTO THE EQUIPMENT.

◇5 INSTALL NEW ARC FLASH DETECTOR COMPLETELY WIRED INTO THE EQUIPMENT.

Approved for Construction
Moffett Field Permit Board
Chief Building Official
Permit No. 11P038

ZONE	LETTER	DESCRIPTION	DRAWN	DATE	APPRVD

REVISIONS

DRAWN N.NIZAMOVA		DATE 9/9/11
DESIGNED N.NIZAMOVA		DATE 9/9/11
CHECKED J.McCUSKER		DATE 9-9-11
PROJMGR F.JONES		DATE 9.23.11
REQUESTER D.TRAN		DATE 9/26/11
R&QA		DATE
SAFETY		DATE
SUPERVISOR S.FRANKEL	OCT 21 2011	DATE

REGISTERED PROFESSIONAL ENGINEER JAMES T. McCUSKER No. E013699 ELECTRICAL STATE OF CALIFORNIA

Ames Research Center
Moffett Field, California

RESTORATION OF ELECTRICAL DISTRIBUTION SYSTEM-HIGH VOLTAGE WP1
N213 WEST INDOOR SUBSTATION
ELECTRICAL

VCB080 BREAKER CONTROL DIAGRAMS DEMOLITION & NEW WORK

SIZE	CAGE CODE	REV
D	25307	A
SCALE	INDEX	SHEET 1 OF 1

FILE NAME: A1---1001-E010_1_R7.DWG 9-21-11

60176753.0001

DWG: \\W213FS01\Proj\REDS\60176753 (K10018)_REDS - High Voltage\500 CAD\REDS_HV-WP1\N213-Substation\E\Sheet\A1---1001-E010_1_RHV.dwg Version: 17.1s (LMS Tech) User: polden
DATE: Sep 20, 2011 - 5:22:47 pm

DWG NO.	SH.	REV
A1---1001-M4	1	

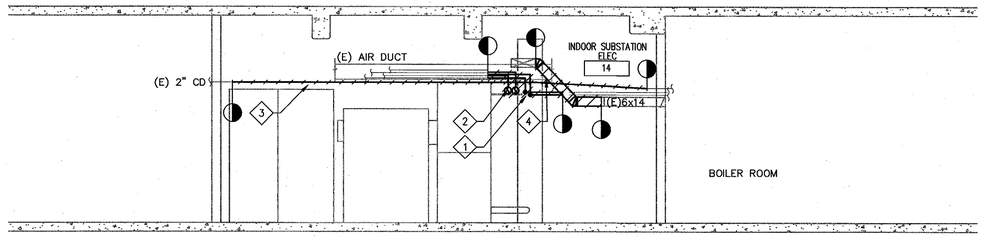

A ELEVATION–DEMOLITION
M4 M4 SCALE: 1/4"=1'-0"

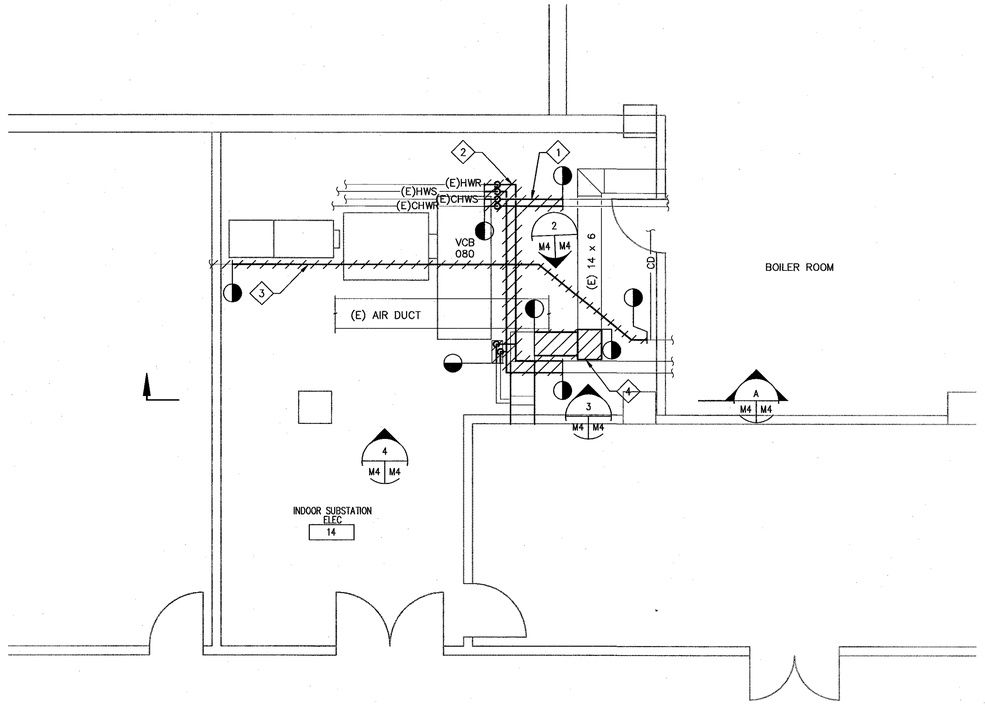

1 EQUIPMENT PLAN – DEMOLITION
M4 M4 SCALE: 1/4"=1'-0"

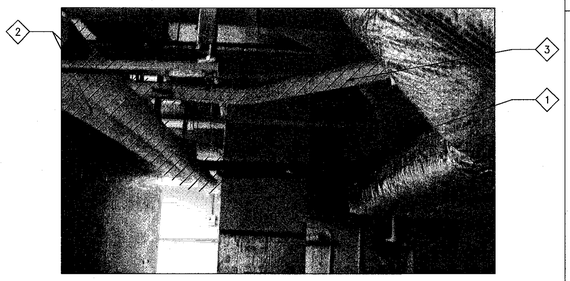

2 ELECTRICAL ROOM 14
M4 M4 SCALE: NTS

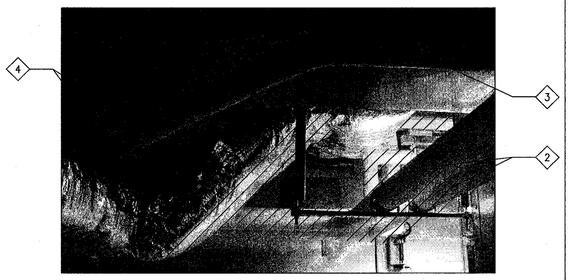

3 ELECTRICAL ROOM 14
M4 M4 SCALE: NTS

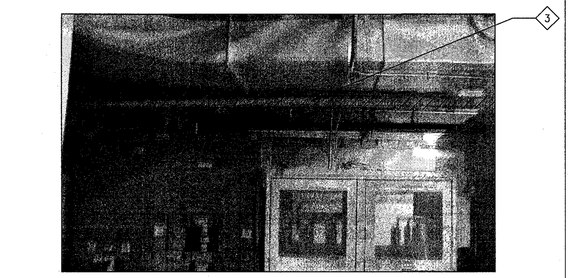

4 ELECTRICAL ROOM 14
M4 M4 SCALE: NTS

SHEET NOTES

1. REFER TO M1 FOR SYMBOLS, ABBREVIATIONS AND MECHANICAL NOTES.
2. CONTRACTOR SHALL FIELD VERIFY ALL MEASUREMENTS AND SHALL BE RESPONSIBLE FOR THEIR ACCURACY PRIOR TO STARTING ANY WORK OR ORDERING ANY MATERIAL.

KEY NOTES

1. REMOVE EXISTING 1" CHWS & CHWR PIPING TO THE POINT SHOWN. PREPARE PIPING FOR NEW CONNECTIONS. SEE PLAN FOR EXTEND OF DEMOLITION.
2. REMOVE EXISTING 2" HWS & HWR PIPING TO THE POINT SHOWN. PREPARE PIPING FOR NEW CONNECTIONS. SEE PLAN FOR EXTEND OF DEMOLITION.
3. REMOVE EXISTING 2" CD PIPING TO THE POINT SHOWN. PREPARE PIPING FOR NEW CONNECTION. SEE PLAN FOR EXTEND OF DEMOLITION.
4. REMOVE EXISTING DUCTWORK TO THE POINT SHOWN. PREPARE DUCTWORK FOR NEW CONNECTION. SEE PLAN FOR EXTEND OF DEMOLITION.

KEY PLAN

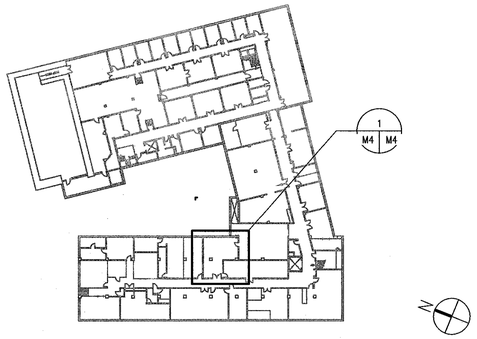

Approved for Construction
Moffett Field Permit Board

Chief Building Official
Permit No. 11P038

ZONE	LETTER	DESCRIPTION	DRAWN	DATE	APPRVD

REVISIONS

REGISTERED PROFESSIONAL ENGINEER
JIN F. XIANG
M 31092
Exp. 6/30/13
MECHANICAL ENGINEERING
STATE OF CALIFORNIA

1/4"=1' 0 2 4 8 12

DRAWN V.JAMNEJAD	DATE 9/21/11	
DESIGNED V.JAMNEJAD	DATE 9/21/11	
CHECKED J.XIANG	DATE 9/21/11	
PROJMGR F.JONES	DATE 9.23.11	
REQUESTER D.TRAN	DATE 9/26/11	
R&QA	DATE	
SAFETY	DATE	
SUPERVISOR S.FRANKEL	DATE OCT 21 2011	

Ames Research Center
Moffett Field, California

RESTORATION OF ELECTRICAL DISTRIBUTION SYSTEM–HIGH VOLTAGE WP1
N213 WEST INDOOR SUBSTATION
MECHANICAL

MECHANICAL PLAN & ELEVATION DEMOLITION WORK

SIZE	CAGE CODE		REV
D	25307	A 1---1001-M4	
SCALE		INDEX	SHEET 1 OF 1

FILE NAME: A1---1001-M4_1_R7.DWG 9-21-11

60176753.0001

DWG: \\N213FS2\Proj\REDS\60176753 (K10018)_REDS - High Voltage\500 CAD\REDS_HV-WP1\N213-Substation\M\Sheet\A1---1001-M4_RHV.dwg Version: 17.1s (LMS Tech) User: palden
DATE: Sep 21, 2011 - 1:50:55 pm

DWG NO. A1---1001-M5 | SH. 1 | REV

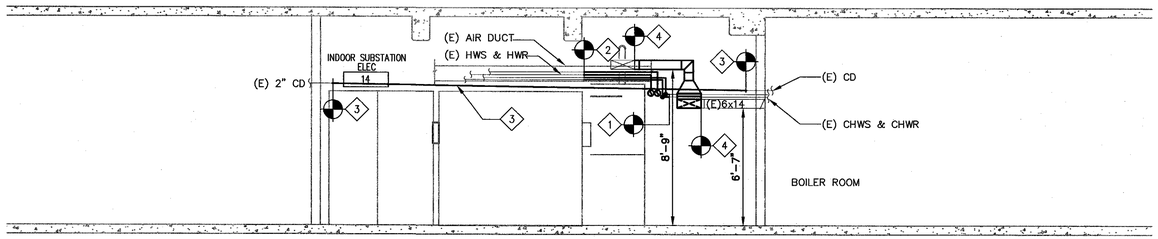

A / M5 | M5 ELEVATION – NEW WORK
SCALE: 1/4"=1'-0"

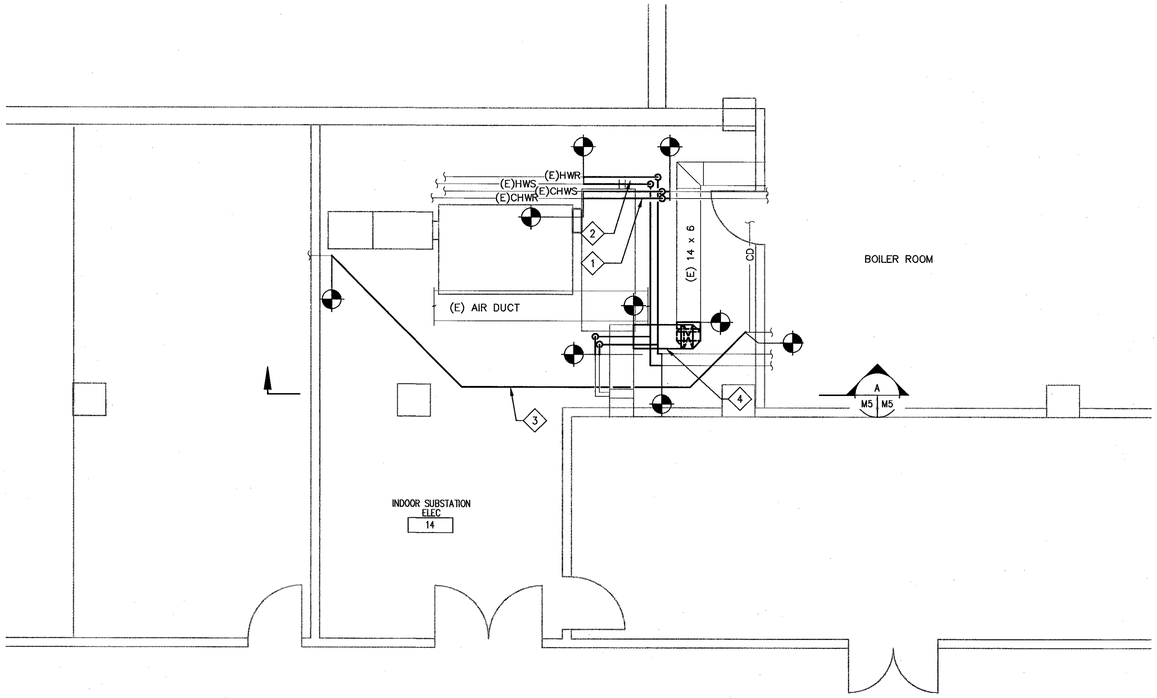

1 / M5 | M5 EQUIPMENT PLAN – NEW WORK
SCALE: 1/4"=1'-0"

1/4"=1" 0 2 4 8 12

SHEET NOTES

1. REFER TO M1 FOR SYMBOLS, ABBREVIATIONS AND MECHANICAL NOTES.
2. CONTRACTOR SHALL FIELD VERIFY ALL MEASUREMENTS AND SHALL BE RESPONSIBLE FOR THEIR ACCURACY PRIOR TO STARTING ANY WORK OR ORDERING ANY MATERIAL.

KEY NOTES

1. CONNECT NEW 1" SCHEDULE 40 SEAMLESS BLACK CARBON STEEL CHWS & CHWR TO THE POINT SHOWN.
2. CONNECT NEW 2" SCHEDULE 40 SEAMLESS BLACK CARBON STEEL HWS & HWR TO THE POINT SHOWN.
3. CONNECT AND RUN NEW 2 " SCHEDULE 40 SEAMLESS BLACK CARBON STEEL CONDENSATE DRAIN PIPING TO THE POINT SHOWN , RUN PIPING WITH THE SLOPE OF 1/8" PER FOOT. MAINTAIN A MINIMUM CLEARANCE OF 3'-0" IN FRONT OF THE NEW SWITCH GEAR.
4. CONNECT NEW 14x6 SUPPLY AIR DUCTWORK TO EXISTING DUCTWORK, SEE ELEVATION A/M5 FOR DUCT TRANSITION.

KEY PLAN

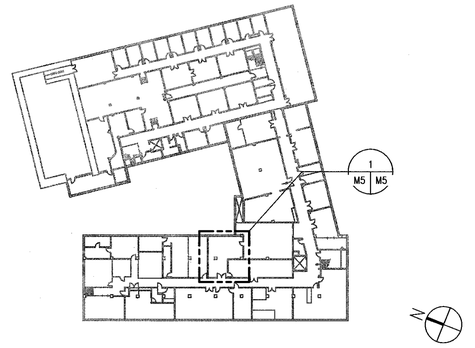

Approved for Construction
Moffett Field Permit Board
Chief Building Official
Permit No. 11P038

REGISTERED PROFESSIONAL ENGINEER
JIN F. XIANG
M 31002
MECHANICAL ENGINEER
STATE OF CALIFORNIA

ZONE	LETTER	DESCRIPTION	DRAWN	DATE	APPRVD

REVISIONS

DRAWN V.JAMNEJAD		DATE 9/21/11
DESIGNED V.JAMNEJAD		DATE 9/21/11
CHECKED J.XIANG		DATE 9/21/11
PROJMGR F.JONES		DATE 9.23.11
REQUESTER D.TRAN		DATE 9/22/11
R&QA		DATE
SAFETY		DATE
SUPERVISOR S.FRANKEL	OCT 21 2011	DATE

Ames Research Center
Moffett Field, California

RESTORATION OF ELECTRICAL DISTRIBUTION SYSTEM–HIGH VOLTAGE WP1
N213 WEST INDOOR SUBSTATION
MECHANICAL

MECHANICAL PLAN & ELEVATION NEW WORK

SIZE	CAGE CODE	REV
D	25307	A 1---1001-M5
SCALE	INDEX	SHEET 1 OF 1

FILE NAME: A1---1001-M5_1_R7.DWG 9-21-11

60176753.0001

DWG: \\N213\S2\Proj\WEDS\60176753 (K10016)_WEDS - High Voltage\500 CAD\WEDS_HV-WP1\N213-Substation\M\Sheet\A1---1001-M5_RHV.dwg Version: 17.1s (LMS Tech) User: pjdden
DATE: Sep 20, 2011 - 5:23:49 pm

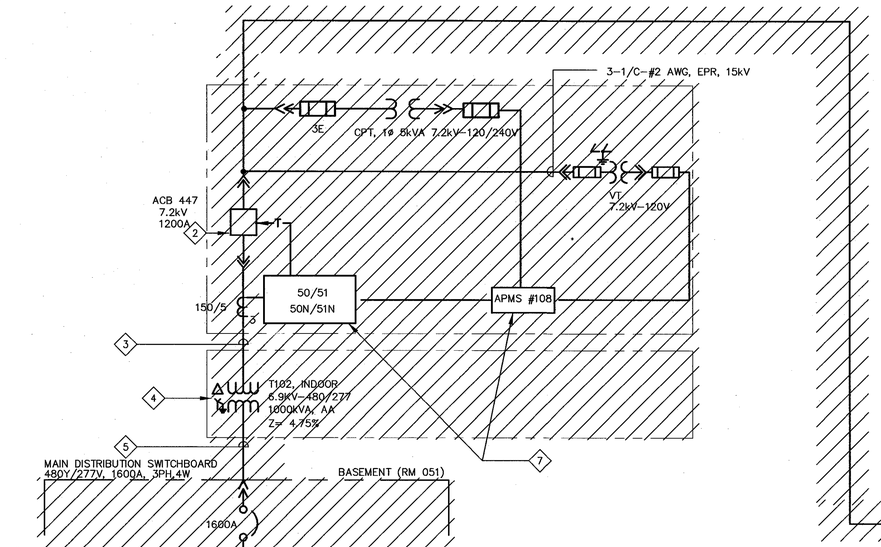

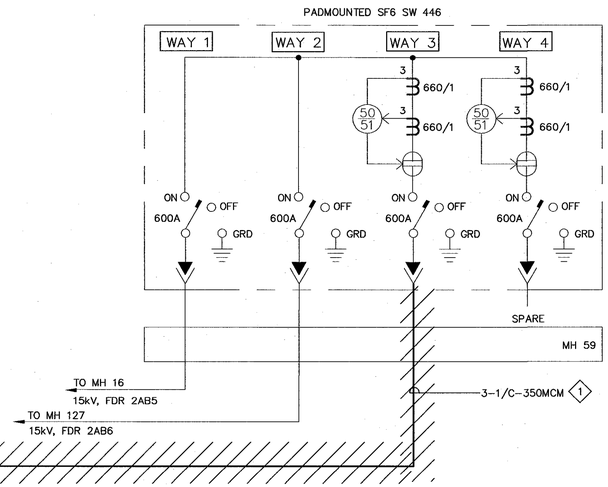

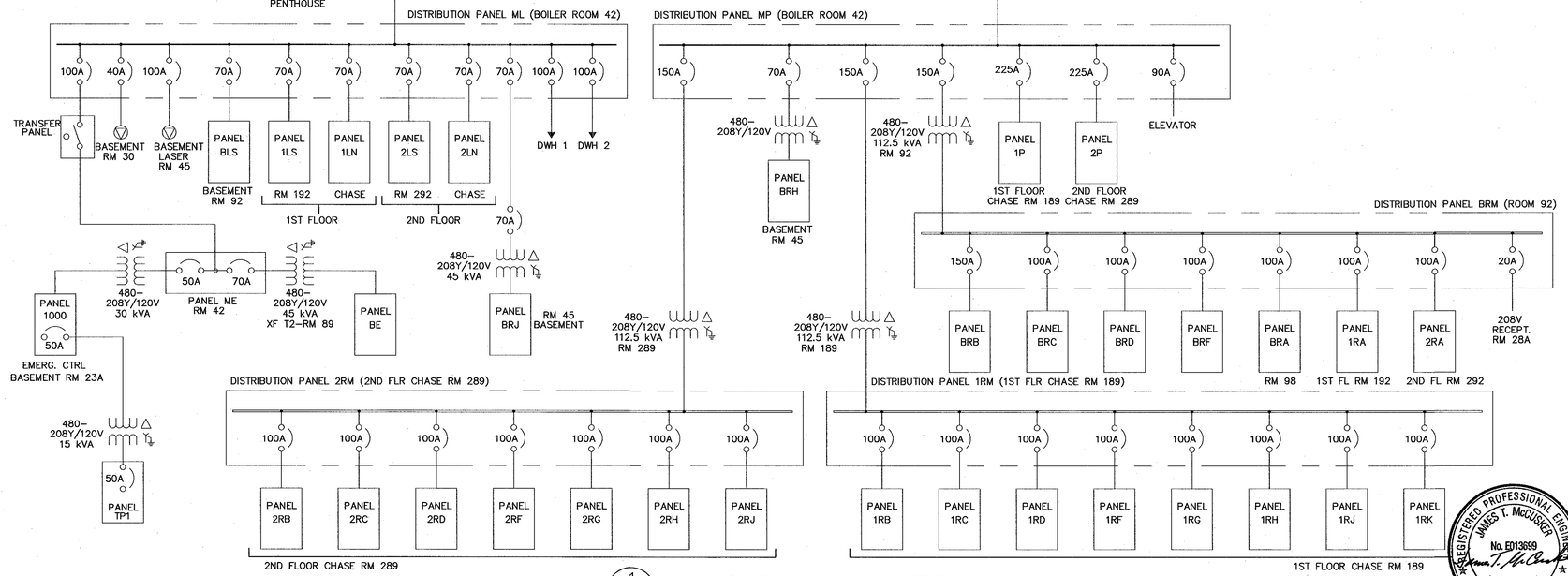

1 ONE LINE DIAGRAM-DEMOLITION
SCALE: NTS

SHEET NOTES

1. FOR GENERAL NOTES, SYMBOLS AND ABBREVIATIONS, SEE DRAWING G4.
2. NOT ALL CONDUITS AND CONDUCTORS ARE SHOWN ON THE DRAWING.
3. SINGLE LINE DIAGRAM IS BASED ON THE LATEST KNOWN EXISTING DRAWINGS.
4. HATCHED LINES INDICATE EXISTING MATERIAL AND EQUIPMENT TO BE DEMOLISHED/ REMOVED, U.O.N.
5. PRIOR TO SHUTDOWN AND DEMOLITION WORK, CONTRACTOR SHALL PERFORM PHASE SEQUENCE TEST ON EXISTING SYSTEM IN THE PRESENCE OF THE CONTRACTING OFFICER. ALL DISCONNECTED CABLES THAT ARE TO REMAIN SHALL BE PROPERLY IDENTIFIED, TAGGED FOR RESTORATION IN NEW WORK.

KEY NOTES

1. DISCONNECT AND REMOVE EXISTING INCOMING CABLE FROM SW 446 TO ACB447.
2. REMOVE EXISTING 7.2kV PRIMARY SWITCHGEAR AND CIRCUIT BREAKER ACB447 AND ALL ASSOCIATED EQUIPMENT AND DEVICES.
3. REMOVE CONNECTION (CABLE) BETWEEN ACB447 AND TRANSFORMER T102.
4. REMOVE EXISTING TRANSFORMER T102 AND ALL ASSOCIATED EQUIPMENT AND DEVICES, SEE DRAWING E14 FOR LAYOUT.
5. REMOVE CONNECTION BETWEEN TRANSFORMER T102 AND 480Y/277V DISTRIBUTION SWITCHBOARD.
6. REMOVE EXISTING 480Y/277V DISTRIBUTION SWITCHBOARD.
7. REMOVE, PROTECT FROM DAMAGE AND TURN OVER TO THE GOVERNMENT.
8. DISCONNECT (E) CABLE AND PROTECT FROM DAMAGE FOR RECONNECTION IN NEW WORK. SEE DRAWING E12.

Approved for Construction
Moffett Field Permit Board
Chief Building Official
Permit No. 11P038

ZONE	LETTER	DESCRIPTION	DRAWN	DATE	APPRVD
REVISIONS					

DRAWN N.NIZAMOVA	9/21/11	
DESIGNED N.NIZAMOVA	9/21/11	
CHECKED J.McCUSKER	9-21-11	
PROJMGR F.JONES	9.22.11	
REQUESTER D.TRAN	9/22/11	
R&QA	DATE	
SAFETY	DATE	
SUPERVISOR S.FRANKEL	OCT 21 2011	
	DATE	

REGISTERED PROFESSIONAL ENGINEER
JAMES T. McCUSKER
No. E013699
ELECTRICAL
STATE OF CALIFORNIA

Ames Research Center
Moffett Field, California

RESTORATION OF ELECTRICAL DISTRIBUTION SYSTEM-HIGH VOLTAGE WP1
N213 EAST INDOOR SUBSTATION
ELECTRICAL

ONE LINE DIAGRAM DEMOLITION

SIZE	CAGE CODE	DWG NO.	REV
D	25307	A1---1001-E11	
SCALE		INDEX SHEET 1 OF 1	

FILE NAME: A1---1001-E011_1_R7.DWG 9-21-11

60176753.0001

DWG: \\N213FS2\Proj\VEDS\60176753 (K10018)_REDS - High Voltage\300 CAD\VEDS_HV-WP1\N213-Substation\E\Sheet\A1---1001-E011_1_RHV.dwg Version: 17.1s (LMS Tech) User: polden
DATE: Sep 20, 2011 - 5:22:51 pm

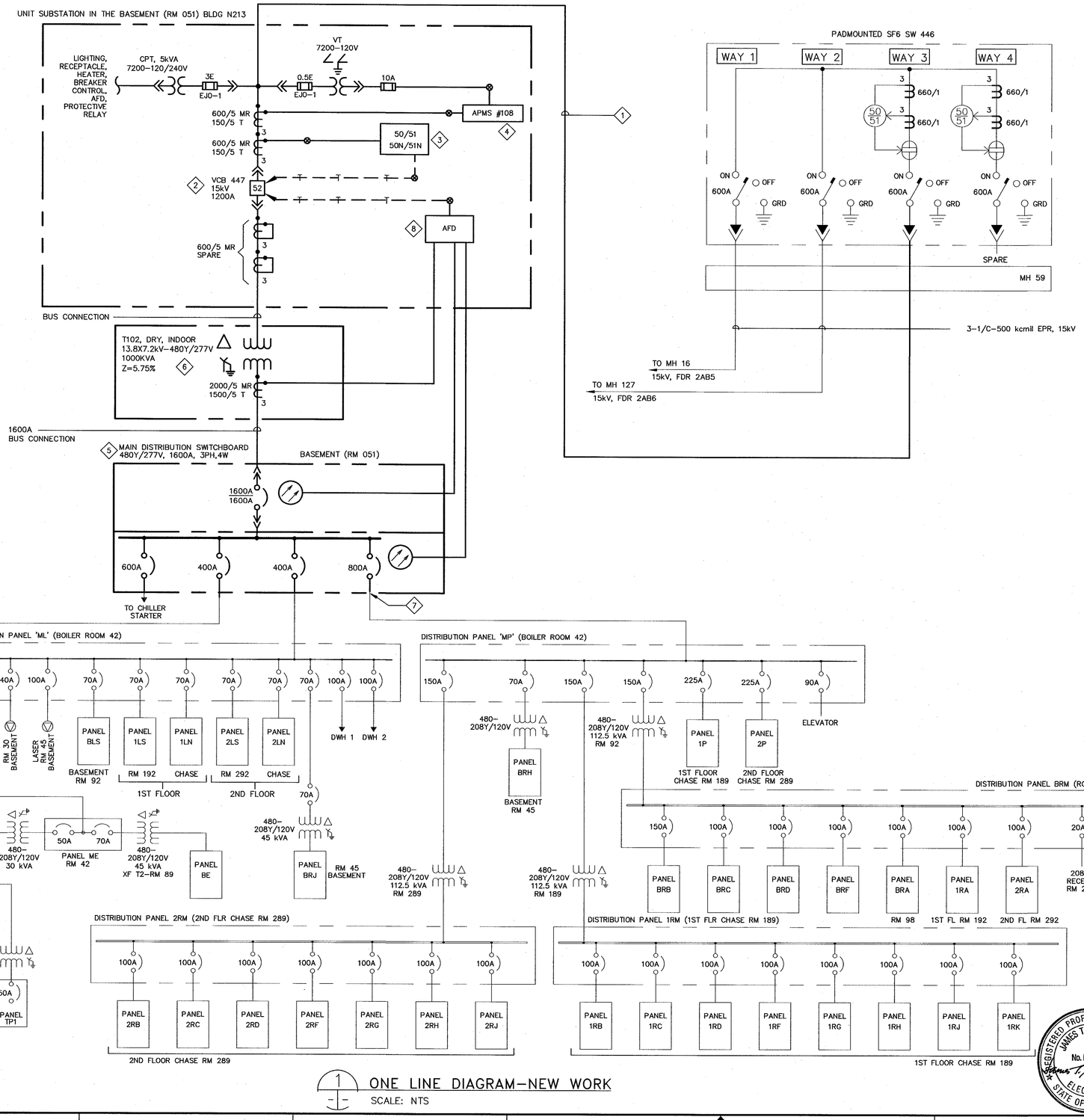

1 ONE LINE DIAGRAM–NEW WORK
SCALE: NTS

SHEET NOTES

1. FOR GENERAL NOTES, SYMBOLS AND ABBREVIATIONS, SEE DRAWING G4.
2. SINGLE LINE DIAGRAM IS BASED ON THE LATEST KNOWN EXISTING NASA DRAWING.
3. LIGHT LINES DENOTE EXISTING MATERIAL/ EQUIPMENT TO REMAIN.
4. ALL INDOOR EQUIPMENT TO BE RATED FOR USE IN NEMA 12 ENVIRONMENT, MINIMUM.
5. NOT ALL CONDUITS AND CONDUCTORS ARE SHOWN ON DWG.
6. DARK OR HEAVY LINES INDICATE NEW MATERIAL/EQUIPMENT TO BE PROVIDED. U.O.N.
7. THE DIAGRAM IS PROVIDED FOR GUIDANCE ONLY. THE CONTRACTOR SHALL FIELD VERIFY ALL EXISTING EQUIPMENT INCLUDING TERMINAL BLOCKS, TERMINAL IDENTIFICATION NUMBER, CONNECTIONS ETC. AND REVISE DRAWING AS NEEDED TO MATCH EXISTING AND NEW EQUIPMENT TO PROVIDE A COMPLETE FUNCTIONAL SYSTEM.
8. ALL CT WIRES SHALL BE #10 AWG MINIMUM, TYPE SIS. ALL VOLTAGE, CPT SECONDARY AND BREAKER TRIP WIRES SHALL BE #12 AWG MINIMUM, TYPE SIS. U.O.N.
9. CONTRACTOR SHALL FIELD VERIFY ALL EQUIPMENT RATING PRIOR TO ORDERING.
10. CPT AND VT'S SHALL BE DRAWOUT TYPE.
11. SEE DRAWING E18 FOR THREE LINE DIAGRAM AND E19 FOR BREAKER CONTROL DIAGRAM.
12. SEE DRAWING E63 FOR NAMEPLATE SCHEDULE.

KEY NOTES

1. PROVIDE NEW 15kV, 3–1/C 350KCMIL, 133%%% INSULATION, EPR CABLE AND 1/C #4/0 GND FROM SW446 TO VCB447 VIA MH E59 IN (E) CONDUIT.
2. PROVIDE NEW 15kV, 1200A SWITCHGEAR WITH VACUUM CIRCUIT BREAKER VCB447, CPT, VT AND ALL ACCESSORIES PER SPECIFICATION SECTION 26 13 00.00 20.
3. INSTALL GFE ALSTOM RELAY COMPLETELY WIRED INTO THE NEW SWITCHGEAR. INSTALLATION SHALL BE IN ACCORDANCE WITH DRAWINGS E64 & E68.
4. INSTALL GFE 3–PHASE DIGITAL POWER METER COMPLETELY WIRED INTO THE NEW SWITCHGEAR. INSTALLATION SHALL BE IN ACCORDANCE WITH DRAWING E64 & E68.
5. PROVIDE NEW INDOOR 480Y/277V SWITCHBOARD WITH 1600A DRAW OUT MAIN CIRCUIT BREAKER WITH GFP AND MOLDED CASE FEEDER CIRCUIT BREAKERS.
6. PROVIDE NEW INDOOR DRY TYPE TRANSFORMER T102, ELECTROSTATIC SHIELDED, TOTALLY ENCLOSED, INCLUDING ALL ACCESSORIES PER SPECIFICATION SECTIONS 26 11 16 & 26 12 00.00 40.
7. RECONNECT (E) FEEDER CABLES TO THE NEW SWITCHBOARD.
8. INSTALL ARC FLASH DETECTOR COMPLETELY WIRED INTO THE NEW SWITCHGEAR. INSTALLATION SHALL BE IN ACCORDANCE WITH MANUFACTURER'S RECOMENDATIONS.

Approved for Construction
Moffett Field Permit Board
Chief Building Official
Permit No. 11P038

ZONE	LETTER	DESCRIPTION	DRAWN	DATE	APPRVD
REVISIONS					

DRAWN N.NIZAMOVA	DATE 9/21/11	Ames Research Center Moffett Field, California
DESIGNED N.NIZAMOVA	DATE 9/21/11	
CHECKED J.McCUSKER	DATE 9-21-11	RESTORATION OF ELECTRICAL DISTRIBUTION SYSTEM–HIGH VOLTAGE WP1 N213 EAST INDOOR SUBSTATION ELECTRICAL
PROJMGR F.JONES	DATE 9.23.11	
REQUESTER D.TRAN	DATE 9/20/11	ONE LINE DIAGRAM NEW WORK
R&QA	DATE	
SAFETY	DATE	
SUPERVISOR S.FRANKEL	DATE OCT 21 2011	SIZE D · CAGE CODE 25307 · REV A · 1---1001-E12
	DATE	SCALE · INDEX · SHEET 1 OF 1

FILE NAME: A1---1001-E012_1_R7.DWG 9-21-11

REGISTERED PROFESSIONAL ENGINEER JAMES T. McCUSKER No. E013699 ELECTRICAL STATE OF CALIFORNIA

60176753.0001

DWG: \\M213FS2\Proj\REDS\60176753 (X10016)_REDS - High Voltage\500 CAD\REDS_HV-WP1\N213-Substation\E\Sheet\A1---1001-E012_1_RHV.dwg Version: 17.1s (LMS Tech) User: pdden
DATE: Sep 20, 2011 - 3:22:57 pm

DWG NO.	SH.	REV
A1---1001-E13	1	

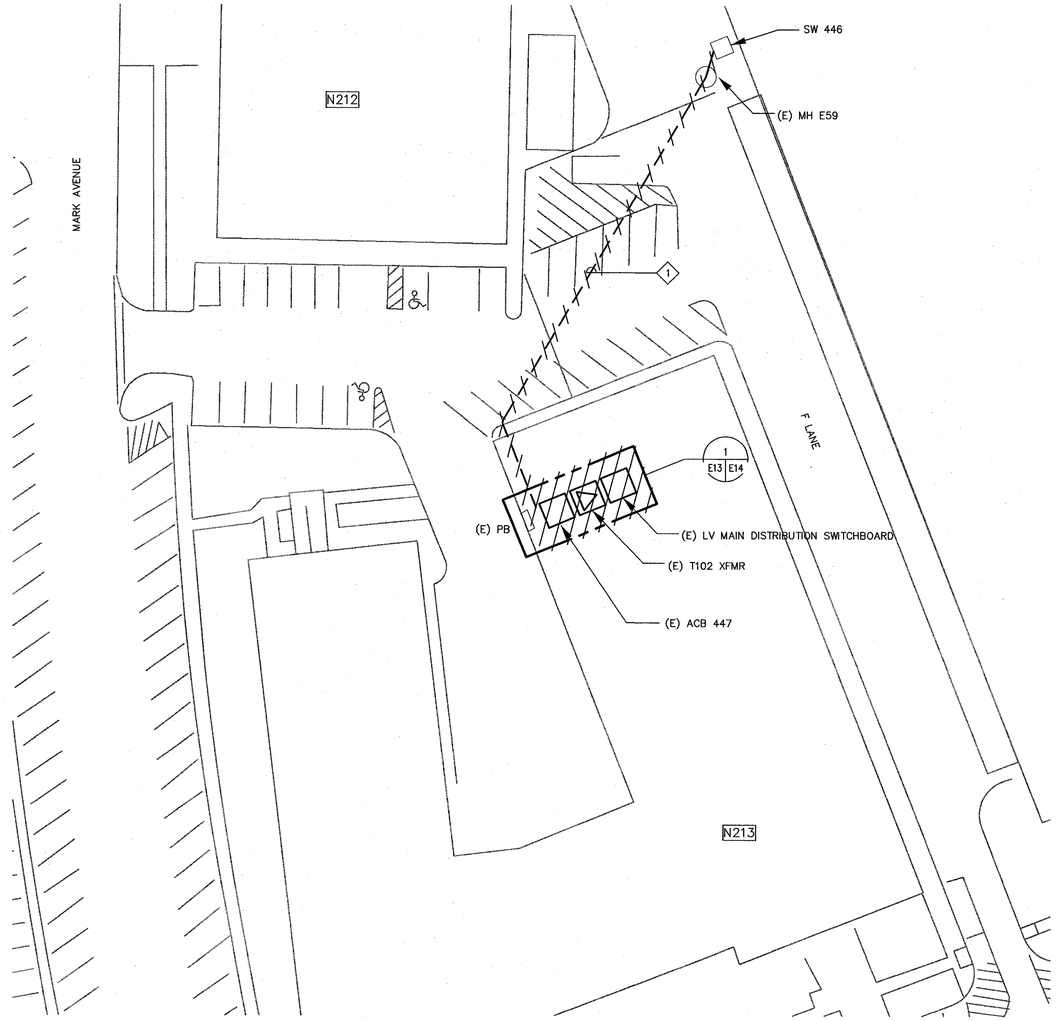

1 SITE PLAN – DEMOLITION
SCALE: 1"=30'

1"=30'-0" 0 15 30 60 90

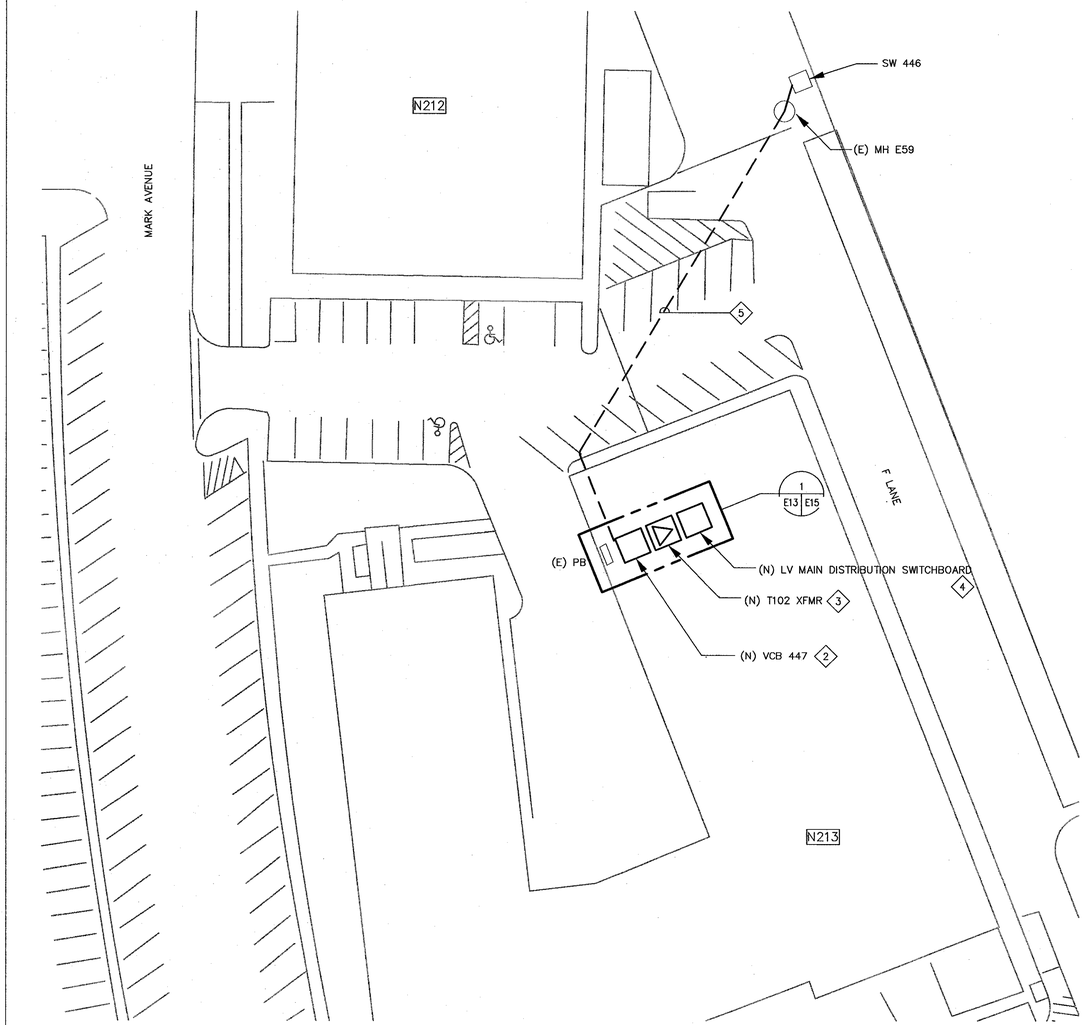

2 SITE PLAN – NEW WORK
SCALE: 1"=30'

1"=30'-0" 0 15 30 60 90

SHEET NOTES

1. FOR GENERAL NOTES, SYMBOLS AND ABBREVIATIONS, SEE DRAWING G4.
2. NOT ALL CONDUITS AND CONDUCTORS ARE SHOWN ON THE DRAWING.
3. HATCHED LINES INDICATE EXISTING MATERIAL/EQUIPMENT TO BE DEMOLISHED AND REMOVED, U.O.N.
4. CONTRACTOR SHALL FIELD VERIFY ALL MEASUREMENTS AT THE SITE AND SHALL BE RESPONSIBLE FOR THEIR ACCURACY PRIOR TO STARTING ANY WORK OR ORDERING ANY MATERIAL.

KEY NOTES

1. DISCONNECT AND REMOVE (E) CABLES FROM ACB447 TO SW 446.
2. PROVIDE NEW 15kV, 1200A SWITCHGEAR WITH VACUUM CIRCUIT BREAKER VCB447, CPT, VT AND ALL ACCESSORIES PER SPECIFICATION SECTION 26 13 00.00 20.
3. PROVIDE NEW INDOOR DRY TYPE TRANSFORMER T102, ELECTROSTATIC SHIELDED, TOTALLY ENCLOSED, INCLUDING ALL ACCESSORIES PER SPECIFICATION SECTIONS 26 11 16 &. 26 12 00.00 40.
4. PROVIDE NEW INDOOR 480Y/277V SWITCHBOARD WITH 1600A DRAW OUT MAIN CIRCUIT BREAKER WITH GFP AND MOLDED CASE FEEDER CIRCUIT BREAKERS.
5. PROVIDE AND INSTALL 3-1/C 350KCMIL, 15KV, EPR AND 1 # 4/0 GND FROM SW 446 TO VCB 447 INTO (E) 4" CONDUITS.

REGISTERED PROFESSIONAL ENGINEER
JAMES T. McCUSKER
No. E013699
ELECTRICAL
STATE OF CALIFORNIA

Approved for Construction
Moffett Field Permit Board
Chief Building Official
Permit No. 11P038

ZONE	LETTER	DESCRIPTION	DRAWN	DATE	APPRVD

REVISIONS

DRAWN N.NIZAMOVA	DATE 9/21/11	
DESIGNED N.NIZAMOVA	DATE 9/21/11	
CHECKED J.McCUSKER	DATE 9-21-11	
PROJMGR F.JONES	DATE 9.23.11	
REQUESTER D.TRAN	DATE 9/22/11	
R&QA	DATE	
SAFETY	DATE	
SUPERVISOR S.FRANKEL	DATE OCT 21 2011	
	DATE	

Ames Research Center
Moffett Field, California

RESTORATION OF ELECTRICAL DISTRIBUTION SYSTEM-HIGH VOLTAGE WP1
N213 EAST INDOOR SUBSTATION
ELECTRICAL

SITE PLANS DEMOLITION & NEW WORK

SIZE	CAGE CODE	REV
D	25307	A
SCALE		INDEX SHEET 1 OF 1

FILE NAME: A1---1001-013_1_R7.DWG 9-21-11

60176753.0001

DWG: \\N213ES2\Proj\NEDS\60176753 (K10018)_NEDS - High Voltage\500 CAD\NEDS_HV-WP1\N213-Substation\E\Sheet\A1---1001-E013_1_R4V.dwg Version: 17.1s (LMS Tech) User: pdden
DATE: Sep 21, 2011 - 1:52:25 pm

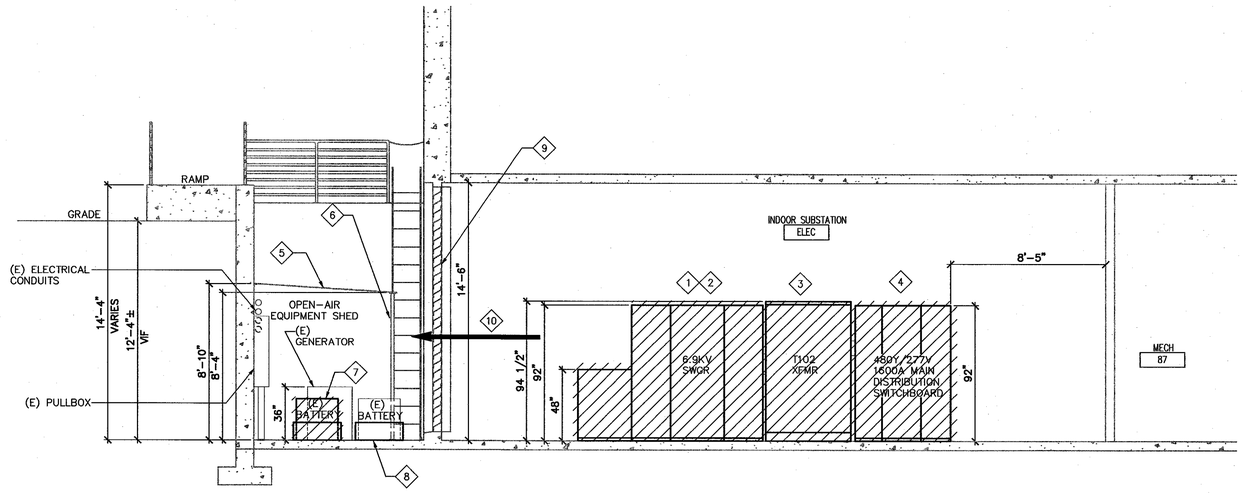

A ELEVATION – DEMOLITION
E14 E14 SCALE: 1/4"=1'-0"

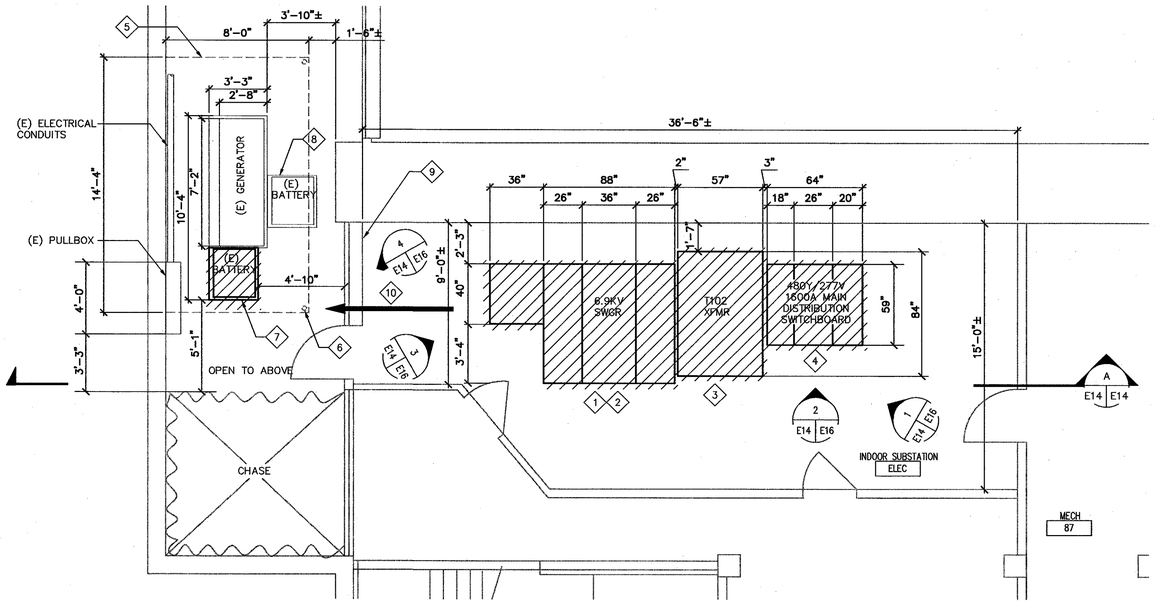

1 EQUIPMENT PLAN – DEMOLITION
E13 E14 SCALE: 1/4"=1'-0"

SHEET NOTES

1. FOR GENERAL NOTES, SYMBOLS AND ABBREVIATIONS, SEE DRAWING G4.
2. HATCHED LINES INDICATE EXISTING MATERIAL/EQUIPMENT TO BE DEMOLISHED AND REMOVED U.O.N.
3. (E) INDOOR ACB447 SWITCHGEAR, LOW VOLTAGE DISTRIBUTION PANEL AND TRANSFORMER T102 SHALL BE REMOVED AND REPLACED WITH NEW. CONTRACTOR SHALL FIELD VERIFY ALL MEASUREMENTS AT THE SITE AND SHALL BE RESPONSIBLE FOR THEIR ACCURACY PRIOR TO STARTING ANY WORK OR ORDERING ANY MATERIAL. PROVIDE NEW VACUUM CIRCUIT BREAKER SWITCHGEAR, TRANSFORMER, AND SWITCHBOARD TO FIT IN THE EXISTING AVAILABLE SPACE.
4. ALL EXISTING CONDUITS AND CONDUCTORS SHALL BE DISCONNECTED FROM (E) EQUIPMENT AND RECONNECTED TO NEW EQUIPMENT, CONTRACTOR SHALL DETERMINE IN FIELD AND PROVIDE PULL BOXES AND RELOCATE/EXTEND OR REPLACE (E) CONDUITS AND CONDUCTORS (MATCH EXISTING SIZE) TO COMPLETE CONNECTIONS TO NEW AND EXISTING EQUIPMENT.
5. EXISTING GROUNDING SYSTEM TO REMAIN FOR RECONNECTION IN NEW WORK.
6. PRIOR TO SHUTDOWN AND DEMOLITION WORK, CONTRACTOR SHALL PERFORM PHASE SEQUENCE TEST ON EXISTING SYSTEM/EQUIPMENT IN THE PRESENCE OF COTR. RECORD PHASE SEQUENCE FOR FUTURE USE IN NEW WORK. SEE DRAWING E15, NOTE 8.

KEY NOTES

1. DISCONNECT AND REMOVE EXISTING INCOMING CABLE FROM SW 446 TO ACB447. SEE DRAWING E12 FOR ONE LINE DIAGRAM.
2. REMOVE EXISTING 7.2KV PRIMARY SWITCHGEAR AND CIRCUIT BREAKER ACB447 AND ALL ASSOCIATED EQUIPMENT AND DEVICES.
3. REMOVE EXISTING TRANSFORMER T102 AND ALL ASSOCIATED EQUIPMENT AND DEVICES. SEE DRAWING E12 FOR ONE LINE DIAGRAM.
4. REMOVE EXISTING 480Y/277V MAIN DISTRIBUTION SWITCHBOARD.
5. REMOVE (E) CORREGATED SHEET METAL ROOF IN ORDER TO FACILITATE REMOVAL OF (E) SUBSTATION EQUIPMENT. PROTECT FOR REINSTALLATION IN NEW WORK.
6. REMOVE (E) METAL POLE IN ORDER TO FACILITATE REMOVAL OF (E) SUBSTATION EQUIPMENT. PROTECT FOR REINSTALLATION IN NEW WORK.
7. REMOVE AND RELOCATE (E) BOX WITH BATTERY IN ORDER TO FACILITATE REMOVAL OF (E) SUBSTATION EQUIPMENT. EXTEND CONDUIT AND WIRING AS NECESSARY TO PROVIDE CONNECTION TO (E) GENERATOR.
8. TEMPORARY LOCATION OF (E) BOX WITH BATTERY.
9. REMOVE AIR INTAKE LOUVER AND METAL DOOR IN ORDER TO FACILITATE REMOVAL OF (E) SUBSTATION EQUIPMENT. PROTECT FOR REINSTALLATION IN NEW WORK.
10. PATH FOR REMOVAL OF DEMOLISHED ELECTRICAL EQUIPMENT FROM SUBSTATION ROOM.

Approved for Construction
Moffett Field Permit Board
Chief Building Official
Permit No. 11P038

ZONE	LETTER	DESCRIPTION	DRAWN	DATE	APPRVD

REVISIONS

DRAWN P.ALDEN	DATE 9.22.11	
DESIGNED N.NIZAMOVA	DATE 9/21/11	
CHECKED J.McCUSKER	DATE 9/21/11	
PROJMGR F.JONES	DATE 9.23.11	
REQUESTER D.TRAN	DATE 9.22.11	
R&QA	DATE	
SAFETY	DATE	
SUPERVISOR S.FRANKEL	DATE OCT 3 2011	

REGISTERED PROFESSIONAL ENGINEER JAMES T. McCUSKER No. EE13699 ELECTRICAL STATE OF CALIFORNIA

1/4"=1' 0 2 4 8 12

NASA

Ames Research Center
Moffett Field, California

RESTORATION OF ELECTRICAL DISTRIBUTION SYSTEM-HIGH VOLTAGE WP1
N213 EAST INDOOR SUBSTATION
ELECTRICAL

EQUIPMENT PLAN & ELEVATION DEMOLITION

SIZE	CAGE CODE	DWG NO.	REV
D	25307	A1---1001-E14	
SCALE		INDEX SHEET 1 OF 1	

FILE NAME: A1----1001-014_1_R7.DWG 9-21-11

60176753.0001

DWG: \\N213FS01\Proj\REDS\60176753 (K10018)_REDS - High Voltage\500 CAD\REDS_HV-WP1\N213-Substation\E\Sheet\A1----1001-E014_1_RHV.dwg Version: 17.1s (LMS Tech) User: polden
DATE: Sep 20, 2011 - 12:20:07 pm

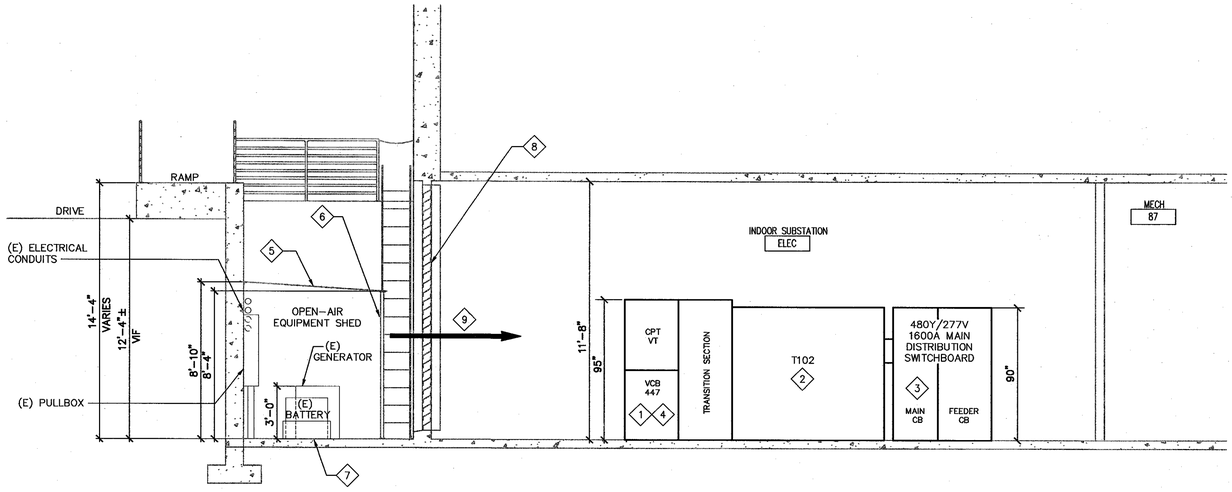

A ELEVATION–NEW WORK
SCALE: 1/4"=1'-0"

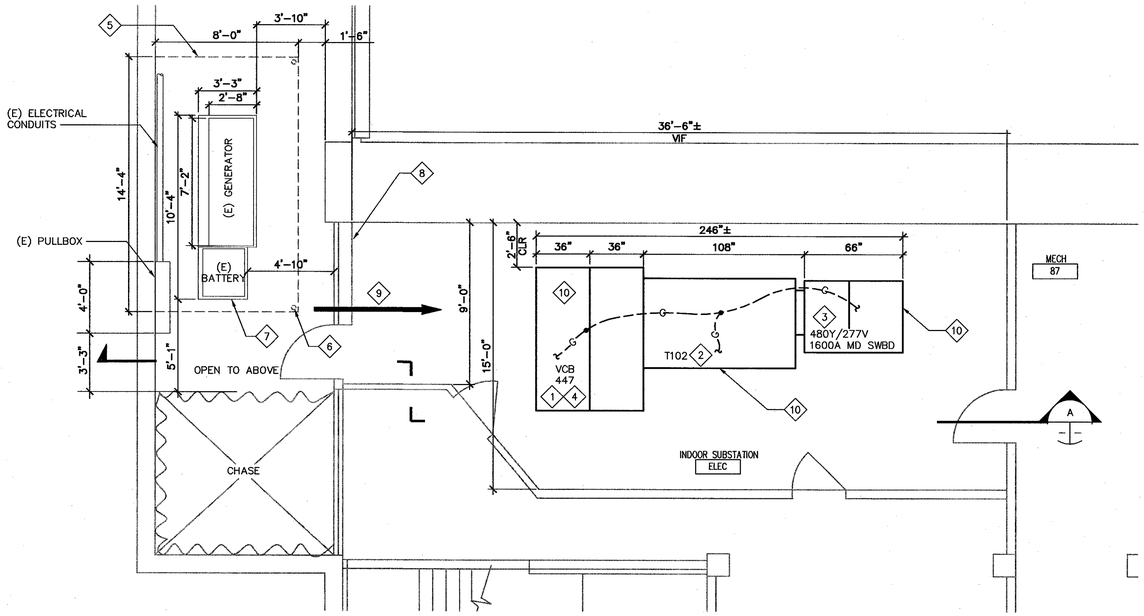

1 EQUIPMENT PLAN – NEW WORK
E13 E15 SCALE: 1/4"=1'-0"

0 2 4 8 12
1/4"=1'

SHEET NOTES

1. FOR GENERAL NOTES, SYMBOLS AND ABBREVIATIONS, SEE DRAWING G4.
2. HEAVY LINES INDICATE NEW MATERIAL/EQUIPMENT TO BE PROVIDED. LIGHT LINES DENOTE EXISTING CONDITIONS, MATERIALS AND EQUIPMENT TO REMAIN.
3. CONTRACTOR SHALL FIELD VERIFY ALL MEASUREMENTS AT THE SITE AND SHALL BE RESPONSIBLE FOR THEIR ACCURACY PRIOR TO STARTING ANY WORK OR ORDERING ANY MATERIAL.
4. ALL OUTDOOR EQUIPMENT SHALL BE NEMA 3R.
5. ALL EXISTING CONDUITS AND CONDUCTORS SHALL BE RECONNECTED TO NEW EQUIPMENT. CONTRACTOR SHALL DETERMINE IN THE FIELD AND PROVIDE PULL BOXES AND RELOCATE, EXTEND OR REPLACE (E) CONDUIT AND CONDUCTORS (MATCH EXISTING SIZE) TO COMPLETE CONNECTIONS TO NEW AND EXISTING EQUIPMENT.
6. DIMENSION SHOWN ARE FOR GUIDANCE ONLY. CONTRACTOR SHALL VERIFY CONDUIT STUB-UP & EQUIPMENT DIMENSIONS BEFORE INSTALLATION.
7. ELECTRICAL EQUIPMENT AND RACEWAYS SHALL BE SUPPORTED AND ANCHORED IN ACCORDANCE WITH CALIFORNIA BUILDING CODE SEISMIC REQUIREMENTS.
8. PRIOR TO ENERGIZATION, CONFIRM THAT PHASE SEQUENCE MATCHES THAT RECORDED IN SHEET NOTE 6, DRAWING E14.

KEY NOTES

1. PROVIDE NEW 15kV, 1200A SWITCHGEAR WITH VACUUM CIRCUIT BREAKER VCB447, CPT, VT AND ALL ACCESSORIES PER SPECIFICATION SECTION 26 13 00.00 20.
2. PROVIDE NEW INDOOR DRY TYPE TRANSFORMER T102, ELECTROSTATIC SHIELDED, TOTALLY ENCLOSED, INCLUDING ALL ACCESSORIES PER SPECIFICATION SECTIONS 26 11 16 & 26 12 00.00 40.
3. PROVIDE 480Y/227V, 1600V MAIN DISTRIBUTION SWITCHBOARD PER SPECIFICATION 26 23 00. PROVIDE TRANSITION SECTION IF REQUIRED. SEE ONE LINE DIAGRAM ON DRAWING E13.
4. PROVIDE AND INSTALL 3-1/C 350KCMIL, 15KV, EPR AND 1 # 4/0 GND FROM SW 446 TO VCB 447 INTO (E) 4" CONDUITS.
5. REINSTALL (E) CORREGATED SHEET METAL ROOF ABOVE (E) GENERATOR IN ITS ORIGINAL LOCATION.
6. REINSTALL (E) METAL POLE IN ITS ORIGINAL LOCATION.
7. REINSTALL (E) BOX WITH BATTERY IN ITS ORIGINAL LOCATION AND RECONNECT TO (E) GENERATOR.
8. REINSTALL (E) AIR INTAKE LOUVER AND METAL DOOR IN ITS ORIGINAL LOCATION.
9. PATH FOR DELIVERY OF NEW SUBSTATION EQUIPMENT INTO THE ROOM.
10. CONNECT NEW EQUIPMENT TO EXISTING GROUNDING SYSTEM WITH # 4/0 AWG BARE COOPER CONDUCTOR.
10. 1/2"ø THREADED ROD W/ HILTI RE-500 SD ADHESIVE ANCHOR, MIN. 4" EMBEDMENT (TOTAL OF 4 PER EQUIPMENT/CABINET).

Approved for Construction
Moffett Field Permit Board
Chief Building Official
Permit No. 11P038

ZONE	LETTER	DESCRIPTION	DRAWN	DATE	APPRVD

REVISIONS

DRAWN P.ALDEN	DATE 9.22.11	
DESIGNED N.NIZAMOVA	DATE 9/22/11	
CHECKED J.McCUSKER	DATE 9/21/11	
PROJMGR F.JONES	DATE 9.22.11	
REQUESTER D.TRAN	DATE 9/26/11	
R&QA	DATE	
SAFETY	DATE	
SUPERVISOR S.FRANKEL	DATE OCT 21 2011	

REGISTERED PROFESSIONAL ENGINEER
JAMES T. McCUSKER
No. E013699
ELECTRICAL
STATE OF CALIFORNIA

Ames Research Center
Moffett Field, California

RESTORATION OF ELECTRICAL DISTRIBUTION SYSTEM-HIGH VOLTAGE WP1
N213 EAST INDOOR SUBSTATION
ELECTRICAL

EQUIPMENT PLAN & ELEVATION NEW WORK

SIZE	CAGE CODE	REV
D	25307	A 1---1001-E15
SCALE	INDEX	SHEET 1 OF 1

FILE NAME: A1---1001-015_1_R7.DWG 9-21-11

60176753.0001

DWG: \\NZ13FS2\Proj\REDS\60176753 (X10018)_REDS - High Voltage\500 CAD\REDS_HV-WP1\NZ13-Substation\E\Sheet\A1---1001-E015_1_RHV.dwg Version: 17.1s (LMS Tech) User: pdolen
DATE: Sep 20, 2011 - 5:23:10 pm

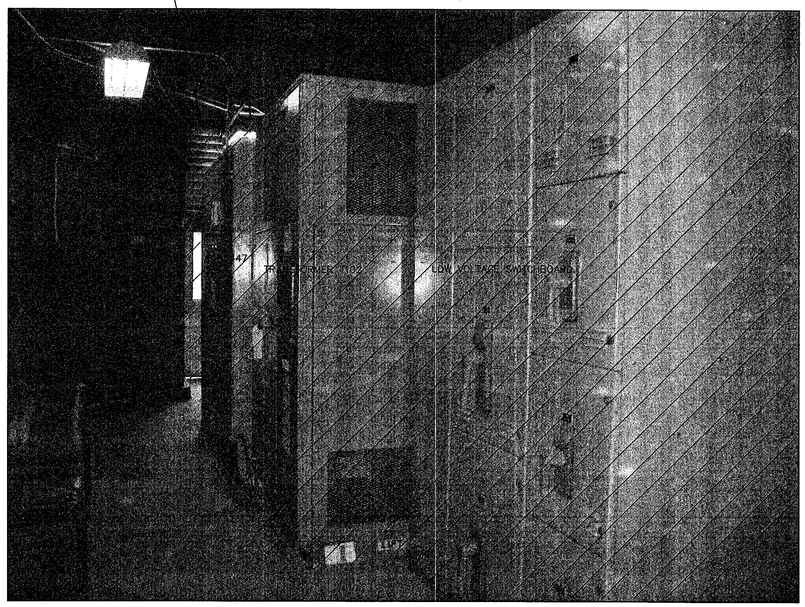

1 SUBSTATION ELEVATION VIEW 1
E14 E16 SCALE: NTS

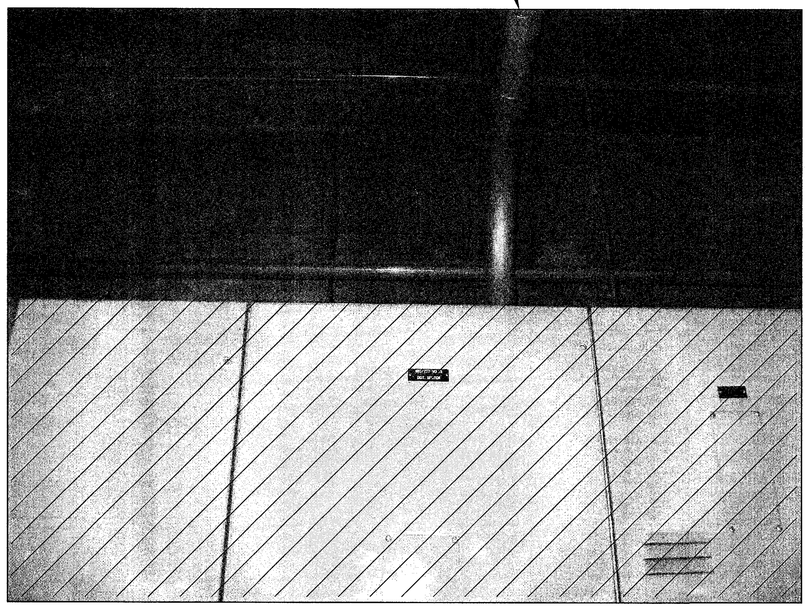

2 SPACE ABOVE LOW VOLTAGE SWITCHBOARD 2
E14 E16 SCALE: NTS

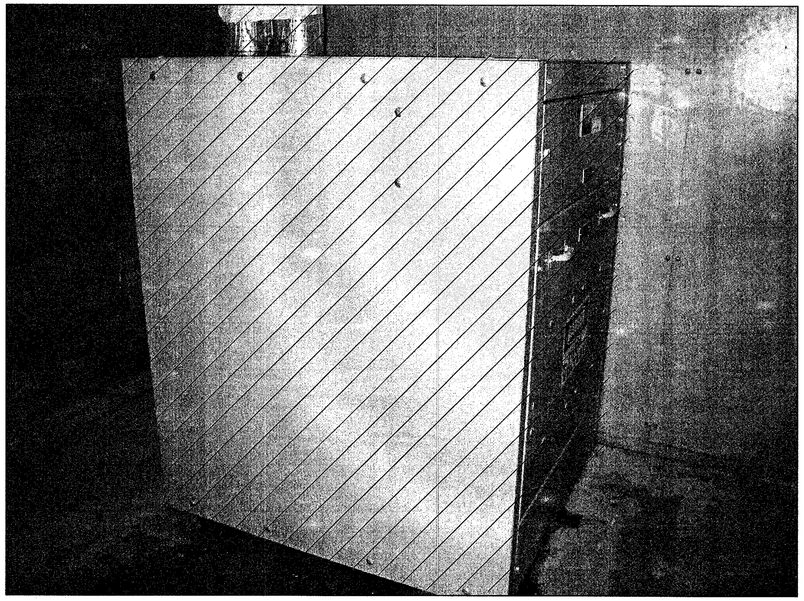

3 CONTROL TRANSFORMERS CABINET ELEVATION VIEW 3
E14 E16 SCALE: NTS

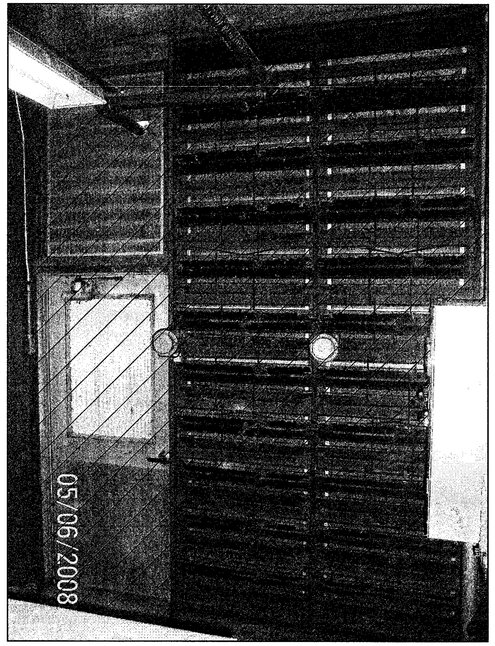

4 AIR INTAKE LOUVER AND METAL DOOR ELEVATION 5
E14 E16 SCALE: NTS

SHEET NOTES

1. FOR GENERAL NOTES, SYMBOLS AND ABBREVIATIONS, SEE DRAWING G4.
2. HATCHED LINES INDICATE EXISTING MATERIALS AND EQUIPMENT TO BE DEMOLISHED AND REMOVED.
3. SEE DRAWING E14 FOR EQUIPMENT LAYOUT–EXISTING/DEMOLITION.

KEY NOTES

1. DISCONNECT AND REMOVE THE EXISTING SUBSTATION AS HATCHED.
2. DISCONNECT AND REMOVE EXISTING LOW VOLTAGE SWITCHBOARD.
3. DISCONNECT AND REMOVE EXISTING CONTROL TRANSFORMERS CABINET.
4. MODIFY AS NECESSARY AND RECONNECT THE EXISTING 5"C TO THE NEW LOW VOLTAGE SWITCHBOARD.
5. REMOVE AIR INTAKE LOUVER AND METAL DOOR IN ORDER TO FACILITATE REMOVAL OF (E) SUBSTATION EQUIPMENT AND DELIVERY OF NEW SUBSTATION EQUIPMENT INSIDE THE ROOM. PROTECT FOR REINSTALLATION IN NEW WORK.

Approved for Construction
Moffett Field Permit Board

Chief Building Official
Permit No. 11P038

ZONE	LETTER	DESCRIPTION	DRAWN	DATE	APPRVD

REVISIONS

REGISTERED PROFESSIONAL ENGINEER JAMES T. McCUSKER No. E013699 ELECTRICAL STATE OF CALIFORNIA

DRAWN N.NIZAMOVA		DATE 9/21/11
DESIGNED N.NIZAMOVA		DATE 9/21/11
CHECKED J.McCUSKER		DATE 9-21-11
PROJMGR F.JONES		DATE 9.23.11
REQUESTER D.TRAN		DATE 9/26/11
R&QA		DATE
SAFETY		DATE
SUPERVISOR S.FRANKEL		DATE OCT 21 2011

Ames Research Center
Moffett Field, California

RESTORATION OF ELECTRICAL DISTRIBUTION SYSTEM–HIGH VOLTAGE WP1
N213 EAST INDOOR SUBSTATION
ELECTRICAL

PHOTOGRAPHIC DETAILS
DEMOLITION

SIZE	CAGE CODE	REV
D	25307	A 1---1001-E16
SCALE	INDEX	SHEET 1 OF 1

FILE NAME: A1---1001-E016_1_R7.DWG 9-21-11

60176753.0001

DWG: \\N213FS2\Proj\REDS\60176753 (K10018)_REDS - High Voltage\500 CAD\REDS_HV-WP1\N213-Substation\E\Sheet\A1---1001-E016_1_RHV.dwg Version: 17.1s (LMS Tech) User: polden
DATE: Sep 20, 2011 - 5:23:18 pm

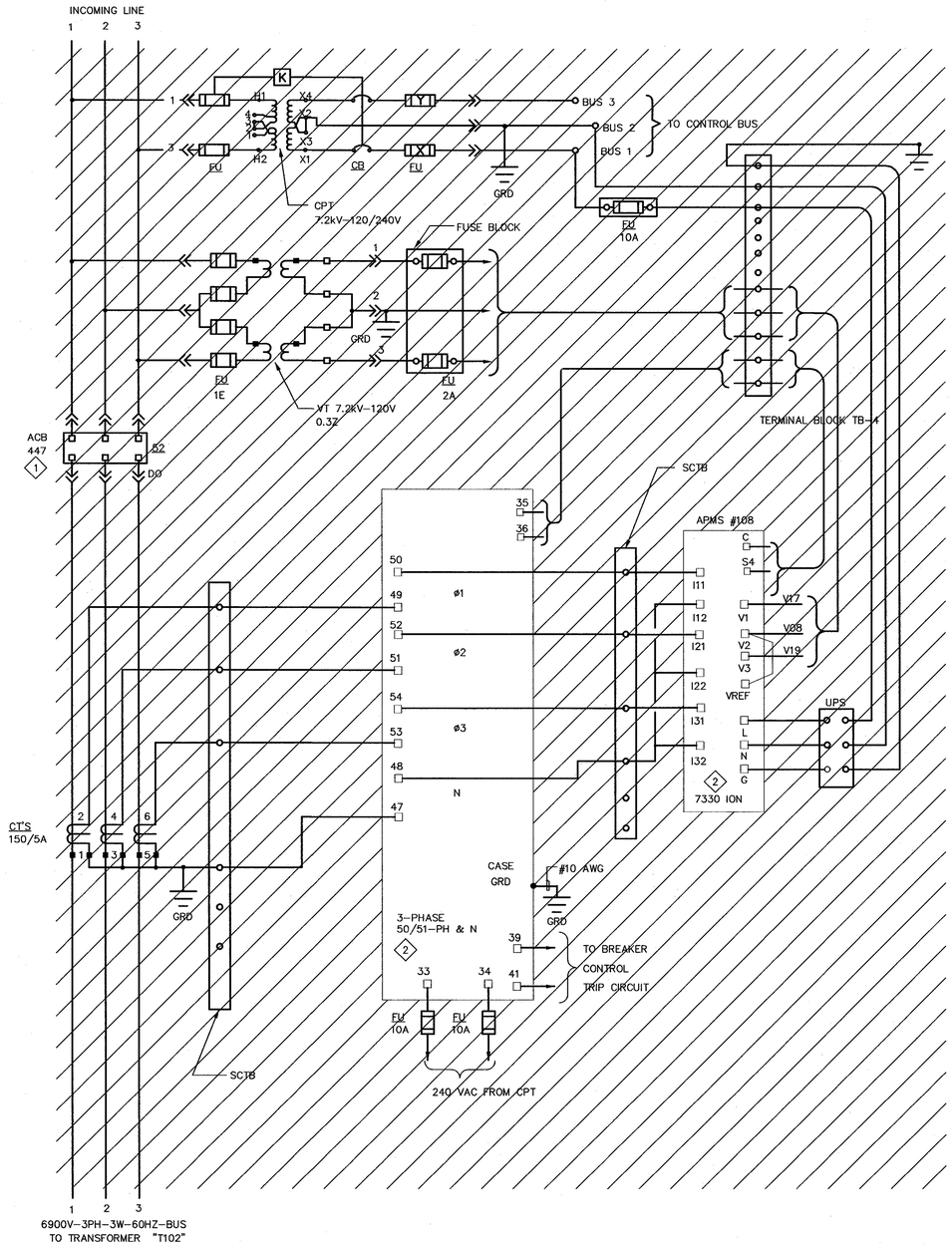

1 THREE LINE DIAGRAM-DEMOLITION
SCALE: N.T.S.

DWG NO.	SH.	REV
A1---1001-E17	1	

SHEET NOTES

1. FOR GENERAL NOTES, SYMBOLS AND ABBREVIATIONS, SEE DRAWING G4.
2. HATCHED LINES INDICATE EXISTING MATERIAL/EQUIPMENT TO BE DEMOLISHED AND REMOVED. U.O.N.
3. THE DIAGRAM IS PROVIDED FOR GUIDANCE ONLY. THE CONTRACTOR SHALL FIELD VERIFY ALL EXISTING EQUIPMENT INCLUDING TERMINAL BLOCKS, TERMINAL IDENTIFICATION NUMBER, CONNECTIONS ETC. AND REVISE DRAWINGS AS NEEDED TO MATCH EXISTING AND NEW EQUIPMENT TO PROVIDE A COMPLETE FUNCTIONAL SYSTEM.
4. THE CONTROL DIAGRAM IS BASED ON THE LATEST KMOWN EXISTING DRAWINGS.

KEY NOTES

1. DISCONNECT AND REMOVE EXISTING ACB SWITCHGEAR AND ALL ASSOCIATED DEVICES AND ACCESSORIES.
2. REMOVE, PROTECT FROM DAMAGE AND TURN OVER TO THE GOVERNMENT.

Approved for Construction
Moffett Field Permit Board

Chief Building Official
Permit No. 11P038

ZONE	LETTER	DESCRIPTION	DRAWN	DATE	APPRVD

REVISIONS

DRAWN N.NIZAMOVA		DATE 9/21/11
DESIGNED N.NIZAMOVA		DATE 9/21/11
CHECKED J.McCUSKER		DATE 9-21-11
PROJMGR F.JONES		DATE 9.23.11
REQUESTER D.TRAN		DATE 9/22/11
R&QA		DATE
SAFETY		DATE
SUPERVISOR S.FRANKEL		DATE OCT 21 2011

REGISTERED PROFESSIONAL ENGINEER
JAMES T. McCUSKER
No. E013699
ELECTRICAL
STATE OF CALIFORNIA

Ames Research Center
Moffett Field, California

RESTORATION OF ELECTRICAL DISTRIBUTION SYSTEM-HIGH VOLTAGE WP1
N213 EAST INDOOR SUBSTATION
ELECTRICAL

THREE LINE DIAGRAM
DEMOLITION

SIZE	CAGE CODE	REV
D	25307	A 1---1001-E17
SCALE	INDEX	SHEET 1 OF 1

FILE NAME: A1---1001-E017_1_R7.DWG 9-21-11

60176753.0001

DWG: \\N213FS2\Proj\REDS\60176753 (K10018)_REDS - High Voltage\500 CAD\REDS_HV-WP1\N213-Substation\E\Sheet\A1---1001-E017_1_RHV.dwg Version: 17.1s (LMS Tech) User: palden
DATE: Sep 20, 2011 - 5:23:23 pm

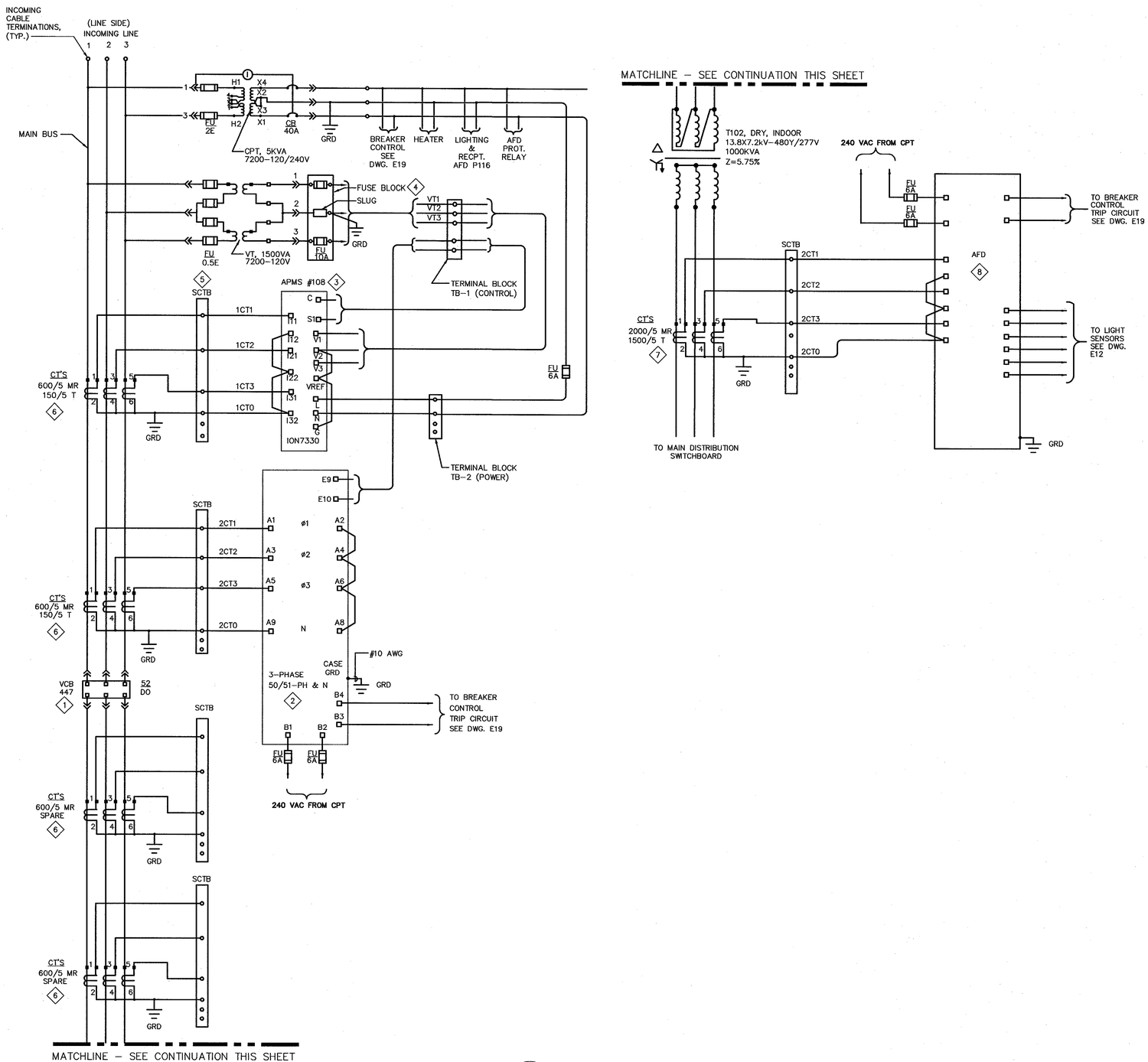

1 THREE LINE DIAGRAM–NEW WORK
SCALE: N.T.S.

SHEET NOTES

1. FOR GENERAL NOTES, SYMBOLS AND ABBREVIATIONS, SEE DRAWING G4.
2. DARK OR HEAVY LINES INDICATE NEW MATERIAL/EQUIPMENT TO BE PROVIDED. U.O.N.
3. THE DIAGRAM IS PROVIDED FOR GUIDANCE ONLY. THE CONTRACTOR SHALL FIELD VERIFY ALL EXISTING EQUIPMENT INCLUDING TERMINAL BLOCKS, TERMINAL IDENTIFICATION NUMBER, CONNECTIONS ETC. AND REVISE DRAWINGS AS NEEDED TO MATCH EXISTING AND NEW EQUIPMENT TO PROVIDE A COMPLETE FUNCTIONAL SYSTEM.
4. ALL CT WIRES SHALL BE #10 AWG MINIMUM, TYPE SIS. ALL VOLTAGE, CPT SECONDARY AND BREAKER TRIP WIRES SHALL BE #12 AWG MINIMUM, TYPE SIS. U.O.N.

KEY NOTES

1. PROVIDE NEW 15KV, 1200A SWITCHGEAR WITH 15KV VACUUM CIRCUIT BREAKER AND ACCESSORIES PER SPECIFICATION.
2. INSTALL GFE ALSTOM RELAY COMPLETELY WIRED INTO THE NEW EQUIPMENT.
3. INSTALL GFE DIGITAL POWER METER COMPLETELY WIRED INTO THE NEW EQUIPMENT.
4. PROVIDE FUSE BLOCK, FLEXCORE KLK–3 OR APPROVED EQUAL.
5. PROVIDE (4) CIRCUIT SHORTING TERMINAL BLOCK (SCTB), FLEXCORE 1KU6SC OR APPROVED EQUAL.
6. PROVIDE (2) SETS OF 3 WINDOW–TYPE MULTI–RATIO CT'S ON THE LINE SIDE OF THE BREAKER. PROVIDE (2) ADDITIONAL SPARE SETS OF CT'S ON THE LOAD SIDE OF THE BREAKER. ALL CT'S SHALL BE C200 ACCURACY.
7. PROVIDE (1) SET OF 3 WINDOW–TYPE MULTI–RATIO CT'S ON THE LOAD SIDE OF THE TRANSFORMER. CT'S SHALL BE C400 ACCURACY.
8. INSTALL ARC FLASH DETECTOR COMPLETELY WIRED INTO THE NEW SWITCHGEAR. INSTALLATION SHALL BE IN ACCORDANCE WITH MANUFACTURER'S RECOMENDATIONS.

Approved for Construction
Moffett Field Permit Board
Chief Building Official
Permit No. 11P038

ZONE	LETTER	DESCRIPTION	DRAWN	DATE	APPRVD
REVISIONS					

DRAWN N.NIZAMOVA	DATE 9/21/11	Ames Research Center, Moffett Field, California
DESIGNED N.NIZAMOVA	DATE 9/21/11	RESTORATION OF ELECTRICAL DISTRIBUTION SYSTEM–HIGH VOLTAGE WP1
CHECKED J.McCUSKER	DATE 9-21-11	N213 EAST INDOOR SUBSTATION
PROJMGR F.JONES	DATE 9.21.11	ELECTRICAL
REQUESTER D.TRAN	DATE 9/21/11	THREE LINE DIAGRAM NEW WORK
R&QA	DATE	
SAFETY	DATE	
SUPERVISOR S.FRANKEL	DATE OCT 21 2011	

REGISTERED PROFESSIONAL ENGINEER JAMES T. McCUSKER No. E013699 ELECTRICAL STATE OF CALIFORNIA

SIZE	CAGE CODE	DWG NO.	REV
D	25307	A1---1001-E18	
SCALE		INDEX SHEET 1 OF 1	

FILE NAME: A1---1001-E018_1_R7.DWG 9-21-11

60176753.0001

DWG: \\M213FS2\Proj\KEDS\60176753 (K10018)_KEDS - High Voltage\500 CAD\KEDS_HV-WP1\M213-Substation\E\Sheet\A1---1001-E018_1_R#V.dwg Version: 17.1s (LMS Tech) User: pdden
DATE: Sep 20, 2011 - 5:23:28 pm

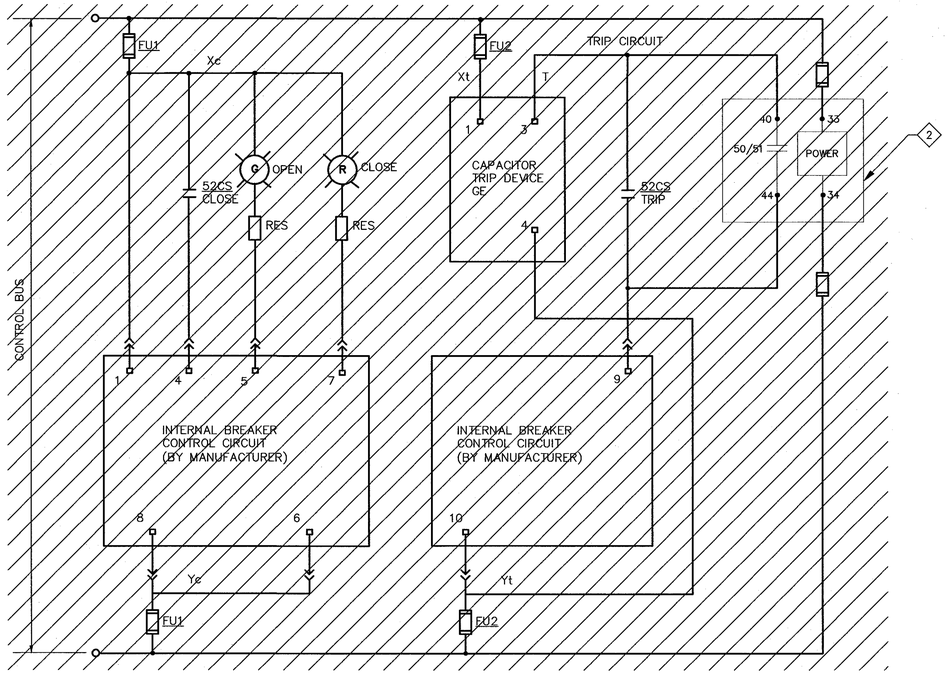

1 ACB447 BREAKER CONTROL DIAGRAM – DEMOLITION ◇1

SCALE: NTS

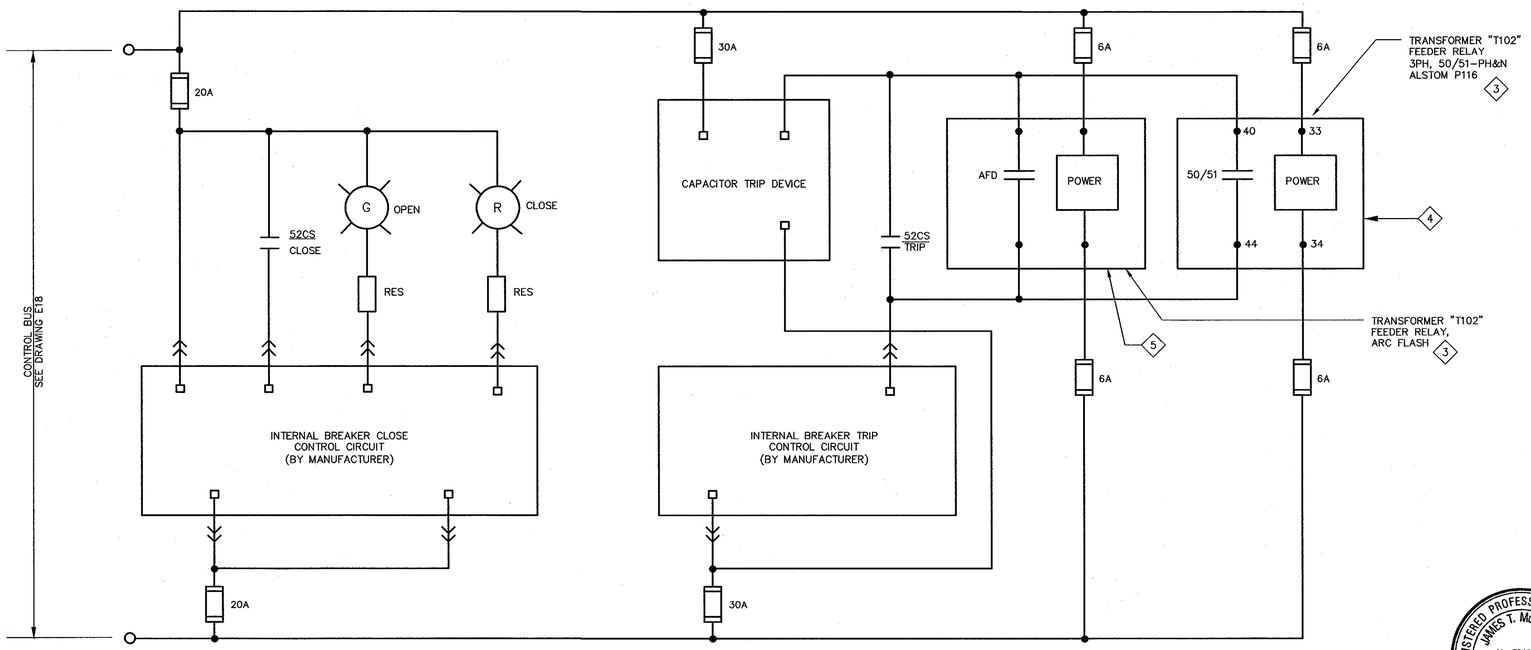

2 VCB447 BREAKER CONTROL DIAGRAM – NEW WORK

SCALE: NTS

SHEET NOTES

1. FOR GENERAL NOTES, SYMBOLS AND ABBREVIATIONS, SEE DRAWING G4.
2. HATCHED LINES INDICATE EXISTING MATERIAL/EQUIPMENT TO BE DEMOLISHED AND REMOVED. U.O.N.
3. DARK OR HEAVY LINES INDICATE NEW MATERIAL/EQUIPMENT TO BE PROVIDED. U.O.N.
4. THE DIAGRAMS ARE PROVIDED FOR GUIDANCE ONLY. THE CONTRACTOR SHALL FIELD VERIFY ALL EXISTING EQUIPMENT INCLUDING TERMINAL BLOCKS, TERMINAL IDENTIFICATION NUMBER, CONNECTIONS ETC. AND REVISE DRAWINGS AS NEEDED TO MATCH EXISTING AND NEW EQUIPMENT TO PROVIDE A COMPLETE FUNCTIONAL SYSTEM.
5. THE CONTROL DIAGRAM IS BASED ON THE LATEST KMOWN EXISTING DRAWINGS.

KEY NOTES

◇1 DISCONNECT AND REMOVE EXISTING VCB447 SWITCHGEAR INCLUDING ALL ASSOCIATED DEVICES AND ACESSORIES.

◇2 REMOVE ALSTOM RELAY FROM (E) SWITCHGEAR AND TURN OVER TO THE GOVERNMENT.

◇3 TYPICAL BREAKER CONTROL DIAGRAM WITH THE RELATED TRANSFORMER FEEDER RELAY. FOR SUBSTATION ONE LINE DIAGRAM AND THREE LINE DIAGRAM, REFER TO THE DRAWINGS E12 AND E18 RESPECTIVELY.

◇4 INSTALL NEW GFE 3-PHASE MICROPROCESSOR BASED RELAY, ALSTOM MICOM P116, COMPLETELY WIRED INTO THE EQUIPMENT.

◇5 INSTALL NEW ARC FLASH DETECTOR COMPLETELY WIRED INTO THE EQUIPMENT.

Approved for Construction
Moffett Field Permit Board

Chief Building Official
Permit No. 11P038

ZONE	LETTER	DESCRIPTION	DRAWN	DATE	APPRVD
		REVISIONS			

DRAWN N.NIZAMOVA	DATE 9/21/11	Ames Research Center, Moffett Field, California
DESIGNED N.NIZAMOVA	DATE 9/21/11	RESTORATION OF ELECTRICAL DISTRIBUTION SYSTEM–HIGH VOLTAGE WP1
CHECKED J.McCUSKER	DATE 9-21-11	N213 EAST INDOOR SUBSTATION
PROJMGR F.JONES	DATE 9.23.11	ELECTRICAL
REQUESTER D.TRAN	DATE 9/26/11	VCB447
R&QA	DATE	BREAKER CONTROL DIAGRAMS
SAFETY	DATE	DEMOLITION & NEW WORK
SUPERVISOR S.FRANKEL	DATE OCT 21 2011	SIZE D · CAGE CODE 25307 · A 1---1001-E19 REV
	DATE	SCALE · INDEX · SHEET 1 OF 1

REGISTERED PROFESSIONAL ENGINEER JAMES T. McCUSKER No. E013699 ELECTRICAL STATE OF CALIFORNIA

FILE NAME: A1---1001-E019_1_R7.DWG 9-21-11

60176753.0001

DWG: \\N213FS2\Proj\REDS\60176753 (K10018)_REDS - High Voltage\300 CAD\REDS_HV-WP1\N213-Substation\E\Sheet\A1---1001-E019_1_RHV.dwg Version: 17.1s (LMS Tech)
DATE: Sep 20, 2011 - 5:23:33 pm
User: pdean

DWG NO. A1---1001-E20 | SH. 1 | REV

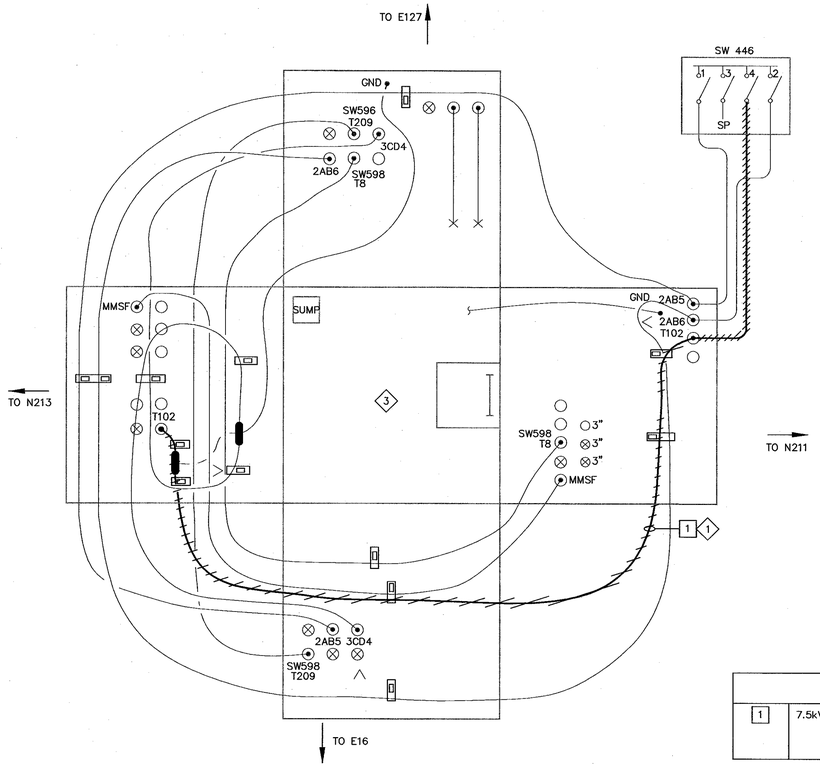

CABLE DESCRIPTION	
1	7.5kV, 3-1/C-350kCMIL CABLE

1 MANHOLE NO. E59 DETAIL – DEMOLITION (WEST OF N211)
SCALE: NTS

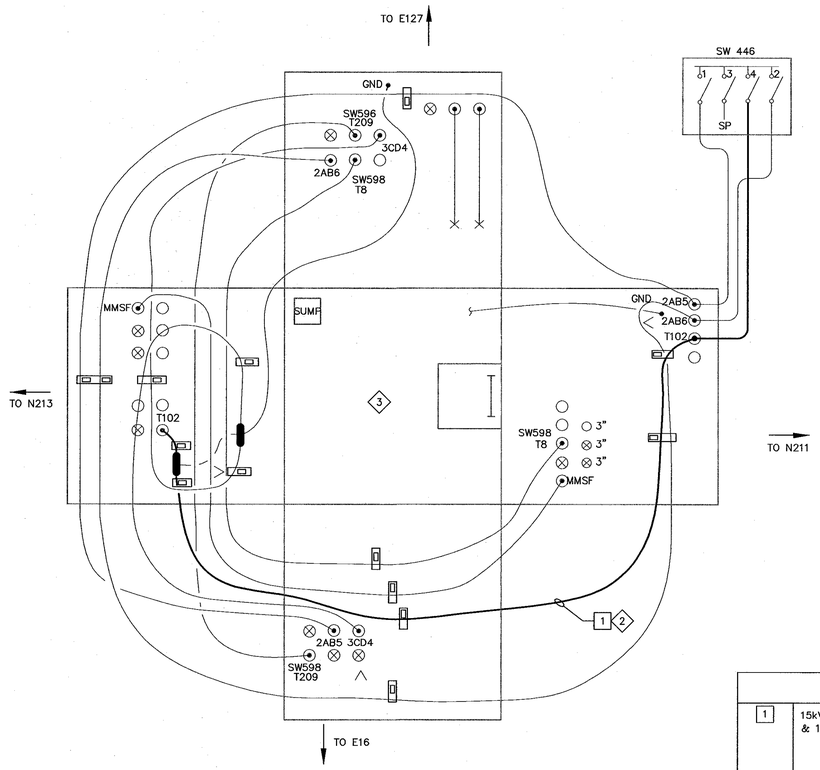

CABLE DESCRIPTION	
1	15kV, 3-1/C-350 kCMIL, 133%INS., EPR CABLE & 1/C # 4/0 GND

2 MANHOLE NO. E59 DETAIL – NEW WORK (WEST OF N211)
SCALE: NTS

SHEET NOTES

1. FOR GENERAL NOTES, SYMBOLS AND ABBREVIATIONS, SEE DRAWING G4.
2. SHEET NOTES #1,2,3 ARE NOT PART OF THIS CONTRACT (THE INTENTION IS FOR NASA 'IN-HOUSE' USE)
3. THIS DRAWING IS NOT THE CONTROLLED NASA AMES CONFIGURATION MANAGEMENT BASELINE DRAWING.
4. THE AMES CONFIGURATION MANAGEMENT BASELINE DRAWING THAT WAS USED TO CREATE THE PROJECT DRAWING IS A1---9801-E59.
5. NOT ALL CONDUITS AND CONDUCTORS ARE SHOWN ON DRAWING.
6. HATCHED LINES INDICATE EXISTING MATERIAL/EQUIPMENT TO BE DEMOLISHED AND REMOVED, U.O.N.
7. CONTRACTOR SHALL FIELD VERIFY ALL MEASUREMENTS AT THE SITE AND SHALL BE RESPONSIBLE FOR THEIR ACCURACY PRIOR TO STARTING ANY WORK OR ORDERING ANY MATERIAL.
8. UPON COMPLETION OF CABLE WORK AND PRIOR ENERGIZATIOIN, CONTRACTOR SHALL INFORM GOVERNMENT FOR TAKING AS-BUILT PHOTOS AND UPDATING OF NASA REFERENCE DWG.
9. FOR N213 INDOOR/OUTDOOR SUBSTATION SITE PLAN – EXISTING/DEMO AND NEW WORK SEE DRAWING E13.
10. LIGHT LINES INDICATE EXISTING CONDITION AND DARK LINES INDICATE NEW WORK.
11. NEW CABLE ROUTING INSIDE THE MANHOLE IS SHOWN DIAGRAMMATICALLY. EXACT CABLE ROUTING INSIDE MANHOLE SHALL BE IN ACCORDANCE WITH DWG E69.

KEY NOTES

1. DISCONNECT AND REMOVE EXISTING CABLE FROM SWITCH 446 TO N213 SUBSTATION VCB447 SWITCHGEAR VIA MH E59.
2. PROVIDE 15kV, 3-1/C-350kCMIL, 133 % INS., EPR CABLE AND 1/C # 4/0 GND TO VCB 447. INSTALL FEEDER IDENTIFICATION TAG & PHASE IDENTIFICATION COLOR TAPE.
3. MANHOLE OPENING SIZE: 42" x 42" x 26" DEEP.
4. ALL INFORMATION INCLUDED IN THIS DETAIL IS CONSIDERED AS EXISTING CONDITIONS BASED ON LATEST KNOWN EXISTING DRAWINGS.

NASA REFERENCE DRAWINGS

A1---9801-E59 UNDERGROUND POWER DISTRIBUTION MANHOLE E59 DETAIL.

REGISTERED PROFESSIONAL ENGINEER JAMES T. McCUSKER No. E013699 ELECTRICAL STATE OF CALIFORNIA

Approved for Construction
Moffett Field Permit Board
Chief Building Official
Permit No. 11P038

ZONE	LETTER	DESCRIPTION	DRAWN	DATE	APPRVD

REVISIONS

DRAWN N.NIZAMOVA	DATE 9/21/11	
DESIGNED N.NIZAMOVA	DATE 9/21/11	
CHECKED J.McCUSKER	DATE 9-21-11	
PROJMGR F.JONES	DATE 9.23.11	
REQUESTER D.TRAN	DATE 9/23/11	
R&QA	DATE	
SAFETY	DATE	
SUPERVISOR S.FRANKEL	DATE OCT 21 2011	
	DATE	

Ames Research Center
Moffett Field, California

RESTORATION OF ELECTRICAL DISTRIBUTION SYSTEM-HIGH VOLTAGE WP1
N213 EAST INDOOR SUBSTATION
ELECTRICAL

MANHOLE NO. E59 DETAILS DEMOLITION & NEW WORK

SIZE	CAGE CODE	DWG NO.	REV
D	25307	A1---1001-E20	
SCALE NONE		INDEX SHEET 1 OF 1	

FILE NAME: A1---1001-E020_1_R7.DWG 9-21-11

60176753.0001

DWG: \\N213SQ1\Proj\REDS\60176753 (X10018)_REDS - High Voltage\300 CAD\REDS_HV-WP1\N213-Substation\E\Sheet\A1---1001-E020_1_RHV.dwg Version: 17.1s (LMS Tech) User: pdden
DATE: Sep 20, 2011 - 5:23:37 pm

DWG NO.	SH.	REV
A1---1001-E21	1	

SHEET NOTES

1. FOR GENERAL NOTES, SYMBOLS AND ABREVIATIONS, SEE DRAWING G4.
2. NOT ALL CONDUITS AND CONDUCTORS ARE SHOWN ON THE DRAWING.
3. SINGLE LINE DIAGRAM IS BASED ON THE LATEST KNOWN EXISTING DRAWINGS.
4. HATCHED LINES INDICATE EXISTING MATERIAL AND EQUIPMENT TO BE DEMOLISHED/ REMOVED, U.O.N.
5. PRIOR TO SHUTDOWN AND DEMOLITION WORK, CONTRACTOR SHALL PERFORM PHASE SEQUENCE TEST ON EXISTING SYSTEM IN THE PRESENCE OF THE CONTRACTING OFFICER. ALL DISCONNECTED CABLES THAT ARE TO REMAIN SHALL BE PROPERLY IDENTIFIED, TAGGED FOR RESTORATION IN NEW WORK.

KEY NOTES

1. REMOVE EXISTING 6.9kV PRIMARY SWITCHGEAR AND CIRCUIT BREAKER ACB492 AND ALL ASSOCIATED EQUIPMENT AND DEVICES.
2. REMOVE CONNECTION (CABLE) BETWEEN ACB492 AND TRANSFORMER T27.
3. EXISTING 15kV CABLE TO REMAIN IN PLACE.
4. REMOVE, PROTECT FROM DAMAGE AND TURN OVER TO THE GOVERNMENT.

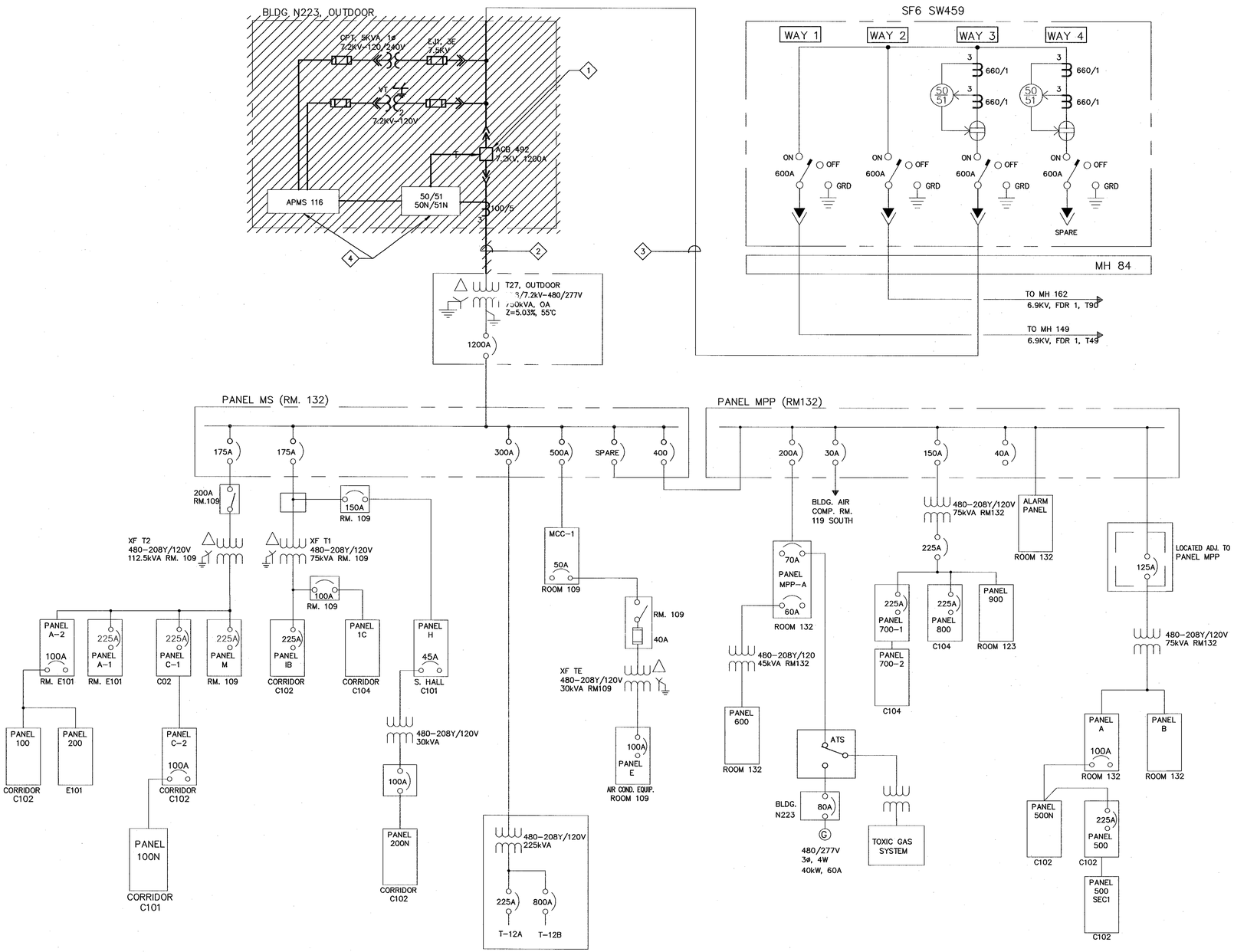

1 ONE LINE DIAGRAM – DEMOLITION
SCALE: NTS

REFERENCE DRAWINGS:

A1---6303-E0	BLDG INDEX, CROSS-REF, LEGEND & ABBR.
A1---5805-E30	SYSTEM A & B SINGLE LINE DIAGRAM
A1---9908-E162	N223 ONE LINE DIAGRAMS.
A1---0201-E30	7.2 KV DISTRIBUTION BLDG. POWER SYSTEM "A" & "B"

Approved for Construction
Moffett Field Permit Board
Chief Building Official
Permit No. 11P038

ZONE	LETTER	DESCRIPTION	DRAWN	DATE	APPRVD

REVISIONS

DRAWN	N.NIZAMOVA	DATE 9/21/11
DESIGNED	N.NIZAMOVA	DATE 9/21/11
CHECKED	J.McCUSKER	DATE 9-21-11
PROJMGR	F.JONES	DATE 9.23.11
REQUESTER	D.TRAN	DATE 9.23.11
R&QA		DATE
SAFETY		DATE
SUPERVISOR	S.FRANKEL	DATE OCT 24 2011

REGISTERED PROFESSIONAL ENGINEER JAMES T. McCUSKER No. E013699 ELECTRICAL STATE OF CALIFORNIA

Ames Research Center
Moffett Field, California

RESTORATION OF ELECTRICAL DISTRIBUTION SYSTEM-HIGH VOLTAGE WP1
N223 OUTDOOR SUBSTATION
ELECTRICAL

ONE LINE DIAGRAM DEMOLITION

SIZE	CAGE CODE	REV
D	25307	A
SCALE		INDEX SHEET 1 OF 1

FILE NAME: A1---1001-E021_1.DWG 9-21-11

60176753.0001

DWG: \\W21SS2\Proj\REDS\60176753 (K10018)_REDS - High Voltage\500 CAD\REDS_HV-WP1\W22S-Substation\E\Sheet\A1---1001-E021_1_RHV.dwg Version: 17.1s (LMS Tech) User: pdden
DATE: Sep 20, 2011 - 5:23:54 pm

DWG NO. A1---1001-E22 | SH. 1 | REV

BLDG N223 OUTDOOR SUBSTATION
15kV SWITCHGEAR

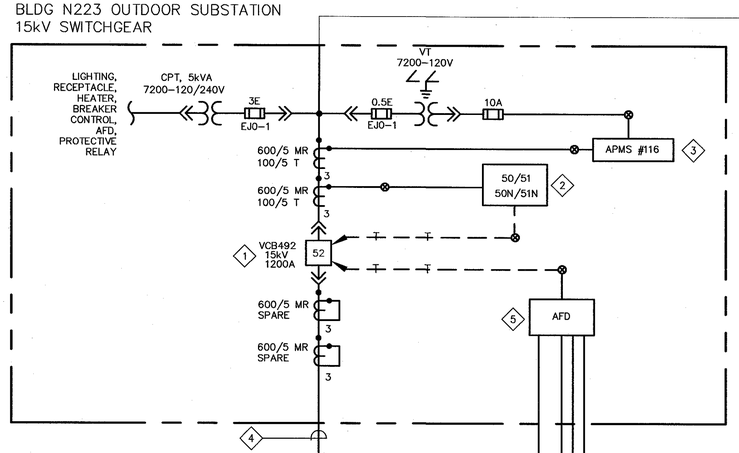

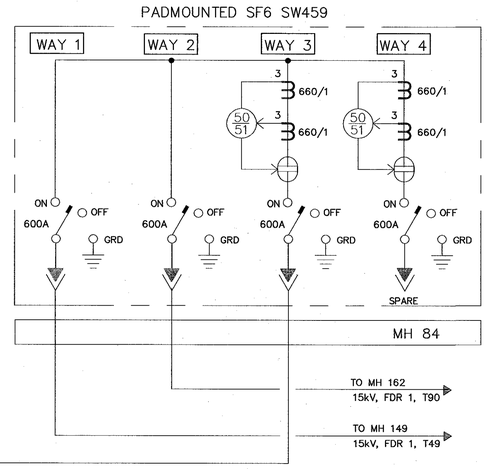

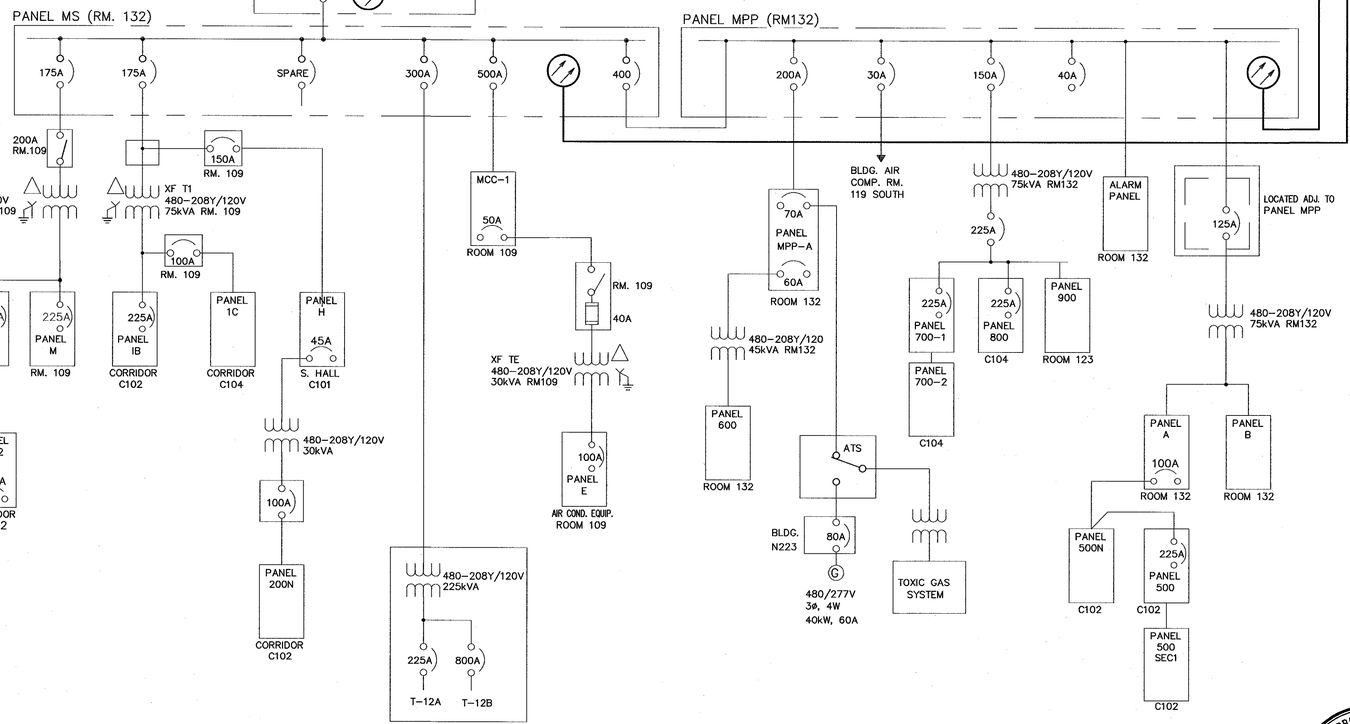

1 ONE LINE DIAGRAM – NEW WORK
SCALE: NTS

SHEET NOTES

1. FOR GENERAL NOTES, SYMBOLS AND ABREVIATIONS, SEE DRAWING G4.
2. SINGLE LINE DIAGRAM IS BASED ON THE LATEST KNOWN EXISTING NASA DRAWING.
3. LIGHT LINES DENOTE EXISTING MATERIAL/ EQUIPMENT TO REMAIN.
4. ALL INDOOR EQUIPMENT TO BE RATED FOR USE IN NEMA 12 ENVIRONMENT, MINIMUM.
5. NOT ALL CONDUITS AND CONDUCTORS ARE SHOWN ON DWG.
6. DARK OR HEAVY LINES INDICATE NEW MATERIAL/EQUIPMENT TO BE PROVIDED. U.O.N.
7. THE DIAGRAM IS PROVIDED FOR GUIDANCE ONLY. THE CONTRACTOR SHALL FIELD VERIFY ALL EXISTING EQUIPMENT INCLUDING TERMINAL BLOCKS, TERMINAL IDENTIFICATION NUMBER, CONNECTIONS ETC. AND REVISE DRAWINGS AS NEEDED TO MATCH EXISTING AND NEW EQUIPMENT TO PROVIDE A COMPLETE FUNCTIONAL SYSTEM.
8. ALL CT WIRES SHALL BE #10 AWG MINIMUM, TYPE SIS. ALL VOLTAGE, CPT SECONDARY AND BREAKER TRIP WIRES SHALL BE #12 AWG MINIMUM, TYPE SIS. U.O.N.
9. CONTRACTOR SHALL FIELD VERIFY ALL EQUIPMENT RATING PRIOR TO ORDERING ANY MATERIALS.
10. CPT AND VT'S SHALL BE DRAWOUT TYPE.
11. SEE DRAWING E28 FOR THREE LINE DIAGRAM AND E29 FOR BREAKER CONTROL DIAGRAM.
12. SEE DRAWING E63 FOR NAMEPLATE SCHEDULE.

KEY NOTES

1. PROVIDE NEW 15kV, 1200A SWITCHGEAR WITH VACUUM CIRCUIT BREAKER VCB492, CPT, VT AND ALL ACCESSORIES PER SPECIFICATION SECTION 26 13 00.00 20.
2. INSTALL GFE ALSTOM RELAY COMPLETELY WIRED INTO THE NEW SWITCHGEAR. INSTALLATION SHALL BE IN ACCORDANCE WITH DRAWINGS E64 & E68.
3. INSTALL GFE 3–PHASE DIGITAL POWER METER COMPLETELY WIRED INTO THE NEW SWITCHGEAR. INSTALLATION SHALL BE IN ACCORDANCE WITH DRAWING E64 & 68.
4. PROVIDE 3#2AWG 15kV CABLES BETWEEN VCB492 AND (E) TRANSFORMER T27 IN (E) CONDUIT.
5. INSTALL ARC FLASH DETECTOR COMPLETELY WIRED INTO THE NEW SWITCHGEAR. INSTALLATION SHALL BE IN ACCORDANCE WITH MANUFACTURER'S RECOMENDATIONS.

Approved for Construction
Moffett Field Permit Board
Chief Building Official
Permit No. 11P038

ZONE	LETTER	DESCRIPTION	DRAWN	DATE	APPRVD

REVISIONS

DRAWN N.NIZAMOVA		DATE 9/2/11
DESIGNED N.NIZAMOVA		DATE 9/2/11
CHECKED J.McCLUSKER		DATE 9-2-11
PROJMGR F.JONES	Tom Jones	DATE 9.23.11
REQUESTER D.TRAN		DATE 9.26.11
R&QA		DATE
SAFETY		DATE
SUPERVISOR S.FRANKEL	OCT 21 2011	DATE

REGISTERED PROFESSIONAL ENGINEER JAMES T. McCLUSKEY No. ED13699 ELECTRICAL STATE OF CALIFORNIA

Ames Research Center
Moffett Field, California

RESTORATION OF ELECTRICAL DISTRIBUTION SYSTEM–HIGH VOLTAGE WP1
N223 OUTDOOR SUBSTATION
ELECTRICAL

ONE LINE DIAGRAM NEW WORK

SIZE	CAGE CODE	REV
D	25307	A
SCALE		INDEX SHEET 1 OF 1

FILE NAME: A1----1001-E022_1.DWG 9-21-11

60176753.0001

DWG: \\N223FS2\Proj\NEDS\60176753 (K10018)_NEDS - High Voltage\500 CAD\NEDS_-HV-WP1\W223-Substation\E\Sheet\A1----1001-E022_1_RHV.dwg Version: 17.1s (LMS Tech) User: palden
DATE: Sep 20, 2011 - 5:23:59 pm

DWG NO.	SH.	REV
A1---1001-E23	1	

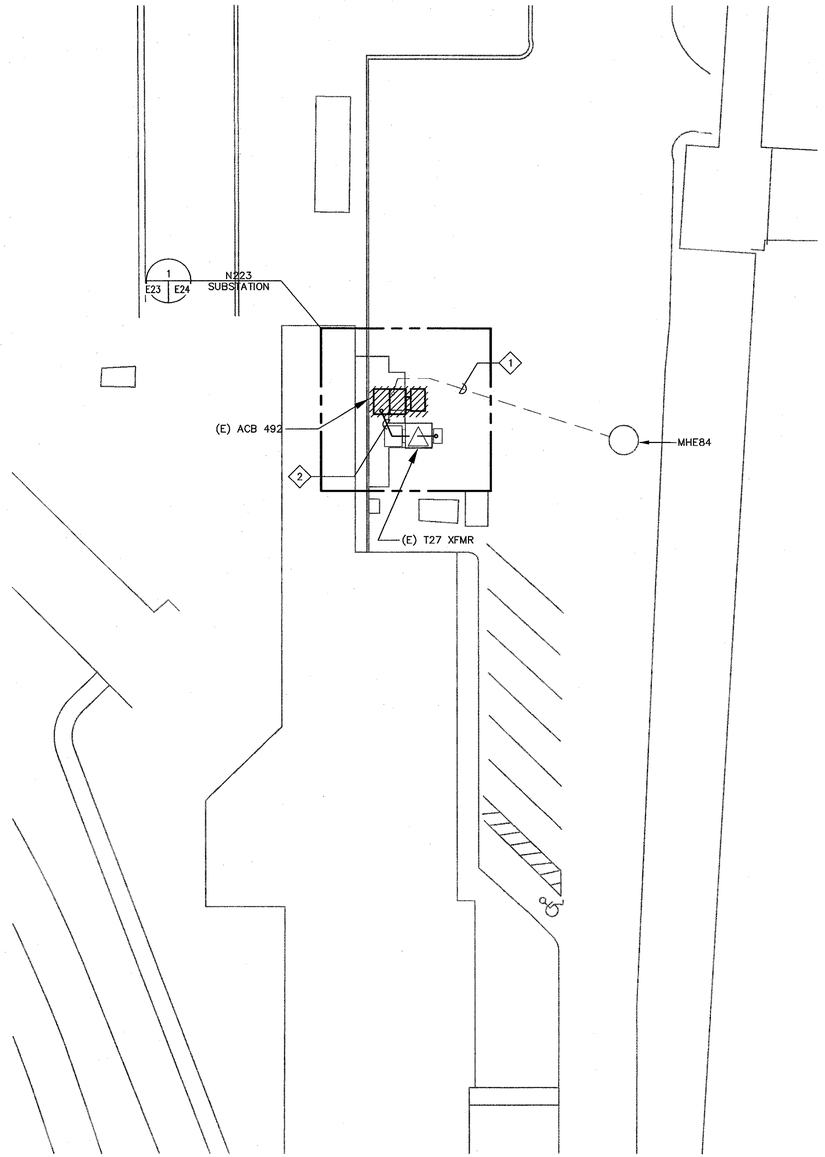

1 SITE PLAN – DEMOLITION
SCALE: 1"=20'

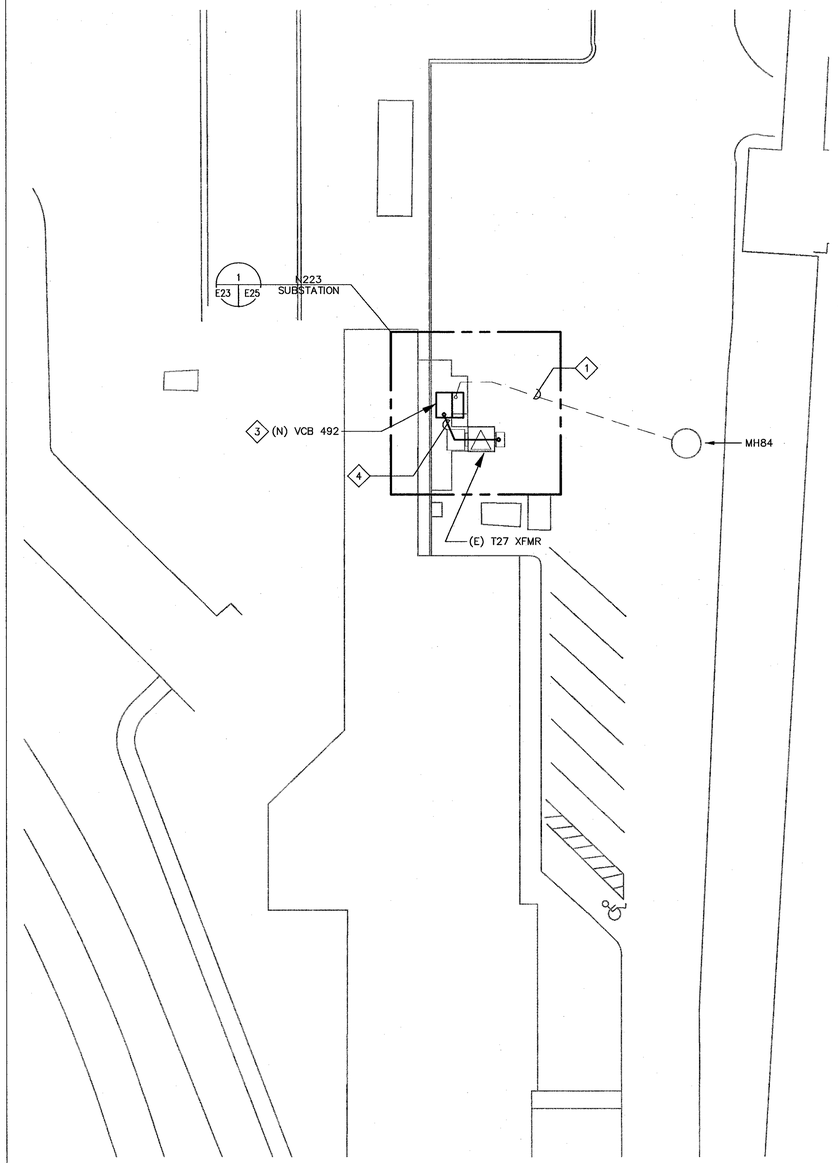

2 SITE PLAN – NEW WORK
SCALE: 1"=20'

SHEET NOTES

1. FOR GENERAL NOTES, SYMBOLS AND ABREVIATIONS, SEE DRAWING G4.
2. NOT ALL CONDUITS AND CONDUCTORS ARE SHOWN ON THE DWG.
3. HATCHED LINES INDICATE EXISTING MATERIAL/EQUIPMENT TO BE DEMOLISHED AND REMOVED, U.O.N.
4. CONTRACTOR SHALL FIELD VERIFY ALL MEASUREMENTS AT THE SITE AND SHALL BE RESPONSIBLE FOR THEIR ACCURACY PRIOR TO STARTING ANY WORK OR ORDERING ANY MATERIAL.

KEY NOTES

1. (E) 15kV CABLES TO REMAIN IN PLACE.
2. (E) CABLE FROM ACB 492 TO TRANSFORMER T27 SHALL BE REMOVED. (E) UNDERGROUND CONDUIT TO REMAIN FOR REUSE IN NEW WORK.
3. PROVIDE NEW 15kV, 1200A SWITCHGEAR WITH VACUUM CIRCUIT BREAKER VCB492, CPT, VT AND ALL ACCESSORIES PER SPECIFICATION SECTION 26 13 00.00 20.
4. PROVIDE NEW 15kV CABLES FROM (N) VCB 492 TO (E) TRANSFORMER T27 IN (E) CONDUIT. SEE ONE LINE DIAGRAM ON DRAWING E22 FOR DETAILS.

Approved for Construction
Moffett Field Permit Board

Chief Building Official
Permit No. 11P038

ZONE	LETTER	DESCRIPTION	DRAWN	DATE	APPRVD

REVISIONS

REGISTERED PROFESSIONAL ENGINEER
JAMES T. McCUSKER
No. E013699
ELECTRICAL
STATE OF CALIFORNIA

DRAWN P.ALDEN		DATE 9-22-11
DESIGNED N.NIZAMOVA		DATE 9/21/11
CHECKED J.McCUSKER		DATE 9-21-11
PROJMGR F.JONES		DATE 9.23.11
REQUESTER D.TRAN		DATE 9/26/11
R&QA		DATE
SAFETY		DATE
SUPERVISOR S.FRANKEL		DATE OCT 21 2011

Ames Research Center
Moffett Field, California

RESTORATION OF ELECTRICAL DISTRIBUTION SYSTEM–HIGH VOLTAGE WP1
N223 OUTDOOR SUBSTATION
ELECTRICAL

SITE PLANS
DEMOLITION & NEW WORK

SIZE	CAGE CODE	REV
D	25307	A 1---1001-E23
SCALE	INDEX	SHEET 1 OF 1

FILE NAME: A1---1001-023_1_R7.DWG 9-21-11

1"=20'-0" 0 10 20 40 60

60176753.0001

DWG: \\N213FS2\Proj\REDS\60176753 (K10018)_REDS - High Voltage\500 CAD\REDS_HV-WP1\N223-Substation\E\Sheet\A1---1001-E023_1_RHV.dwg Version: 17.1s (LMS Tech) User: palden
DATE: Sep 20, 2011 - 5:24:04 pm

DWG NO. A1---1001-E24 | SH. 1 | REV

SHEET NOTES

1. FOR GENERAL NOTES, SYMBOLS AND ABBREVIATIONS, SEE DRAWING G4.
2. HATCHED LINES INDICATE EXISTING MATERIAL/EQUIPMENT TO BE DEMOLISHED AND REMOVED U.O.N.
3. ALL EXISTING CONDUITS AND CONDUCTORS SHALL BE DISCONNECTED FROM (E) EQUIPMENT TO BE DEMOLISHED AND RECONNECTED TO NEW EQUIPMENT, CONTRACTOR SHALL DETERMINE IN FIELD AND RELOCATE/EXTEND OR REPLACE (E) CONDUITS AND CONDUCTORS (MATCH EXISTING SIZE) TO COMPLETE CONNECTIONS TO NEW AND EXISTING EQUIPMENT.
4. EXISTING GROUNDING SYSTEM TO REMAIN FOR RECONNECTION IN NEW WORK.
5. PRIOR TO SHUTDOWN AND DEMOLITION WORK, CONTRACTOR SHALL PERFORM PHASE SEQUENCE TEST ON EXISTING SYSTEM/EQUIPMENT IN THE PRESENCE OF COTR.

KEY NOTES

1. PULL THE (E) CABLES BACK TO THE MANHOLE MHE84 FOR LATER RECONNECTION.
2. REMOVE (E) 7.2kV ACB542 SWITCHGEAR AND ALL ASSOCIATED EQUIPMENT.

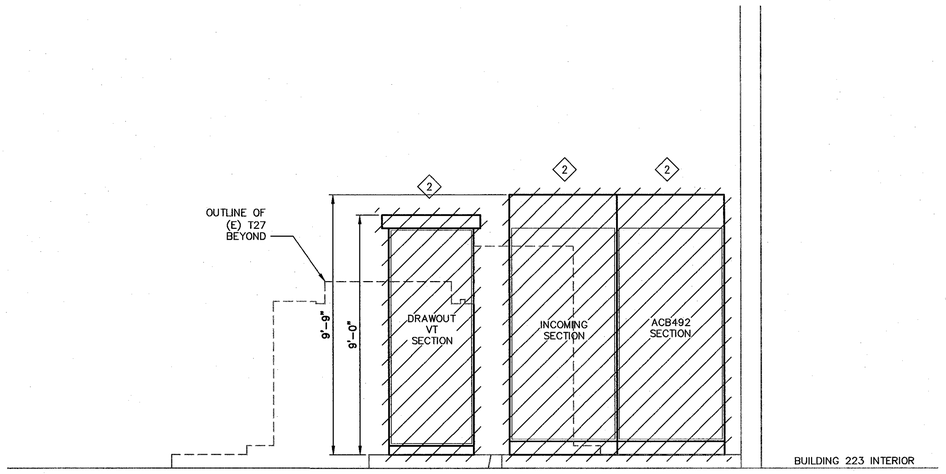

A E24 | E24 ELEVATION – DEMOLITION
SCALE: 3/8"=1'-0"

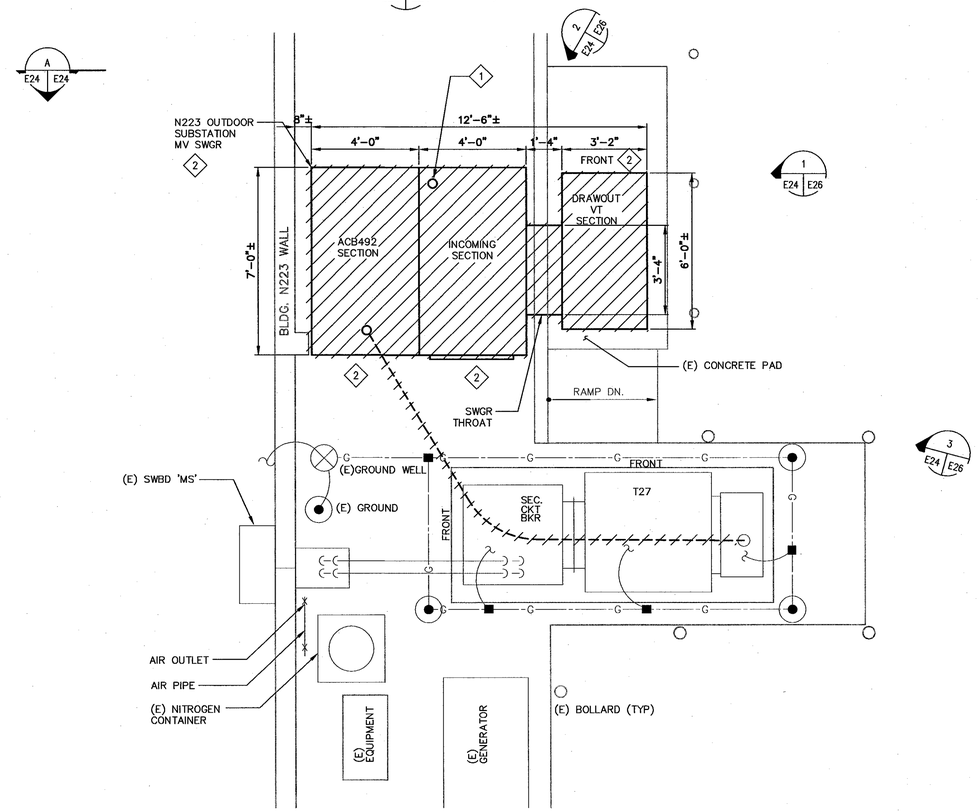

1 E23 | E24 EQUIPMENT PLAN – DEMOLITION
SCALE: 3/8"=1'-0"

3/8"=1' 0 1 2 4 6 8

REGISTERED PROFESSIONAL ENGINEER JAMES T. McCUSKER No. E013699 ELECTRICAL STATE OF CALIFORNIA

Approved for Construction
Moffett Field Permit Board

Chief Building Official
Permit No. 11P038

ZONE	LETTER	DESCRIPTION	DRAWN	DATE	APPRVD
		REVISIONS			

DRAWN N.NIZAMOVA	DATE 9/21/11	Ames Research Center, Moffett Field, California
DESIGNED N.NIZAMOVA	DATE 9/21/11	
CHECKED J.McCUSKER	DATE 9-21-11	RESTORATION OF ELECTRICAL DISTRIBUTION SYSTEM–HIGH VOLTAGE WP1 N223 OUTDOOR SUBSTATION ELECTRICAL
PROJMGR F.JONES	DATE 9.23.11	EQUIPMENT PLAN & ELEVATION DEMOLITION
REQUESTER D.TRAN	DATE 9/21/11	
R&QA	DATE	
SAFETY	DATE	
SUPERVISOR S.FRANKEL	DATE OCT 21 2011	SIZE D · CAGE CODE 25307 · A 1---1001-E24 · REV
		SCALE · INDEX · SHEET 1 OF 1

FILE NAME: A1---1001-024_1_R7.DWG 9-21-11

60176753.0001

DWG: \\N213FS2\Proj\REDS\60176753 (X10018)_REDS - High Voltage\500 CAD\REDS_HV-WP1\N223-Substation\E\Sheet\A1---1001-E024_1_RHV.dwg Version: 17.1s (LMS Tech) User: palden
DATE: Sep 21, 2011 - 1:53:47 pm

DWG NO.	SH.	REV
A1---1001-E25	1	

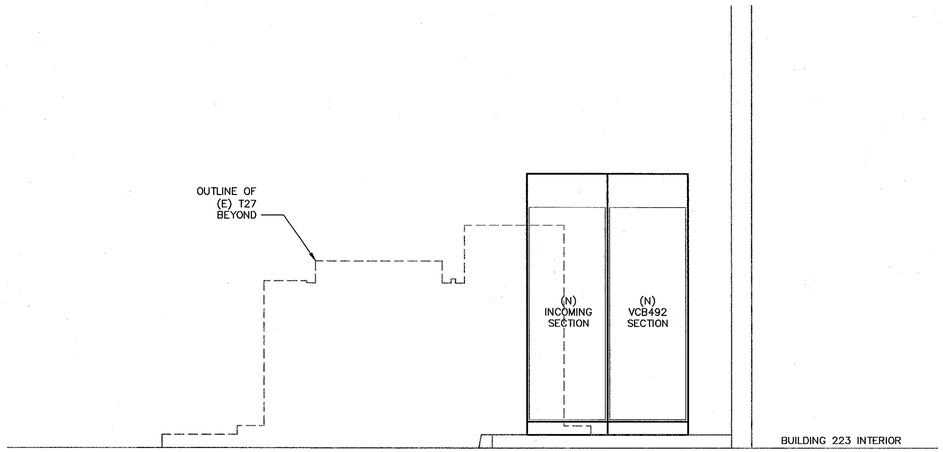

A ELEVATION – NEW WORK
E25 | E25 SCALE: 3/8"=1'-0"

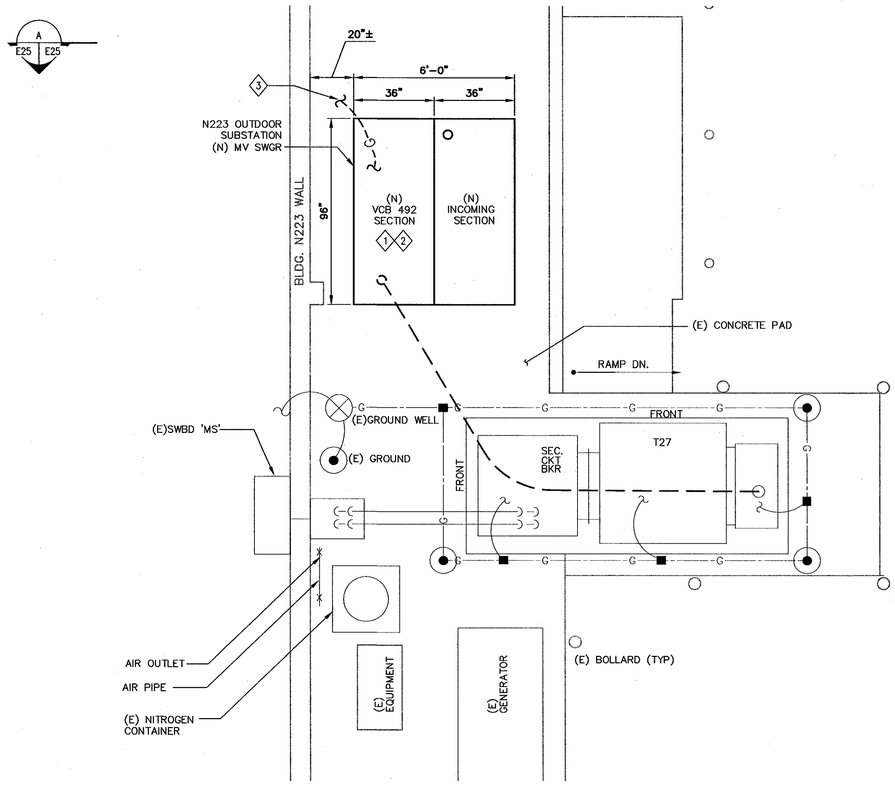

1 EQUIPMENT PLAN – NEW WORK
E23 | E25 SCALE: 3/8"=1'-0"

SHEET NOTES

1. FOR GENERAL CONSTRUCTION NOTES, SYMBOLS AND ABREVIATIONS SEE DRAWING G4.
2. HEAVY LINES INDICATE NEW MATERIAL/EQUIPMENT TO BE PROVIDED. LIGHT LINES DENOTE EXISTING CONDITIONS, MATERIALS AND EQUIPMENT TO REMAIN.
3. CONTRACTOR SHALL FIELD VERIFY ALL MEASUREMENTS AT THE SITE AND SHALL BE RESPONSIBLE FOR THEIR ACCURACY PRIOR TO STARTING ANY WORK OR ORDERING ANY MATERIAL.
4. ALL OUTDOOR EQUIPMENT SHALL BE NEMA 3R.
5. ALL EXISTING CONDUITS AND CONDUCTORS SHALL BE RECONNECTED TO NEW EQUIPMENT.
6. DIMENSION SHOWN ARE FOR GUIDANCE ONLY. CONTRACTOR SHALL VERIFY CONDUIT STUB-UP & EQUIPMENT DIMENSIONS BEFORE INSTALLATION.
7. ELECTRICAL EQUIPMENT SHALL BE SUPPORTED AND ANCHORED IN ACCORDANCE WITH CALIFORNIA BUILDING CODE SEISMIC REQUIREMENTS.
8. PRIOR TO ENERGIZATION, CONFIRM THAT PHASE SEQUENCE MATCHES THAT RECORDED IN SHEET NOTE 6, DRAWING E14.

KEY NOTES

1. PROVIDE 15kV, 1200A VACUUM CIRCUIT BREAKER SWITCHGEAR VCB492 INCLUDING CPT, VT AND ALL ACCESSORIES PER SPECIFICATION SECTION 26 13 00.00 20.
2. PROVIDE NEW CAT 5E WIRES FROM APMS TO COMMUNICATION ROOM. PROVIDE ADDITIONAL 25 FEET OF CABLE AND RJ-45 CONNECTORS AT EACH END. NO SPLICING ON THIS CABLE! ETHERNET CABLE HOOK UP TO COMMUNICATION PANEL AND APMS WILL BE PERFORMED BY OTHERS. EXTEND (E) CONDUIT TO NEW APMS LOCATION AS NECESSARY. SEE KEY PLAN THIS DRAWING FOR COMMUNICATION ROOM LOCATION.
3. CONNECT NEW EQUIPMENT TO EXISTING GROUNDING SYSTEM WITH #4/0 AWG BARE COPPER CONDUCTOR.

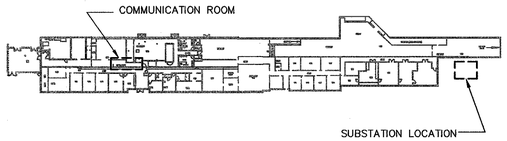

KEY PLAN

Approved for Construction
Moffett Field Permit Board
Chief Building Official
Permit No. 11P038

ZONE	LETTER	DESCRIPTION	DRAWN	DATE	APPRVD
		REVISIONS			

REGISTERED PROFESSIONAL ENGINEER
JAMES T. McCUSKER
No. ED13699
ELECTRICAL
STATE OF CALIFORNIA

3/8"=1' 0 1 2 4 6 8

DRAWN N.NIZAMOVA		DATE 9/21/11
DESIGNED N.NIZAMOVA		DATE 9/21/11
CHECKED J.McCUSKER		DATE 9-21-11
PROJMGR F.JONES		DATE 9.23.11
REQUESTER D.TRAN		DATE 9/26/11
R&QA		DATE
SAFETY		DATE
SUPERVISOR S.FRANKEL	OCT 21 2011	DATE

Ames Research Center
Moffett Field, California

RESTORATION OF ELECTRICAL DISTRIBUTION SYSTEM-HIGH VOLTAGE WP1
N223 OUTDOOR SUBSTATION
ELECTRICAL

EQUIPMENT PLAN & ELEVATION NEW WORK

SIZE	CAGE CODE	DWG NO.	REV
D	25307	A1---1001-E25	
SCALE		INDEX	SHEET 1 OF 1

FILE NAME: A1---1001-025_1_R7.DWG 9-21-11

60176753.0001

DWG: \\V213FS2\Proj\REDS\60176753 (K10018)_REDS - High Voltage\500 CAD\REDS_HV-WP1\N223-Substation\E\Sheet\A1---1001-E025_1_RHV.dwg Version: 17.1s (LMS Tech) User: pdden
DATE: Sep 20, 2011 - 5:24:14 pm

DWG NO. A1---1001-E26 | SH. 1 | REV

SHEET NOTES

1. FOR GENERAL NOTES, SYMBOLS AND ABREVIATIONS, SEE DRAWING G4.

KEY NOTES

1. (E) ACB492.
2. (E) SPRINKLER SYSTEM RISER.
3. (E) VOLTAGE TRANSFORMER.
4. (E) T27.

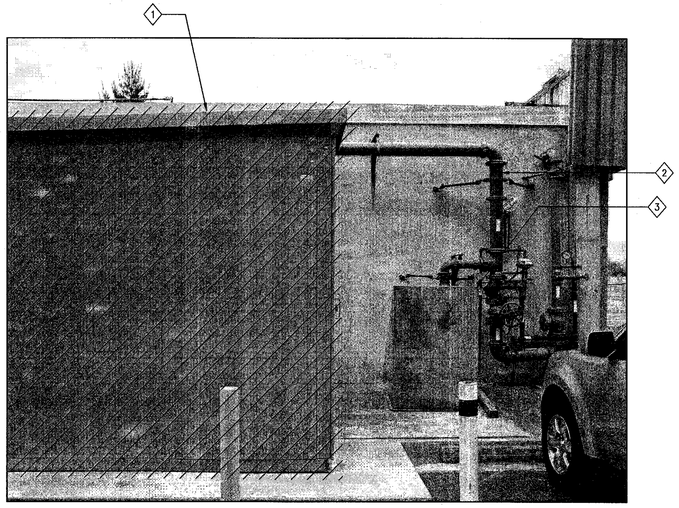

1 E24 E26 6.9KV SWGR
SCALE: NTS

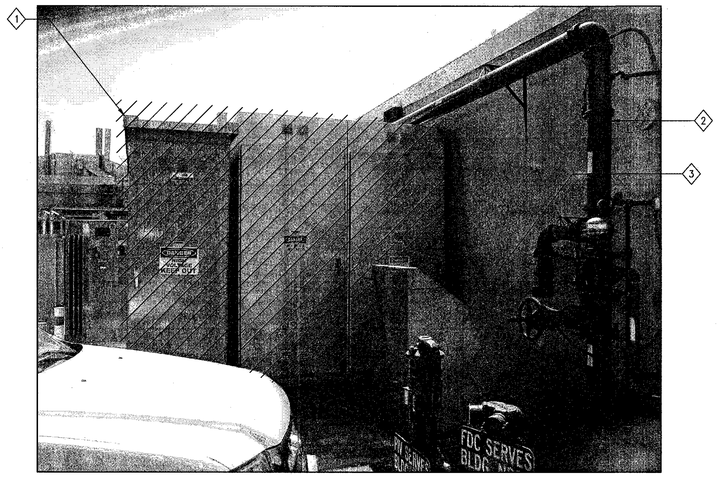

2 E24 E26 6.9KV SWGR
SCALE: NTS

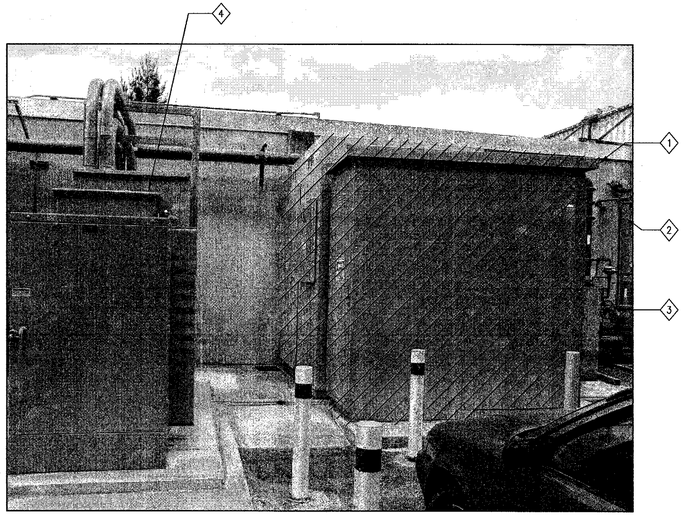

3 E24 E26 6.9KV SWGR
SCALE: NTS

Approved for Construction
Moffett Field Permit Board
Chief Building Official
Permit No. 11P038

ZONE	LETTER	DESCRIPTION	DRAWN	DATE	APPRVD

REVISIONS

DRAWN N.NIZAMOVA		DATE 9/21/11
DESIGNED N.NIZAMOVA		DATE 9/21/11
CHECKED J.McCUSKER		DATE 9-21-11
PROJMGR F.JONES		DATE 9.23.11
REQUESTER D.TRAN		DATE 9.26.11
R&GA		DATE
SAFETY		DATE
SUPERVISOR S.FRANKEL	OCT 21 2011	DATE

REGISTERED PROFESSIONAL ENGINEER
JAMES T. McCUSKER
No. E013699
ELECTRICAL
STATE OF CALIFORNIA

Ames Research Center
Moffett Field, California

RESTORATION OF ELECTRICAL DISTRIBUTION SYSTEM-HIGH VOLTAGE WP1
N223 OUTDOOR SUBSTATION
ELECTRICAL

PHOTOGRAPHIC DETAILS DEMOLITION

SIZE	CAGE CODE	REV
D	25307	A 1---1001-E26
SCALE		INDEX SHEET 1 OF 1

FILE NAME: A1---1001-026_1.DWG 9-21-11

60176753.0001

DWG: \\Vf13fs2\Proj\KEDS\60176753 (K10018)_KEDS - High Voltage\500 CAD\KEDS_HV-WP1\N223-Substation\S\Sheet\A1---1001-E026_1_PHY.dwg Version: 17.1s (LMS Tech) User: pdoen
DATE: Sep 20, 2011 - 5:24:19 pm

DWG NO. A1---1001-E27 | SH. 1 | REV

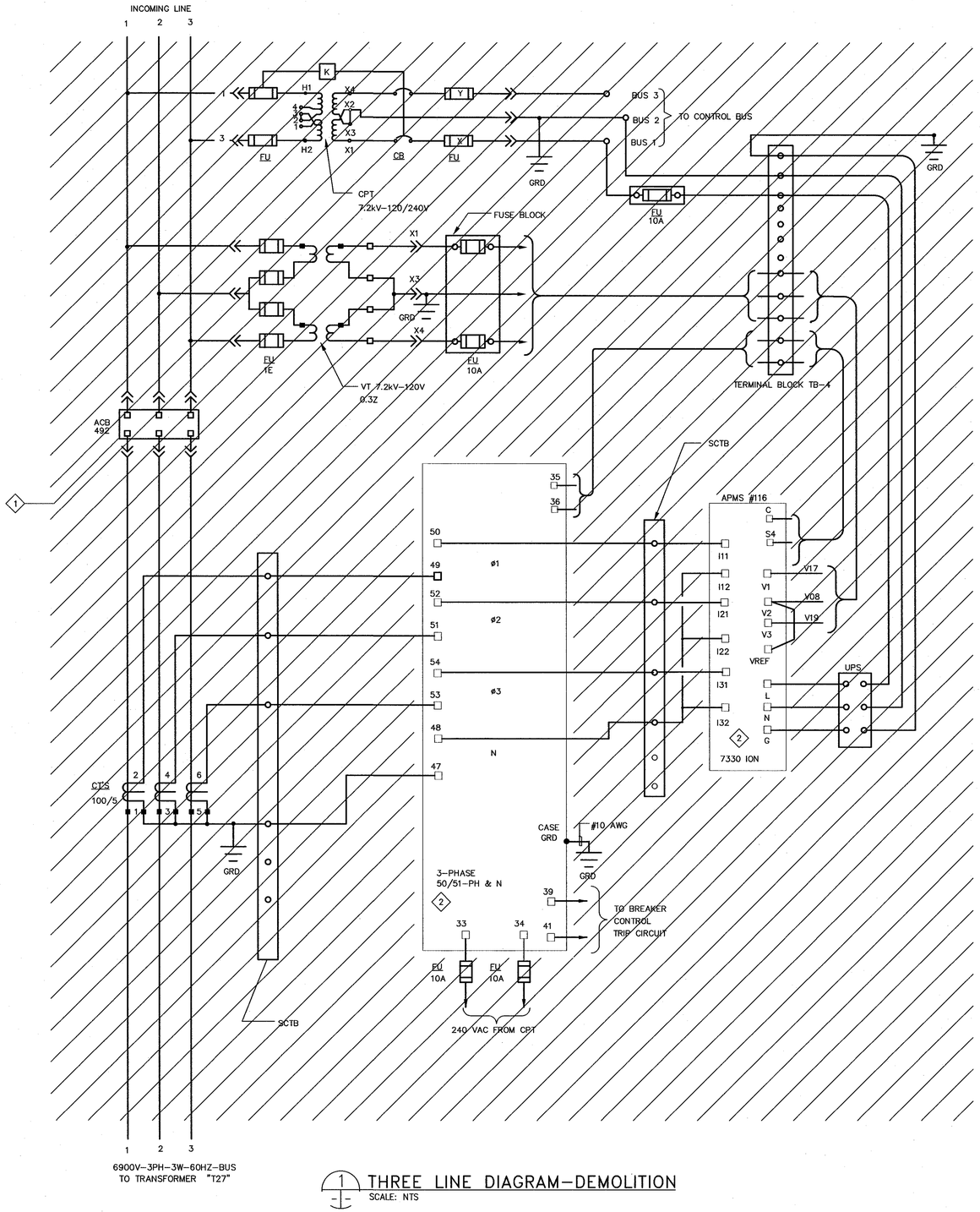

1 THREE LINE DIAGRAM–DEMOLITION
SCALE: NTS

SHEET NOTES

1. FOR GENERAL NOTES, SYMBOLS AND ABBREVIATIONS, SEE DRAWING G4.
2. NOT ALL CONDUITS AND CONDUCTORS ARE SHOWN ON DWG.
3. HATCHED LINES INDICATE EXISTING MATERIALS AND EQUIPMENT TO BE DEMOLISHED AND REMOVED.
4. THE DIAGRAM IS PROVIDED FOR GUIDANCE ONLY. THE CONTRACTOR SHALL FIELD VERIFY ALL EXISTING EQUIPMENT INCLUDING TERMINAL BLOCKS, TERMINAL IDENTIFICATION NUMBER, CONNECTIONS ETC. AND REVISE DRAWINGS AS NEEDED TO MATCH EXISTING AND NEW EQUIPMENT TO PROVIDE A COMPLETE FUNCTIONAL SYSTEM.

KEY NOTES

1. DISCONNECT AND REMOVE EXISTING ACB SWITCHGEAR AND ALL ASSOCIATED DEVICES AND ACCESSORIES.
2. REMOVE, PROTECT FROM DAMAGE AND TURN OVER TO THE GOVERNMENT.

Approved for Construction
Moffett Field Permit Board
Chief Building Official
Permit No. 11P038

ZONE	LETTER	DESCRIPTION	DRAWN	DATE	APPRVD

REVISIONS

DRAWN N.NIZAMOVA		DATE 9/21/11
DESIGNED N.NIZAMOVA		DATE 9/21/11
CHECKED J.McCUSKER		DATE 9-21-11
PROJMGR F.JONES		DATE 9.23.11
REQUESTER D.TRAN		DATE 9/22/11
R&QA		DATE
SAFETY		DATE
SUPERVISOR S.FRANKEL		DATE OCT 21 2011
		DATE

REGISTERED PROFESSIONAL ENGINEER JAMES T. McCUSKER No. E013699 ELECTRICAL STATE OF CALIFORNIA

Ames Research Center
Moffett Field, California

RESTORATION OF ELECTRICAL DISTRIBUTION SYSTEM–HIGH VOLTAGE WP1
N223 OUTDOOR SUBSTATION
ELECTRICAL

THREE LINE DIAGRAM DEMOLITION

SIZE	CAGE CODE	REV
D	25307	A
SCALE	INDEX	SHEET 1 OF 1

FILE NAME: A1---1001-E027_1.DWG 9-21-11

60176753.0001

DWG: \\N213FS2\Pro\RESS\60176753 (X10018)_RESS – High Voltage\500 CAD\RESS_MV-WP1\N223-Substation\E\Sheet\A1---1001-E027_1_RHV.dwg Version: 17.1s (LMS Tech) User: pdsen
DATE: Sep 20, 2011 – 5:24:25 pm

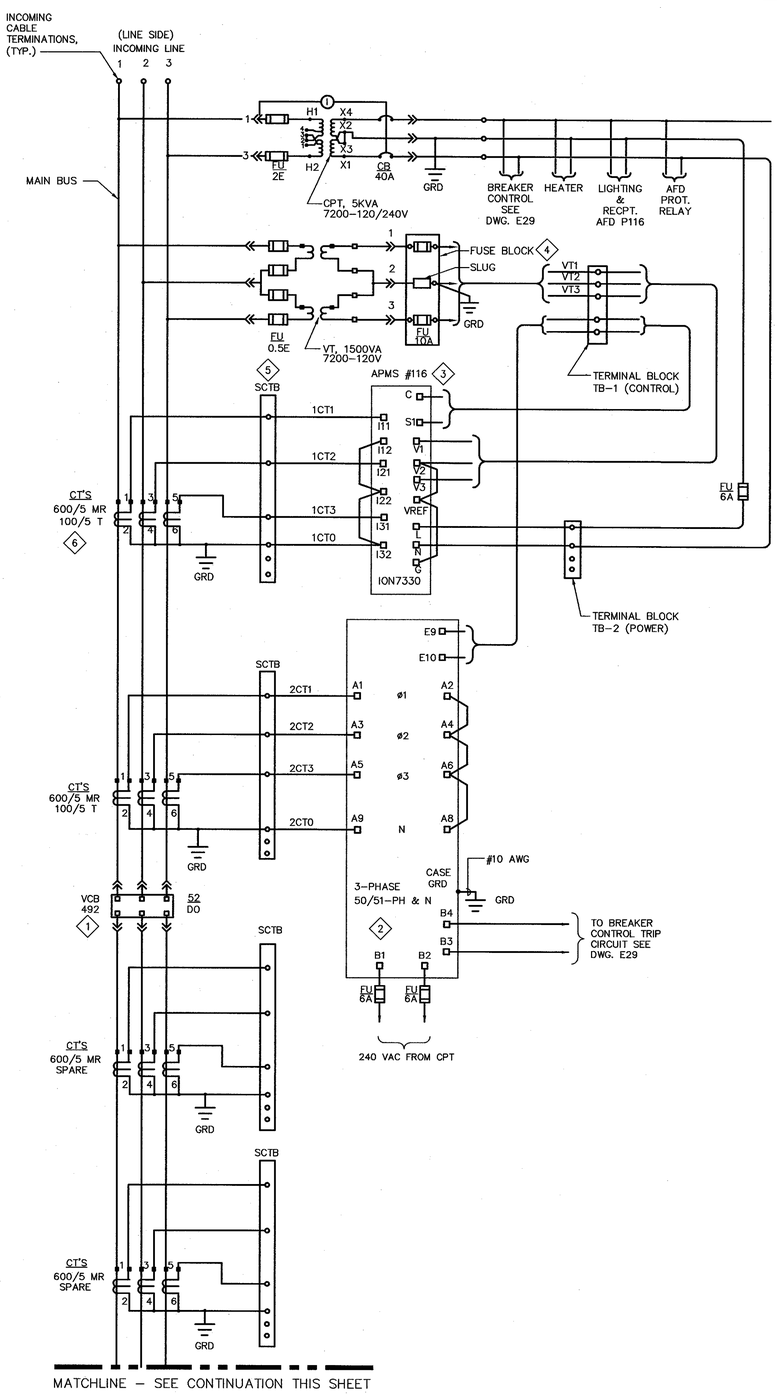

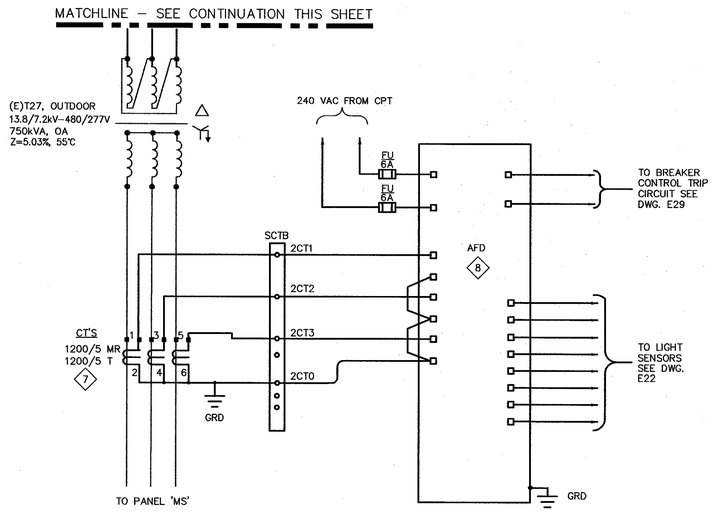

SHEET NOTES

1. FOR GENERAL NOTES, SYMBOLS AND ABBREVIATIONS, SEE DRAWING G4.
2. DARK OR HEAVY LINES INDICATE NEW MATERIAL/EQUIPMENT TO BE PROVIDED. U.O.N.
3. THE DIAGRAM IS PROVIDED FOR GUIDANCE ONLY. THE CONTRACTOR SHALL FIELD VERIFY ALL EXISTING EQUIPMENT INCLUDING TERMINAL BLOCKS, TERMINAL IDENTIFICATION NUMBER, CONNECTIONS ETC. AND REVISE DRAWINGS AS NEEDED TO MATCH EXISTING AND NEW EQUIPMENT TO PROVIDE A COMPLETE FUNCTIONAL SYSTEM.
4. ALL CT WIRES SHALL BE #10 AWG MINIMUM, TYPE SIS. ALL VOLTAGE, CPT SECONDARY AND BREAKER TRIP WIRES SHALL BE #12 AWG MINIMUM, TYPE SIS. U.O.N.
5. SEE DRAWING E22 FOR SINGLE LINE DIAGRAM.

KEY NOTES

1. PROVIDE NEW 15KV, 1200A SWITCHGEAR WITH 15KV VACUUM CIRCUIT BREAKER AND ACCESSORIES PER SPECIFICATION.
2. INSTALL GFE ALSTOM RELAY COMPLETELY WIRED INTO THE NEW EQUIPMENT.
3. INSTALL GFE DIGITAL POWER METER COMPLETELY WIRED INTO THE NEW EQUIPMENT.
4. PROVIDE FUSE BLOCK, FLEXCORE KLK–3 OR APPROVED EQUAL.
5. PROVIDE (5) CIRCUIT SHORTING TERMINAL BLOCKS (SCTB), FLEXCORE 1KU6SC OR APPROVED EQUAL.
6. PROVIDE (2) SETS OF 3 WINDOW–TYPE MULTI–RATIO CT'S ON THE LINE SIDE OF THE BREAKER. PROVIDE (2) ADDITIONAL SPARE SETS OF CT'S ON THE LOAD SIDE OF THE BREAKER. ALL CT'S SHALL BE C200 ACCURACY.
7. PROVIDE (1) SET OF 3 WINDOW–TYPE MULTI–RATIO CT'S ON THE LOAD SIDE OF THE TRANSFORMER. CT'S SHALL BE C400 ACCURACY.
8. INSTALL ARC FLASH DETECTOR COMPLETELY WIRED INTO THE NEW SWITCHGEAR. INSTALLATION SHALL BE IN ACCORDANCE WITH MANUFACTURER'S RECOMENDATIONS.

1 THREE LINE DIAGRAM–NEW WORK
SCALE: NTS

Approved for Construction
Moffett Field Permit Board
Chief Building Official
Permit No. 11P038

ZONE	LETTER	DESCRIPTION	DRAWN	DATE	APPRVD

REVISIONS

DRAWN	N.NIZAMOVA	DATE 9/21/11
DESIGNED	N.NIZAMOVA	DATE 9/21/11
CHECKED	J.McCUSKER	DATE 9-21-11
PROJMGR	F.JONES	DATE 9.23.11
REQUESTER	D.TRAN	DATE 9/26/11
R&QA		DATE
SAFETY		DATE
SUPERVISOR	S.FRANKEL	DATE OCT 31 2011
		DATE

REGISTERED PROFESSIONAL ENGINEER JAMES T. McCUSKER No. E013699 ELECTRICAL STATE OF CALIFORNIA

Ames Research Center
Moffett Field, California

RESTORATION OF ELECTRICAL DISTRIBUTION SYSTEM–HIGH VOLTAGE WP1
N223 OUTDOOR SUBSTATION
ELECTRICAL

THREE LINE DIAGRAM
NEW WORK

SIZE	CAGE CODE	DWG NO.	REV
D	25307	A1–––1001–E28	1
SCALE		INDEX SHEET 1 OF 1	

FILE NAME: A1–––1001–E028_1.DWG 9–21–11

60176753.0001

DWG: \\N213FS2\Proj\REDS\60176753 (K10018)_REDS – High Voltage\500 CAD\REDS_HV–WP1\N223–Substation\E\Sheet\A1–––1001–E028_1_RHF.dwg Version: 17.1s (LMS Tech) User: polden
DATE: Sep 20, 2011 - 5:24:29 pm

DWG NO.	SH.	REV
A1---1001-E29	1	

SHEET NOTES

1. FOR GENERAL NOTES, SYMBOLS AND ABREVIATIONS, SEE DRAWING G4.
2. HATCHED LINES INDICATE EXISTING MATERIAL/EQUIPMENT TO BE DEMOLISHED AND REMOVED. U.O.N.
3. DARK OR HEAVY LINES INDICATE NEW MATERIAL/EQUIPMENT TO BE PROVIDED. U.O.N.
4. THE DIAGRAMS ARE PROVIDED FOR GUIDANCE ONLY. THE CONTRACTOR SHALL FIELD VERIFY ALL EXISTING EQUIPMENT INCLUDING TERMINAL BLOCKS, TERMINAL IDENTIFICATION NUMBER, CONNECTIONS ETC. AND REVISE DRAWINGS AS NEEDED TO MATCH EXISTING AND NEW EQUIPMENT TO PROVIDE A COMPLETE FUNCTIONAL SYSTEM.
5. THE CONTROL DIAGRAM IS BASED ON THE LATEST KMOWN EXISTING DRAWINGS.
6. NEW TERMINAL MARKINGS ARE BASED ON CUTLER HAMMER INFORMATION.

KEY NOTES

1. DISCONNECT AND REMOVE EXISTING VCB492 SWITCHGEAR INCLUDING ALL ASSOCIATED DEVICES AND ACESSORIES.
2. REMOVE ALSTOM RELAY FROM (E) SWITCHGEAR AND TURN OVER TO THE GOVERNMENT.
3. TYPICAL BREAKER CONTROL DIAGRAM WITH THE RELATED TRANSFORMER FEEDER RELAY. FOR SUBSTATION ONE LINE DIAGRAM AND THREE LINE DIAGRAM, REFER TO THE DRAWINGS E22 AND E28 RESPECTIVELY.
4. INSTALL NEW GFE 3-PHASE MICROPROCESSOR BASED RELAY, ALSTOM MICOM P124, COMPLETELY WIRED INTO THE EQUIPMENT.
5. INSTALL NEW ARC FLASH DETECTOR COMPLETELY WIRED INTO THE EQUIPMENT.

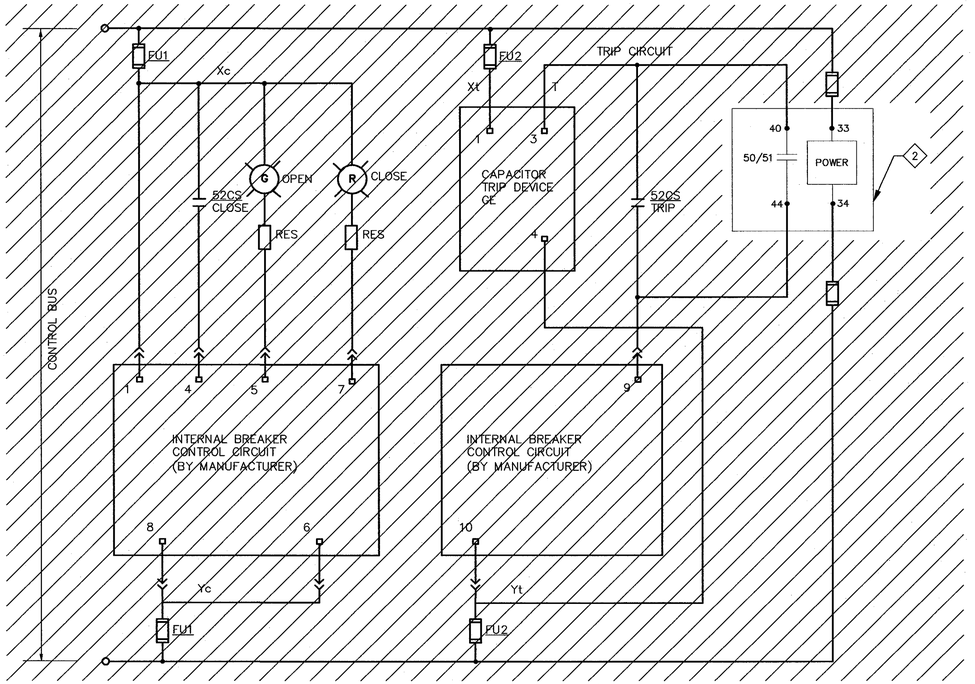

1 VCB492 BREAKER CONTROL DIAGRAM – DEMOLITION ◇1
SCALE: NTS

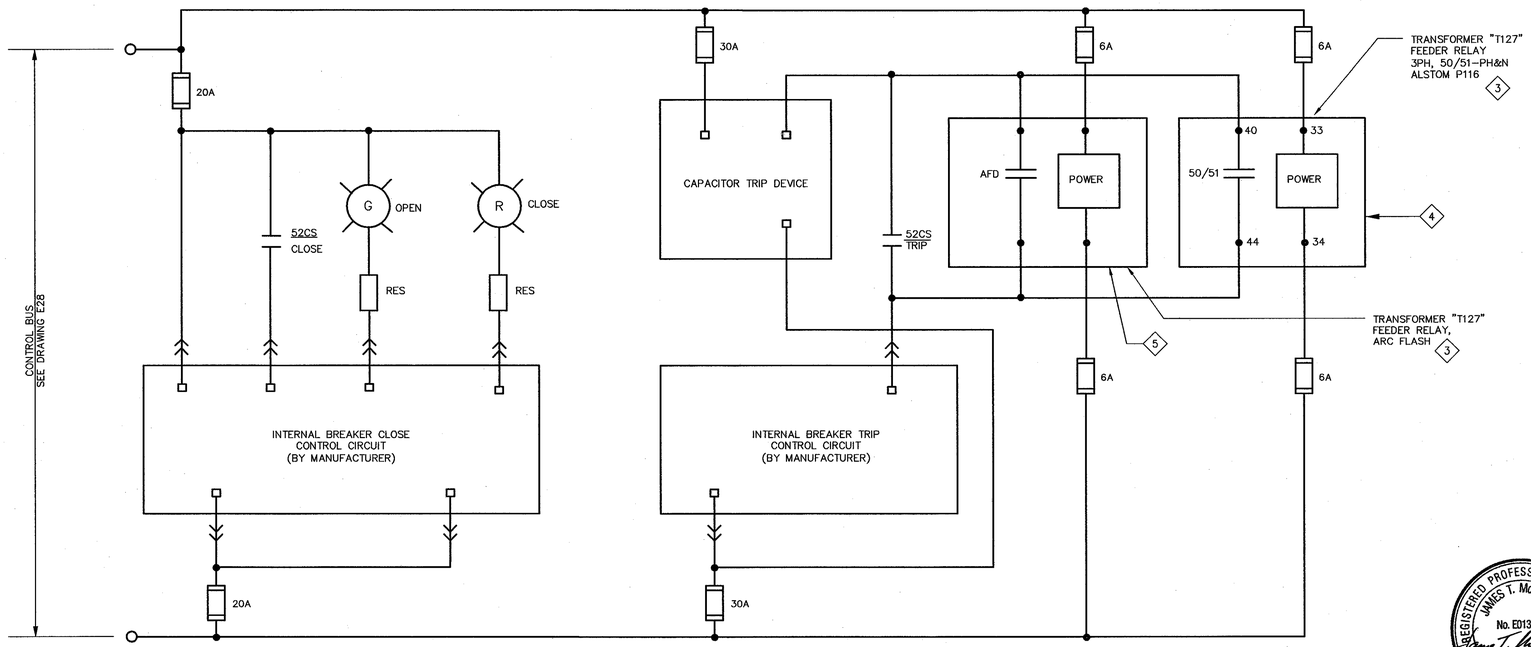

2 VCB492 BREAKER CONTROL DIAGRAM – NEW WORK
SCALE: NTS

Approved for Construction
Moffett Field Permit Board

Chief Building Official
Permit No. 11P038

ZONE	LETTER	DESCRIPTION	DRAWN	DATE	APPRVD
REVISIONS					

DRAWN N.NIZAMOVA		DATE 9/21/11
DESIGNED N.NIZAMOVA		DATE 9/21/11
CHECKED J.McCUSKER		DATE 9-27-11
PROJMGR F.JONES		DATE 9-23-11
REQUESTER D.TRAN		DATE 9/22/11
R&QA		DATE
SAFETY		DATE
SUPERVISOR S.FRANKEL	OCT 21 2011	DATE
		DATE

REGISTERED PROFESSIONAL ENGINEER JAMES T. McCUSKER No. ED13699 ELECTRICAL STATE OF CALIFORNIA

Ames Research Center
Moffett Field, California

RESTORATION OF ELECTRICAL DISTRIBUTION SYSTEM-HIGH VOLTAGE WP1
N223 OUTDOOR SUBSTATION
ELECTRICAL

VCB492 BREAKER CONTROL DIAGRAMS DEMOLITION & NEW WORK

SIZE	CAGE CODE	DWG NO.	REV
D	25307	A1---1001-E29	
SCALE		INDEX	SHEET 1 OF 1

FILE NAME: A1---1001-E029_1.DWG 9-21-11

60176753.0001

DWG: \\N21JFS2\Proj\YESDS\60176753 (K10018)_REDS - High Voltage\500 CAD\REDS_HV-WP1\N223-Substation\E\Sheet\A1---1001-E029_1_RHV.dwg Version: 17.1s (LMS Tech)
DATE: Sep 20, 2011 - 5:24:54 pm
User: polden

DWG NO.	SH.	REV
A1---1001-S2	1	

SHEET NOTES

1. FOR GENERAL STRUCTURAL NOTES, SYMBOLS AND ABREVIATIONS SEE DRAWING S1.

KEY NOTES

1. 1/2"ø THREADED ROD W/ HILTI RE-500 SD ADHESIVE ANCHOR, MIN. 6" EMBEDMENT (TOTAL OF 4 PER EQUIPMENT).
2. INCOMING SECTION, SEE ELECTRICAL DRAWING E25 FOR LOCATION.
3. VCB 492 SECTION, SEE ELECTRICAL DRAWING E25 FOR LOCATION.

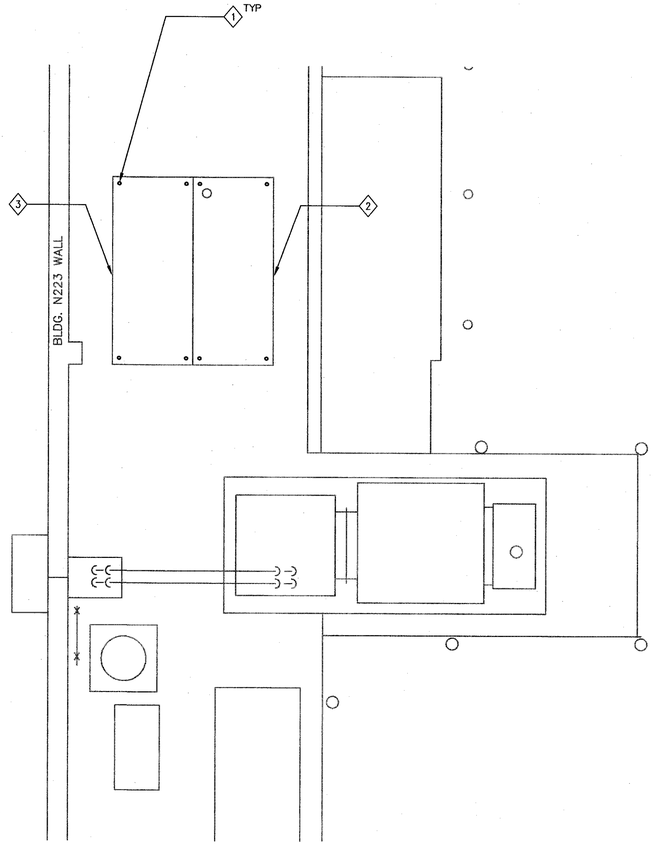

1 S2 S2 FOUNDATION PLAN
SCALE: 3/8"=1'-0"

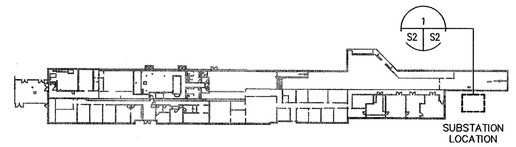

KEY PLAN

Approved for Construction
Moffett Field Permit Board

Chief Building Official
Permit No. 11P038

ZONE	LETTER	DESCRIPTION	DRAWN	DATE	APPRVD

REVISIONS

DRAWN F.BONALDI		DATE 9.22.11
DESIGNED A.FIOUZI		DATE 9.22.11
CHECKED N.SHAH	A. Fiouzi for Nutan Shah	DATE 9.22.11
PROJMGR F.JONES		DATE 9.23.11
REQUESTER D.TRAN		DATE 9/26/11
R&QA		DATE
SAFETY		DATE
SUPERVISOR S.FRANKEL		DATE OCT 21 2011

REGISTERED PROFESSIONAL ENGINEER AZITA FIROUZI No. 3535 STRUCTURAL STATE OF CALIFORNIA

REGISTERED PROFESSIONAL ENGINEER JAMES T. McCUSKER No. E013699 ELECTRICAL STATE OF CALIFORNIA

3/8"=1' 0 1 2 4 6 8

Ames Research Center
Moffett Field, California

RESTORATION OF ELECTRICAL DISTRIBUTION SYSTEM-HIGH VOLTAGE WP1
N223 OUTDOOR SUBSTATION
STRUCTURAL

FOUNDATION PLAN

SIZE	CAGE CODE	REV
D	25307	A 1---1001-S2
SCALE	INDEX	SHEET 1 OF 1

FILE NAME: A1---1001-S002_1_R7.DWG 9-21-11

60176753.0001

DWG: R:\REDS\60176753 (K10018)_REDS - High Voltage\500 CAD\REDS_HV-WP1\N223-Substation\S\Sheet\A1---1001-S002_1_RHV.dwg Version: 17.1s (LMS Tech) User: wbonaldi
DATE: Sep 22, 2011 - 8:22:52 am

DWG NO. A1---1001-E30 | SH. 1 | REV

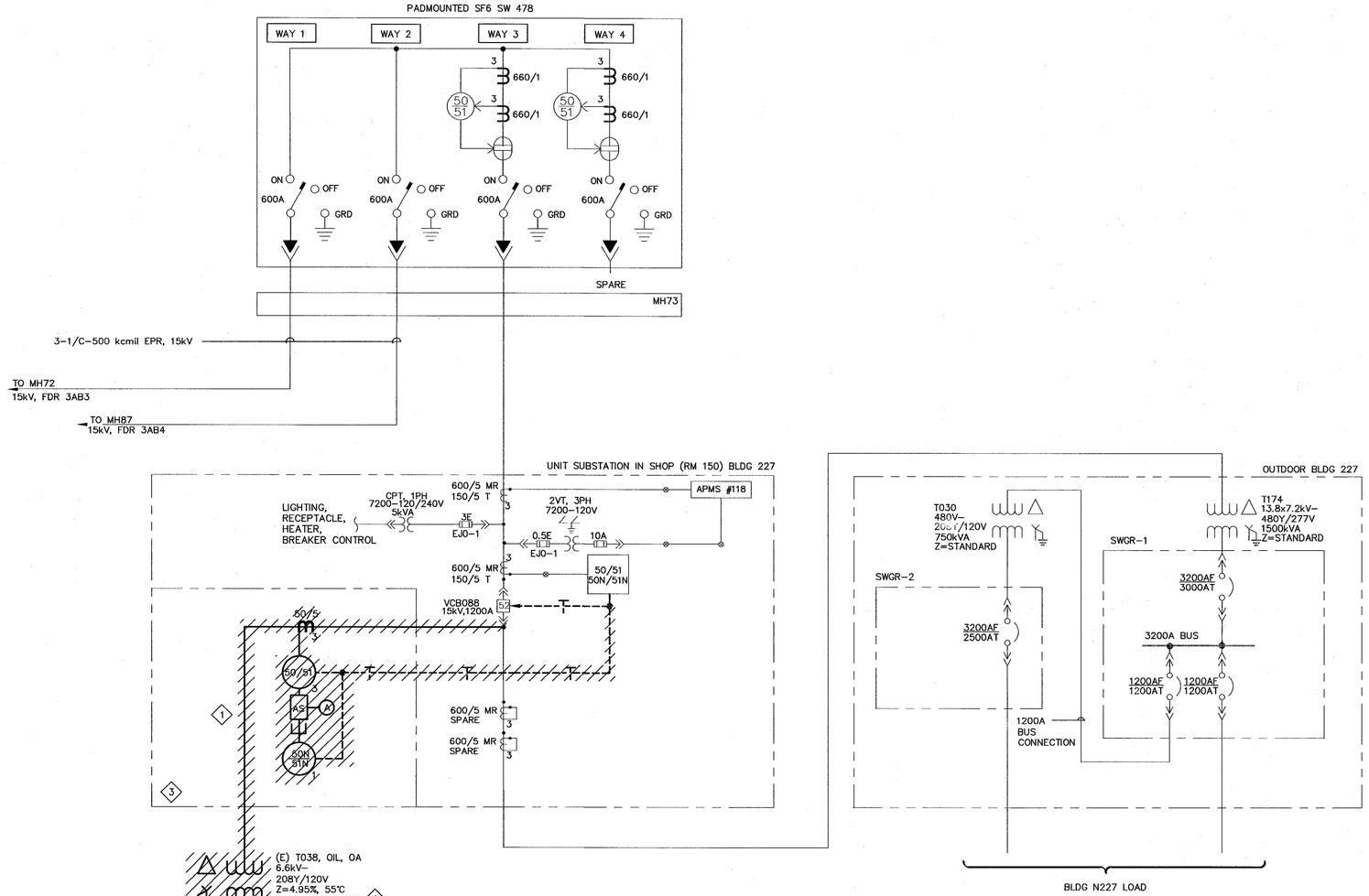

1 ONE LINE DIAGRAM-DEMOLITION
SCALE: NTS

SHEET NOTES

1. FOR GENERAL NOTES, ABBREVIATIONS AND SYMBOLS, SEE DRAWING G4.
2. NOT ALL CONDUITS AND CONDUCTORS ARE SHOWN ON THE DRAWING.
3. ONE LINE DIAGRAM IS BASED ON THE LATEST KNOWN EXISTING NASA DRAWING.
4. HATCHED LINES INDICATE EXISTING MATERIAL AND EQUIPMENT TO BE DEMOLISHED/REMOVED, U.O.N.
5. PRIOR TO SHUTDOWN AND DEMOLITION WORK, CONTRACTOR SHALL PERFORM PHASE SEQUENCE TEST ON EXISTING SYSTEM/EQUIPMENT IN THE PRESENCE OF COTR. ALL DISCONNECTED CABLES/EQUIPMENT SHALL BE PROPERLY IDENTIFIED, TAGGED/LABELED FOR RESTORATION IN NEW WORK.

KEY NOTES

1. DISCONNECT AND REMOVE EXISTING CABLE FROM VCB088 TO TRANSFORMER T038.
2. REMOVE EXISTING TRANSFORMER T038 AND ALL ASSOCIATED EQUIPMENT AND DEVICES. SEE DETAIL # 2 ON DRAWING E33 FOR LAYOUT.
3. DISCONNECT AND REMOVE (E) TRANSITION SECTION AND ALL ASSOCIATED EQUIPMENT AND DEVICES. SEE DETAIL # 1 ON DRAWING E33 FOR LAYOUT AND DRAWING E32 FOR SITE PLAN.

Approved for Construction
Moffett Field Permit Board

Chief Building Official
Permit No. 11P038

ZONE	LETTER	DESCRIPTION	DRAWN	DATE	APPRVD

REVISIONS

DRAWN	N.NIZAMOVA	9/21/11
DESIGNED	N.NIZAMOVA	9/21/11
CHECKED	J.McCUSKER	9-21-11
PROJMGR	F.JONES	9-23-11
REQUESTER	D.TRAN	9/26/11
R&QA		DATE
SAFETY		DATE
SUPERVISOR	S.FRANKEL	OCT 20 2011
		DATE

REGISTERED PROFESSIONAL ENGINEER
JAMES T. McCUSKER
No. E013699
ELECTRICAL
STATE OF CALIFORNIA

NASA
Ames Research Center
Moffett Field, California

RESTORATION OF ELECTRICAL DISTRIBUTION SYSTEM-HIGH VOLTAGE WP1
N227D OUTDOOR SUBSTATION
ELECTRICAL

ONE LINE DIAGRAM DEMOLITION

SIZE	CAGE CODE	DWG NO.	REV
D	25307	A1---1001-E30	1
SCALE AS NOTED		INDEX	SHEET 1 OF 1

FILE NAME: A1---1001-E030_1_R7B.DWG 9-21-11

60176753.0001

DWG: \\N213FS2\Proj\REDS\60176753 (K10018)_REDS - High Voltage\500 CAD\REDS_HV-WP1\N227D-Substation\E\Sheet\A1---1001-E030_1_RHV.DWG Version: 17.1s (MS Tech) User: polden
DATE: Sep 20, 2011 - 5:24:44 pm

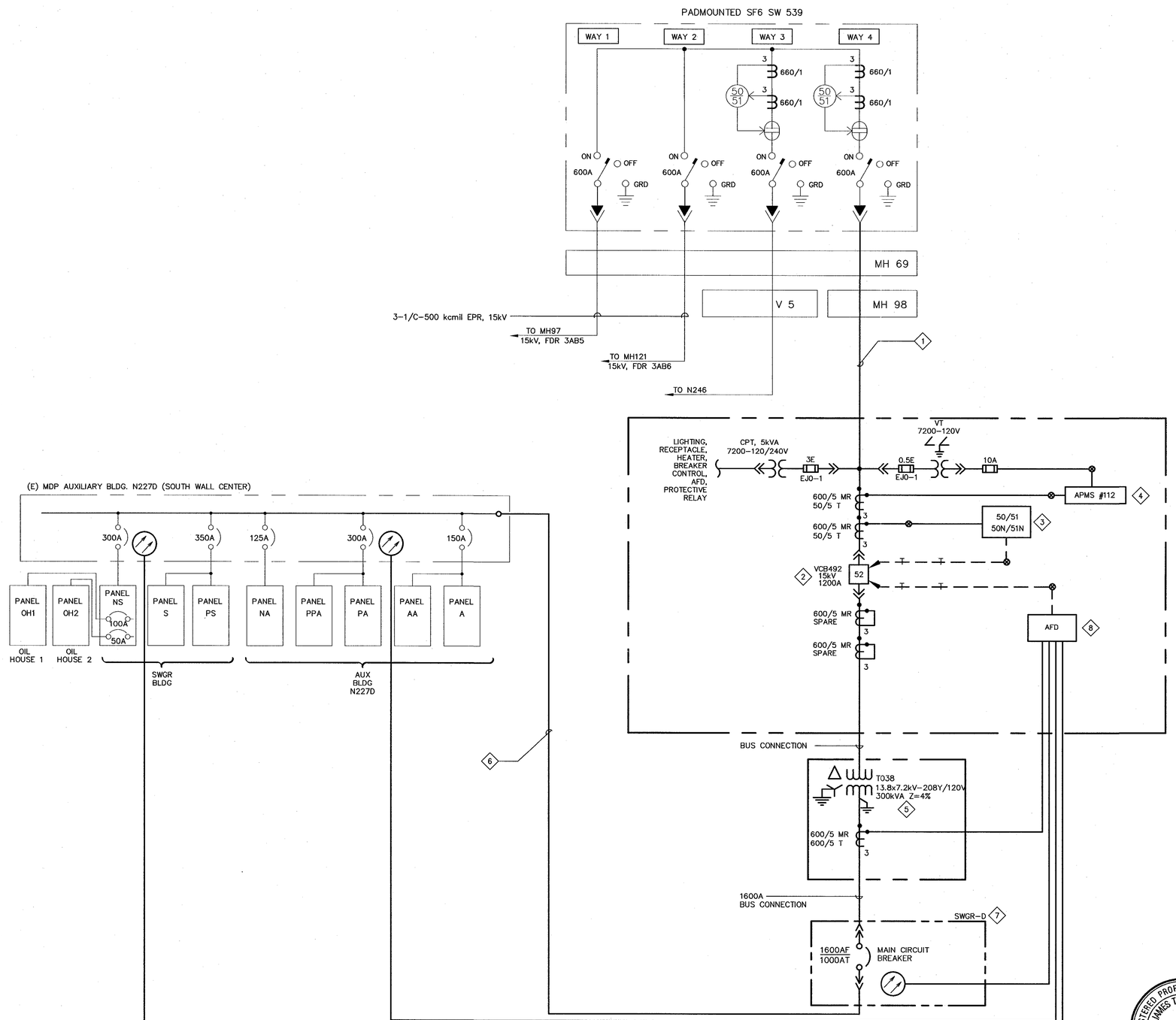

1 ONE LINE DIAGRAM-NEW WORK
SCALE: N.T.S

SHEET NOTES

1. FOR GENERAL NOTES, ABBREVIATIONS AND SYMBOLS, SEE DRAWING G4.
2. SINGLE LINE DIAGRAM IS BASED ON THE LATEST KNOWN EXISTING NASA DRAWING.
3. LIGHT LINES DENOTE EXISTING MATERIAL/ EQUIPMENT TO REMAIN.
4. ALL INDOOR EQUIPMENT TO BE RATED FOR USE IN NEMA 12 ENVIRONMENT, MINIMUM.
5. NOT ALL CONDUITS AND CONDUCTORS ARE SHOWN ON DWG.
6. DARK OR HEAVY LINES INDICATE NEW MATERIAL/EQUIPMENT TO BE PROVIDED. U.O.N.
7. THE DIAGRAM IS PROVIDED FOR GUIDANCE ONLY. THE CONTRACTOR SHALL FIELD VERIFY ALL EXISTING EQUIPMENT INCLUDING TERMINAL BLOCKS, TERMINAL IDENTIFICATION NUMBER, CONNECTIONS ETC. AND REVISE DRAWINGS AS NEEDED TO MATCH EXISTING AND NEW EQUIPMENT TO PROVIDE A COMPLETE FUNCTIONAL SYSTEM.
8. ALL CT WIRES SHALL BE #10 AWG MINIMUM, TYPE SIS. ALL VOLTAGE, CPT SECONDARY AND BREAKER TRIP WIRES SHALL BE #12 AWG MINIMUM, TYPE SIS. U.O.N.
9. CONTRACTOR SHALL FIELD VERIFY ALL EQUIPMENT RATING PRIOR TO ORDERING.
10. CPT AND VT'S SHALL BE DRAWOUT TYPE.
11. SEE DRAWING E35 FOR THREE LINE DIAGRAM AND E36 FOR BREAKER CONTROL DIAGRAM.
12. SEE DRAWING E63 FOR NAMEPLATE SCHEDULE.

KEY NOTES

1. PROVIDE NEW 15kV, 3-1/C-350KCMIL, 133% INSULATION, EPR CABLE AND 1/C #4/0 GND FROM SW539 TO VCB689 VIA MH E69 & E98.
2. PROVIDE NEW 15kV, 1200A SWITCHGEAR WITH VACUUM CIRCUIT BREAKER VCB689, CPT, VT AND ALL ACCESSORIES PER SPECIFICATION SECTION 26 13 00.00 20.
3. INSTALL NEW GFE 3-PHASE MICROPROCESSOR BASED RELAY ALSTOM MICOM P116 COMPLETELY WIRED ON THE NEW SWITCHGEAR. INSTALLATION SHALL BE IN ACCORDANCE WITH DRAWINGS E64 & E68.
4. INSTALL NEW GFE 3-PHASE DIGITAL POWER METER, PML ION 7330 COMPLETELY WIRED ON THE NEW SWITCHGEAR, MOUNTED IN ACCORDANCE WITH DRAWING E64 & 68.
5. PROVIDE NEW OUTDOOR LIQUID-FILLED TRANSFORMER T038 WITH DUAL RATED PRIMARY WINDING. LIQUID-FILLED TRANSFORMER SHALL BE LESS FLAMMABLE PER NEC, VEGETABLE-BASED OIL TYPE WITH ALL ACCESSORIES PER SPECIFICATION SECTIONS 26 12 00.00 40. & 26 11 16.
6. PROVIDE AND INSTALL 3 X (4-1/C-500KCMIL & 1/C #2/0 GROUND) IN EXISTING 3-3" CONDUIT.
7. PROVIDE NEW OUTDOOR 208V SWITCHGEAR (SWGR-D) WITH 1600A DRAW OUT TYPE CIRCUIT BREAKER WITH GFP.
8. INSTALL ARC FLASH DETECTOR COMPLETELY WIRED INTO THE NEW SWITCHGEAR. INSTALLATION SHALL BE IN ACCORDANCE WITH MANUFACTURER'S RECOMENDATIONS.

Approved for Construction
Moffett Field Permit Board
Chief Building Official
Permit No. 11P038

ZONE	LETTER	DESCRIPTION	DRAWN	DATE	APPRVD

REVISIONS

DRAWN N.NIZAMOVA		DATE 9/8/11
DESIGNED N.NIZAMOVA		DATE 9/21/11
CHECKED J.McCUSKER		DATE 9-21-11
PROJMGR F.JONES		DATE 9.23.11
REQUESTER D.TRAN		DATE 9.26.11
R&QA		DATE
SAFETY		DATE
SUPERVISOR S.FRANKEL	OCT 21 2011	DATE
		DATE

REGISTERED PROFESSIONAL ENGINEER JAMES T. McCUSKER No. EE13699 ELECTRICAL STATE OF CALIFORNIA

Ames Research Center
Moffett Field, California

RESTORATION OF ELECTRICAL DISTRIBUTION SYSTEM-HIGH VOLTAGE WP1
N227D OUTDOOR SUBSTATION
ELECTRICAL

ONE LINE DIAGRAM
NEW WORK

SIZE	CAGE CODE	REV
D	25307	A-1---1001-E31
SCALE	AS NOTED	INDEX SHEET 1 OF 1

FILE NAME: A1---1001-E031_1_R7B.DWG 9-21-11

601767530001

DWG: \\N21FS2\Proj\REDS\601767\S (K10018)_REDS - High Voltage\500 CAD\REDS_HV-WP1\N227D-Substation\E\Sheet\A1---1001-E031_1_R#V.DWG Version: 17.1s (LMS Tech) User: pdoen
DATE: Sep 20, 2011 - 5:24:49 pm

DWG NO.	SH.	REV
A1---1001-E32	1	

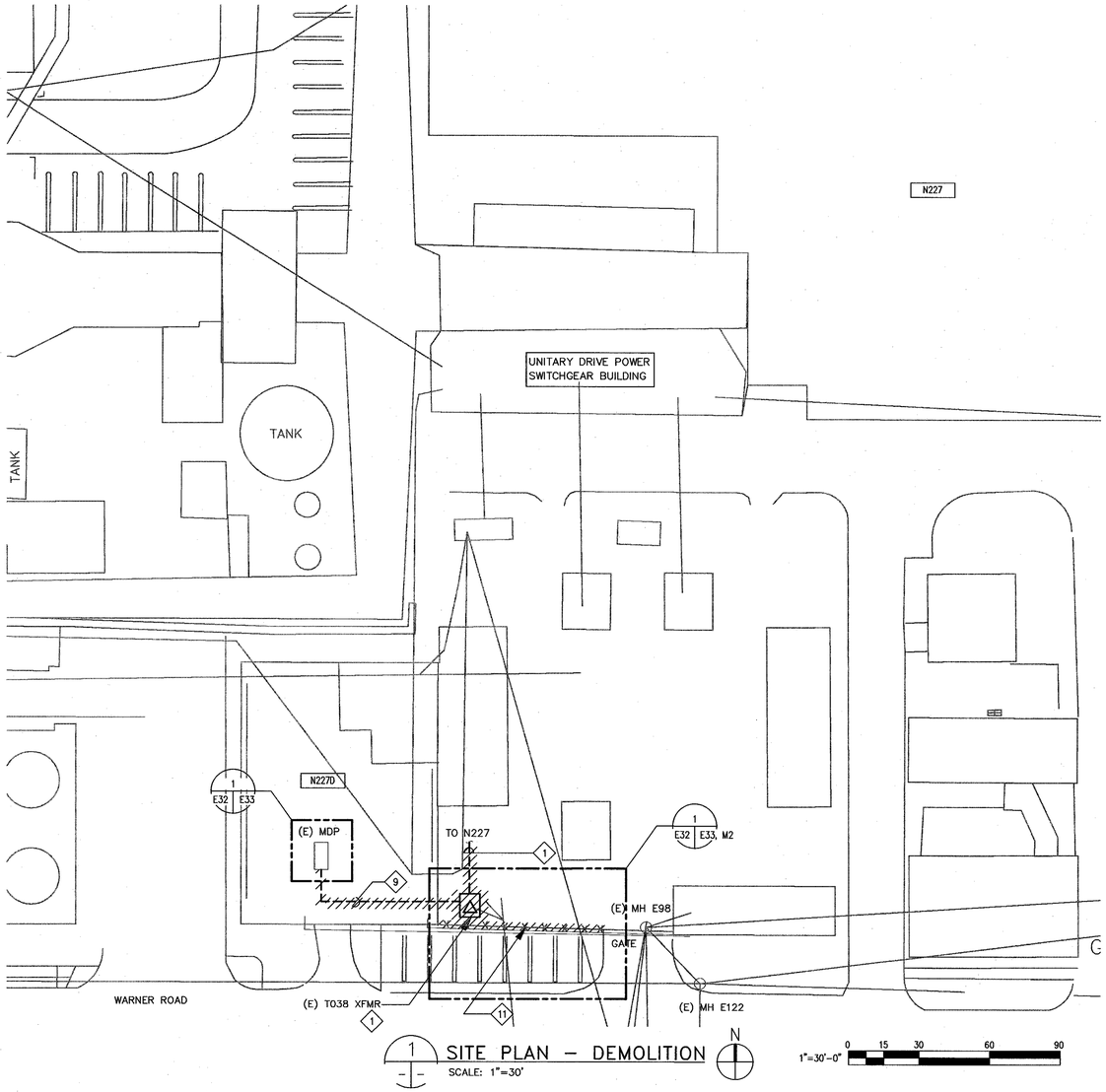

1 SITE PLAN – DEMOLITION
SCALE: 1"=30'

1"=30'-0" 0 15 30 60 90

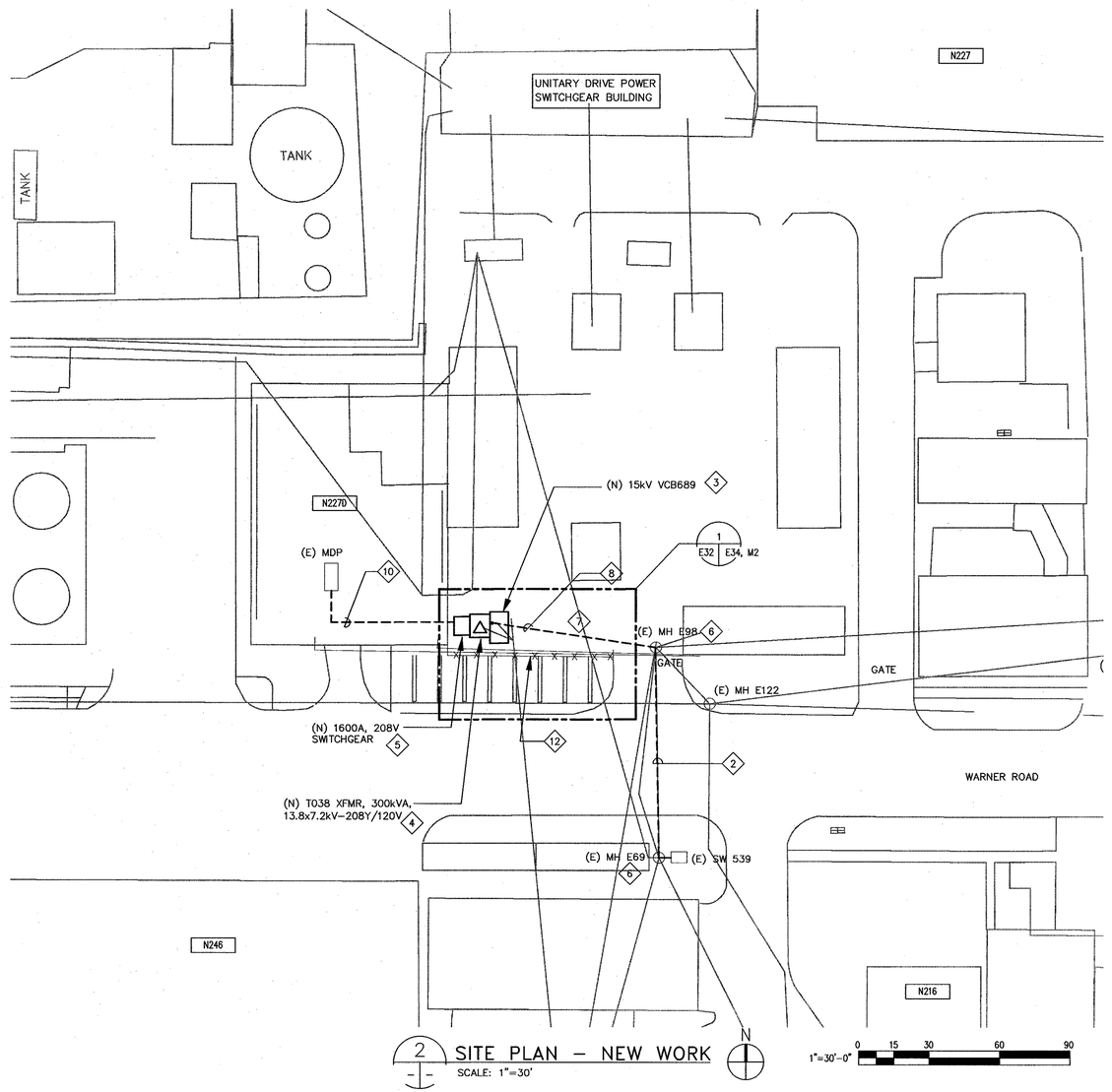

2 SITE PLAN – NEW WORK
SCALE: 1"=30'

1"=30'-0" 0 15 30 60 90

SHEET NOTES

1. FOR GENERAL NOTES, SYMBOLS AND ABREVIATIONS, SEE DRAWING G4.
2. NOT ALL CONDUITS AND CONDUCTORS ARE SHOWN ON DWG.
3. HATCHED LINES INDICATE EXISTING MATERIAL/EQUIPMENT TO BE DEMOLISHED AND REMOVED, U.O.N.
4. CONTRACTOR SHALL FIELD VERIFY ALL MEASUREMENTS AT THE SITE AND SHALL BE RESPONSIBLE FOR THEIR ACCURACY PRIOR TO STARTING ANY WORK OR ORDERING ANY MATERIAL.

KEY NOTES

1. REMOVE (E) T038 AND CABLES BETWEEN VCB 088 IN BUILDING N277 AND T038. SEE ONE LINE DIAGRAM ON DRAWING E30 FOR DETAILS.
2. PROVIDE NEW 15kV, 3–1/C–350KCMIL, 133% INSULATION, EPR CABLE AND 1/C #4/0 GND FROM SW539 TO VCB689 VIA MH E69 & E98 INTO (E) & (N) 4" CONDUIT.
3. PROVIDE NEW 15kV, 1200A SWITCHGEAR WITH VACUUM CIRCUIT BREAKER VCB689, CPT, VT AND ALL ACCESSORIES PER SPECIFICATION SECTION 26 13 00.00 20.
4. PROVIDE NEW OUTDOOR LIQUID–FILLED 13.8x7.2–208Y/120V, 300kVA TRANSFORMER T038 WITH DUAL RATED PRIMARY WINDING. LIQUID–FILLED TRANSFORMER SHALL BE LESS FLAMMABLE VEGETABLE–BASED OIL TYPE WITH ALL ACCESSORIES PER SPECIFICATION SECTIONS 26 11 16 & 26 12 00.00 40.
5. PROVIDE NEW OUTDOOR 208V SWITCHGEAR (SWGR–D) WITH 1600A DRAW OUT TYPE CIRCUIT BREAKER WITH GFP.
6. SEE DRAWING E37 FOR MANHOLE E69 DETAILS.
7. CONTRACTOR SHALL TAKE EXTREME CARE AND NECESSARY PRECAUTION WHILE WORKING ON THIS AREA. EXCAVATION WORK SHALL BE DONE BY HAND. DO NOT USE MACHINERY FOR EXCAVATION. HIGH VOLTAGE DUCTS LOCATED APPROXIMATELLY 4' OR 5' BELOW THE GRADE.
8. INSTALL (N) 2–4" CONCRETE ENCLOSED DUCTS BETWEEN MH E98 AND VCB689.
9. REMOVE CONNECTION (CABLE) BETWEEN TRANSFORMER T038 AND LOW VOLTAGE MAIN DISTRIBUTION PANEL 'MDP' IN BUILDING N227D. SEE DRAWING E30 FOR ONE LINE DIAGRAM.
10. PROVIDE AND INSTALL 3 X (4–1/C–500KCMIL & 1/C #2/0 GROUND) IN EXISTING 3–3" CONDUIT. SEE DRAWING E31 FOR ONE LINE DIAGRAM.
11. (E) FENCE SHALL BE RELOCATED AS SHOWN. SEE DRAWINGS E33 & S3 FOR DETAILS.
12. NEW LOCATION OF (R) FENCE. SEE DRAWING E34, S3 & S4 FOR DETAILS.

REGISTERED PROFESSIONAL ENGINEER
JAMES T. McCUSKER
No. ED13699
ELECTRICAL
STATE OF CALIFORNIA

Approved for Construction
Moffett Field Permit Board

Chief Building Official
Permit No. 11P038

ZONE	LETTER	DESCRIPTION	DRAWN	DATE	APPRVD

REVISIONS

DRAWN N.NIZAMOVA		DATE 9/21/11
DESIGNED N.NIZAMOVA		DATE 9/21/11
CHECKED J.McCUSKER		DATE 9-22-11
PROJMGR F.JONES		DATE 9.22.11
REQUESTER D.TRAN		DATE 9/22/11
R&QA		DATE
SAFETY		DATE
SUPERVISOR S.FRANKEL	OCT 21 2011	DATE
		DATE

Ames Research Center
Moffett Field, California

RESTORATION OF ELECTRICAL DISTRIBUTION SYSTEM–HIGH VOLTAGE WP1
N227D OUTDOOR SUBSTATION
ELECTRICAL

SITE PLANS DEMOLITION & NEW WORK

SIZE	CAGE CODE	REV
D	25307	A
SCALE	AS NOTED	INDEX SHEET 1 OF 1

FILE NAME: A1---1001-E032_1_R7B.DWG 9-21-11

60176753.0001

DWG: \\NZ13FS2\Proj\RESS\60176753 (K10016)_RESS - High Voltage\300 CAD\RESS_HV-WP1\N227D-Substation\E\Sheet\A1---1001-E032_1_R4V.DWG Version: 17.1s (LMS Tech) User: paiden
DATE: Sep 21, 2011 - 1:55:08 pm

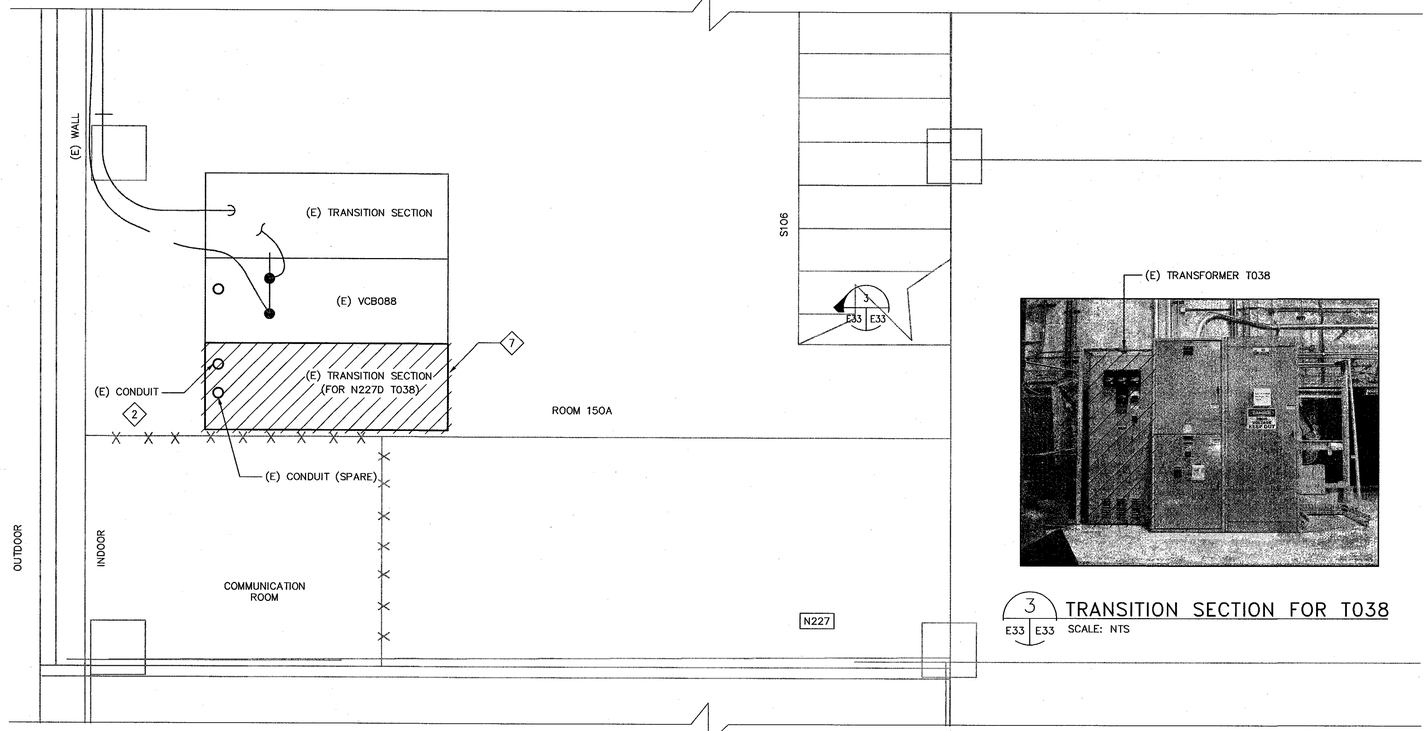

1 E32 E33 N227 EQUIPMENT PLAN–DEMOLITION
SCALE: 1"=30'

3 E33 E33 TRANSITION SECTION FOR T038
SCALE: NTS

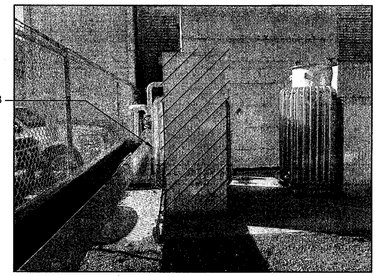

4 E33 E33 T038
SCALE: NTS

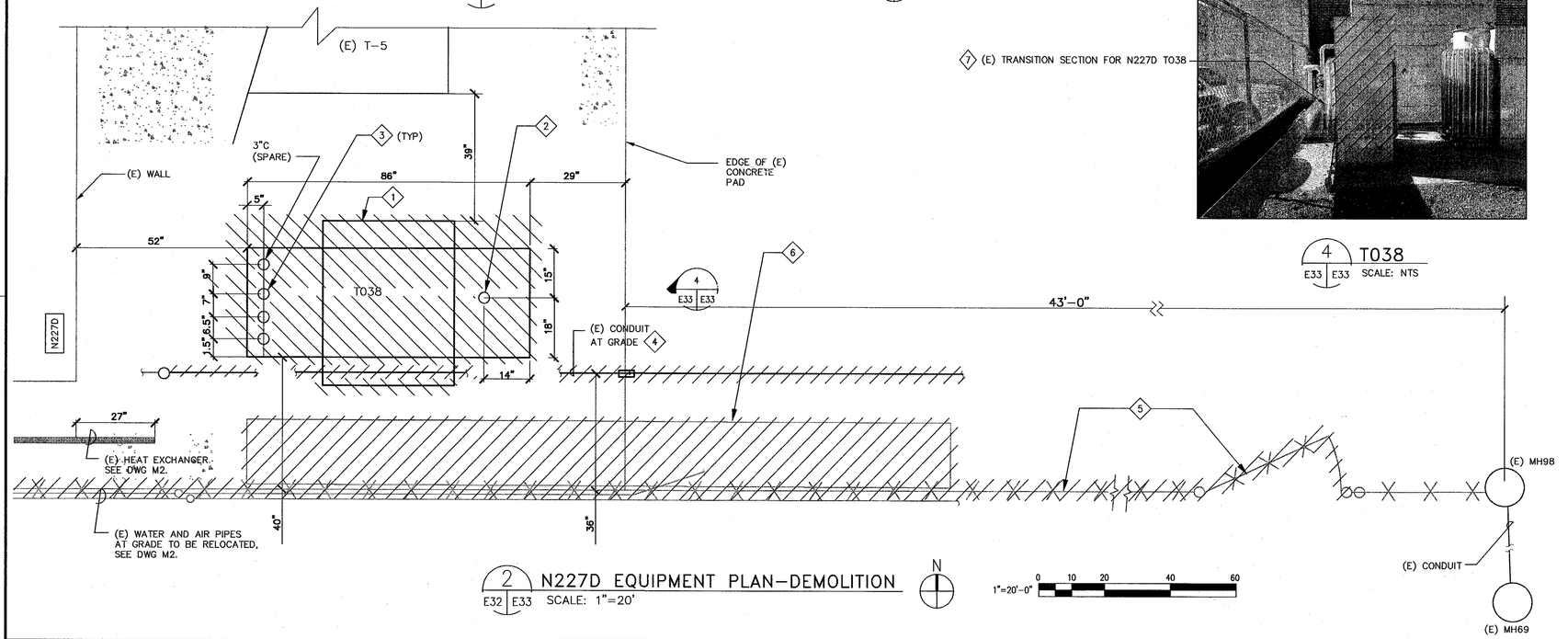

2 E32 E33 N227D EQUIPMENT PLAN–DEMOLITION
SCALE: 1"=20'

SHEET NOTES

1. FOR GENERAL NOTES, SYMBOLS AND ABREVIATIONS, SEE DRAWING G4.
2. HATCHED LINES INDICATE EXISTING MATERIAL/EQUIPMENT TO BE DEMOLISHED.
3. CONTRACTOR SHALL CUT EXISTING CONCRETE AND EXCAVATE TO RELOCATE/EXTEND (E) DUCTS TO COMPLETE CONNECTIONS TO NEW AND EXISTING EQUIPMENT.
4. PRIOR TO SHUTDOWN AND DEMOLITION WORK, CONTRACTOR SHALL PERFORM PHASE SEQUENCE TEST ON EXISTING SYSTEM/EQUIPMENT IN THE PRESENCE OF COTR.
5. EXISTING GROUNDING TO REMAIN FOR RECONNECTION OF NEW EQUIPMENT IN NEW WORK.

KEY NOTES

1. REMOVE (E) TRANSFORMER T038.
2. DISCONNECT AND REMOVE CABLE BETWEEN (E) VCB 088 IN BUILDING N277 AND T038. CUT AND CAP (E) CONDUIT. SEE DWGS E30 FOR ONE LINE DIAGRAM–DEMOLITION WORK.
3. EXISTING CONDUIT TO REMAIN. DISCONNECT AND REMOVE EXISTING CABLE FROM 'MDP' AUXILIARY BUILDING N227D TO T038.
4. CUT AND REMOVE (E) CONDUIT FROM SITE IN ORDER TO ACCOMMODATE NEW EQUIPMENT LAYOUT. SEE DRAWING E34 FOR NEW LOCATION OF EXTENDED CONDUIT.
5. (E) FENCE AND MANDOOR SHALL BE REMOVED. SEE DRAWING E34 FOR NEW FENCE, MANDOOR AND GATE LOCATION.
6. (E) METAL STRUCTURE TO BE DEMOLISHED.
7. DISCONNECT AND REMOVE (E) TRANSITION SECTION FOR TRANSFORMER T038 FROM BUILDING N227.

REGISTERED PROFESSIONAL ENGINEER JAMES T. McCUSKER No. E013699 ELECTRICAL STATE OF CALIFORNIA

Approved for Construction
Moffett Field Permit Board
Chief Building Official
Permit No. 11P038

ZONE	LETTER	DESCRIPTION	DRAWN	DATE	APPRVD

REVISIONS

DRAWN N.NIZAMOVA		DATE 9/21/11
DESIGNED N.NIZAMOVA		DATE 9/21/11
CHECKED J.McCUSKER		DATE 9-21-11
PROJMGR F.JONES		DATE 9.23.11
REQUESTER D.TRAN		DATE 9/22/11
R&QA		DATE
SAFETY		DATE
SUPERVISOR S.FRANKEL	OCT 24 2011	DATE

Ames Research Center
Moffett Field, California

RESTORATION OF ELECTRICAL DISTRIBUTION SYSTEM–HIGH VOLTAGE WP1
N227D OUTDOOR SUBSTATION
ELECTRICAL

N227 & N227D EQUIPMENT PLANS DEMOLITION

SIZE	CAGE CODE	REV
D	25307	A
SCALE	AS NOTED	INDEX / SHEET 1 OF 1

FILE NAME: A1---1001-E033_1_R7B.DWG 9-21-11

60176753.0001

DWG: \\W2137SO\Proj\KEDS\60176753 (K10018)_KEDS - High Voltage\500 CAD\KEDS_HV-WP1\N227D-Substation\E\Sheet\A1---1001-E033_1_RHV.DWG Version: 17.1s (LMS Tech) User: palden
DATE: Sep 20, 2011 - 2:26:05 pm

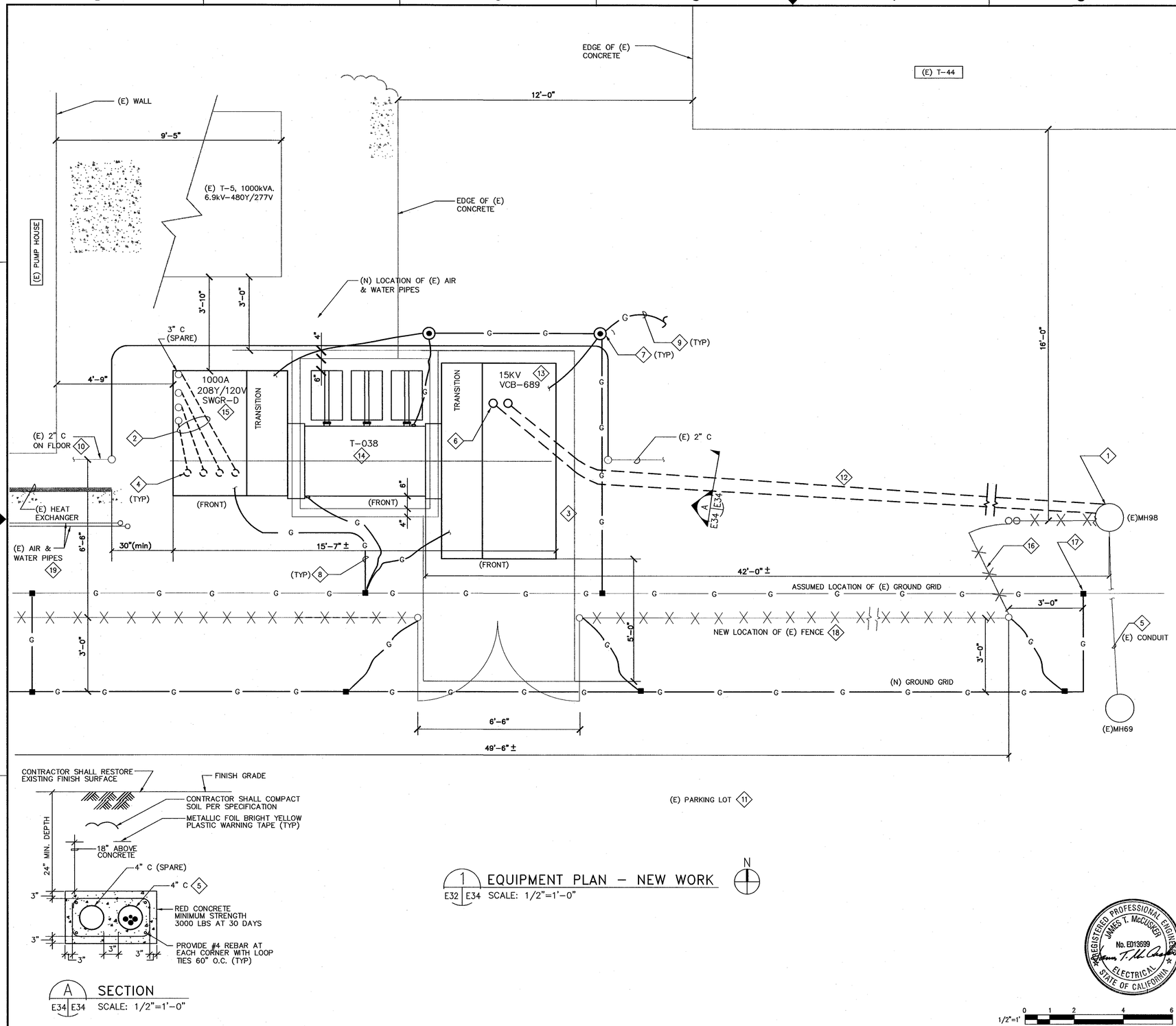

A SECTION
E34 | E34 SCALE: 1/2"=1'-0"

1 EQUIPMENT PLAN – NEW WORK
E32 | E34 SCALE: 1/2"=1'-0"

1/2"=1' 0 1 2 4 6

SHEET NOTES

1. FOR GENERAL NOTES, SYMBOLS AND ABREVIATIONS, SEE DRAWING G4.
2. HEAVY LINES INDICATE NEW MATERIAL/EQUIPMENT TO BE PROVIDED. LIGHT LINES DENOTE EXISTING CONDITIONS, MATERIALS AND EQUIPMENT TO REMAIN.
3. CONTRACTOR SHALL FIELD VERIFY ALL MEASUREMENTS AT THE SITE AND SHALL BE RESPONSIBLE FOR THEIR ACCURACY PRIOR TO STARTING ANY WORK OR ORDERING ANY MATERIAL.
4. ALL OUTDOOR EQUIPMENT SHALL BE NEMA 3R.
5. DIMENSION SHOWN ARE FOR GUIDANCE ONLY. CONTRACTOR SHALL VERIFY CONDUIT STUB-UP & EQUIPMENT DIMENSIONS BEFORE INSTALLATION.
6. ELECTRICAL EQUIPMENT AND FEEDERS SHALL BE SUPPORTED AND ANCHORED IN ACCORDANCE WITH CALIFORNIA BUILDING CODE SEISMIC REQUIREMENTS.

KEY NOTES

1. CORE DRILL 2-4" OPENING AND INSTALL 2-4" CONDUIT IN CONCRETE ENCASED FROM MH98 AS SHOWN ON LAYOUT.
2. SAW CUT (E) HOUSEKEEPING PAD. INTERSEPT AND EXTEND (E) CONDUITS TO ACCOMODATE NEW EQUIPMENT LAYOUT. RESTORE CONCRETE PAD.
3. SEE STRUCTURAL DRAWING S3 FOR CONCRETE PAD DETAILS.
4. INSTALL 3 X (4-1/C-500 KCMIL AND 1/C#2/0 AWG GROUND) BETWEEN (N) SWGR-D AND (E) MDP PANEL INSIDE THE BUILDING N227D. ROUTE IN EXISTING AND NEW 3 X 3" CONDUIT.
5. PULL NEW 3-1/C-350 kCMIL 15kV CABLE AND 1/C #4/0 GND FROM SW 539 TO NEW VCB689 VIA MH69 AND MH98 IN EXISTING CONDUIT.
6. CONNECT NEW 15KV, 3-1/C-350 kCMIL CABLE AND 1/C #4/0 GND TO VCB689.
7. PROVIDE 3/4" DIA. 10' LONG GROUND RODS. CONNECT THESE GROUND RODS WITH #4/0 BARE COPPER TO EACH OTHER 18" BELOW GRADE. SEE DRAWING E66 FOR DETAILS.
8. CONNECT NEW EQUIPMENT TO EXISTING GROUNDING SYSTEM WITH #4/0 AWG BARE COPPER CONDUCTOR.
9. CONNECT #4/0 BARE COPPER GROUND CONDUCTOR TO EXISTING GROUND GRID.
10. INTERCEPT (E) 2" CONTROL CONDUIT, EXTEND CONDUIT AND WIRES TO NEW LOCATION AS SHOWN ON THE DRAWING IN ORDER TO ACCOMMODATE NEW EQUIPMENT LAYOUT.
11. PROVIDE WHEEL STOPS IN (E) PARKING LOT TO MATCH (E) ONE.
12. CONTRACTOR SHALL TAKE EXTREME CARE AND NECESSARY PRECAUTION WHILE WORKING ON THIS AREA. EXCAVATION WORK SHALL BE DONE BY HAND. DO NOT USE MACHINERY FOR EXCAVATION. HIGH VOLTAGE DUCTS LOCATED APPROXIMATELLY 4' OR 5' BELOW THE GRADE.
13. PROVIDE NEW 15kV, 1200A SWITCHGEAR WITH VACUUM CIRCUIT BREAKER VCB689, CPT, VT AND ALL ACCESSORIES PER SPECIFICATION SECTION 26 13 00.00 20.
14. PROVIDE NEW OUTDOOR LIQUID-FILLED TRANSFORMER T038 WITH DUAL RATED PRIMARY WINDING. LIQUID-FILLED TRANSFORMER SHALL BE LESS FLAMMABLE PER NEC, VEGETABLE-BASED OIL TYPE WITH ALL ACCESSORIES PER SPECIFICATION SECTIONS 26 12 00.00 40 & 26 11 16.
15. PROVIDE NEW OUTDOOR 208V SWITCHGEAR (SWGR-D) WITH 1600A DRAW OUT TYPE CIRCUIT BREAKER WITH GFP.
16. NEW LOCATION OF (E) MANDOOR.
17. LOCATE (E) GROUND GRID (ASSUMED AT 36" OUTSIDE (E) FENCE). INSTALL (N) #4/0 AWG BCW 36" OUTSIDE (N) FENCE, CONNECT TO (E) GROUND GRID W/ EXOTHERMAL WELD. SEE DRAWING E66 FOR DETAILS.
18. FENCE SHALL BE GROUNDED AT EACH GATE POST AND CORNERPOST AND AT INTERVALS NOT EXCEEDING 10 FEET. BOND EACH GATE SECTION TO THE FENCE POST THROUGH A 1/8 BY ONE INCH FLEXIBLE BRAIDED COPPER STRAP AND CLAMPS.
19. SEE MECHANICAL DRAWING M2 FOR PIPES RELOCATION.

Approved for Construction
Moffett Field Permit Board
Chief Building Official
Permit No. 11P038

ZONE	LETTER	DESCRIPTION	DRAWN	DATE	APPRVD

REVISIONS

DRAWN N.NIZAMOVA	DATE	9/21/11
DESIGNED N.NIZAMOVA	DATE	9/21/11
CHECKED J.McCUSKER	DATE	9-21-11
PROJMGR F.JONES	DATE	9.23.11
REQUESTER D.TRAN	DATE	9/23/11
R&QA	DATE	
SAFETY	DATE	
SUPERVISOR S.FRANKEL	DATE	OCT 21 2011
	DATE	

REGISTERED PROFESSIONAL ENGINEER JAMES T. McCUSKER No. E013699 ELECTRICAL STATE OF CALIFORNIA

Ames Research Center
Moffett Field, California

RESTORATION OF ELECTRICAL DISTRIBUTION SYSTEM-HIGH VOLTAGE WP1
N227D OUTDOOR SUBSTATION
ELECTRICAL

EQUIPMENT PLAN NEW WORK

SIZE	CAGE CODE	REV
D	25307	A
SCALE AS NOTED	INDEX	SHEET 1 OF 1

FILE NAME: A1---1001-E034_1_R7B.DWG 9-21-11

60176753.0001

DWG: \\N21FS2\Proj\REDS\60176753 (K10018)_REDS - High Voltage\500 CAD\REDS_HV-WP1\N227D-Substation\E\Sheet\A1---1001-E034_1_R7H.DWG Version: 17.1s (LMS Tech)
DATE: Sep 20, 2011 - 5:25:10 pm User: palden

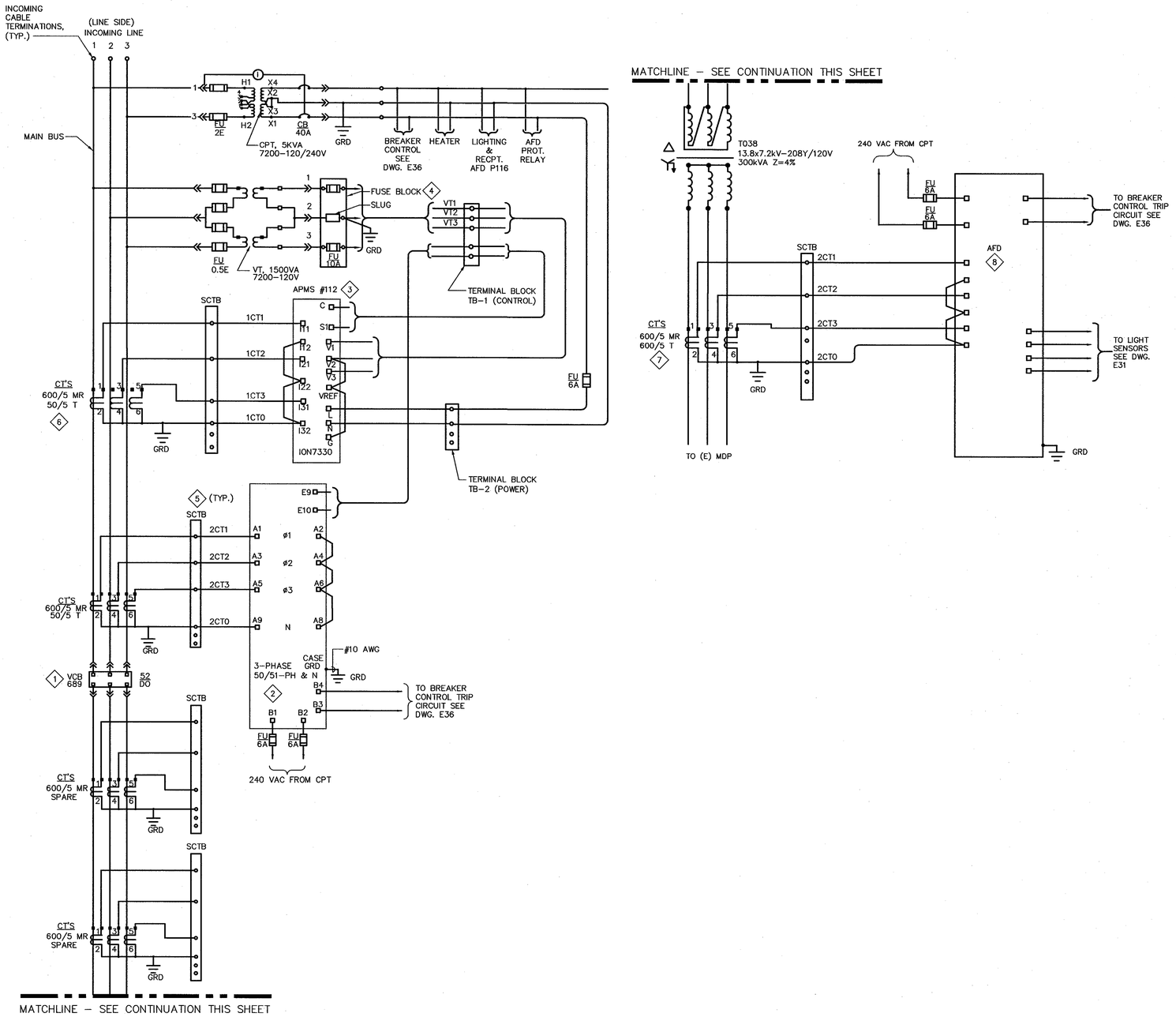

2 THREE LINE DIAGRAM – NEW WORK
SCALE: NTS

SHEET NOTES

1. FOR GENERAL NOTES, SYMBOLS AND ABREVIATIONS, SEE DRAWING G4.
2. HATCHED LINES INDICATE EXISTING MATERIAL/EQUIPMENT TO BE DEMOLISHED AND REMOVED. U.O.N
3. HEAVY LINES INDICATE NEW MATERIAL/EQUIPMENT TO BE PROVIDED. U.O.N.
4. THE DIAGRAMS ARE PROVIDED FOR GUIDANCE ONLY. THE CONTRACTOR SHALL FIELD VERIFY ALL EQUIPMENT INCLUDING TERMINAL BLOCKS, TERMINAL IDENTIFICATION NUMBER, CONNECTIONS ETC.
5. BASED ON EQUIPMENT INSTALLED TO PROVIDE A FUNCTIONAL SYSTEM.
6. ALL CT WIRES SHALL BE #10 AWG MINIMUM, TYPE SIS. ALL VOLTAGE AND BREAKER TRIP WIRES SHALL BE #12 AWG MINIMUM, TYPE SIS. U.O.N.

KEY NOTES

1. PROVIDE NEW 15kV SWITCHGEAR WITH 15kV VACUUM CIRCUIT BREAKER AND ACCESSORIES PER SPECIFICATION.
2. INSTALL NEW GFE ALSTOM RELAY COMPLETELY WIRED INTO THE EQUIPMENT.
3. INSTALL NEW GFE DIGITAL POWER METER COMPLETELY WIRED INTO THE EQUIPMENT.
4. PROVIDE FUSE BLOCK, FLEXCORE KLK–3 OR APPROVED EQUAL.
5. PROVIDE SIX (6) CIRCUIT SHORTING TERMINAL BLOCK (SCTB), FLEXCORE 1KU6SC OR APPROVED EQUAL.
6. PROVIDE (2) SETS OF 3 WINDOW–TYPE MULTI–RATIO CT'S ON THE LINE SIDE OF THE BREAKER. PROVIDE (2) ADDITIONAL SPARE SETS OF CT'S ON THE LOAD SIDE OF THE BREAKER. ALL CT'S SHALL BE C200 ACCURACY.
7. PROVIDE (1) SET OF 3 WINDOW–TYPE MULTI–RATIO CT'S ON THE LOAD SIDE OF THE TRANSFORMER. CT'S SHALL BE C200 ACCURACY.
8. INSTALL ARC FLASH DETECTOR COMPLETELY WIRED INTO THE NEW SWITCHGEAR. INSTALLATION SHALL BE IN ACCORDANCE WITH MANUFACTURER'S RECOMENDATIONS.

Approved for Construction
Moffett Field Permit Board
Chief Building Official
Permit No. 11P038

ZONE	LETTER	DESCRIPTION	DRAWN	DATE	APPRVD

REVISIONS

DRAWN N.NIZAMOVA	DATE 9/21/11	
DESIGNED N.NIZAMOVA	DATE 9/21/11	
CHECKED J.McCUSKER	DATE 9-21-11	
PROJMGR F.JONES	DATE 9.23.11	
REQUESTER D.TRAN	DATE 9/26/11	
R&QA	DATE	
SAFETY	DATE	
SUPERVISOR S.FRANKEL	DATE OCT 21 2011	

REGISTERED PROFESSIONAL ENGINEER JAMES T. McCUSKER No. E013639 ELECTRICAL STATE OF CALIFORNIA

Ames Research Center
Moffett Field, California

RESTORATION OF ELECTRICAL DISTRIBUTION SYSTEM–HIGH VOLTAGE WP1
N227D OUTDOOR SUBSTATION
ELECTRICAL

THREE LINE DIAGRAM
NEW WORK

SIZE	CAGE CODE	DWG NO.	REV
D	25307	A1–––1001–E35	
SCALE	AS NOTED	INDEX	SHEET 1 OF 1

FILE NAME: A1–––1001–E35_1_R7B.DWG 9–21–11

601767753.0001

DWG: \\N213FS2\Proj\REDS\601767753 (K10768)_REDS – High Voltage\500 CAD\REDS_HV–WP1\N227D–Substation\S\Sheet\A1–––1001–E035_1_R4H.DWG Version: 17.1s (LMS Tech) User: poldenburg
DATE: Sep 20, 2011 – 5:25:10 pm

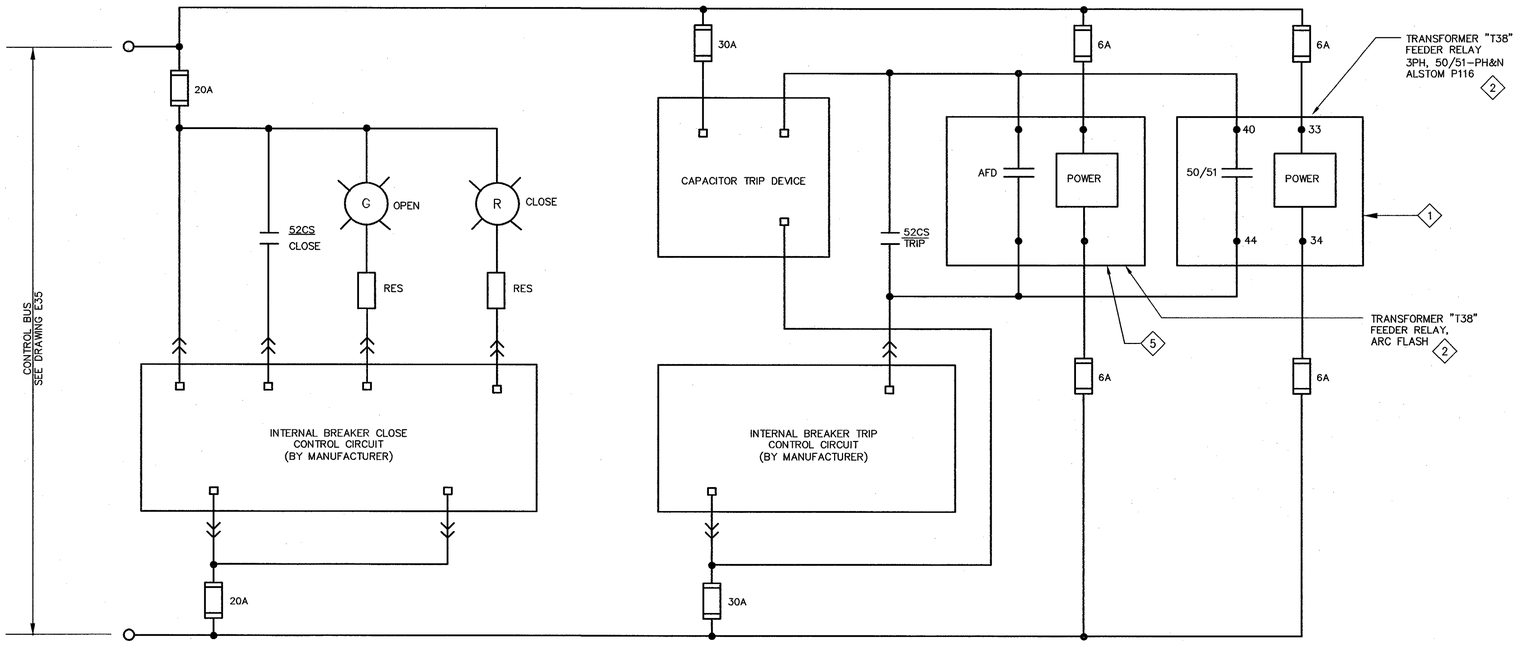

1 VCB689 BREAKER CONTROL DIAGRAM – NEW WORK

SCALE: NTS

SHEET NOTES

1. FOR GENERAL NOTES, SYMBOLS AND ABREVIATIONS, SEE DRAWING G4.
2. SEE DRAWING E31 FOR SINGLE LINE DIAGRAM.
3. DARK OR HEAVY LINES INDICATE NEW MATERIAL/EQUIPMENT TO BE PROVIDED. U.O.N.
4. THE DIAGRAM IS PROVIDED FOR GUIDANCE ONLY. THE CONTRACTOR SHALL FIELD VERIFY ALL EXISTING EQUIPMENT INCLUDING TERMINAL BLOCKS, TERMINAL IDENTIFICATION NUMBER, CONNECTIONS ETC. AND REVISE DRAWINGS AS NEEDED TO MATCH EXISTING AND NEW EQUIPMENT TO PROVIDE A COMPLETE FUNCTIONAL SYSTEM.
5. NEW TERMINAL MARKINGS ARE BASED ON CUTLER HAMMER INFORMATION.

KEY NOTES

1. INSTALL NEW GFE 3-PHASE MICROPROCESSOR BASED RELAY, ALSTOM MICOM P124, COMPLETELY WIRED INTO THE EQUIPMENT.
2. TYPICAL BREAKER CONTROL DIAGRAMS WITH THE RELATED TRANSFORMER FEEDER RELAYS. FOR SUBSTATION ONE LINE DIAGRAMS AND THREE LINE DIAGRAMS, REFER TO THE DRAWINGS E31 AND E35 RESPECTIVELY.
3. INSTALL NEW ARC FLASH DETECTOR COMPLETELY WIRED INTO THE EQUIPMENT.

Approved for Construction
Moffett Field Permit Board

Chief Building Official
Permit No. 11P038

ZONE	LETTER	DESCRIPTION	DRAWN	DATE	APPRVD

REVISIONS

DRAWN N.NIZAMOVA		DATE 9/21/11
DESIGNED N.NIZAMOVA		DATE 9/21/11
CHECKED J.McCUSKER		DATE 9-21-11
PROJMGR F.JONES		DATE 9-23-11
REQUESTER D.TRAN		DATE 9/26/11
R&QA		DATE
SAFETY		DATE
SUPERVISOR S.FRANKEL		DATE OCT 21 2011

REGISTERED PROFESSIONAL ENGINEER JAMES T. McCUSKER No. E013699 ELECTRICAL STATE OF CALIFORNIA

Ames Research Center
Moffett Field, California

RESTORATION OF ELECTRICAL DISTRIBUTION SYSTEM–HIGH VOLTAGE WP1
N227D OUTDOOR SUBSTATION
ELECTRICAL

VCB689 BREAKER CONTROL DIAGRAM
NEW WORK

SIZE	CAGE CODE		REV
D	25307	A 1---1001-E36	
SCALE	AS NOTED	INDEX	SHEET 1 OF 1

FILE NAME: A1---1001-E036_1_R7B.DWG 9-21-11

60176753.0001

DWG: \\N213FS2\Proj\REDS\60176753 (K10018)_REDS - High Voltage\500 CAD\REDS_HV-WP1\N227D-Substation\E\Sheet\A1---1001-E036_1_RHV.DWG Version: 17.1s (LMS Tech) User: polden
DATE: Sep 20, 2011 - 5:25:20 pm

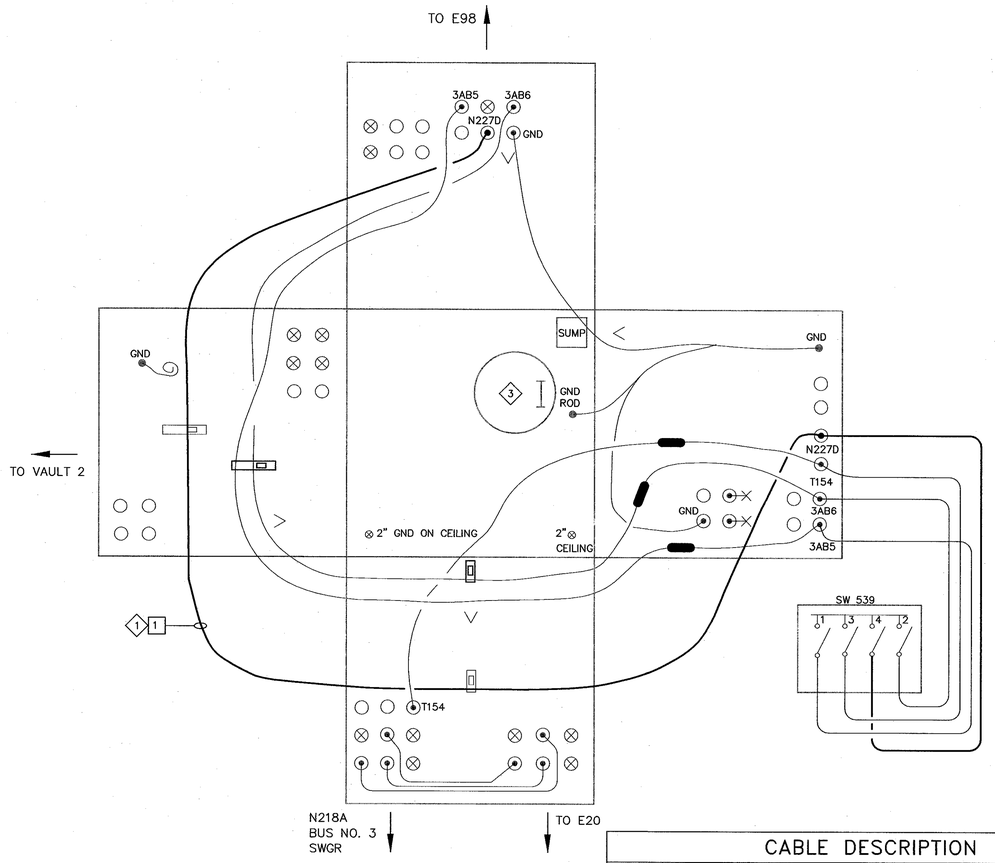

CABLE DESCRIPTION	
1	15kV, 3-1/C-350 kCMIL, 133% INS EPR CABLE & 1/C #4/0 GND

1 MANHOLE NO. 69 DETAIL – NEW WORK ◇3
SCALE: NTS (N.E. CORNER OF N216B ON WARNER RD.)

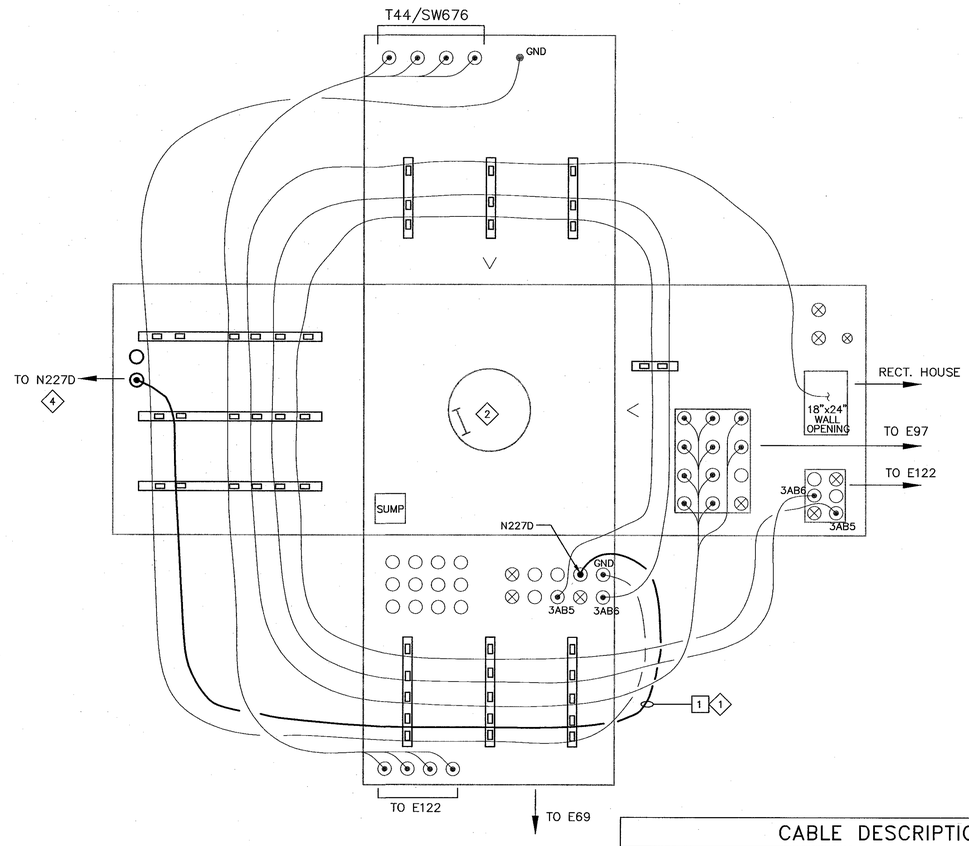

CABLE DESCRIPTION	
1	15kV, 3-1/C-350 kCMIL, 133% INS EPR CABLE & 1/C #4/0 GND

2 MANHOLE NO. 98 DETAIL – NEW WORK ◇2 N
SCALE: NTS (N227D SUB DRIVEWAY)

SHEET NOTES

1. FOR GENERAL NOTES, ABBREVIATIONS AND SYMBOLS, SEE DRAWING G4.
2. SHEET NOTES #1,2,3 ARE NOT PART OF THIS CONTRACT (THE INTENTION IS FOR NASA 'IN-HOUSE' USE)
3. THIS DRAWING IS NOT THE CONTROLLED NASA AMES CONFIGURATION MANAGEMENT BASELINE DRAWING.
4. THE AMES CONFIGURATION MANAGEMENT BASELINE DRAWINGS THAT WAS USED TO CREATE THE PROJECT DRAWING ARE A1---9801-E69 & A1---9801-E98.
5. NOT ALL CONDUITS AND CONDUCTORS ARE SHOWN ON DRAWING.
6. HATCHED LINES INDICATE EXISTING MATERIAL/EQUIPMENT TO BE DEMOLISHED AND REMOVED, U.O.N.
7. CONTRACTOR SHALL FIELD VERIFY ALL MEASUREMENTS AT THE SITE AND SHALL BE RESPONSIBLE FOR THEIR ACCURACY PRIOR TO STARTING ANY WORK OR ORDERING ANY MATERIAL.
8. UPON COMPLETION OF CABLE WORK AND PRIOR ENERGIZATION, CONTRACTOR SHALL INFORM GOVERNMENT FOR TAKING AS-BUILT PHOTOS AND UPDATING OF NASA REFERENCE DWG.
9. NEW CABLE ROUTING INSIDE THE MANHOLE IS SHOWN DIAGRAMMATICALLY. EXACT CABLE ROUTING INSIDE MANHOLE SHALL BE IN ACCORDANCE WITH DWG E69.
10. FOR N227D INDOOR/OUTDOOR SUBSTATION SITE PLAN – EXISTING/DEMO AND NEW WORK SEE DRAWING E32.
11. LIGHT LINES INDICATE EXISTING CONDITION AND DARK LINES INDICATE NEW WORK.

KEY NOTES

◇1 PROVIDE 15kV, 3-1/C-350kCMIL, 133 % INS., EPR CABLE AND 1/C 4/0 GND TO VCB088. INSTALL FEEDER IDENTIFICATION TAG & PHASE IDENTIFICATION COLOR TAPE.

◇2 MANHOLE OPENING SIZE: 30" DIA x 24" DEEP.

◇3 MANHOLE OPENING SIZE: 36" DIA x 32" DEEP.

◇4 CORE DRILL 2-4" OPENING AND INSTALL 2-4" CONCRETE ENCASED DUCTS FROM MH98 TO NEW SUBSTATION AS SHOWN ON DRAWING E34. INSTALL END-BELLS ON EACH DUCT FLUSH WITH MANHOLE WALL.

REF. DWGS.

A1---9801-E69-----AMES RESEARCH CENTER SITE UNDERGROUND POWER DISTRIBUTION. MANHOLE E69 DETAILS

A1---9801-E98-----AMES RESEARCH CENTER SITE UNDERGROUND POWER DISTRIBUTION. MANHOLE E98 DETAILS

REGISTERED PROFESSIONAL ENGINEER JAMES T. McCUSKER No. E013699 ELECTRICAL STATE OF CALIFORNIA

Approved for Construction
Moffett Field Permit Board
Chief Building Official
Permit No. 11P038

ZONE	LETTER	DESCRIPTION	DRAWN	DATE	APPRVD

REVISIONS

DRAWN N.NIZAMOVA	DATE 9/21/11	
DESIGNED N.NIZAMOVA	DATE 9/21/11	
CHECKED J.McCUSKER	DATE 9-22-11	
PROJMGR F.JONES	DATE 9.23.11	
REQUESTED D.TRAN	DATE 9/22/11	
R&QA	DATE	
SAFETY	DATE	
SUPERVISOR S.FRANKEL	DATE OCT 21 2011	

Ames Research Center
Moffett Field, California

RESTORATION OF ELECTRICAL DISTRIBUTION SYSTEM-HIGH VOLTAGE WP1
N227D OUTDOOR SUBSTATION
ELECTRICAL

MANHOLES NO. E69 & E98 DETAILS NEW WORK

SIZE	CAGE CODE	
D	25307	A 1---1001-E37 REV
SCALE AS NOTED	INDEX	SHEET 1 OF 1

FILE NAME: A1---1001-E037_1_R7B.DWG 9-21-11

60176753.0001

DWG: \\V213FSO\Pro\REDS\60176753 (K10018)_REDS - High Voltage\500 CAD\REDS_HV-WP1\N227D-Substation\E\Sheet\A1---1001-E037_1_R4V.DWG Version: 17.1s (LMS Tech) User: polden
DATE: Sep 20, 2011 - 2:22:25 pm

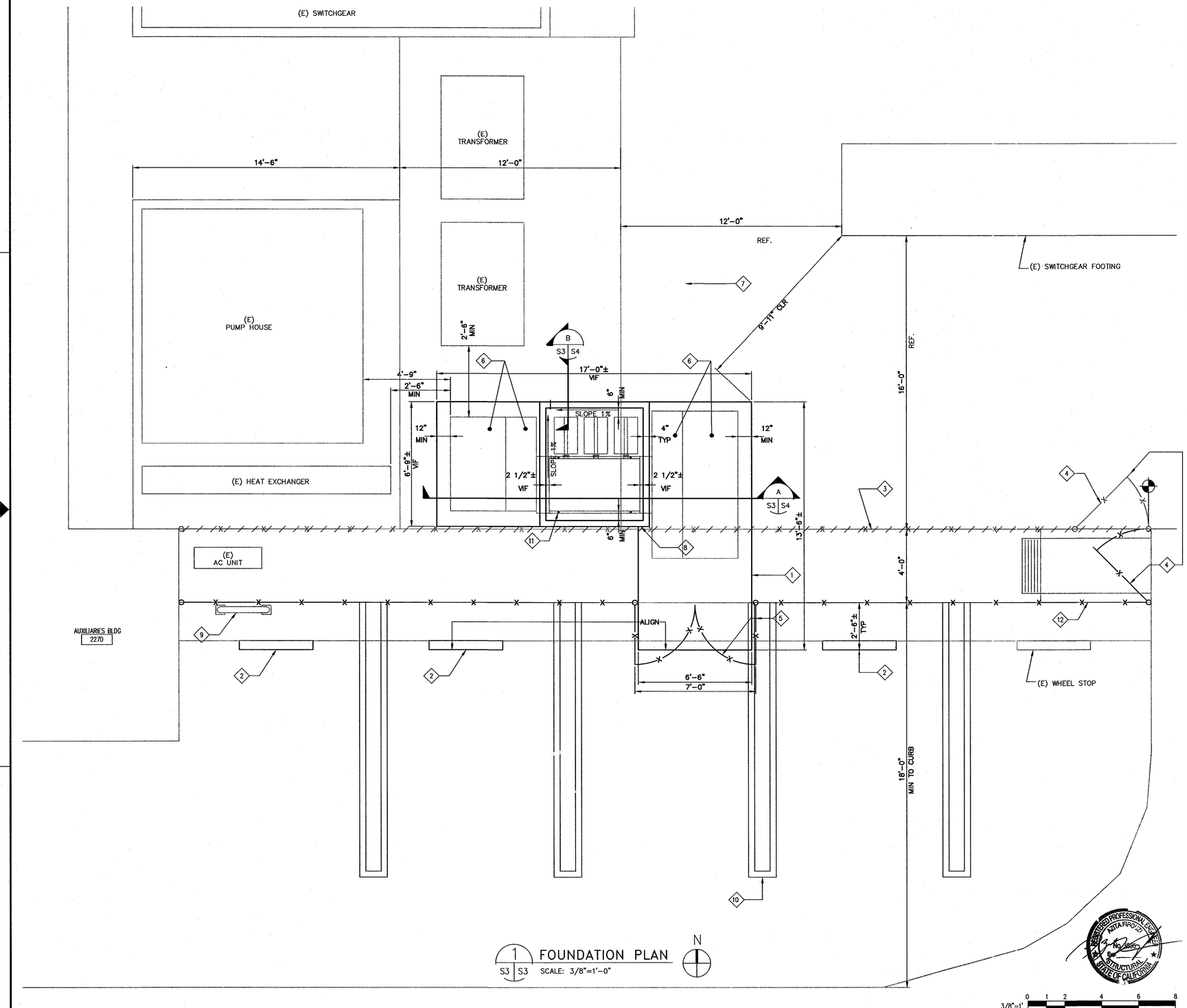

1 FOUNDATION PLAN
S3 S3 SCALE: 3/8"=1'-0"

3/8"=1' 0 1 2 4 6 8

SHEET NOTES

1. FOR GENERAL STRUCTURAL NOTES, SYMBOLS AND ABREVIATIONS SEE DRAWING S1.

KEY NOTES

1. SAW CUT (E) A.C. FOR (N) CONC EQUIPMENT PAD.
2. PROVIDE WHEEL STOPS IN (E) PARKING LOT TO MATCH (E) ONE. CENTER ON PARKING SPACE, UNO.
3. REMOVE (E) FENCE AS INDICATED.
4. REMOVE (E) MANDOOR AND RELOCATE TO NEW LOCATION. SALVAGE THE GATE LEAF AND PROVIDE NEW POSTS AS REQUIRED.
5. PROVIDE (N) 7'-0" WIDE SERVICE GATE (GATE BOTTOM NEED TO BE ADJUSTED FOR 6" CONCRETE HOUSEKEEPING PAD ELEVATION).
6. 1/2"ø THREADED ROD W/ HILTI RE-500 SD ADHESIVE ANCHOR, MIN. 8" EMBEDMENT, TOTAL OF 4 ANCHOR BOLTS PER EQUIPMENT.
7. EDGE OF (E) CONCRETE PAD.
8. RELOCATE (E) PIPES PER MECHANICAL DRAWING M2.
9. (E) BOLLARDS, TO REMAIN.
10. PARKING STRIPS (4) TO BE REPAINTED (TO MATCH (E)) AFTER SAWCUTTING AND REPAVING RELATED TO GROUNDING CABLE INSTALLATION, SEE PLAN E34.
11. ANCHOR BOLT SIZE, NUMBERS AND LOCATION SHALL BE COORDINATED WITH EQUIPMENT'S MANUFACTURER DRAWINGS. SEE DETAIL A/S4 FOR ANCHOR BOLT SIZE.
12. PROVIDE 7'-0" HIGH CHAIN LINK FENCE AS INDICATED ON DRAWING. SEE SHEET S5 FOR DETAILS.

KEY PLAN

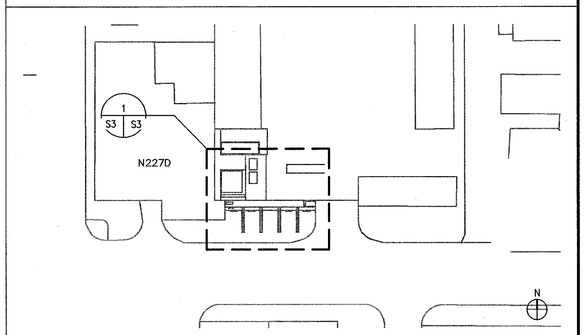

Approved for Construction
Moffett Field Permit Board

Chief Building Official
Permit No. 11P038

ZONE	LETTER	DESCRIPTION	DRAWN	DATE	APPRVD

REVISIONS

DRAWN F.BONALDI		DATE 9.22.11
DESIGNED A.FIROUZI		DATE 9.22.11
CHECKED N.SHAH	A. Firouzi for Nutan Shah	DATE 9.22.11
PROJMGR F.JONES		DATE 9.23.11
REQUESTER D.TRAN		DATE 9/26/11
R&QA		DATE
SAFETY		DATE
SUPERVISOR S.FRANKEL		DATE OCT 21 2011
		DATE

Ames Research Center
Moffett Field, California

RESTORATION OF ELECTRICAL DISTRIBUTION SYSTEM-HIGH VOLTAGE WP1
N227D OUTDOOR SUBSTATION
STRUCTURAL

FOUNDATION PLAN

SIZE	CAGE CODE		REV
D	25307	A 1---1001-S3	
SCALE AS NOTED		INDEX	SHEET 1 OF 1

FILE NAME: A1---1001-S003_1_R7B.DWG 9-21-11

60176753.0001

DWG: \\N213FS2\Proj\REDS\60176753 (K10018)_REDS - High Voltage\500 CAD\REDS_HV-WP1\N227D-Substation\S\Sheet\A1---1001-S003_1_RHV.dwg Version: 17.1s (LMS Tech) User: polden
DATE: Sep 20, 2011 - 5:25:32 pm

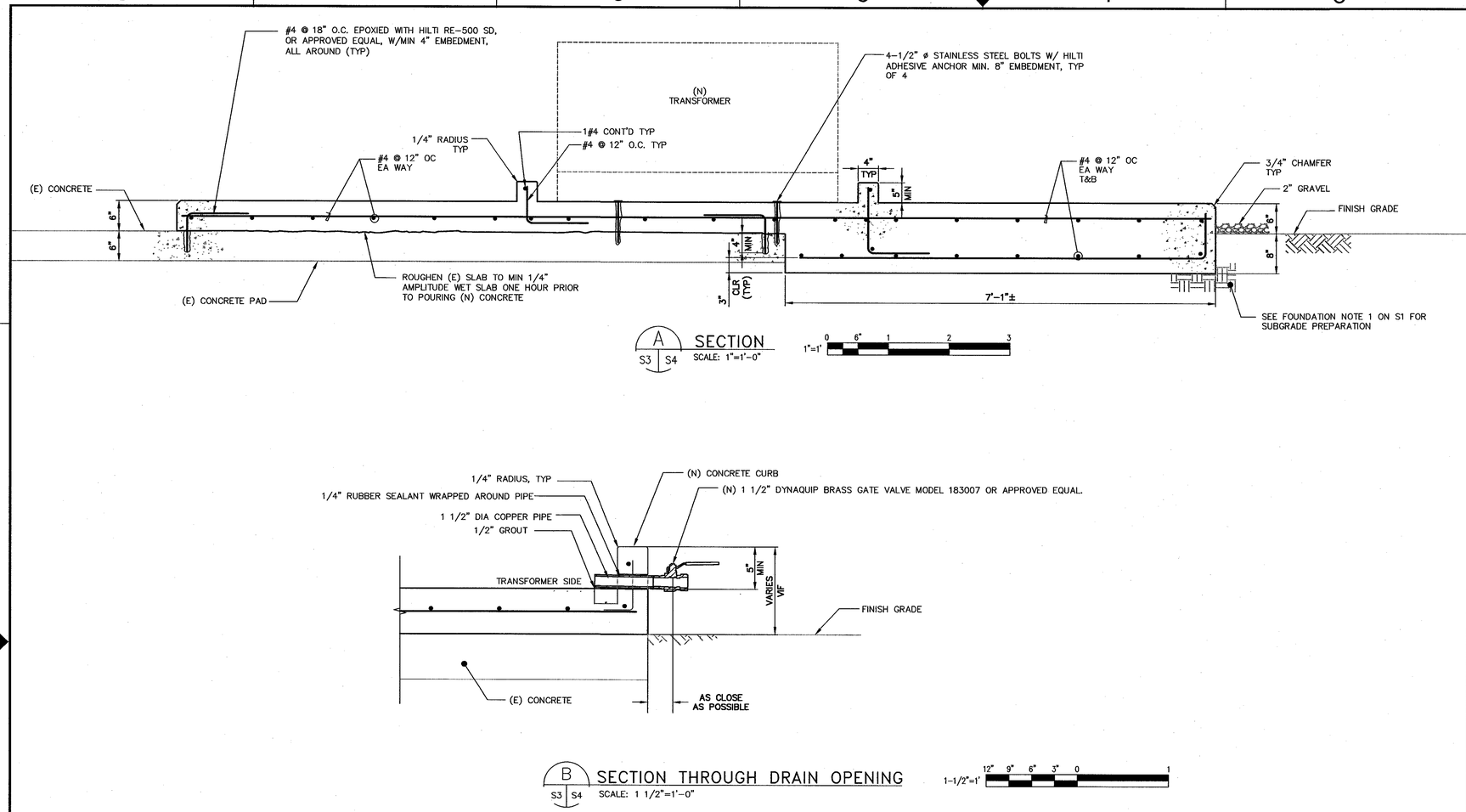

DWG NO.	SH.	REV
A1---1001-S4	1	

SHEET NOTES

1. FOR GENERAL STRUCTURAL NOTES, SYMBOLS AND ABREVIATIONS SEE DRAWING S1.

KEY NOTES

Approved for Construction
Moffett Field Permit Board

Chief Building Official
Permit No. 11P038

ZONE	LETTER	DESCRIPTION	DRAWN	DATE	APPRVD

REVISIONS

DRAWN F.BONALDI	DATE 9.22.11	Ames Research Center Moffett Field, California
DESIGNED A.FIROUZI	DATE 9.22.11	RESTORATION OF ELECTRICAL DISTRIBUTION SYSTEM-HIGH VOLTAGE WP1 N227D OUTDOOR SUBSTATION STRUCTURAL
CHECKED N.SHAH A. Firouzi for Nelson Shah	DATE 9.22.11	SECTIONS
PROJMGR F.JONES	DATE 9.23.11	
REQUESTED D.TRAN	DATE 9/26/11	
R&QA	DATE	
SAFETY	DATE	
SUPERVISOR S.FRANKEL	DATE OCT 21 2011	SIZE D · CAGE CODE 25307 · A 1---1001-S4 · REV
	DATE	SCALE AS SHOWN · INDEX · SHEET 1 OF 1

FILE NAME: A1---1001-S4_1_R7B.DWG 9-21-11

REGISTERED PROFESSIONAL ENGINEER AZITA FIROUZI No. 3536 STRUCTURAL STATE OF CALIFORNIA

60176753.0001

DWG: \\N213FS2\Proj\REDS\60176753 (K10018)_REDS - High Voltage\500 CAD\REDS_HV-WP1\N227D-Substation\S\Sheet\A1---1001-S004_1_RHV.dwg Version: 17.1s (LMS Tech) User: polden
DATE: Sep 20, 2011 - 5:25:39 pm

DWG NO. A1---1001-S5 | SH. 1 | REV

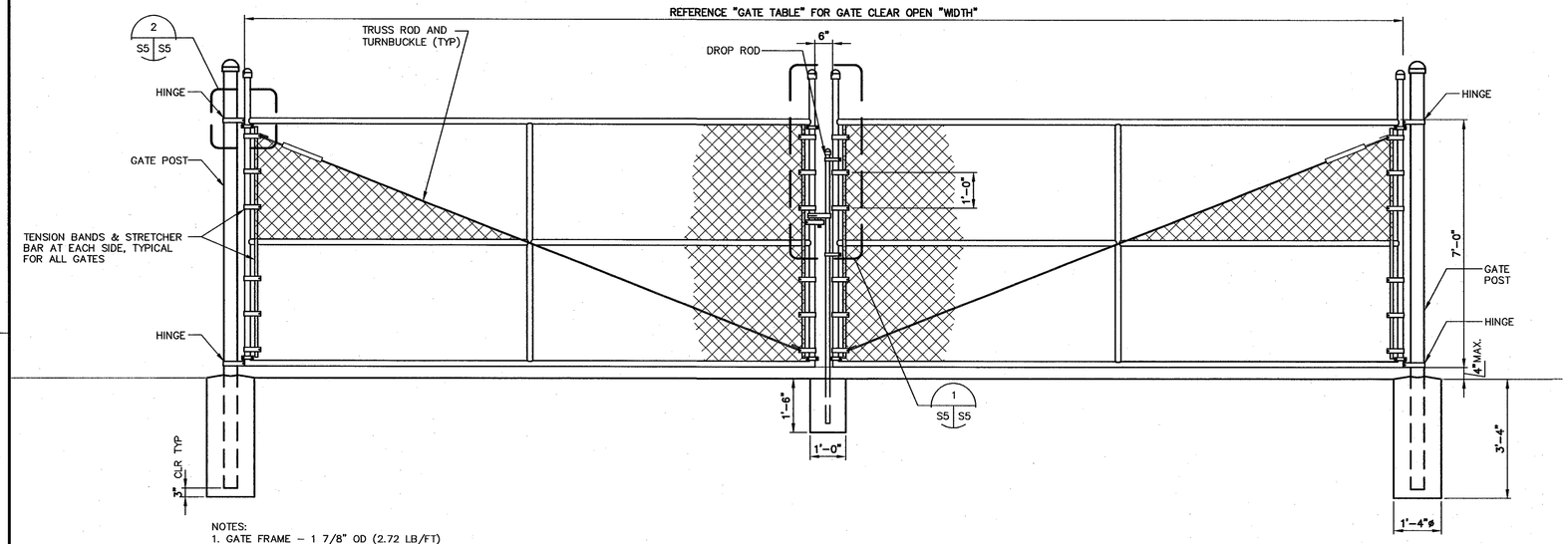

NOTES:
1. GATE FRAME – 1 7/8" OD (2.72 LB/FT)
2. GATE POST – 2 7/8" OD (5.79 LB/FT)
3. ALL POST FOOTINGS TO BE 3,000 PSI CONCRETE AT 28 DAYS.

A TYPICAL DOUBLE LEAF GATE ASSEMBLY DETAIL
NOT TO SCALE

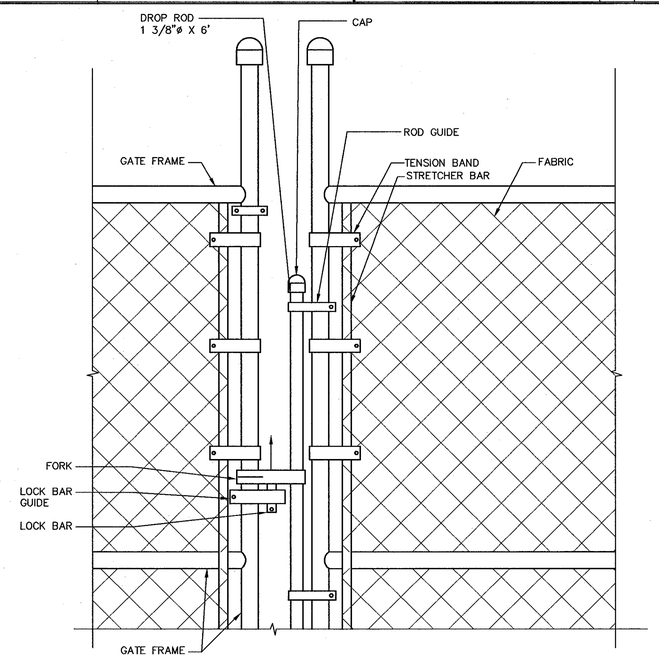

1 S5 S5 TYPICAL DROP ROD ASSEMBLY DETAIL
SCALE: 1 1/2" = 1'-0"

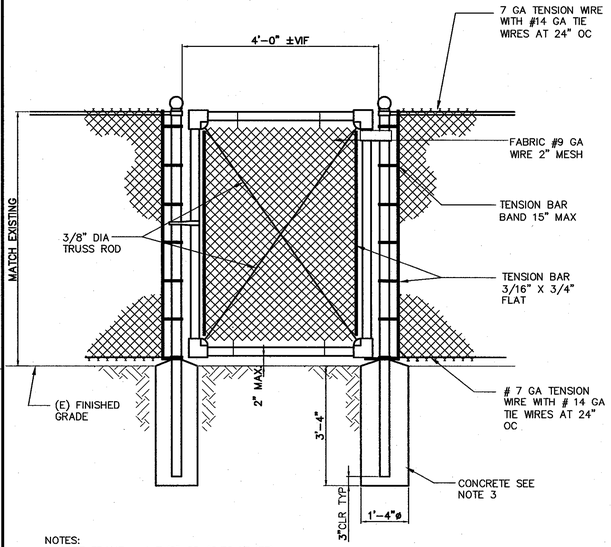

NOTES:
1. GATE FRAME – 1 7/8" OD (2.72 LB/FT)
2. GATE POST – 2 7/8" OD (5.79 LB/FT)
3. ALL POST FOOTINGS TO BE 3,000 PSI CONCRETE AT 28 DAYS.

B TYPICAL PERSONNEL ACCESS GATE
NOT TO SCALE

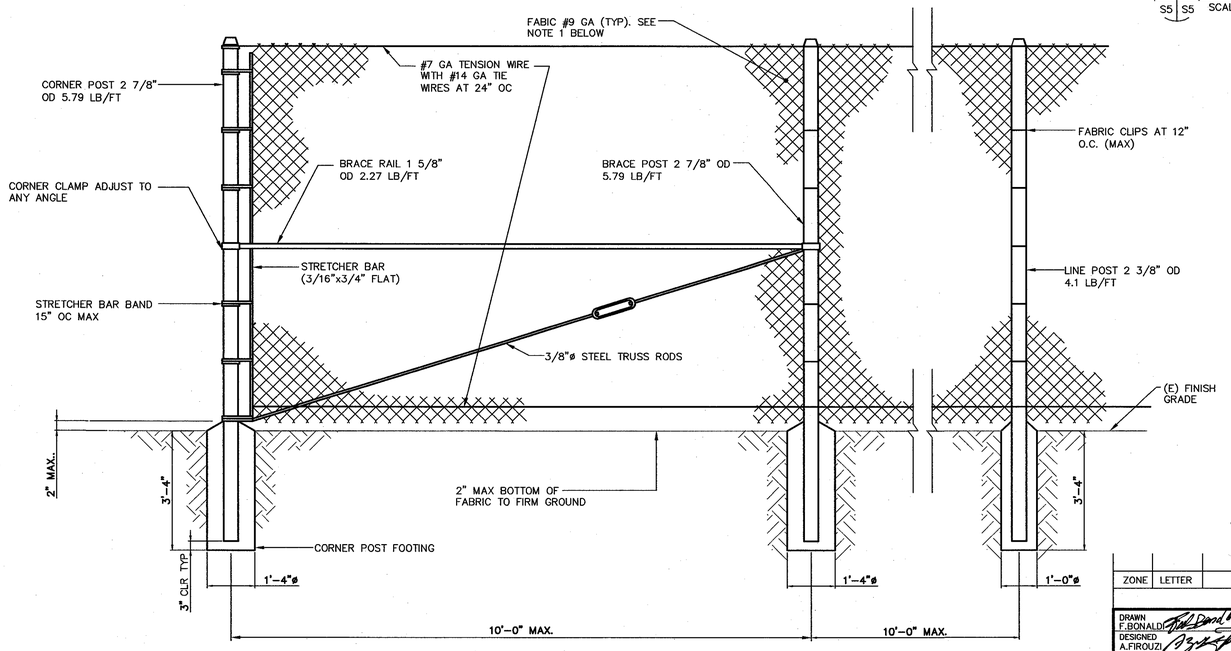

NOTES:
1. FABRIC #9 GA WIRE – 2" MESH. TOP AND BOTTOM SELVAGE TO HAVE TWISTED AND BARBED SELVAGES.
2. ALL POST FOOTINGS TO BE 3,000 PSI CONCRETE.

C TYPICAL CHAIN LINK FENCE
NOT TO SCALE

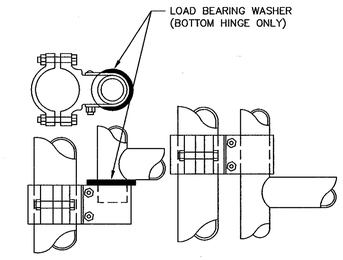

2 GATE HINGE DETAIL
SCALE: NTS

Approved for Construction
Moffett Field Permit Board
Chief Building Official
Permit No. 11P038

ZONE	LETTER	DESCRIPTION	DRAWN	DATE	APPRVD
REVISIONS					

DRAWN F.BONALDO	DATE 9.22.11	Ames Research Center, Moffett Field, California
DESIGNED A.FIROUZI	DATE 9.22.11	RESTORATION OF ELECTRICAL DISTRIBUTION SYSTEM–HIGH VOLTAGE WP1
CHECKED N.SHAH	DATE 9.22.11	N227D OUTDOOR SUBSTATION
PROJMGR F.JONES	DATE 9.23.11	STRUCTURAL
REQUESTER D.TRAN	DATE 9.26.11	FENCE DETAILS
R&QA	DATE	
SAFETY	DATE	
SUPERVISOR S.FRANKEL	DATE OCT 21 2011	SIZE D / CAGE CODE 25307 / A1---1001-S5 / REV
	DATE	SCALE AS NOTED / INDEX / SHEET 1 OF 1

FILE NAME: A1---1001-S005_1_R7B.DWG 9-21-11

60176753.0001

DWG: R:\REDS\60176753 (K10018)_REDS - High Voltage\S00 CAD\REDS_HV-WP1\N227D-Substation\S\Sheet\A1---1001-S005_1_RHV.dwg Version: 17.1s (LMS Tech) User: wbonoldi
DATE: Sep 22, 2011 - 12:39:49 pm

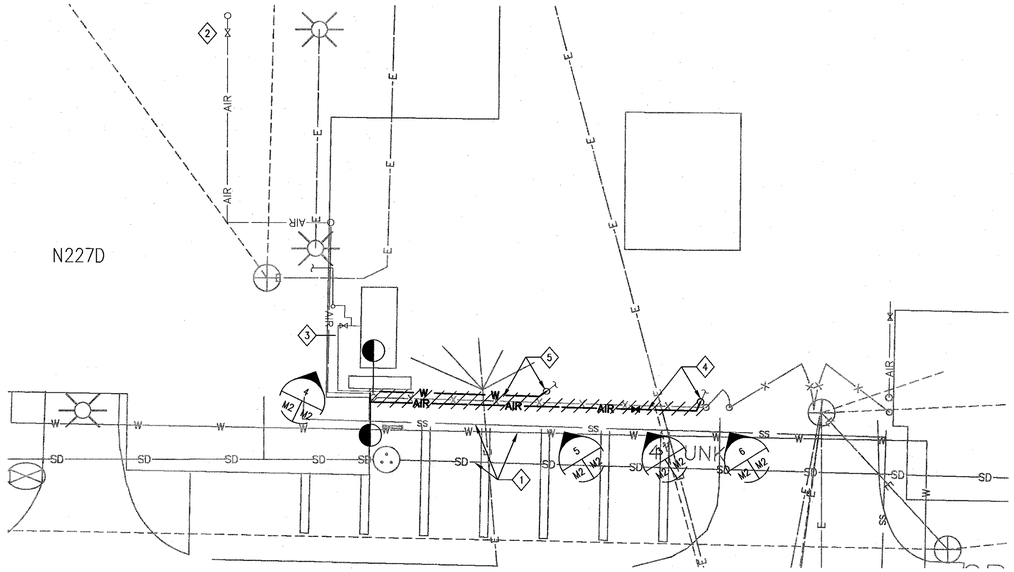

1 / E32 M2 MECHANICAL PLAN – DEMOLITION
SCALE: 3/32" = 1'-0"

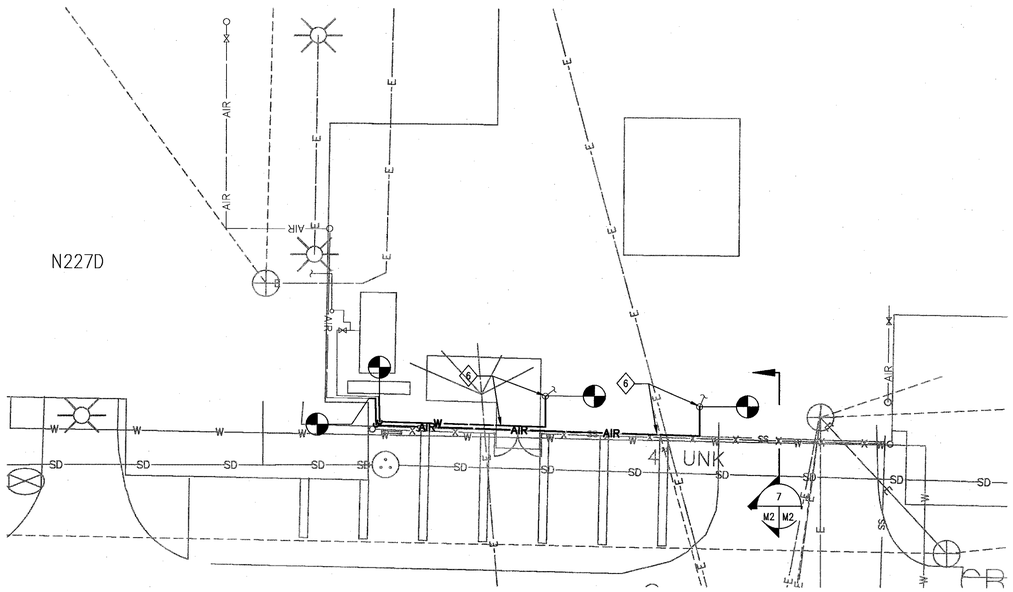

2 / E32 M2 MECHANICAL PLAN – NEW WORK
SCALE: 3/32" = 1'-0"

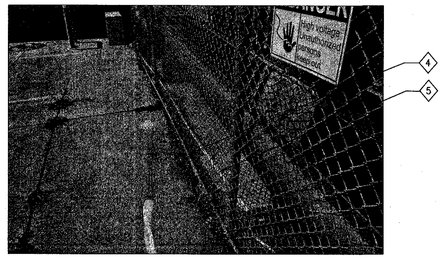

3 / M2 M2 CITY WATER AND AIR PIPING
SCALE: NTS

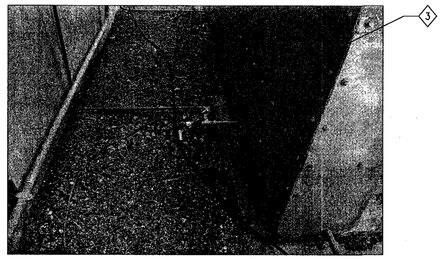

4 / M2 M2 CITY WATER ISOLATION VALVE
SCALE: NTS

5 / M2 M2 CITY WATER PIPING
SCALE: NTS

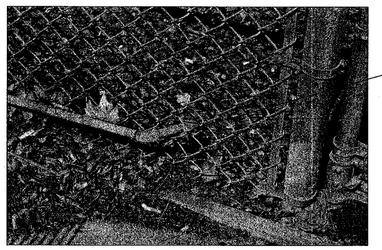

6 / M2 M2 AIR PIPING
SCALE: NTS

3/32"=1' 0 8 16 24

SHEET NOTES

1. FIELD VERIFY ALL DIMENSION AND EXISTING CONDITION.
2. DO NOT SCALE THESE DRAWINGS TO DRIVE DIMENSIONAL INFORMATION. DIMENSIONS SHOWN ARE APPROXIMATE AND FOR REFERENCE ONLY.
3. EXISTING UTILITIES ARE SHOWN SCHEMATICALLY AND THEIR LOCATIONS ARE APPROXIMATE CONTRACTOR SHALL LOCATE & IDENTIFY THE EXACT LOCATION OF EXISTING UTILITIES PRIOR TO ANY DEMOLITION.

KEY NOTES

1. EXISTING WATER, SANITARY SEWER AND STORM DRAIN LINES UNDERGROUND TO REMAIN. CONTRACTOR SHALL PROTECT & AVOID DAMAGING THESE LINES. NOTE: ALL OTHER NON MECHANICAL UTILITIES ARE NOT SHOWN.
2. TURN OFF EXISTING AIR VALVE PRIOR TO DEMOLITION AND RELOCATION OF THE PIPING. COORDINATE WITH THE USER TWO (2) DAYS PRIOR TO CONSTRUCTION.
3. TURN OFF EXISTING CITY WATER SERVING DEIONIZED WATER SYSTEM PRIOR TO DEMOLITION AND RELOCATION OF THE PIPING. COORDINATE WITH SCOTT EDDLEMAN AT (650) 604-6075 TWO (2) DAYS PRIOR TO CONSTRUCTION.
4. DISCONNECT AND REMOVE EXISTING ABOVEGROUND AIR PIPING TO THE POINT INDICATED. PREPARE PIPING FOR NEW CONNECTION.
5. DISCONNECT AND REMOVE EXISTING ABOVEGROUND WATER PIPING TO THE POINT INDICATED. PREPARE PIPING FOR NEW CONNECTION.
6. CUT THE PAVEMENT, TRENCH AND EXCAVATE 36" BELOW GROUND. RUN 3/4" GALVANIZED AIR (MACHINE WRAPPED WITH 20 MIL POLYEHYLENE FILM TAPE) AND 3/4" PVC DOMESTIC WATER PIPING. CONNECT TO EXISTING LINES AT THE POINT SHOWN. SEE DETAIL 1/M2 FOR TRENCH BACKFILL.

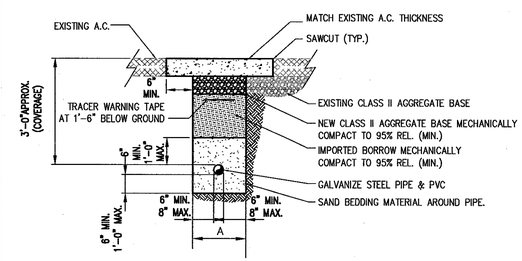

PIPE ø	A
3/4" ø	12"

7 / M2 M2 TRENCH BACKFILL SECTION–B
SCALE: NTS

Approved for Construction
Moffett Field Permit Board

Chief Building Official
Permit No. 11P038

ZONE	LETTER	DESCRIPTION	DRAWN	DATE	APPRVD
		REVISIONS			

DRAWN C.WONG	DATE 9/23/11	
DESIGNED V.JAMNEJAD	DATE 9/21/11	
CHECKED J.XIANG	DATE 9/22/11	
PROJMGR F.JONES	DATE 9-23-11	
REQUESTER D.TRAN	DATE 9/26/11	
R&QA	DATE	
SAFETY	DATE	
SUPERVISOR S.FRANKEL	DATE OCT 31 2011	
	DATE	

REGISTERED PROFESSIONAL ENGINEER — JIN F. XIANG — Exp. 6/30/13 — CIVIL ENGINEER — STATE OF CALIFORNIA

Ames Research Center
Moffett Field, California

RESTORATION OF ELECTRICAL DISTRIBUTION SYSTEM–HIGH VOLTAGE WP1
N227D OUTDOOR SUBSTATION
MECHANICAL

MECHANICAL PLAN DEMOLITION AND NEW WORK

SIZE	CAGE CODE	A1---1001-M2	REV
D	25307		A
SCALE	AS NOTED	INDEX	SHEET OF

FILE NAME: A1---1001-M02_RHV 9-21-11

60176753.0001

DWG: \\N213FS2\Proj\REDS\60176753 (K10018)_REDS - High Voltage\50D CAD\REDS_HV-WP1\N227D-Substation\M\Sheet\A1---1001-M002_RHV.dwg Version: 17.1s (LMS Tech) User: polden
DATE: Sep 22, 2011 - 1:36:04 pm

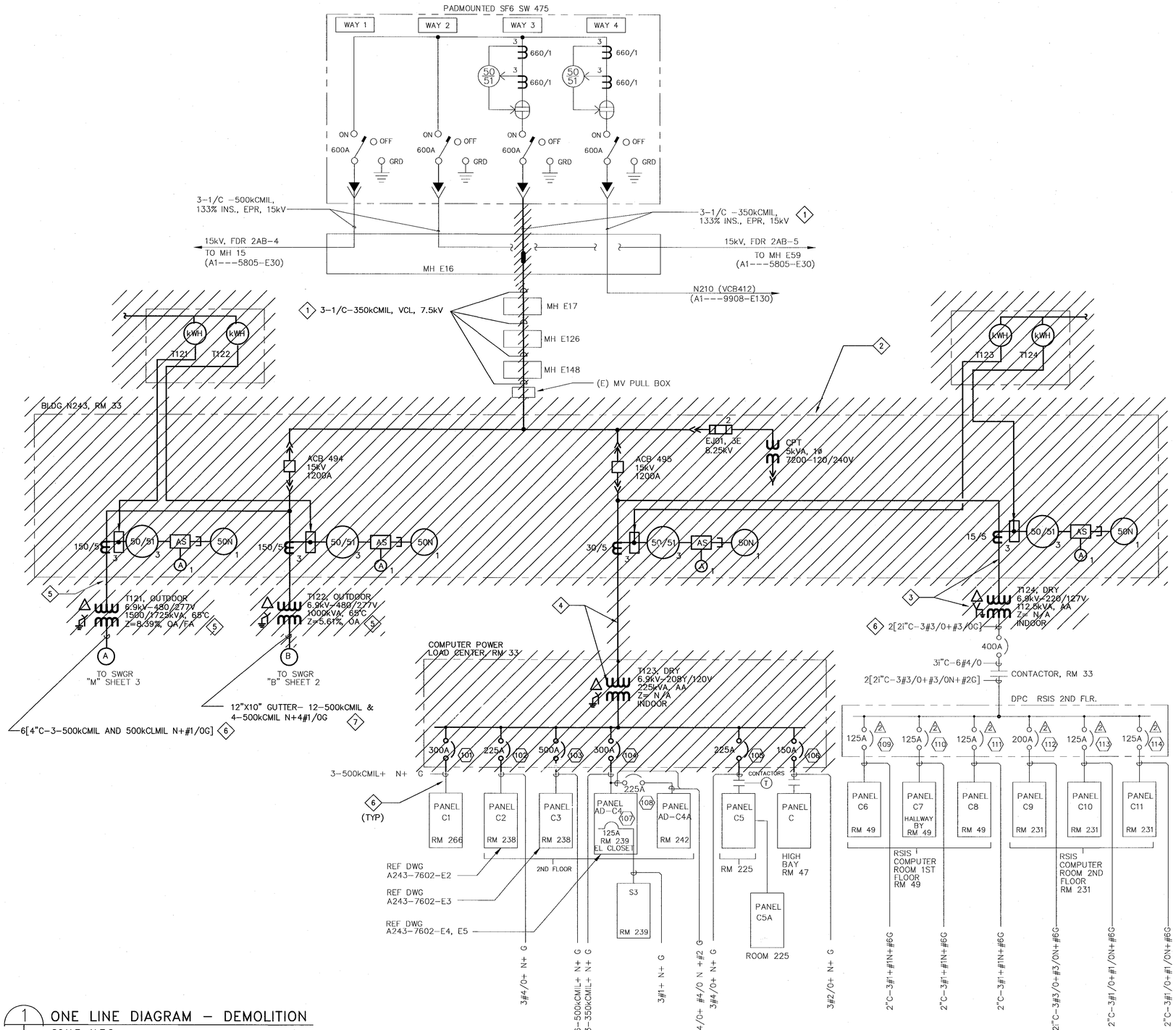

1 ONE LINE DIAGRAM - DEMOLITION
SCALE: N.T.S.

SHEET NOTES

1. FOR GENERAL NOTES, SYMBOLS AND ABBREVIATIONS, SEE DRAWING G4.
2. NOT ALL CONDUITS AND CONDUCTORS ARE SHOWN ON THE DRAWING.
3. SINGLE LINE DIAGRAMS ARE BASED ON THE LATEST KNOWN EXISTING DRAWINGS.
4. HATCHED LINES INDICATE EXISTING MATERIAL AND EQUIPMENT TO BE DEMOLISHED/ REMOVED, U.O.N.
5. PRIOR TO SHUTDOWN AND DEMOLITION WORK, CONTRACTOR SHALL PERFORM PHASE SEQUENCE TEST ON EXISTING SYSTEM IN THE PRESENCE OF THE CONTRACTING OFFICER. ALL DISCONNECTED CABLES THAT ARE TO REMAIN SHALL BE PROPERLY IDENTIFIED, TAGGED FOR RESTORATION IN NEW WORK.

KEY NOTES

1. DISCONNECT AND REMOVE EXISTING INCOMING CABLE FROM SW475 TO ACB494 & ACB495.
2. REMOVE EXISTING PRIMARY SWITCHGEAR AND CIRCUIT BREAKER ACB494 & ACB495 AND ALL ASSOCIATED EQUIPMENT & DEVICES.
3. REMOVE EXISTING TRANSFORMER T124 AND ALL ASSOCIATED EQUIPMENT & DEVICES; AND FEEDER CABLE FROM ACB495.
4. REMOVE EXISTING TRANSFORMER T123 & EXISTING COMPUTER LOAD CENTER DISTRIBUTION PANEL AND ALL ASSOCIATED EQUIPMENT & DEVICES; AND FEEDER CABLE FROM ACB495.
5. REMOVE EXISTING TRANSFORMERS T121 & T122 AND ALL ASSOCIATED EQUIPMENT & DEVICES; AND FEEDER CABLES FROM ACB494.
6. DISCONNECT & PULL BACK EXISTING FEEDER CONDUIT/CABLES FOR RECONNECTION IN NEW WORK.
7. REMOVE EXISTING 480V FEEDER CABLES BETWEEN T122 AND BLDG POWER SWITCHGEAR "B" AND SWBD "B1".

NASA REFERENCE DRAWINGS

A1---6303-E0	BLDG INDEX, CROSS-REF, LEGEND & ABBR.
A1---5805-E30	SYSTEM A & B SINGLE LINE DIAGRAM
A1---6303-E14	BLDG N210 ONE LINE POWER DIAGRAM
A1---6303-E26	BLDGS N243, N243A ONE LINE POWER DIAGRAM (4 SHTS)
A243-6502-E2	BLDG N243 6.9KV SWITCHGEAR WIRING DIAGRAM
A243-6502-E3	BLDG N243 6.9KV SWITCHGEAR WIRING DIAGRAM
A243-6502-E5	BLDG N243 6.9KV SWITCHGEAR ELEM DIAGRAM
A243-6502-E6	BLDG N243 6.9KV SWITCHGEAR ELEM DIAGRAM
A343-8101-E2018	

REGISTERED PROFESSIONAL ENGINEER JAMES T. McCUSKER No. E013699 ELECTRICAL STATE OF CALIFORNIA

Approved for Construction
Moffett Field Permit Board
Chief Building Official
Permit No. 11P038

ZONE	LETTER	DESCRIPTION	DRAWN	DATE	APPRVD

REVISIONS

DRAWN N.NIZAMOVA	DATE 9/21/11	Ames Research Center, Moffett Field, California
DESIGNED L.BELTRAN/N.NIZAMOVA	DATE 9/21/11	RESTORATION OF ELECTRICAL DISTRIBUTION SYSTEM-HIGH VOLTAGE WP1 N243 INDOOR/OUTDOOR SUBSTATION ELECTRICAL
CHECKED J.McCUSKER	DATE 9-21-11	ONE LINE DIAGRAM DEMOLITION
PROJMGR F.JONES	DATE 9.23.11	
REQUESTER D.TRAN	DATE 9/26/11	
R&QA	DATE	
SAFETY	DATE	
SUPERVISOR S.FRANKEL	DATE OCT 21 2011	SIZE D; CAGE CODE 25307; A 1---1001-E38; REV; SCALE NONE; INDEX; SHEET 1 OF 3

FILE NAME: A1---1001-E038_1_R7.DWG 9-21-11

60176753.0001

DWG: \\N213FS01\Proj\REDS\60176753 (K10018)_REDS - High Voltage\500 CAD\REDS_HV-WP1\N243-Substation\E\Sheet\A1---1001-E038_1_RHV.DWG Version: 17.1s (LMS Tech) User: pdden
DATE: Sep 20, 2011 - 5:28:14 pm

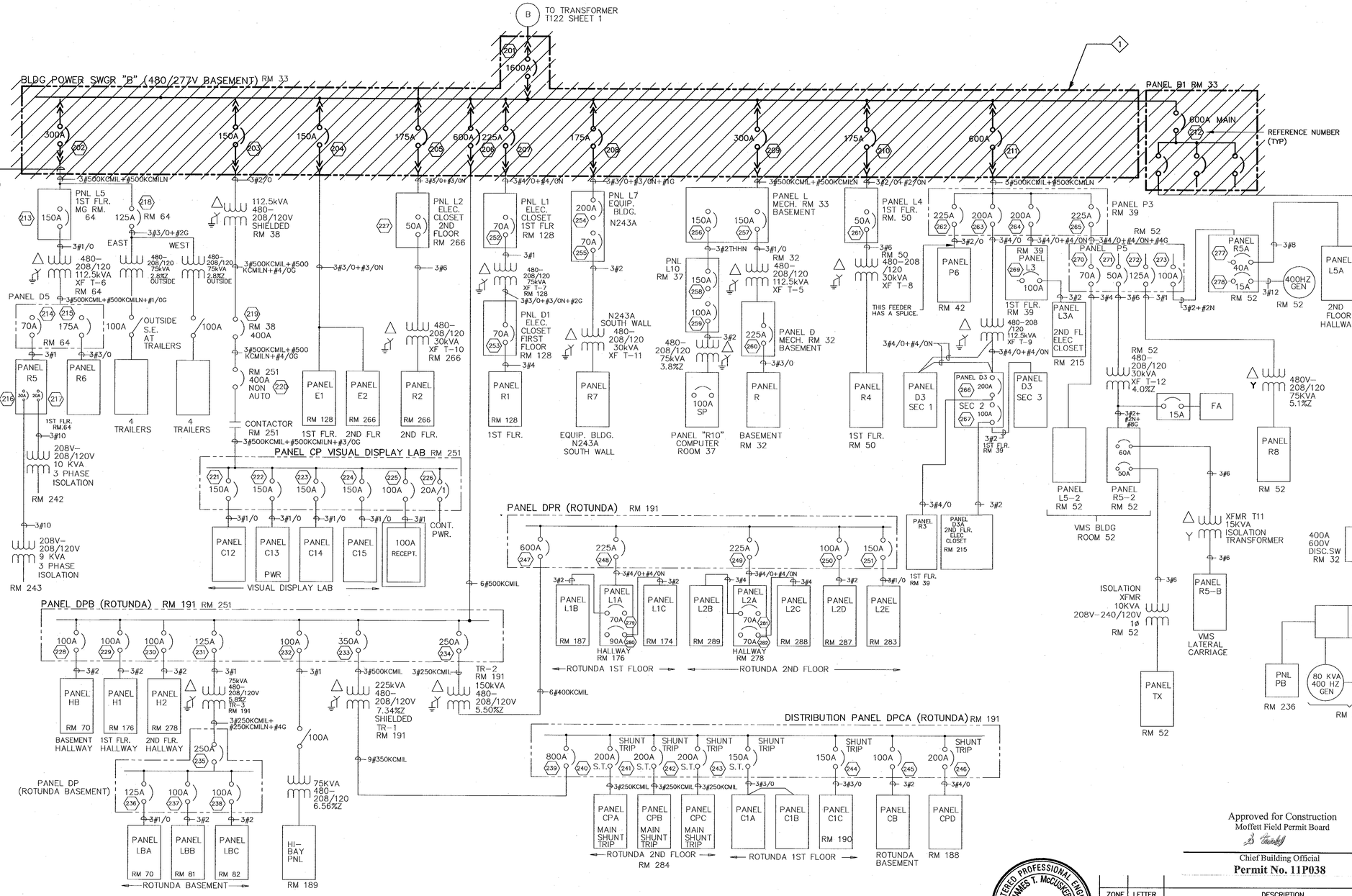

SHEET NOTES

1. FOR GENERAL NOTES, SYMBOLS AND ABBREVIATIONS, SEE DRAWING G4.
2. NOT ALL CONDUITS AND CONDUCTORS ARE SHOWN ON THE DRAWING.
3. SINGLE LINE DIAGRAMS ARE BASED ON THE LATEST KNOWN EXISTING DRAWINGS.
4. HATCHED LINES INDICATE EXISTING MATERIAL/EQUIPMENT TO BE DEMOLISHED/ REMOVED, U.O.N.
5. SEE SHEET 1 FOR NOTES.

KEY NOTES

1. REMOVE EXISTING 480V BLDG POWER SWGR "B" AND PANEL "B1" IN BASEMENT, ROOM 33; AND FEEDER CABLE FROM T122.
2. DISCONNECT AND PULL BACK EXISTING FEEDER CONDUIT/CABLES FOR RECONNECTION IN NEW WORK.

1 ONE LINE DIAGRAM – DEMOLITION
SCALE: N.T.S.

Approved for Construction
Moffett Field Permit Board
Chief Building Official
Permit No. 11P038

REGISTERED PROFESSIONAL ENGINEER JAMES T. McCUSKER No. E013699 ELECTRICAL STATE OF CALIFORNIA

ZONE	LETTER	DESCRIPTION	DRAWN	DATE	APPRVD
REVISIONS					

DRAWN N.NIZAMOVA	DATE 9/21/11	Ames Research Center Moffett Field, California
DESIGNED L.BELTRAN/N.NIZAMOVA	DATE 9/21/11	
CHECKED J.McCUSKER	DATE 9-21-11	RESTORATION OF ELECTRICAL DISTRIBUTION SYSTEM–HIGH VOLTAGE WP1 N243 INDOOR/OUTDOOR SUBSTATION ELECTRICAL
PROJMGR F.JONES	DATE 9.23.11	ONE LINE DIAGRAM DEMOLITION
REQUESTER D.TRAN	DATE 9.23.11	
R&QA	DATE	
SAFETY	DATE	
SUPERVISOR S.FRANKEL	DATE OCT 21 2011	SIZE D / CAGE CODE 25307 / A 1---1001-E38 / REV
	DATE	SCALE NONE / INDEX / SHEET 2 OF 3

FILE NAME: A1---1001-E038_2_R7.DWG 9-21-11

60176753.0001

DWG: \\M213FS2\Proj\RESS\60176753 (K10016)_RESS - High Voltage\500 CAD\RESS_HV-WP1\N243-Substation\E\Sheet\A1----1001-E038_2_RHV.DWG Version: 17.1s (LMS Tech) User: patden
DWG: Sep 20, 2011 - 3:26:19 pm

DWG NO.	SH.	REV
A1---1001-E38	3	

SHEET NOTES

1. THIS DRAWING IS FOR REFERENCE USE ONLY, (N.I.C).

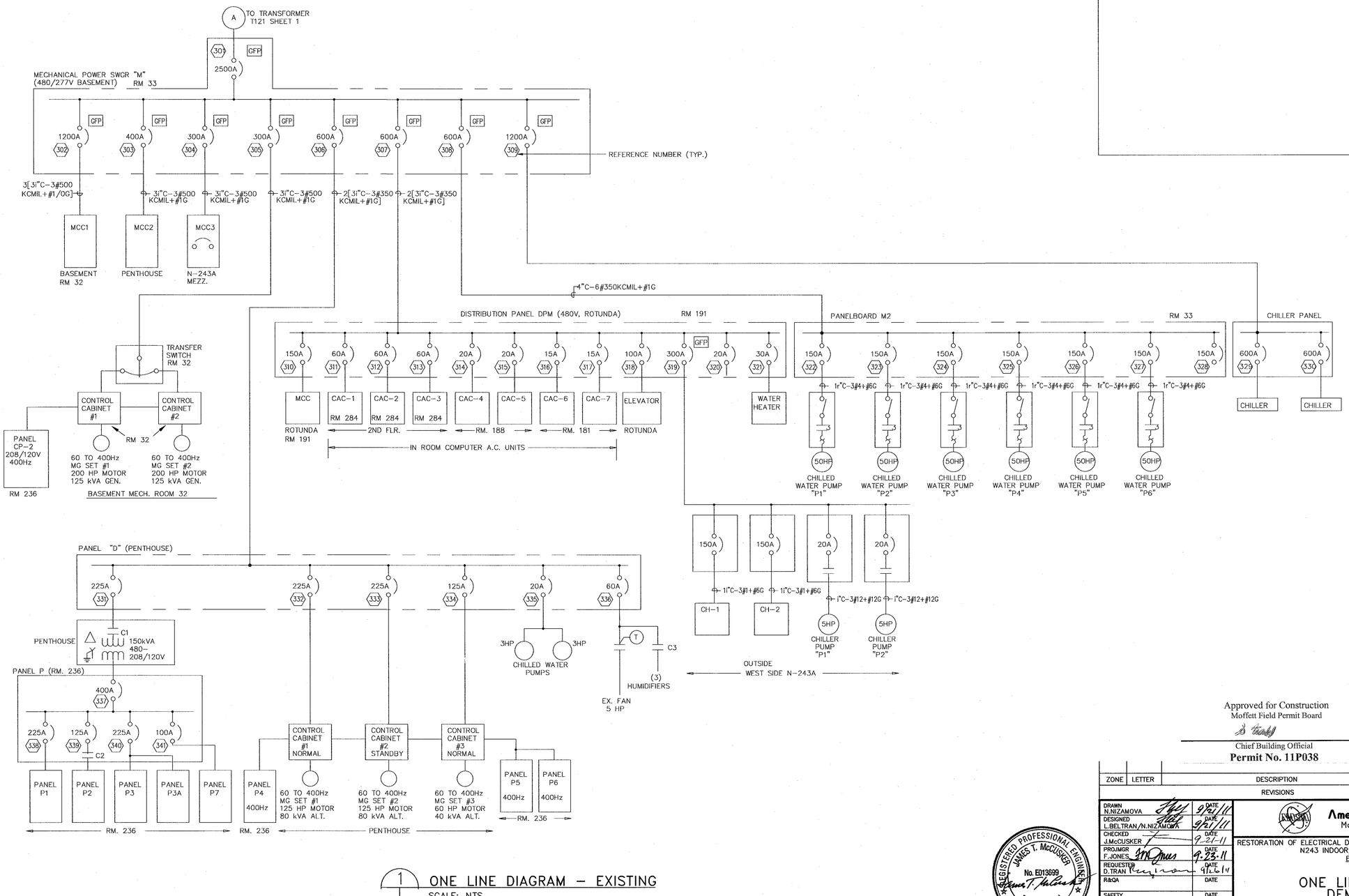

1 ONE LINE DIAGRAM – EXISTING
SCALE: NTS

Approved for Construction
Moffett Field Permit Board

Chief Building Official
Permit No. 11P038

ZONE	LETTER	DESCRIPTION	DRAWN	DATE	APPRVD

REVISIONS

DRAWN N.NIZAMOVA		DATE 9/21/11
DESIGNED L.BELTRAN/N.NIZAMOVA		DATE 9/21/11
CHECKED J.McCUSKER		DATE 9-21-11
PROJMGR F.JONES		DATE 9-23-11
REQUESTER D.TRAN		DATE 9/26/11
R&QA		DATE
SAFETY		DATE
SUPERVISOR S.FRANKEL		DATE OCT 21 2011

REGISTERED PROFESSIONAL ENGINEER JAMES T. McCUSKER No. E013699 ELECTRICAL STATE OF CALIFORNIA

Ames Research Center
Moffett Field, California

RESTORATION OF ELECTRICAL DISTRIBUTION SYSTEM–HIGH VOLTAGE WP1
N243 INDOOR/OUTDOOR SUBSTATION
ELECTRICAL

ONE LINE DIAGRAM DEMOLITION

SIZE	CAGE CODE	REV
D	25307	A 1---1001-E38
SCALE	NONE	INDEX SHEET 3 OF 3

FILE NAME: A1---1001-E038_3_R7.DWG 9-21-11

60176753.0001

DWG: \\N213FS2\Proj\REDS\60176753 (K10018)_REDS - High Voltage\500 CAD\REDS_HV-WP1\N243-Substation\E\Sheet\A1---1001-E038_3_RHV.DWG Version: 17.1s (LMS Tech) User: palden
DATE: Sep 20, 2011 - 5:26:24 pm

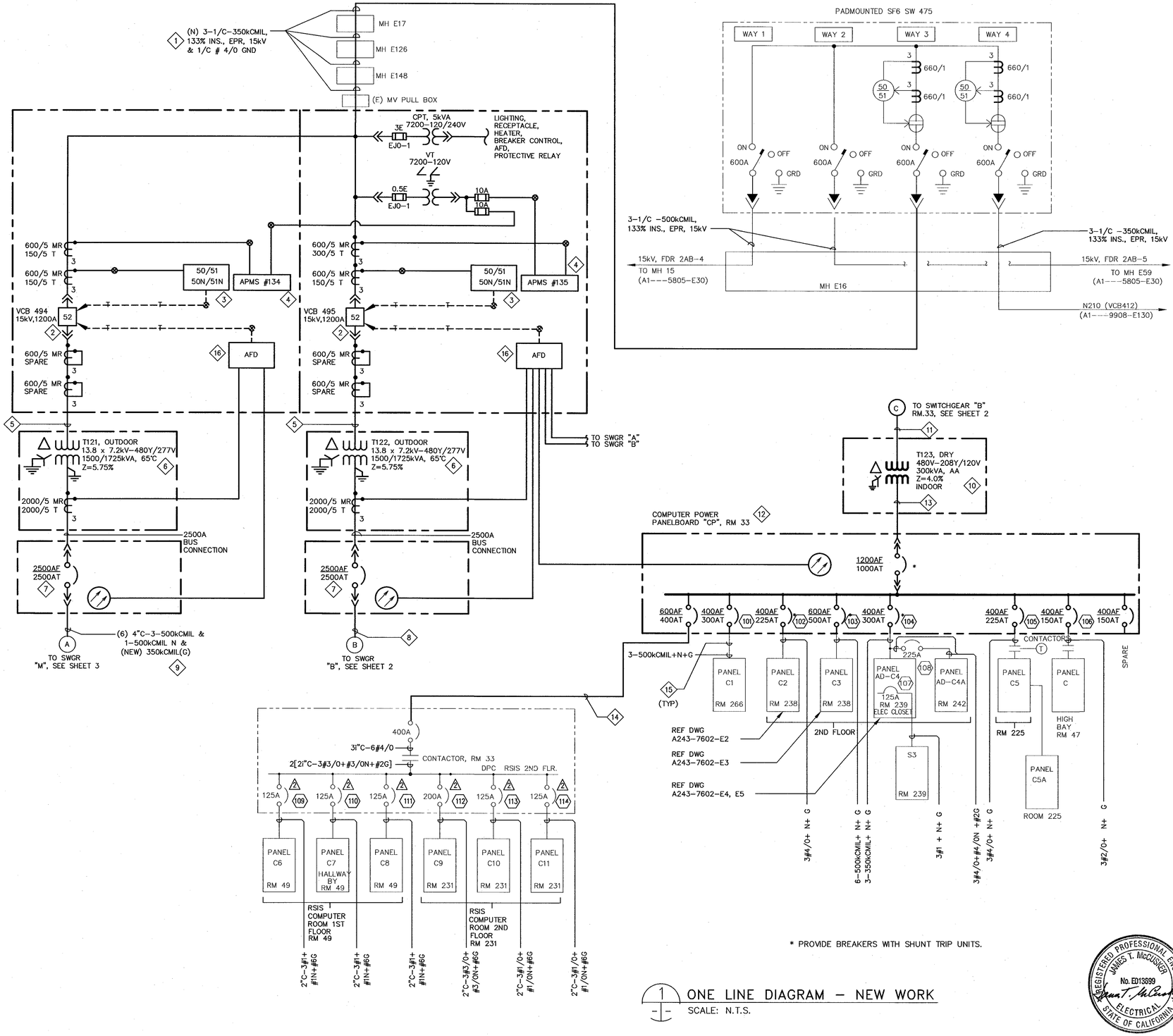

* PROVIDE BREAKERS WITH SHUNT TRIP UNITS.

1 ONE LINE DIAGRAM – NEW WORK
SCALE: N.T.S.

REGISTERED PROFESSIONAL ENGINEER JAMES T. McCUSKER No. EO13699 ELECTRICAL STATE OF CALIFORNIA

SHEET NOTES

1. FOR GENERAL NOTES, SYMBOLS AND ABBREVIATIONS, SEE DRAWING G4.
2. SINGLE LINE DIAGRAM IS BASED ON THE LATEST KNOWN EXISTING NASA DRAWING.
3. LIGHT LINES DENOTE EXISTING MATERIAL/ EQUIPMENT TO REMAIN.
4. ALL INDOOR EQUIPMENT TO BE RATED FOR USE IN NEMA 12 ENVIRONMENT, MINIMUM.
5. NOT ALL CONDUITS AND CONDUCTORS ARE SHOWN ON DWG.
6. DARK OR HEAVY LINES INDICATE NEW MATERIAL/EQUIPMENT TO BE PROVIDED. U.O.N.
7. THE DIAGRAMS ARE PROVIDED FOR GUIDANCE ONLY. THE CONTRACTOR SHALL FIELD VERIFY ALL EXISTING EQUIPMENT INCLUDING TERMINAL BLOCKS, TERMINAL IDENTIFICATION NUMBER, CONNECTIONS ETC. AND REVISE DRAWINGS AS NEEDED TO MATCH EXISTING AND NEW EQUIPMENT TO PROVIDE A COMPLETE FUNCTIONAL SYSTEM.
8. ALL CT WIRES SHALL BE #10 AWG MINIMUM, TYPE SIS. ALL VOLTAGE, CPT SECONDARY AND BREAKER TRIP WIRES SHALL BE #12 AWG MINIMUM, TYPE SIS. U.O.N.
9. CONTRACTOR SHALL FIELD VERIFY ALL EQUIPMENT RATING PRIOR TO ORDERING.
10. CPT AND VT'S SHALL BE DRAWOUT TYPE.
11. SEE DRAWING E45 SH 2 FOR THREE LINE DIAGRAM AND E46 SH2 FOR BREAKER CONTROL DIAGRAM.
12. SEE DRAWING E63 FOR NAMEPLATE SCHEDULE.

KEY NOTES

1. PROVIDE 15kV, 3-1/C-350kCMIL, 133% INSULATION, EPR CABLE & 1/C # 4/0 GND FROM SW475 TO VCB494/ VCB495 VIA (E) MV PULL BOX, MH E148, MH E126, MH E16 AND MH E17.
2. PROVIDE 15kV, 1200A SWITCHGEAR WITH (2) VACUUM CIRCUIT BREAKERS VCB494 & VCB495, CPT, VT AND ALL ACCESSORIES PER SPECIFICATION SECTION 26 13 00.00 20.
3. INSTALL GFE 3-PHASE MICROPROCESSOR BASED RELAY ALSTOM MICOM P124 COMPLETELY WIRED ON THE NEW SWITCHGEAR. INSTALLATION SHALL BE IN ACCORDANCE WITH DRAWINGS E64 & E68.
4. PROVIDE & INSTALL GFE 3-PHASE DIGITAL POWER METER, PML ION 7330 COMPLETELY WIRED ON THE NEW SWITCHGEAR. INSTALLATION SHALL BE IN ACCORDANCE WITH DRAWINGS E64 & 68.
5. PROVIDE 15kV, 3-1/C-350kCMIL, 133% INS., EPR CABLE AND 1/C # 4/0 GND FROM VCB494 TO OUTDOOR TRANSFORMER T121 AND FROM VCB495 TO OUTDOOR TRANSFORMER T122 RESPECTIVELY.
6. PROVIDE OUTDOOR LIQUID-FILLED TRANSFORMERS T121 AND T122 WITH DUAL RATED PRIMARY WINDING. LIQUID-FILLED TRANSFORMERS SHALL BE LESS FLAMMABLE PER NEC, VEGETABLE-BASED OIL TYPE WITH ALL ACCESSORIES PER SPECIFICATION SECTIONS 26 11 16 & 26 12 00.00 40.
7. PROVIDE OUTDOOR 480V SWITCHBOARD WITH 2500A DRAWOUT TYPE CIRCUIT BREAKER WITH GFP.
8. PROVIDE 6 SETS OF (4-750kCMIL & 350kCMIL GND) COMPACT CONDUCTORS, IN 6-4"C. PROVIDE ADEQUATE RACEWAY MOUNTING SUPPORT PER NEC.
9. PULL OUT (E) GROUND CONDUCTOR AND REPLACE WITH NEW 350kCMIL GND FOR EACH OF (E) (6) FEEDERS. REROUTE/EXTEND (E) RACEWAY/CONDUCTOR TO NEW SWITCHBOARD AND RECONNECT/RESTORE ORIGINAL FEEDER CIRCUITS.
10. PROVIDE INDOOR DRY TYPE TRANSFORMER (T123), ELECTROSTATIC SHIELDED, TOTALLY ENCLOSED, INCLUDING ALL ACCESSORIES PER SPECIFICATION SECTION 26 11 16 & 26 12 00.00 40.
11. PROVIDE (6-250kCMIL & #1 AWG GND) IN 4"C FROM 480V SWITCHBOARD TO TRANSFORMER T123.
12. PROVIDE 208Y/120V COMPUTER POWER PANELBOARD IN NEMA-1 ENCLOSURE.
13. PROVIDE 3 SETS OF (4-500kCMIL & #3/0 AWG GND) IN 3-4"C.
14. PROVIDE 2 SETS OF (4 #4/0 & #1 AWG GND) IN 2-2 1/2"C.
15. EXTEND (E) FEEDER RACEWAY/CONDUCTORS, SPLICE (E) CONDUCTORS AND PROVIDE JUNCTION BOX AS REQUIRED AND RECONNECT, REROUTE & RESTORE ORIGINAL CIRCUITS.
16. INSTALL ARC FLASH RELAY COMPLETELY WIRED INTO THE NEW SWITCHGEAR. INSTALLATION SHALL BE IN ACCORDANCE WITH MANUFACTURER'S RECOMENDATIONS.

NASA REFERENCE DRAWINGS

A1---6303-E0	BLDG INDEX, CROSS-REF, LEGEND & ABBR.
A1---5805-E30	SYSTEM A & B SINGLE LINE DIAGRAM
A1---6303-E14	BLDG N210 SINGLE LINE DIAGRAM
A243-6502-E2	BLDG N243 6.9KV SWITCHGEAR WIRING DIAGRAM
A243-6502-E3	BLDG N243 6.9KV SWITCHGEAR WIRING DIAGRAM
A243-6502-E5	BLDG N243 6.9KV SWITCHGEAR ELEM DIAGRAM
A243-6502-E6	BLDG N243 6.9KV SWITCHGEAR ELEM DIAGRAM
A343-8101-E2018	

Approved for Construction
Moffett Field Permit Board
Chief Building Official
Permit No. 11P038

ZONE	LETTER	DESCRIPTION	DRAWN	DATE	APPRVD
		REVISIONS			

DRAWN N.NIZAMOVA	DATE 9/8/11	Ames Research Center, Moffett Field, California
DESIGNED L.BELTRAN/N.NIZAMOVA	DATE 9/21/11	RESTORATION OF ELECTRICAL DISTRIBUTION SYSTEM-HIGH VOLTAGE WP1 N243 INDOOR/OUTDOOR SUBSTATION ELECTRICAL
CHECKED J.McCUSKER	DATE 9-21-11	ONE LINE DIAGRAM NEW WORK
PROJMGR F.JONES	DATE 9.23.11	
REQUESTER D.TRAN	DATE 9/26/11	
R&QA	DATE	
SAFETY	DATE	
SUPERVISOR S.FRANKEL	DATE OCT 27 2011	

SIZE D | CAGE CODE 25307 | DWG NO. A1---1001-E39 | REV A
SCALE NONE | INDEX SHEET 1 OF 3
FILE NAME: A1---1001-E039_1_RHV.DWG 9-21-11

60176753.0001

DWG: \\Kf13fs2\Proj\REDS\60176753 (K10018)_REDS - High Voltage\500 CAD\REDS_HV-WP1\W243-Substation\E\Sheet\A1---1001-E039_1_RHV.DWG Version: 17.1s (LMS Tech) User: pdden
DATE: Sep 20, 2011 - 5:26:29 pm

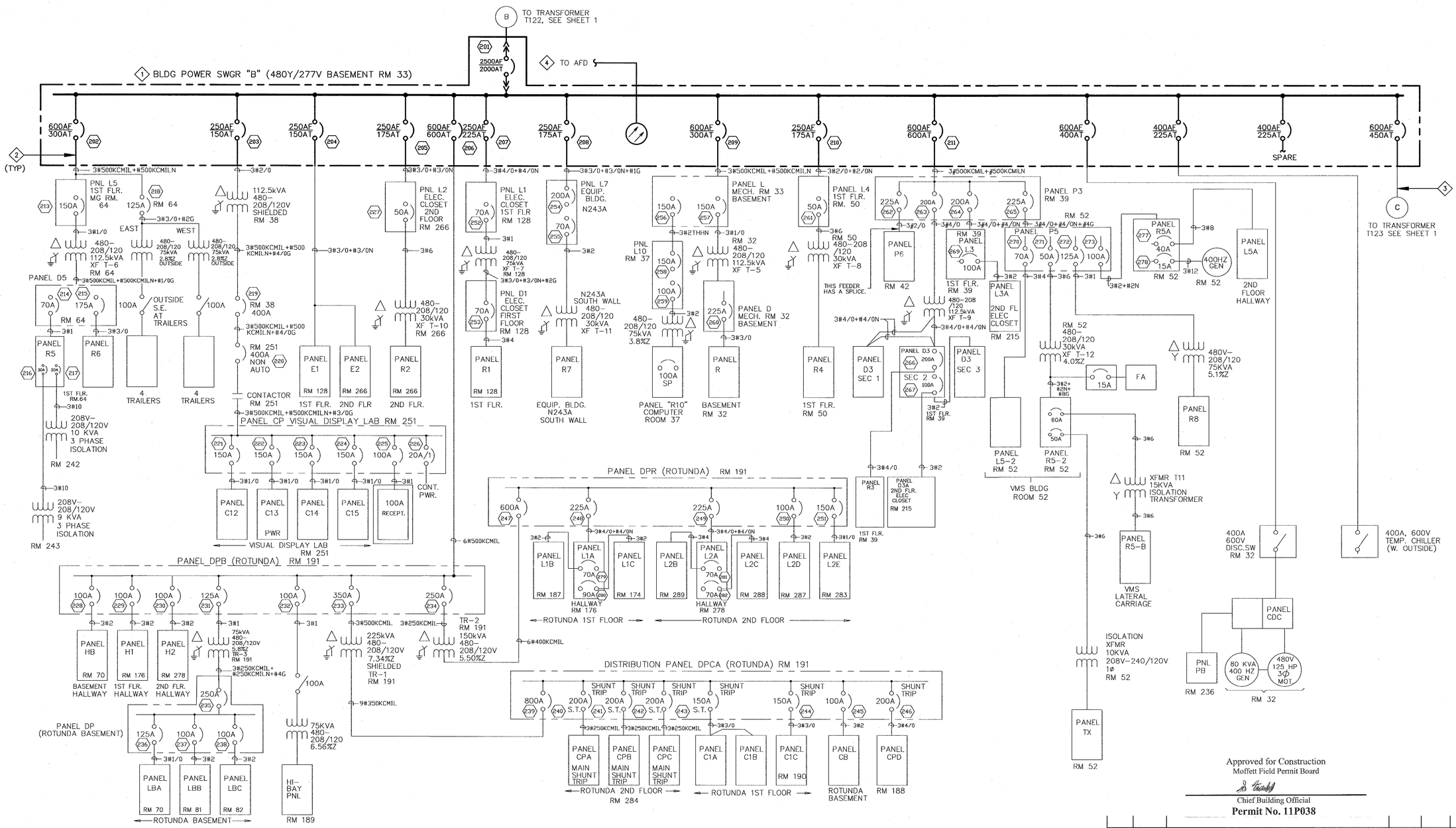

SHEET NOTES

1. FOR GENERAL NOTES, SYMBOLS AND ABBREVIATIONS, SEE DRAWING G4.
2. NOT ALL CONDUITS AND CONDUCTORS ARE SHOWN ON THE DRAWING.
3. SINGLE LINE DIAGRAMS ARE BASED ON THE LATEST KNOWN EXISTING DRAWINGS.
4. DARK OR HEAVY LINES INDICATE NEW MATERIAL/EQUIPMENT TO BE PROVIDED, UON.
5. CONTRACTOR SHALL FIELD VERIFY ALL EQUIPMENT RATINGS PRIOR TO ORDERING ANY MATERIAL.
6. SEE SHEET 1 FOR NOTES.

KEY NOTES

1. PROVIDE NEW 480V POWER SWITCHGEAR "B" IN NEMA–1 IN BASEMENT ELECTRICAL ROOM 33.
2. REROUTE/EXTEND (E) FEEDER RACEWAY/CONDUCTORS TO NEW SWITCHBOARD, SPLICE (E) CONDUCTORS AND PROVIDE NEW PULL BOX PER NEC AS REQUIRED AND RECONNECT/RESTORE ORIGINAL CIRCUITS.
3. PROVIDE NEW (6–250kCMIL AND 1/C # 1/0 AWG GND) IN 3"C FROM 480 SWITCHBOARD TO TRANSFORMER T123.
4. TO ARC FLASH RELAY. FOR CONTINUATION SEE KEYNOTE 16, DWG E39–1.

1 ONE LINE DIAGRAM – NEW WORK
SCALE: N.T.S.

REGISTERED PROFESSIONAL ENGINEER JAMES T. McCUSKER No. E013699 ELECTRICAL STATE OF CALIFORNIA

Approved for Construction
Moffett Field Permit Board
Chief Building Official
Permit No. 11P038

ZONE	LETTER	DESCRIPTION	DRAWN	DATE	APPRVD

REVISIONS

DRAWN N.NIZAMOVA	DATE 9/21/11	
DESIGNED L.BELTRAN/N.NIZAMOVA	DATE 9/21/11	
CHECKED J.McCUSKER	DATE 9-21-11	
PROJMGR F.JONES	DATE 9.23.11	
REQUESTER D.TRAN	DATE 9.21.11	
R&QA	DATE	
SAFETY	DATE	
SUPERVISOR S.MORROKSEY	DATE OCT 2011	
	DATE	

Ames Research Center
Moffett Field, California

RESTORATION OF ELECTRICAL DISTRIBUTION SYSTEM–HIGH VOLTAGE WP1
N243 INDOOR/OUTDOOR SUBSTATION
ELECTRICAL

ONE LINE DIAGRAM NEW WORK

SIZE	CAGE CODE	REV
D	25307	A 1---1001-E39
SCALE	NONE	INDEX SHEET 2 OF 3

FILE NAME: A1---1001-E039_2_RHV.DWG 9-21-11

60176753.0001

DWG: \\N21JFS2\Proj\REDS\60176753 (X1D01B)_REDS – High Voltage\500 CAD\REDS_HV-WP1\N243-Substation\E\Sheet\A1---1001-E039_2_RHV.DWG Version: 17.1s (LMS Tech) User: pdden
DATE: Sep 20, 2011 – 5:26:34 pm

DWG NO. A1---1001-E39 | SH. 3 | REV

SHEET NOTES

1. EXCEPT AS NOTED, THIS DRAWING IS FOR REFERENCE USE ONLY, (N.I.C).

KEY NOTES

1. TO ARC FLASH RELAY. FOR CONTINUATION SEE KEYNOTE 16, DWG E39-1.

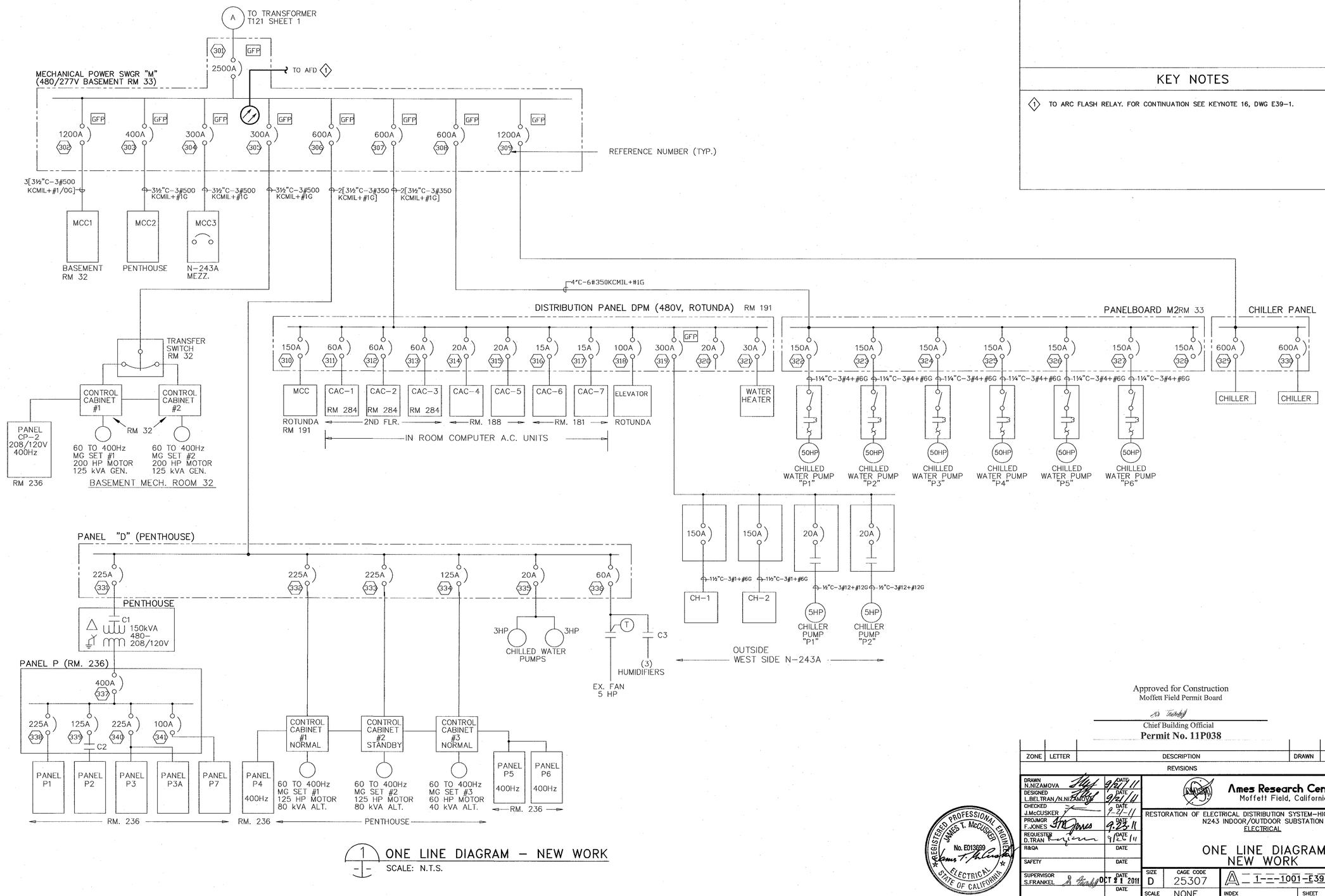

1 ONE LINE DIAGRAM – NEW WORK
SCALE: N.T.S.

Approved for Construction
Moffett Field Permit Board
Chief Building Official
Permit No. 11P038

ZONE	LETTER	DESCRIPTION	DRAWN	DATE	APPRVD
REVISIONS					

DRAWN N.NIZAMOVA	DATE 9/21/11	Ames Research Center, Moffett Field, California
DESIGNED L.BELTRAN/N.NIZAMOVA	DATE 9/21/11	RESTORATION OF ELECTRICAL DISTRIBUTION SYSTEM-HIGH VOLTAGE WP1 N243 INDOOR/OUTDOOR SUBSTATION ELECTRICAL
CHECKED J.McCUSKER	DATE 9-21-11	ONE LINE DIAGRAM NEW WORK
PROJMGR F.JONES	DATE 9.23.11	
REQUESTER D.TRAN	DATE 9/20/11	
R&QA	DATE	
SAFETY	DATE	
SUPERVISOR S.FRANKEL	DATE OCT 21 2011	SIZE D; CAGE CODE 25307; SCALE NONE; DWG A1---1001-E39; REV 1; INDEX; SHEET 3 OF 3

REGISTERED PROFESSIONAL ENGINEER JAMES T. McCUSKER No. E013699 ELECTRICAL STATE OF CALIFORNIA

FILE NAME: A1---1001-E039_3_RHV.DWG 9-21-11

60176753.0001

DWG: \\N213FS2\Proj\RE(ES)\60176753 (K10018)_RE(ES) - High Voltage\500 CAD\RE(ES)_HV-WP1\N243-Substation\E\Sheet\A1---1001-E039_3_RHV.DWG Version: 17.1s (LMS Tech)
DATE: Sep 20, 2011 - 3:26:42 pm User: pdden

DWG NO.	SH.	REV
A1---1001-E40	1	

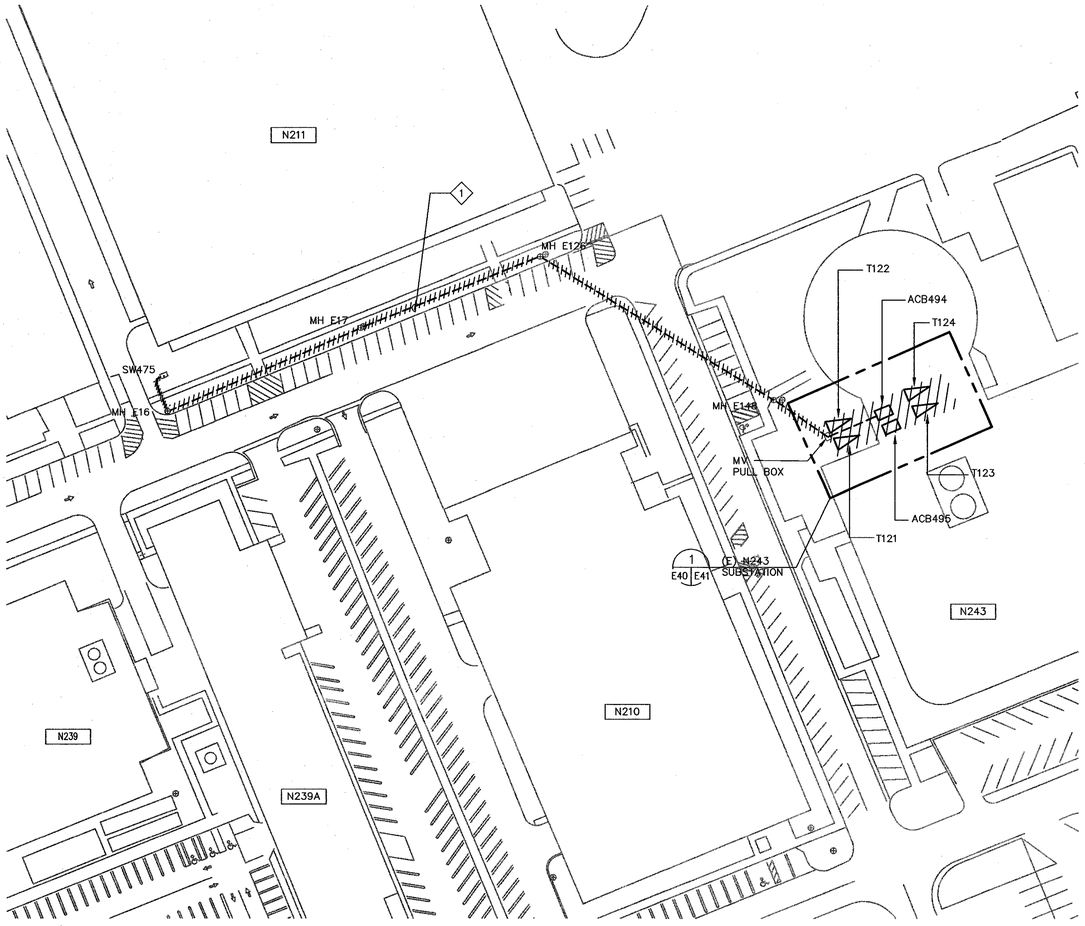

1 E40 E41 SITE PLAN – DEMOLITION
SCALE: 1"=50'

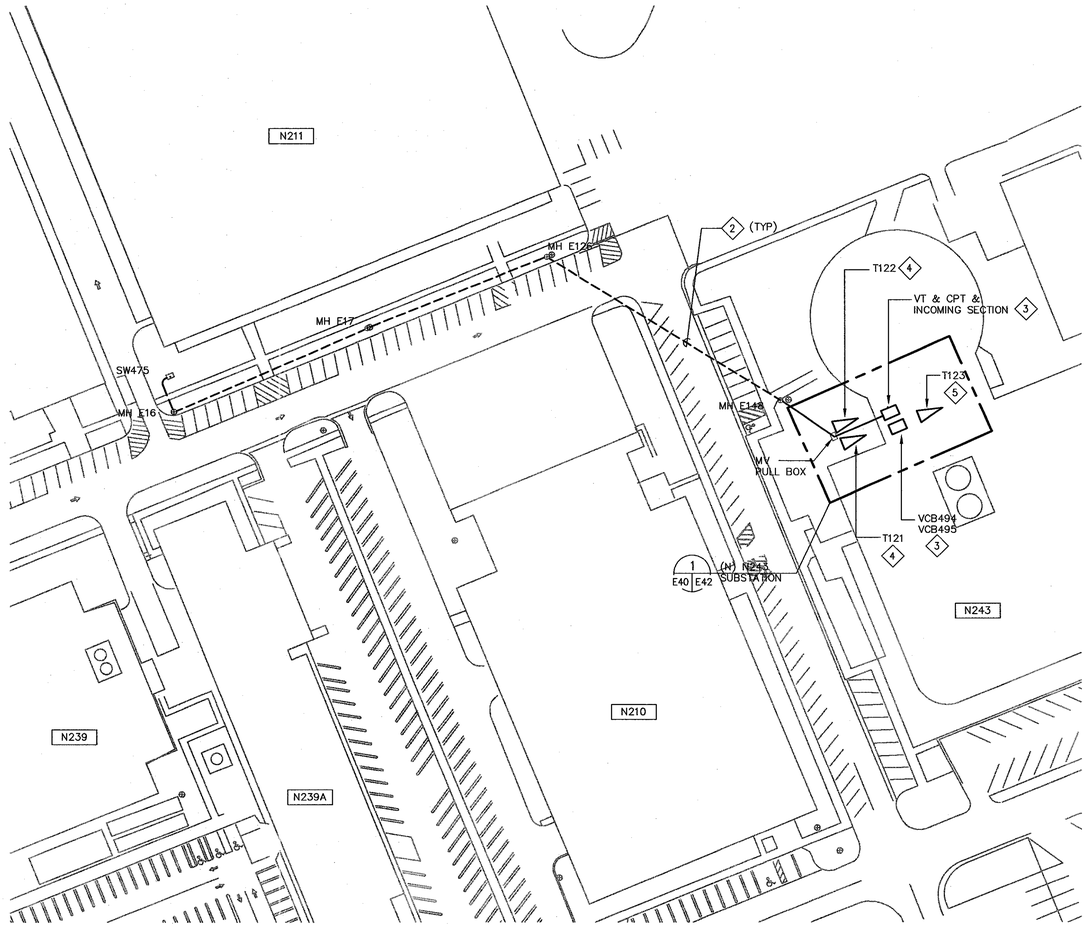

2 E40 E42 SITE PLAN – NEW WORK
SCALE: 1"=50'

SHEET NOTES

1. FOR GENERAL NOTES, SYMBOLS AND ABBREVIATIONS, SEE DRAWING G4.
2. HATCHED LINES INDICATE EXISTING MATERIAL/EQUIPMENT TO BE DEMOLISHED AND REMOVED U.O.N.
3. CONTRACTOR SHALL FIELD VERIFY ALL MEASUREMENTS AT THE SITE AND SHALL BE RESPONSIBLE FOR THEIR ACCURACY PRIOR TO STARTING ANY WORK OR ORDERING ANY MATERIAL.

KEY NOTES

1. DISCONNECT & REMOVE EXISTING CABLES FROM SW475 TO ACB494/ ACB495. EXISTING UNDERGROUND DUCTS TO REMAIN AND TO BE RE-USED IN NEW WORK. SEE DRAWING E38 FOR ONE LINE DIAGRAM AND DRAWING E41 FOR EQUIPMENT PLAN.
2. PROVIDE NEW 15KV, 3-1/C 350kCMIL, 133% INS., EPR CABLE AND 1/C # 4/0 GND FROM SW475 TO VCB494/VCB495 VIA (E) PULL BOX, MH E148, MH E126, MH E17 & MH E16. SEE DRAWING E39 FOR ONE LINE DIAGRAM AND DRAWING E42 FOR EQUIPMENT PLAN.
3. PROVIDE 15kV, 1200A, 500kVA SWITCHGEAR WITH (2) TANDEM MOUNTED VACUUM CIRCUIT BREAKERS VCB494 & VCB495, CPT, VT AND ALL ACCESSORIES PER SPECIFICATION SECTION 26 13 00.00 20.
4. PROVIDE OUTDOOR LIQUID-FILLED TRANSFORMERS T121 AND T122 WITH DUAL RATED PRIMARY WINDING. LIQUID-FILLED TRANSFORMERS SHALL BE LESS FLAMMABLE PER NEC, VEGETABLE-BASED OIL TYPE WITH ALL ACCESSORIES PER SPECIFICATION SECTIONS 26 12 00.00 40 & 26 11 16.
5. PROVIDE INDOOR DRY TYPE TRANSFORMER (T123), ELECTROSTATIC SHIELDED, K-RATED, TOTALLY ENCLOSED, INCLUDING ALL ACCESSORIES PER SPECIFICATION SECTION 26 11 16.

REGISTERED PROFESSIONAL ENGINEER JAMES T. McCUSKER No. E013699 ELECTRICAL STATE OF CALIFORNIA

1"=50'-0" 0 25 50 100 150

Approved for Construction
Moffett Field Permit Board
Chief Building Official
Permit No. 11P038

ZONE	LETTER	DESCRIPTION	DRAWN	DATE	APPRVD

REVISIONS

DRAWN N.NIZAMOVA	DATE 9/21/11	
DESIGNED L.BELTRAN/N.NIZAMOVA	DATE 9/21/11	
CHECKED J.McCUSKER	DATE 9-21-11	
PROJMGR F.JONES	DATE 9.23.11	
REQUESTER D.TRAN	DATE 9/22/11	
R&QA	DATE	
SAFETY	DATE	
SUPERVISOR S.FRANKEL	DATE OCT 21 2011	
	DATE	

Ames Research Center
Moffett Field, California

RESTORATION OF ELECTRICAL DISTRIBUTION SYSTEM-HIGH VOLTAGE WP1
N243 INDOOR/OUTDOOR SUBSTATION
ELECTRICAL

SITE PLANS DEMOLITION & NEW WORK

SIZE	CAGE CODE	REV
D	25307	A
SCALE AS SHOWN	INDEX SHEET 1 OF 1	

FILE NAME: A1---1001-E040_1_R7.DWG 9-21-11

60176753.0001

DWG: \\X21SF52\Proj\RESS\60176753 (K10016)_RESS - High Voltage\300 CAD\RESS_HV-WP1\N243-Substation\E\Sheet\A1---1001-E040_1_R4V.DWG Version: 17.1s (LMS Tech) User: polden
DATE: Sep 20, 2011 - 5:26:53 pm

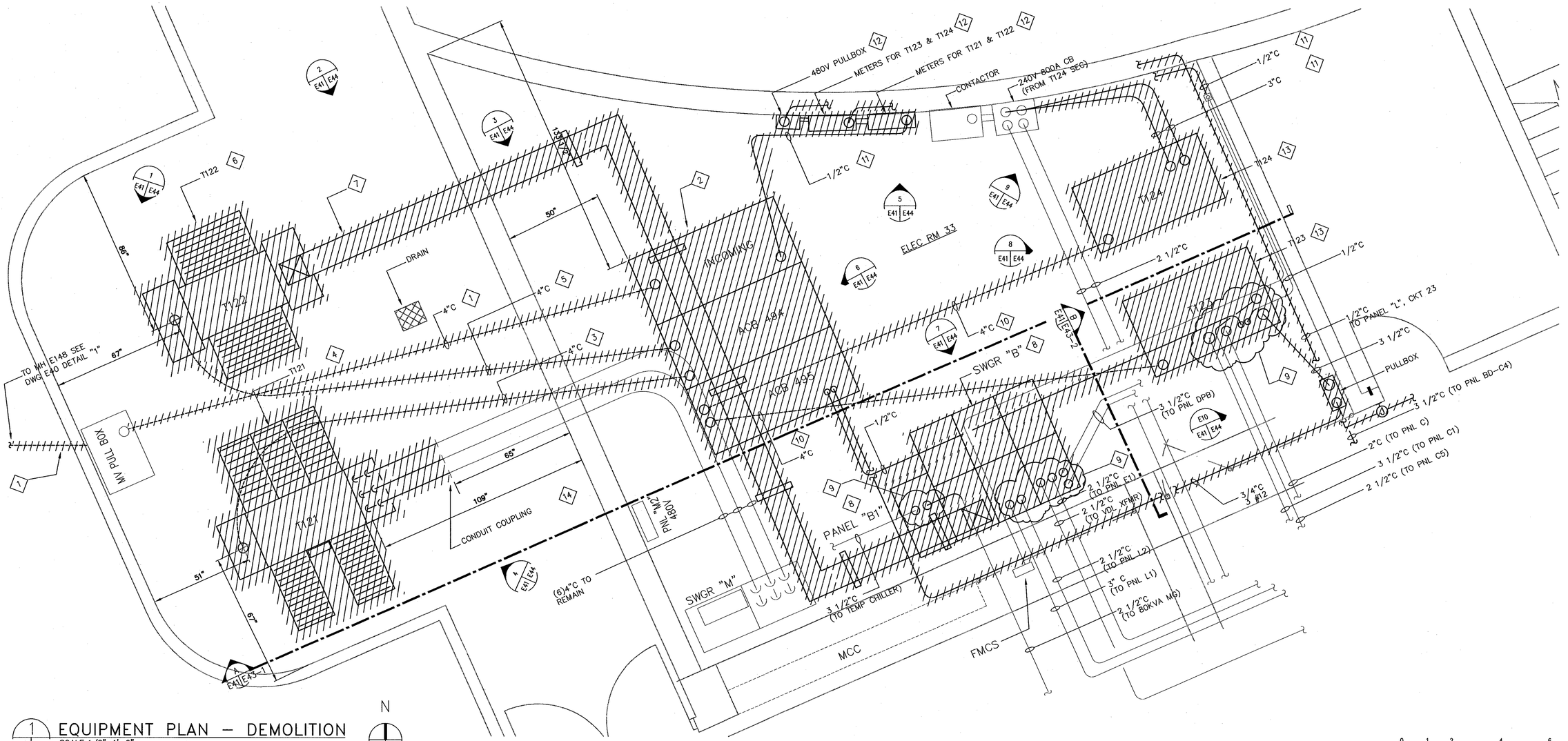

1 E40 | E41 EQUIPMENT PLAN – DEMOLITION
SCALE: 1/2"=1'-0"

1/2"=1' 0 1 2 4 6

SHEET NOTES

1. FOR GENERAL NOTES, SYMBOLS AND ABBREVIATIONS, SEE DRAWING G4.
2. HATCHED LINES INDICATE EXISTING MATERIAL/EQUIPMENT TO BE DEMOLISHED AND REMOVED U.O.N.
3. (E) INDOOR ACB494/ACB495 SWITCHGEAR, LOW VOLTAGE DISTRIBUTION PANELS OUTDOOR TRANSFORMERS T121 AND T122 AND INDOOR TRANSFORMERS T123 & T124 SHALL BE REMOVED. CONTRACTOR SHALL FIELD VERIFY ALL MEASUREMENTS AT THE SITE AND SHALL BE RESPONSIBLE FOR THEIR ACCURACY PRIOR TO STARTING ANY WORK OR ORDERING ANY MATERIAL. PROVIDE NEW VACUUM CIRCUIT BREAKERS SWITCHGEAR, TRANSFORMERS, AND SWITCHBOARDS TO FIT IN THE EXISTING AVAILABLE SPACE.
4. ALL EXISTING CONDUITS AND CONDUCTORS SHALL BE DISCONNECTED FROM (E) EQUIPMENT AND RECONNECTED TO NEW EQUIPMENT, CONTRACTOR SHALL DETERMINE IN FIELD AND PROVIDE PULL BOXES AND RELOCATE/EXTEND OR REPLACE (E) CONDUITS AND CONDUCTORS (MATCH EXISTING SIZE) TO COMPLETE CONNECTIONS TO NEW AND EXISTING EQUIPMENT.
5. NOT ALL CONDUITS AND CONDUCTORS ARE SHOWN ON THE DRAWINGS.
6. EXISTING GROUNDING TO REMAIN FOR RECONNECTION IN NEW WORK.
   PRIOR TO SHUTDOWN AND DEMOLITION WORK, CONTRACTOR SHALL PERFORM PHASE SEQUENCE TEST ON EXISTING SYSTEM/EQUIPMENT IN THE PRESENCE OF COTR.

KEY NOTES

1. DISCONNECT AND REMOVE (E) INCOMING CABLE FROM SW475 TO ACB 494/495 VIA (E) MV PULLBOX, MHE148, MHE126, MHE17, MHE16. FOR ONE LINE DIAGRAM SEE DRAWING E38. REFER TO DWGS E47–E50 FOR MANHOLE DETAILS.
2. REMOVE (E) ACB494 AND ACB495 SWITCHGEAR.
3. REMOVE (E) MV FEEDER CABLES BETWEEN ACB494 AND TRANSFORMER T121. (E) CONDUIT TO BE RE–USED IN NEW WORK.
4. REMOVE (E) OUTDOOR TRANSFORMER T121 AND ALL ASSOCIATED EQUIPMENT AND DEVICES.
5. REMOVE (E) MV FEEDER CABLES BETWEEN ACB494 AND TRANSFORMER T122. (E) CONDUIT TO BE RE–USED IN NEW WORK.
6. REMOVE (E) OUTDOOR TRANSFORMERS T122 AND ALL ASSOCIATED EQUIPMENT AND DEVICES.
7. DISCONNECT AND REMOVE (E) CABLES AND WIREWAY FEEDER RUN ALL THE WAY BACK FROM T122 TO (E) SWITCHGEAR "B" AND SWITCHBOARD "B1".

KEY NOTES (CON'T)

8. DISCONNECT AND REMOVE (E) 480Y/277V SWITCHGEAR "B" AND 480Y/277V SWITCHBOARD "B1".
9. DISCONNECT (E) BRANCH FEEDER CIRCUIT CABLES AND RE–CONNECT TO NEW SWITCHBOARD OR PANELBOARD, SEE DRAWING E42.
10. REMOVE (E) MV FEEDER CABLES BETWEEN ACB495 AND INDOOR TRANSFORMERS T123 AND T124. CUT AND CAP (E) CONDUIT STUB–UP.
11. DISCONNECT AND REMOVE (E) CABLES AND CONDUITS.
12. DISCONNECT AND REMOVE (E) METERS INCLUDING PULL BOX AND CABLE/CONDUIT CONNECTIONS ALL THE WAY FROM ACB494/ACB495 SWITCHGEAR AND UP TO THE SOURCE PANELBOARD "L", CKT 23, LOCATED IN MECHANICAL ROOM 32.
13. REMOVE (E) INDOOR TRANSFORMER T123 & T124 AND ALL ASSOCIATED EQUIPMENT AND DEVICES.
14. REMOVE (E) CONDUIT UP TO (E) COUPLING AS SHOWN, TO BE RECONNECTED TO NEW CONDUIT FOR BOTH TRANSFORMER T121 & T122, SEE DETAIL "C" DRAWING E43–2.

REGISTERED PROFESSIONAL ENGINEER JAMES T. McCUSKER No. E013699 ELECTRICAL STATE OF CALIFORNIA

Approved for Construction
Moffett Field Permit Board
Chief Building Official
Permit No. 11P038

ZONE	LETTER	DESCRIPTION	DRAWN	DATE	APPRVD

REVISIONS

DRAWN N.NIZAMOVA	DATE 9/21/11	
DESIGNED L.BELTRAN/N.NIZAMOVA	DATE 9/21/11	
CHECKED J.McCUSKER	DATE 9-21-11	
PROJMGR F.JONES	DATE 9.23.11	
REQUESTER D.TRAN	DATE 9.26.11	
R&QA	DATE	
SAFETY	DATE	
SUPERVISOR S.FRANKEL	DATE OCT 21 2011	

Ames Research Center
Moffett Field, California

RESTORATION OF ELECTRICAL DISTRIBUTION SYSTEM–HIGH VOLTAGE WP1
N243 INDOOR/OUTDOOR SUBSTATION
ELECTRICAL

EQUIPMENT PLAN
DEMOLITION

SIZE	CAGE CODE	DWG NO.	REV
D	25307	A1---1001-E41	
SCALE AS SHOWN		INDEX SHEET 1 OF 1	

FILE NAME: A1---1001-E041_1_R7.DWG 9-21-11

60176753.0001

DWG: \\N243FS01\Proj\REDS\60176753 (K10018)_RED5 - High Voltage\500 CAD\RED5_HV-WP1\N243-Substation\E\Sheet\A1---1001-E041_1_R#.DWG Version: 17.1s (LMS Tech) User: pdden
DATE: Sep 20, 2011 - 2:26:59 pm

DWG NO.	SH.	REV
A1---1001-E42	1	

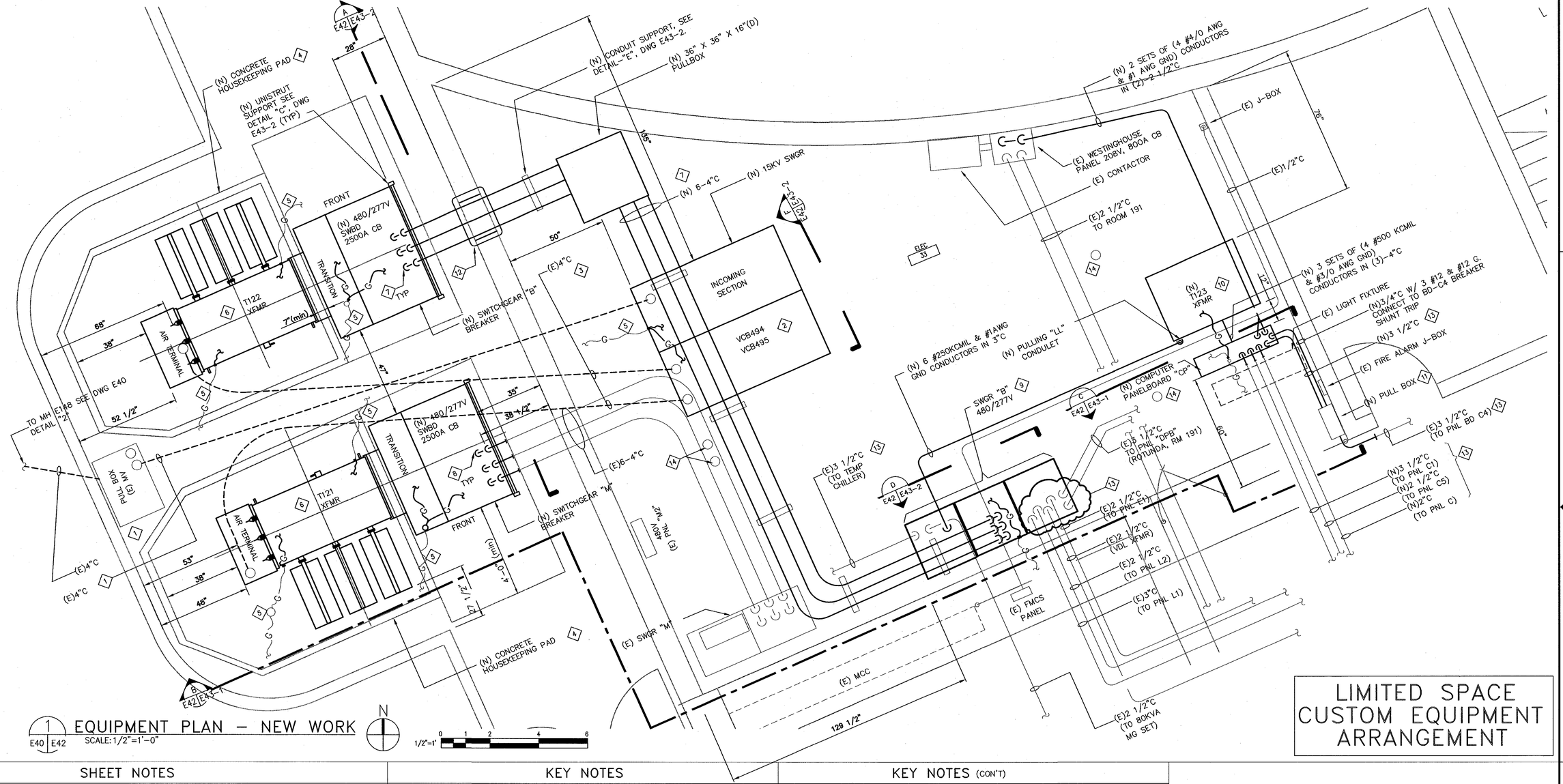

1 EQUIPMENT PLAN – NEW WORK
E40 E42 SCALE: 1/2"=1'-0"

N

1/2"=1' 0 1 2 4 6

LIMITED SPACE CUSTOM EQUIPMENT ARRANGEMENT

SHEET NOTES

1. FOR GENERAL NOTES, SYMBOLS AND ABBREVIATIONS, SEE DRAWING G4.
2. HEAVY LINES INDICATE NEW MATERIAL/EQUIPMENT TO BE PROVIDED. LIGHT LINES DENOTE EXISTING CONDITIONS, MATERIALS AND EQUIPMENT TO REMAIN.
3. CONTRACTOR SHALL FIELD VERIFY ALL MEASUREMENTS AT THE SITE AND SHALL BE RESPONSIBLE FOR THEIR ACCURACY PRIOR TO STARTING ANY WORK OR ORDERING ANY MATERIAL.
4. ALL OUTDOOR EQUIPMENT SHALL BE NEMA 3R.
5. ALL EXISTING CONDUITS AND CONDUCTORS SHALL BE RECONNECTED TO NEW EQUIPMENT. CONTRACTOR SHALL DETERMINE IN THE FIELD AND PROVIDE PULL BOXES AND RELOCATE, EXTEND OR REPLACE (E) CONDUIT AND CONDUCTORS (MATCH EXISTING SIZE) TO COMPLETE CONNECTIONS TO NEW AND EXISTING EQUIPMENT.
6. DIMENSION SHOWN ARE FOR GUIDANCE ONLY. CONTRACTOR SHALL VERIFY CONDUIT STUB-UP & EQUIPMENT DIMENSIONS BEFORE INSTALLATION.
7. ELECTRICAL EQUIPMENT AND FEEDERS SHALL BE SUPPORTED AND/OR ANCHORED IN ACCORDANCE WITH CALIFORNIA BUILDING CODE SEISMIC REQUIREMENTS.
8. EXTEND AND RECONNECT GROUNDING OF NEW EQUIPMENT TO THE (E) GROUND GRID VIA # 4/0 AWG BCW.

KEY NOTES

1. PROVIDE NEW 15kV, 3-1/C #350kCMIL, 133% INS., EPR CABLE & 1/C #4/0 GND FROM SW475 TO VCB494/495 VIA (E) MV PULL BOX, MHE148, MHE126, MHE16 & MHE17. SEE DWG E39 FOR ONE LINE DIAGRAM AND DRAWINGS E47-E50 FOR MANHOLE DETAILS.
2. PROVIDE NEW 15kV, 1200A W/ (2) VACUUM CIRCUIT BREAKERS, VCB494 AND VCB495 SWITCHGEAR, INCLUDING INCOMING LINE SECTION W/ CPT, VT AND ALL ACCESSORIES PER SPECIFICATION SECTION 26 13 00. 00 20. SEE DETAIL D, DWG E55-2.
3. PROVIDE/PULL NEW 15kV, 3-1/C 350kCMIL, 133% INS., EPR CABLE & 1/C #4/0 GND FROM LOAD SIDE OF VCB494 TO OUTDOOR TRANSFORMER T121 AND FROM VCB495 TO OUTDOOR TRANSFORMER T122 VIA (E) 4"C RESPECTIVELY.
4. SEE STRUCTURAL DRAWINGS FOR (N) CONCRETE PAD DETAILS.
5. PROVIDE NEW #4/0 AWG BCW GROUND CONDUCTOR FROM EXISTING GROUND GRID CONDUCTOR TO THE NEW EQUIPMENT. SEE CONSTRUCTION SPECIFICATIONS SECTION 26 11 16 AND DETAILS ON DWG E66.
6. PROVIDE NEW OUTDOOR LIQUID-FILLED TRANSFORMERS T121 &T122 INCLUDING ALL ACCESSORIES. LIQUID-FILLED TRANSFORMERS SHALL BE LESS FLAMMABLE PER NEC, VEGETABLE BASED OIL TYPE PER SPECIFICATION SECTIONS 26 12 00. 00 40 & 26 11 16.
7. PROVIDE (N) 6 SETS OF (4-750kCMIL & 350kCMIL GND) COMPACT CONDUCTORS, IN (N)(6)-4"C. PROVIDE ADEQUATE MOUNTING SUPPORT PER CEC.
8. EXTEND EXISTING CONDUIT TO NEW EQUIPMENT AND RECONNECT (E) CONDUCTOR TO NEW 480V 2500A CIRCUIT BREAKER. PROVIDE ADEQUATE SUPPORT AS REQUIRED.

KEY NOTES (CON'T)

9. PROVIDE NEW 480Y/277V SWGR "B" WITH MOLDED CASE BREAKERS, FRONT ACCESSIBLE, FLOOR MOUNTED, NEMA-1 ENCLOSURE IN ELECTRICAL ROOM 33.
10. PROVIDE NEW INDOOR DRY TYPE, TOTALLY ENCLOSED, ELECTROSTATIC SHIELDED AND K-13 RATED TRANSFORMER T123 PER SPECIFICATION SECTION 26 11 16. PROVIDE NEW 1 #3/0 AWG GEC CONNECTION TO EXISTING GROUND GRID, SEE DETAILS ON DWG. E66.
11. PROVIDE NEW 30" X 30" X 12" DEPTH PULL BOX, WALL MOUNTED.
12. CORE DRILL THROUGH CONCRETE WALL. PATCH AND PROVIDE SUITABLE WEATHERPROOF AND FIRESTOP SEALING ON CONDUIT PENETRATION AND (E) WALL OPENING.
13. INTERCEPT (E) FEEDER CONDUITS, PROVIDE NEW PULLBOX PER NEC, AS REQUIRED. EXTEND CONDUIT AND CONDUCTORS TO MATCH SAME SIZE TO THE NEW SWITCHBOARD AND PANELBOARD. PROVIDE ADEQUATE SUPPORTS.
14. TRIM AND CAP (E) CONDUIT STUB-UPS.

REGISTERED PROFESSIONAL ENGINEER JAMES T. McCUSKER No. E013699 ELECTRICAL STATE OF CALIFORNIA

Approved for Construction
Moffett Field Permit Board
Chief Building Official
Permit No. 11P038

ZONE	LETTER	DESCRIPTION	DRAWN	DATE	APPRVD
		REVISIONS			

DRAWN N.NIZAMOVA		9/21/11
DESIGNED L.BELTRAN/N.NIZAMOVA		9/21/11
CHECKED J.McCUSKER		9-21-11
PROJMGR F.JONES		9.23.11
REQUESTER D.TRAN		9/21/11
R&QA		DATE
SAFETY		DATE
SUPERVISOR S.FRANKEL	OCT 31 2011	DATE

Ames Research Center
Moffett Field, California

RESTORATION OF ELECTRICAL DISTRIBUTION SYSTEM-HIGH VOLTAGE WP1
N243 INDOOR/OUTDOOR SUBSTATION
ELECTRICAL

EQUIPMENT PLAN
NEW WORK

SIZE	CAGE CODE	REV
D	25307	A
SCALE	AS NOTED	INDEX SHEET 1 OF 1

FILE NAME: A1---1001-E042_1_R7.DWG 9-21-11

601767530001

DWG: \\N213FS2\Proj\REDS\60176753 (410018)_REDS - High Voltage\300 CAD\REDS_HV-WP1\N243-Substation\E\Sheet\A1----1001-E042_1_RHV.DWG Version: 17.1s (LMS Tech) User: polden
DATE: Sep 20, 2011 - 5:27:04 pm

SHEET NOTES

1. FOR GENERAL NOTES, SYMBOLS AND ABBREVIATIONS, SEE DRAWING G4.
2. DARK OR HEAVY LINES INDICATE NEW MATERIAL/EQUIPMENT TO BE PROVIDED. LIGHT LINES INDICATE EXISTING CONDITION, UON.
3. CONTRACTOR SHALL FIELD VERIFY ALL MEASUREMENTS AT THE SITE AND SHALL BE RESPONSIBLE FOR THEIR ACCURACY PRIOR TO STARTING ANY WORK OR ORDERING ANY MATERIAL.
4. ALL OUTDOOR EQUIPMENT SHALL BE RATED FOR NEMA-3R ENVIRONMENT.
5. ALL EXISTING CONDUIT & CONDUCTORS AFFECTED SHALL BE DISCONNECTED FROM (E) EQUIPMENT AND RECONNECTED TO THE (N) EQUIPMENT. CONTRACTOR SHALL DETERMINE IN FIELD AND SHALL PROVIDE PULL BOXES AND RELOCATE, EXTEND OR REPLACE (E) CONDUIT AND CONDUCTORS (MATCH EXISTING) TO COMPLETE CONNECTIONS TO NEW AND EXISTING EQUIPMENT.
6. ELECTRICAL EQUIPMENT AND FEEDERS SHALL BE SUPPORTED AND/OR ANCHORED IN ACCORDANCE WITH UNIFORM BUILDING CODE ZONE 4 SEISMIC REQUIREMENTS.

KEY NOTES

1. PROVIDE NEW 15KV 1200A W/ (2) VACUUM CIRCUIT BREAKERS SWITCHGEAR VCB494/ VCB495 INCLUDING CPT, VT & ALL ACCESSORIES PER SPECIFICATION SECTION 26 13 00.00 20.
2. SEE STRUCTURAL DRAWINGS FOR CONCRETE PAD DETAILS.
3. EXTEND EXISTING CONDUIT TO NEW EQUIPMENT AND RECONNECT (E) CONDUCTORS TO NEW 480V, 2500A CIRCUIT BREAKER. PROVIDE ADEQUATE SUPPORTS AS REQUIRED.
4. PROVIDE NEW 480Y/277V SWITCHBOARD "B" WITH MOLDED CASE CIRCUIT BREAKERS, FRONT ACCESSIBLE, FLOOR MOUNTED, NEMA-1 ENCLOSURE IN ELECTRICAL ROOM 33.
5. CORE DRILL THROUGH CONCRETE WALL AND PROVIDE WEATHERPROOF AND FIRESTOP SEALING ON CONDUIT PENETRATION.
6. PATCH EXISTING WALL OPENING BEYOND AFTER REMOVAL OF WIREWAY/FEEDER AND PROVIDE SUITABLE WEATHER-STRIP AND FIRESTOP SEALANT.
7. EXTEND GROUND TO (N) PANELBOARD CP AND TRANSFORMER T123.
8. DISCONNECT & PULL BACK (E) CIRCUIT WIRING AND RECONNECT IN (N) PANELBOARD.

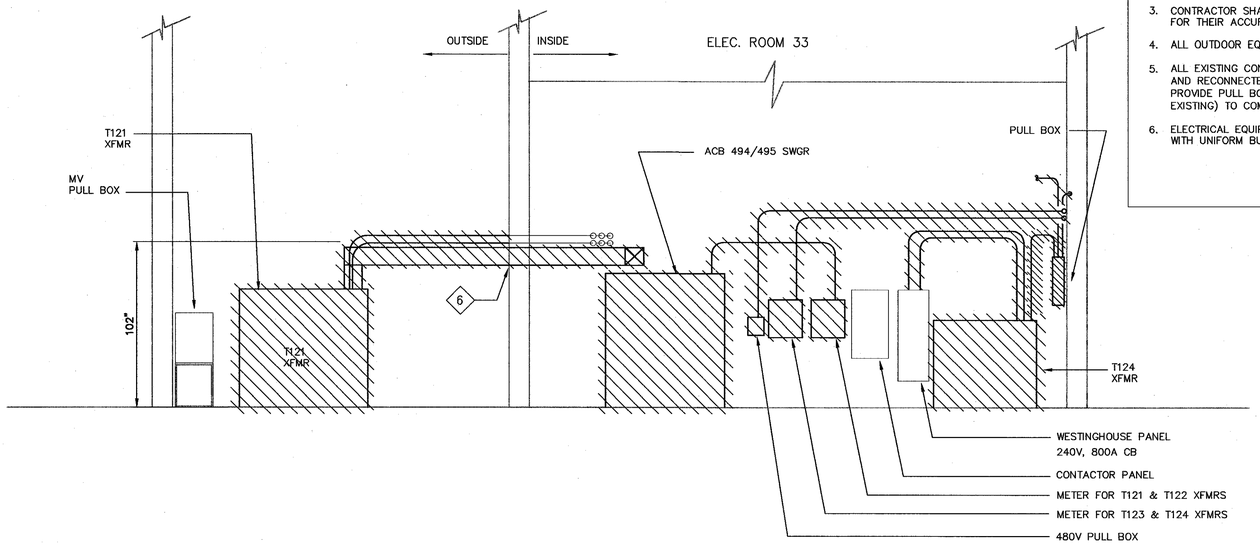

A E41 | E43-1 ELEVATION – DEMOLITION
SCALE: 1/4"=1'-0"

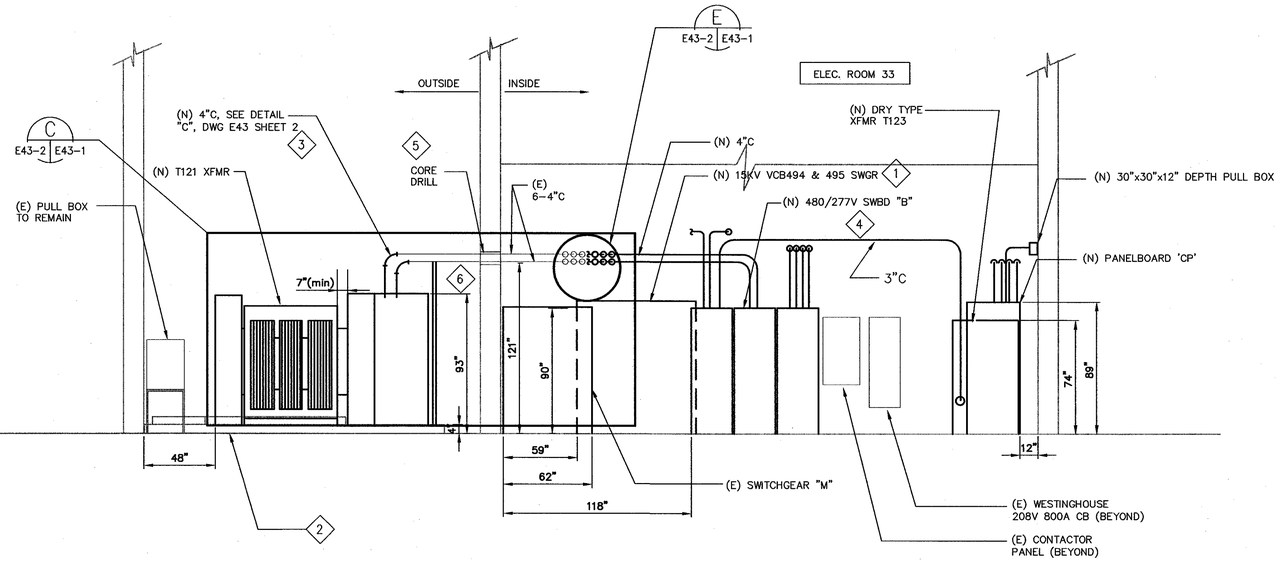

B E42 | E43-1 ELEVATION – NEW WORK
SCALE: 1/4"=1'-0"

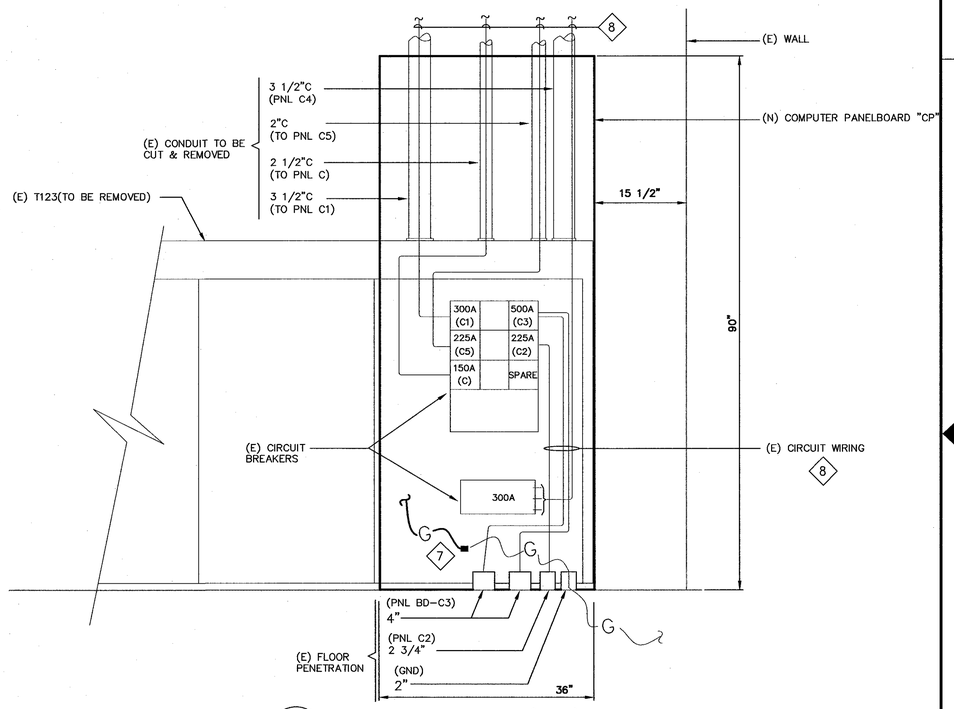

C E42 | E43-1 PANELBOARD 'CP' EXISTING CONDITION/NEW WORK
SCALE: 1"=1'-0"

Approved for Construction
Moffett Field Permit Board
Chief Building Official
Permit No. 11P038

ZONE	LETTER	DESCRIPTION	DRAWN	DATE	APPRVD
REVISIONS					

REGISTERED PROFESSIONAL ENGINEER JAMES T. McCUSKER No. E013699 ELECTRICAL STATE OF CALIFORNIA

1"=1' 0 6" 1 2 3
1/4"=1' 0 2 4 8 12

DRAWN N.NIZAMOVA	DATE 9/21/11	
DESIGNED L.BELTRAN/N.NIZAMOVA	DATE 9/21/11	
CHECKED J.McCUSKER	DATE 9-21-11	
PROJMGR F.JONES	DATE 9.23.11	
REQUESTER D.TRAN	DATE 9.21.11	
R&QA	DATE	
SAFETY	DATE	
SUPERVISOR S.FRANKEL OCT 21 2011	DATE	

Ames Research Center
Moffett Field, California

RESTORATION OF ELECTRICAL DISTRIBUTION SYSTEM-HIGH VOLTAGE WP1
N243 INDOOR/OUTDOOR SUBSTATION
ELECTRICAL

ELEVATION & DETAILS DEMOLITION & NEW WORK

SIZE	CAGE CODE	DWG NO.	REV
D	25307	A1---1001-E43	
SCALE AS NOTED		INDEX	SHEET 1 OF 2

FILE NAME: A1---1001-E043_1_R7.DWG 9-21-11

60176753.0001

DWG: \\N243S2\Proj\WEDS\60176753 (K10018)_WEDS - High Voltage\500 CAD\WEDS_HV-WP1\N243-Substation\E\Sheet\A1---1001-E043_1_R#.DWG Version: 17.1s (LMS Tech) User: pdden
DATE: Sep 20, 2011 - 5:27:10 pm

DWG NO. A1---1001-E43 | SH. 2 | REV

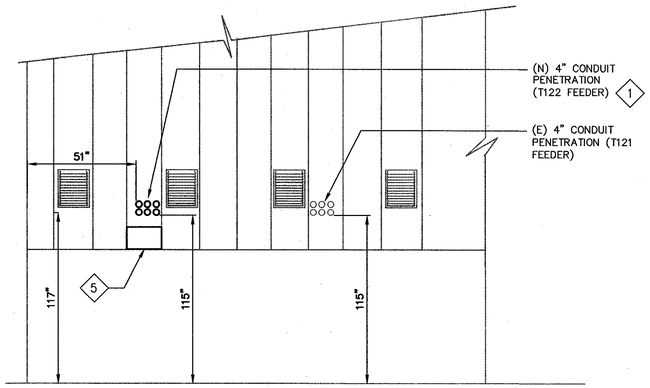

A XFMR T121 & T122 CONDUIT PENETRATION DETAIL
E42 | E43-2 SCALE:1/4"=1'-0"

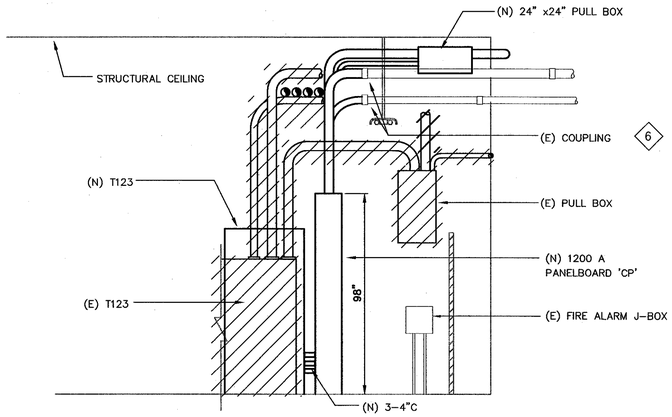

B TRANSFORMER T123 & 1200A PANEL 'CP' ELEVATION
E42 | E43-2 SCALE: 3/8"=1'-0"

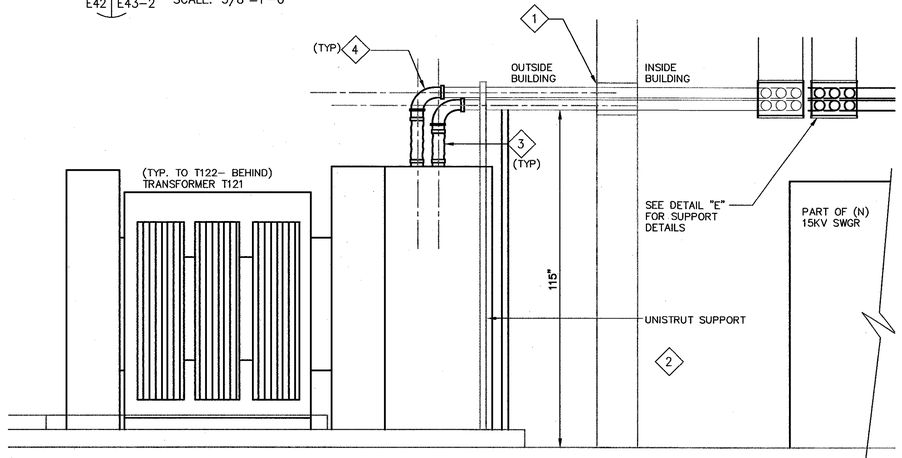

C TRANSFORMERS T121 &T122 TYPICAL CONDUIT SUPPORT
E43-1 | E43-2 SCALE:1/2"=1'-0"

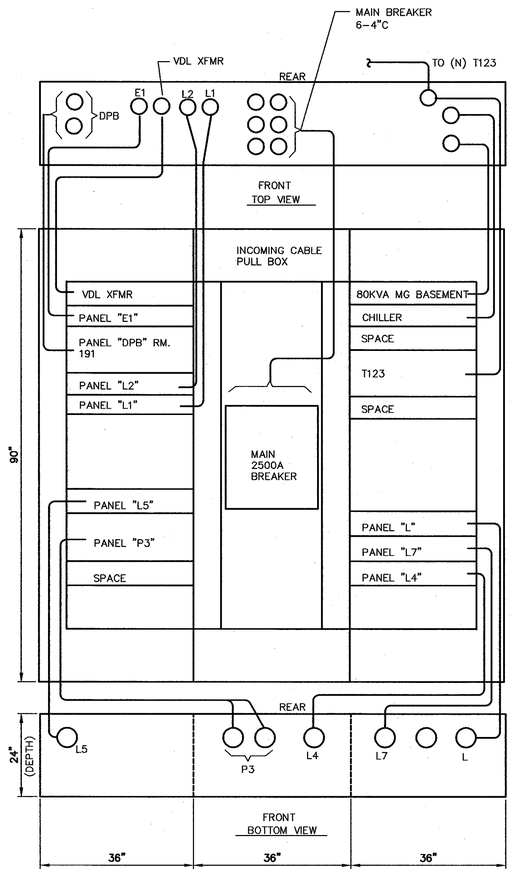

D NEW SWITCHGEAR "B" ELEVATION
E42 | E43-2 SCALE: N.T.S.

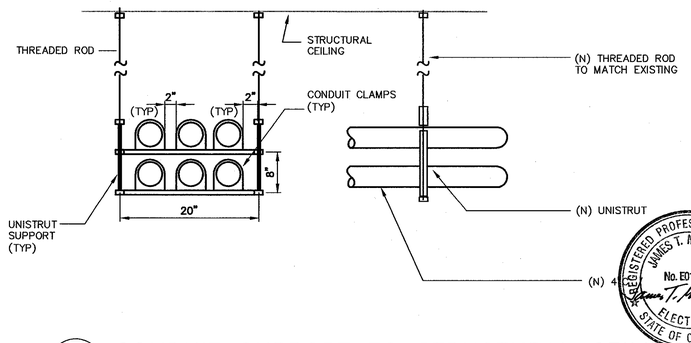

E CONDUIT SUPPORT TO STRUCTURAL CEILING
SCALE:1"=1'-0"

SHEET NOTES

1. FOR GENERAL NOTES, SYMBOLS AND ABBREVIATIONS, SEE DRAWING G4.
2. HATCHED LINES INDICATE EXISTING MATERIAL/EQUIPMENT TO BE DEMOLISHED AND REMOVED U.O.N.
3. DARK OR HEAVY LINES INDICATE NEW MATERIAL/EQUIPMENT TO BE PROVIDED. LIGHT LINES INDICATE EXISTING CONDITION, U.O.N.
4. CONTRACTOR SHALL FIELD VERIFY ALL MEASUREMENTS AT THE SITE AND SHALL BE RESPONSIBLE FOR THEIR ACCURACY PRIOR TO STARTING ANY WORK OR ORDERING ANY MATERIAL.

KEY NOTES

1. CORE DRILL THROUGH CONCRETE WALL NEW CONDUIT PENETRATION FOR T122 FEEDER. PROVIDE SUITABLE WEATHERPROOFING AND FIRESTOP SEALING MATERIAL.
2. PROVIDE UNISTRUT SUPPORT ON BOTH SIDE OF THE TRANSFORMER BREAKER ENCLOSURE TO SUPPORT THE NEW 6-4"C.
3. PROVIDE NEW LIQUIDTIGHT FLEXIBLE METAL CONDUIT.
4. PROVIDE (N) COUPLING AS SHOWN, TO BE RECONNECTED TO NEW CONDUIT FOR BOTH TRANSFORMER T121 & T122 XFMRS.
5. BLANK-OFF AND PATCH EXISTING THROUGH WALL OPENING AND PROVIDE SUITABLE WEATHERPROOFING AND FIRESTOP SEALING MATERIAL.
6. INTERCEPT NEW CONDUIT FROM (E) COUPLING.

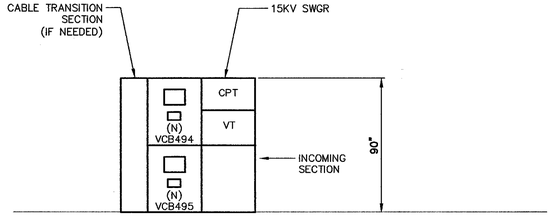

F VCB494 & VCB495 DETAIL
E42 | E43-2 SCALE: 1/4"=1'-0"

Approved for Construction
Moffett Field Permit Board
Chief Building Official
Permit No. 11P038

ZONE	LETTER	DESCRIPTION	DRAWN	DATE	APPRVD
REVISIONS					

DRAWN N.NIZAMOVA	DATE 9/21/11	Ames Research Center Moffett Field, California
DESIGNED L.BELTRAN/N.NIZAMOVA	DATE 9/21/11	RESTORATION OF ELECTRICAL DISTRIBUTION SYSTEM-HIGH VOLTAGE WP1 N243 INDOOR/OUTDOOR SUBSTATION ELECTRICAL
CHECKED J.McCUSKER	DATE 9-21-11	ELEVATION & DETAILS DEMOLITION & NEW WORK
PROJMGR F.JONES	DATE 9.22.11	
REQUESTER D.TRAN	DATE 9/22/11	
R&QA	DATE	
SAFETY	DATE	
SUPERVISOR S.FRANKEL	DATE OCT 21 2011	SIZE D / CAGE CODE 25307 / A 1---1001-E43 / REV / SCALE AS NOTED / INDEX / SHEET 2 OF 2

FILE NAME: A1---1001-E043_2_R7.DWG 9-21-11

60176753.0001

DWG: \\N213FS2\Proj\REDS\60176753 (K10018)_REDS - High Voltage\500 CAD\REDS_HV-WP1\N243-Substation\E\Sheet\A1---1001-E043_2_RHV.DWG Version: 17.1s (LMS Tech) User: polden
DATE: Sep 20, 2011 - 5:27:19 pm

DWG NO. A1---1001-E44 | SH. 1 | REV

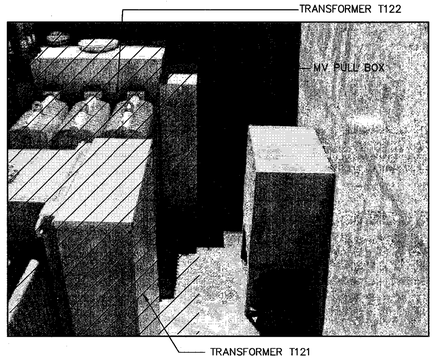

1 E41 | E44 OUTDOOR TRANSFORMERS AND MV PULLBOX
SCALE: NTS

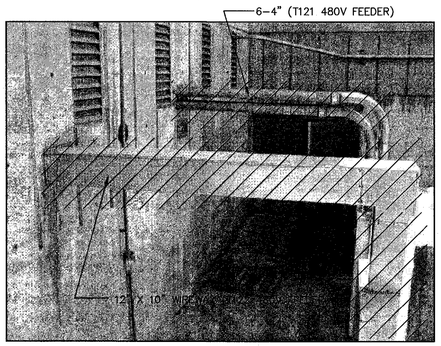

2 E41 | E44 OUTDOOR T121 AND T122 (E) RACEWAY PENETRATION
SCALE: NTS

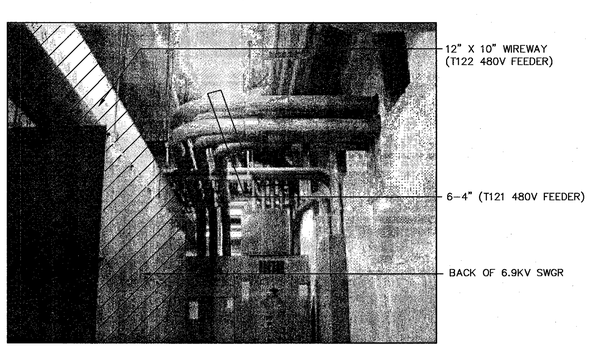

3 E41 | E44 INDOOR (E) RACEWAY PENETRATION- WEST WALL
SCALE: NTS

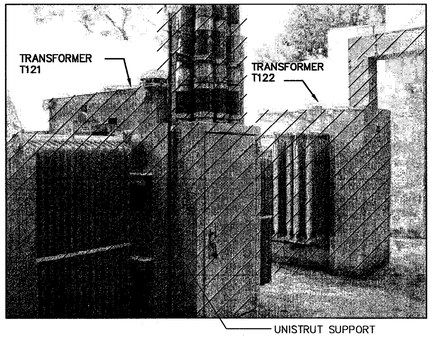

4 E41 | E44 OUTDOOR TRANSFORMERS T121 & T122 VIEWS
SCALE: NTS

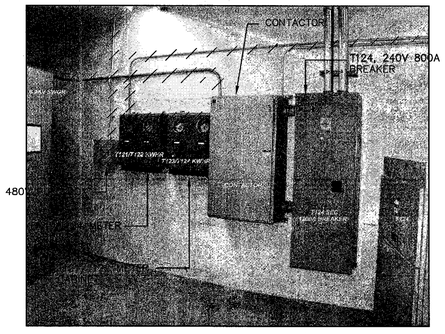

5 E41 | E44 METERING AND CONTACTOR MISC PANEL- NORTH WALL
SCALE: NTS

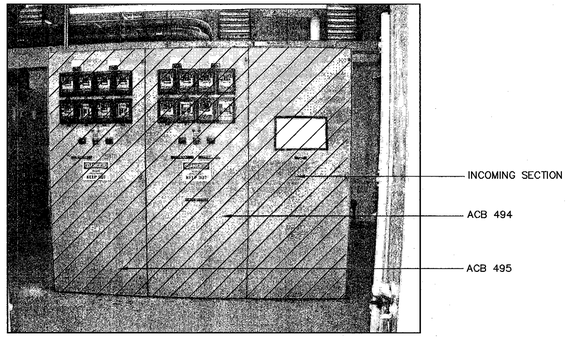

6 E41 | E44 ACB 494/495 SWITCHGEAR FRONT VIEW
SCALE: NTS

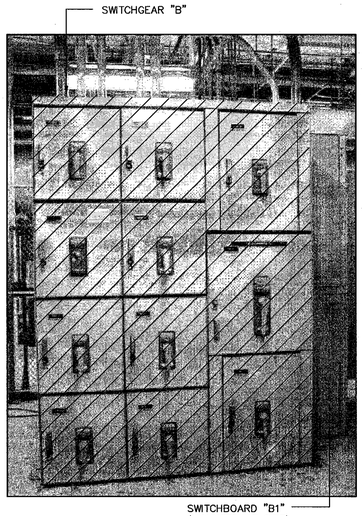

7 E41 | E44 SWITCHGEAR "B" AND "B1" ELEVATION VIEWS
SCALE: NTS

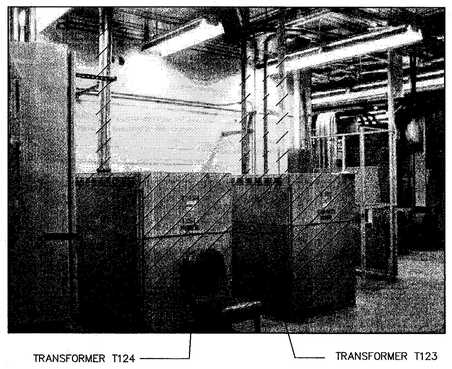

8 E41 | E44 INDOOR XFMRS T123 & T124 & CONDUITS VIEWS
SCALE: NTS

9 E41 | E44 INDOOR XFMR T124 AND OVERHEAD CONDUITS
SCALE: NTS

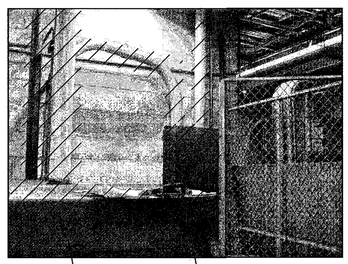

10 E41 | E44 (E) PULLBOX DETAILS
SCALE: NTS

SHEET NOTES

1. FOR GENERAL NOTES, SYMBOLS AND ABBREVIATIONS, SEE DRAWING G4.
2. HATCHED LINES INDICATE EXISTING MATERIAL/EQUIPMENT TO BE DEMOLISHED AND REMOVED. U.O.N.
3. REFER TO DRAWING E41 FOR EQUIPMENT LAYOUT.

KEY NOTES

<1> NOT USED.

Approved for Construction
Moffett Field Permit Board
Chief Building Official
Permit No. 11P038

ZONE	LETTER	DESCRIPTION	DRAWN	DATE	APPRVD

REVISIONS

DRAWN	N.NIZAMOVA	9/21/11
DESIGNED	N.NIZAMOVA	9/21/11
CHECKED	J.McCUSKER	9-21-11
PROJMGR	F.JONES	9.23.11
REQUESTER	D.TRAN	9/21/11
R&QA		DATE
SAFETY		DATE
SUPERVISOR	S.FRANKEL	OCT 21 2011 DATE
		DATE

REGISTERED PROFESSIONAL ENGINEER JAMES T. McCUSKER No. E013699 ELECTRICAL STATE OF CALIFORNIA

Ames Research Center
Moffett Field, California

RESTORATION OF ELECTRICAL DISTRIBUTION SYSTEM-HIGH VOLTAGE WP1
N243 INDOOR/OUTDOOR SUBSTATION
ELECTRICAL

PHOTOGRAPHIC DETAILS DEMOLITION

SIZE	CAGE CODE	REV
D	25307	A
SCALE	AS NOTED	INDEX / SHEET 1 OF 1

FILE NAME: A1---1001-E044_1_R7.DWG 9-21-11

60176753.0001

DWG: \\N213FS2\Proj\KEDS\60176753 (K10018)_KEDS - High Voltage\500 CAD\KEDS_-HV-WP1\V243-Substation\S\Sheet\A1---1001-E044_1_R4V.DWG Version: 17.1s (LMS Tech) User: podeh
DATE: Sep 21, 2011 - 1:58:27 pm

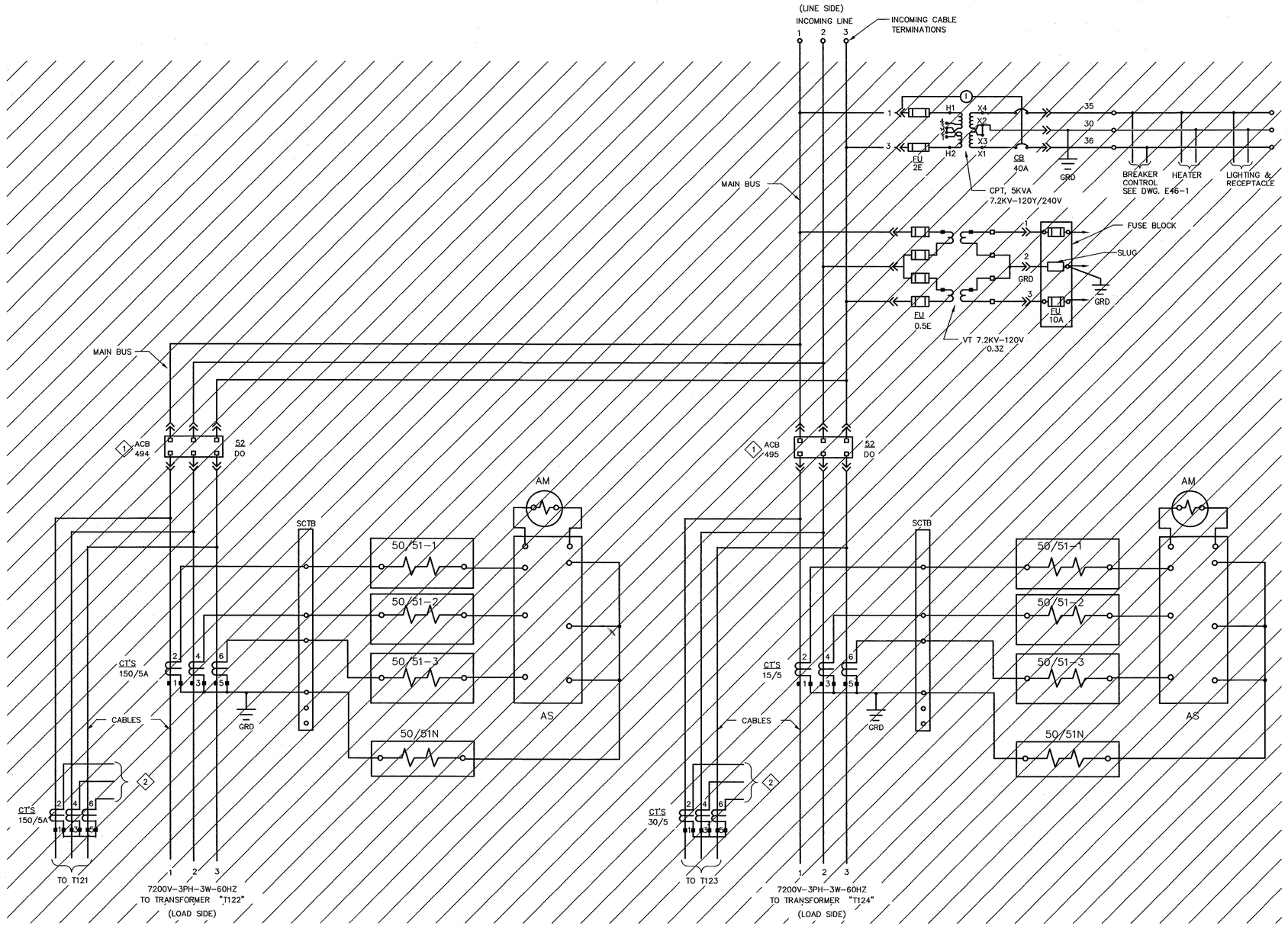

1 THREE LINE DIAGRAM – DEMOLITION
SCALE: NTS

SHEET NOTES

1. FOR GENERAL NOTES, SYMBOLS AND ABBREVIATIONS, SEE DRAWING G4.
2. HATCHED LINES INDICATE EXISTING MATERIAL/EQUIPMENT TO BE DEMOLISHED AND REMOVED. U.O.N.
3. THE DIAGRAM IS PROVIDED FOR GUIDANCE ONLY. THE CONTRACTOR SHALL FIELD VERIFY ALL EXISTING EQUIPMENT INCLUDING TERMINAL BLOCKS, TERMINAL IDENTIFICATION NUMBER, CONNECTIONS ETC. AND REVISE DRAWINGS AS NEEDED TO MATCH EXISTING AND NEW EQUIPMENT TO PROVIDE A COMPLETE FUNCTIONAL SYSTEM.

KEY NOTES

1. DISCONNECT AND REMOVE EXISTING ACB494/ACB495 SWITCHGEAR INCLUDING ALL ASSOCIATED DEVICES & ACCESSORIES.
2. RELAY CONNECTIONS FOR T121 IS SIMILAR TO T122 AND RELAY CONNECTIONS FOR T123 IS SIMILAR TO T124.

Approved for Construction
Moffett Field Permit Board

Chief Building Official
Permit No. 11P038

ZONE	LETTER	DESCRIPTION	DRAWN	DATE	APPRVD

REVISIONS

DRAWN N.NIZAMOVA		DATE 9/21/11
DESIGNED L.BELTRAN/N.NIZAMOVA		DATE 9/21/11
CHECKED J.McCUSKER		DATE 9-21-11
PROJMGR F.JONES		DATE 9.23.11
REQUESTER D.TRAN		DATE 9.26.11
R&QA		DATE
SAFETY		DATE
SUPERVISOR S.FRANKEL	OCT 21 2011	DATE

REGISTERED PROFESSIONAL ENGINEER JAMES T. McCUSKER No. E013699 ELECTRICAL STATE OF CALIFORNIA

Ames Research Center
Moffett Field, California

RESTORATION OF ELECTRICAL DISTRIBUTION SYSTEM–HIGH VOLTAGE WP1
N243 INDOOR/OUTDOOR SUBSTATION
ELECTRICAL

THREE LINE DIAGRAM DEMOLITION & NEW WORK

SIZE	CAGE CODE	DWG NO.	REV
D	25307	A1---1001-E45	
SCALE AS NOTED		INDEX	SHEET 1 OF 2

FILE NAME: A1---1001-E045_1_R7.DWG 9-21-11

60176753.0001

DWG: \\N2.3FS2\Proj\RESD\60176753 (K10018)_RESD - High Voltage\300 CAD\RESD_HV-WP1\N243-Substation\E\Sheet\A1---1001-E045_1_RHV.DWG Version: 17.1s (LMS Tech) User: polden
DATE: Sep 20, 2011 - 5:27:27 pm

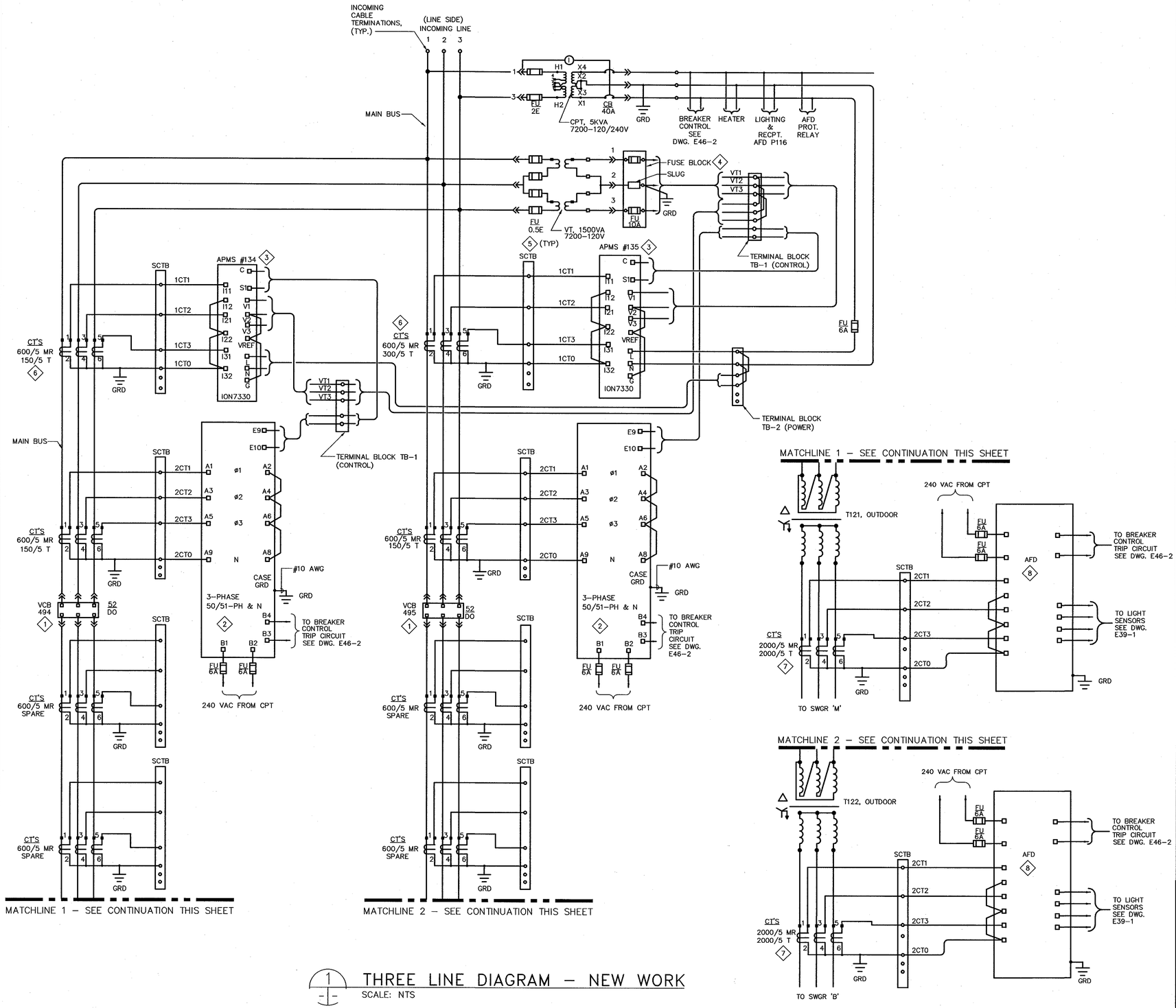

1 THREE LINE DIAGRAM – NEW WORK
SCALE: NTS

SHEET NOTES

1. FOR GENERAL NOTES, SYMBOLS AND ABBREVIATIONS, SEE DRAWING G4.
2. DARK OR HEAVY LINES INDICATE NEW MATERIAL/EQUIPMENT TO BE PROVIDED. U.O.N.
3. THE DIAGRAM IS PROVIDED FOR GUIDANCE ONLY. THE CONTRACTOR SHALL FIELD VERIFY ALL EXISTING EQUIPMENT INCLUDING TERMINAL BLOCKS, TERMINAL IDENTIFICATION NUMBER, CONNECTIONS ETC. AND REVISE DRAWINGS AS NEEDED TO MATCH EXISTING AND NEW EQUIPMENT TO PROVIDE A COMPLETE FUNCTIONAL SYSTEM.
4. ALL CT WIRES SHALL BE #10 AWG MINIMUM, TYPE SIS. ALL VOLTAGE, CPT SECONDARY AND BREAKER TRIP WIRES SHALL BE #12 AWG MINIMUM, TYPE SIS. U.O.N.

KEY NOTES

1. PROVIDE NEW 15kV, 1200A SWITCHGEAR WITH 15kV VACUUM CIRCUIT BREAKER AND ACCESSORIES PER SPECIFICATION.
2. INSTALL NEW GFE ALSTOM RELAY COMPLETELY WIRED INTO THE EQUIPMENT.
3. INSTALL NEW GFE DIGITAL POWER METER COMPLETELY WIRED INTO THE EQUIPMENT.
4. PROVIDE FUSE BLOCK, FLEXCORE KLK–3 OR APPROVED EQUAL.
5. PROVIDE (8) CIRCUIT SHORTING TERMINAL BLOCK (SCTB), FLEXCORE 1KU6SC OR APPROVED EQUAL.
6. PROVIDE (2) SETS OF 3 WINDOW–TYPE MULTI–RATIO CT'S ON THE LINE SIDE OF THE BREAKER. PROVIDE (2) ADDITIONAL SPARE SETS OF CT'S ON THE LOAD SIDE OF THE BREAKER. ALL CT'S SHALL BE C200 ACCURACY.
7. PROVIDE (1) SET OF 3 WINDOW–TYPE MULTI–RATIO CT'S ON THE LOAD SIDE OF THE TRANSFORMER. CT'S SHALL BE C400 ACCURACY.
8. INSTALL ARC FLASH RELAY COMPLETELY WIRED INTO THE NEW SWITCHGEAR. INSTALLATION SHALL BE IN ACCORDANCE WITH MANUFACTURER'S RECOMENDATIONS.

REGISTERED PROFESSIONAL ENGINEER JAMES T. McCUSKER No. E013699 ELECTRICAL STATE OF CALIFORNIA

Approved for Construction
Moffett Field Permit Board
Chief Building Official
Permit No. 11P038

ZONE	LETTER	DESCRIPTION	DRAWN	DATE	APPRVD

REVISIONS

DRAWN N.NIZAMOVA	DATE 9/21/11	Ames Research Center, Moffett Field, California
DESIGNED L.BELTRAN/N.NIZAMOVA	DATE 9/21/11	RESTORATION OF ELECTRICAL DISTRIBUTION SYSTEM–HIGH VOLTAGE WP1
CHECKED J.McCUSKER	DATE 9-21-11	N243 INDOOR/OUTDOOR SUBSTATION
PROJMGR F.JONES	DATE 9.23.11	ELECTRICAL
REQUESTER D.TRAN	DATE 9/26/11	THREE LINE DIAGRAM DEMOLITION & NEW WORK
R&QA	DATE	
SAFETY	DATE	
SUPERVISOR S.FRANKEL	DATE OCT 21 2011	SIZE D · CAGE CODE 25307 · REV A · A1–––1001–E45
	DATE	SCALE NONE · INDEX · SHEET 2 OF 2

FILE NAME: A1–––1001–E045_2_R7.DWG 9–21–11

601767753.0001

DWG: \\N213FS2\Proj\NE03\601767\53 (K10019)_REDS – High Voltage\500 CAD\REDS_HV-WP1\N243-Substation\E\Sheet\A1–––1001–E045_2_RHV.DWG Version: 17.1s (LMS Tech) User: polden
DATE: Sep 20, 2011 – 2:27:33 pm

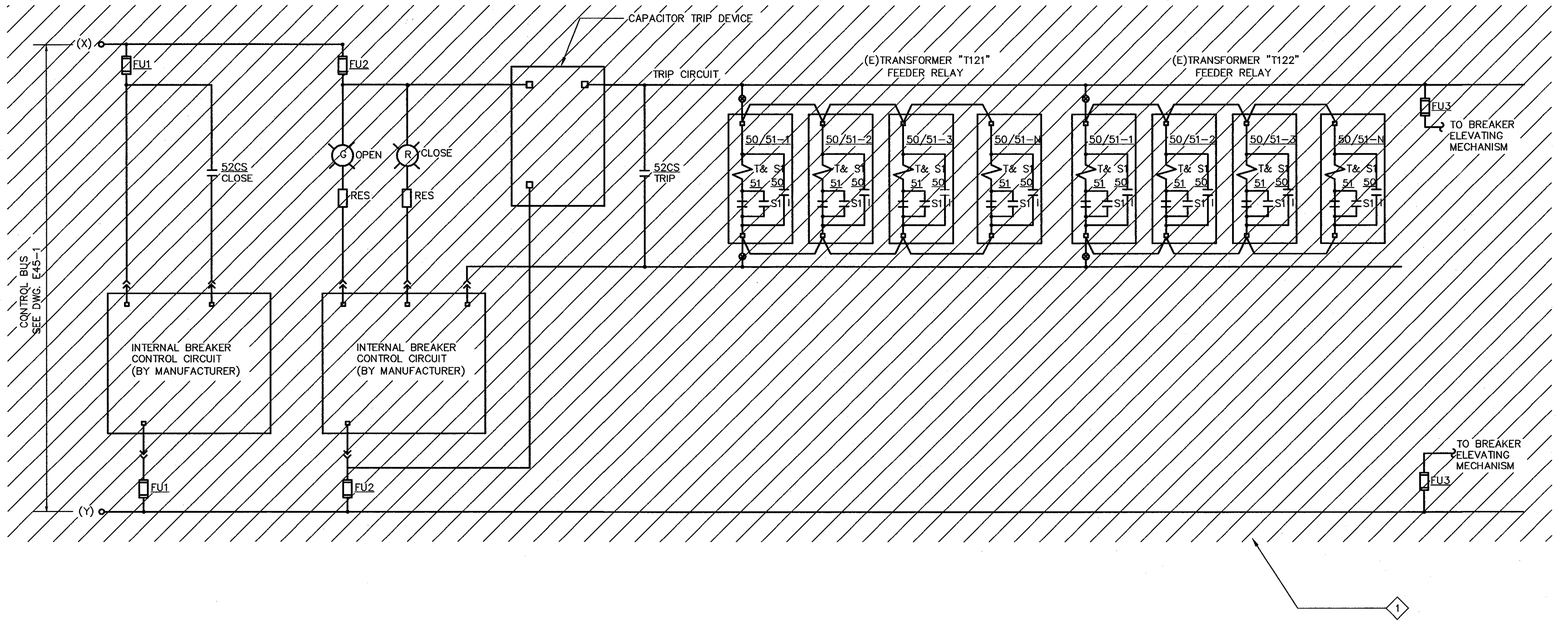

1 ACB494 BREAKER CONTROL DIAGRAM – DEMOLITION (TYP FOR ACB495, T123/T124)
SCALE: NTS

SHEET NOTES

1. FOR GENERAL NOTES, SYMBOLS AND ABBREVIATIONS, SEE DRAWING G4.
2. HATCHED LINES INDICATE EXISTING MATERIAL/EQUIPMENT TO BE DEMOLISHED AND REMOVED. U.O.N.
3. THE DIAGRAM IS PROVIDED FOR GUIDANCE ONLY. THE CONTRACTOR SHALL FIELD VERIFY ALL EXISTING EQUIPMENT INCLUDING TERMINAL BLOCKS, TERMINAL IDENTIFICATION NUMBER, CONNECTIONS ETC. AND REVISE DRAWINGS AS NEEDED.
4. THE CONTROL DIAGRAM IS BASED ON THE LATEST KMOWN EXISTING DRAWINGS.

KEY NOTES

1 DISCONNECT AND REMOVE EXISTING ACB494/ACB495 SWITCHGEAR INCLUDING ALL ASSOCIATED DEVICES AND ACESSORIES.

Approved for Construction
Moffett Field Permit Board
Chief Building Official
Permit No. 11P038

ZONE	LETTER	DESCRIPTION	DRAWN	DATE	APPRVD

REVISIONS

DRAWN	N.NIZAMOVA	DATE 9/21/11
DESIGNED	L.BELTRAN/N.NIZAMOVA	DATE 9/21/11
CHECKED	J.McCUSKER	DATE 9-21-11
PROJMGR	F.JONES	DATE 9-23-11
REQUESTER	D.TRAN	DATE 9/26/11
R&QA		DATE
SAFETY		DATE
SUPERVISOR	S.FRANKEL	DATE OCT 21 2011

REGISTERED PROFESSIONAL ENGINEER JAMES T. McCUSKER No. E013699 ELECTRICAL STATE OF CALIFORNIA

Ames Research Center
Moffett Field, California

RESTORATION OF ELECTRICAL DISTRIBUTION SYSTEM–HIGH VOLTAGE WP1
N243 INDOOR/OUTDOOR SUBSTATION
ELECTRICAL
VCB494/495
BREAKER CONTROL DIAGRAMS
DEMOLITION & NEW WORK

SIZE	CAGE CODE	DWG NO.	REV
D	25307	A1---1001-E46	
SCALE NONE		INDEX	SHEET 1 OF 2

FILE NAME: A1---1001-E046_1_R7.DWG 9-21-11

60176753.0001

DWG: \\N213FS2\Proj\RED\60176753 (K10018)_RED5 - High Voltage\500 CAD\RED5_HV-WP1\N243-Substation\E\Sheet\A1---1001-E046_1_RHV.DWG Version: 17.1s (LMS Tech) User: pdden
DATE: Sep 20, 2011 - 5:27:39 pm

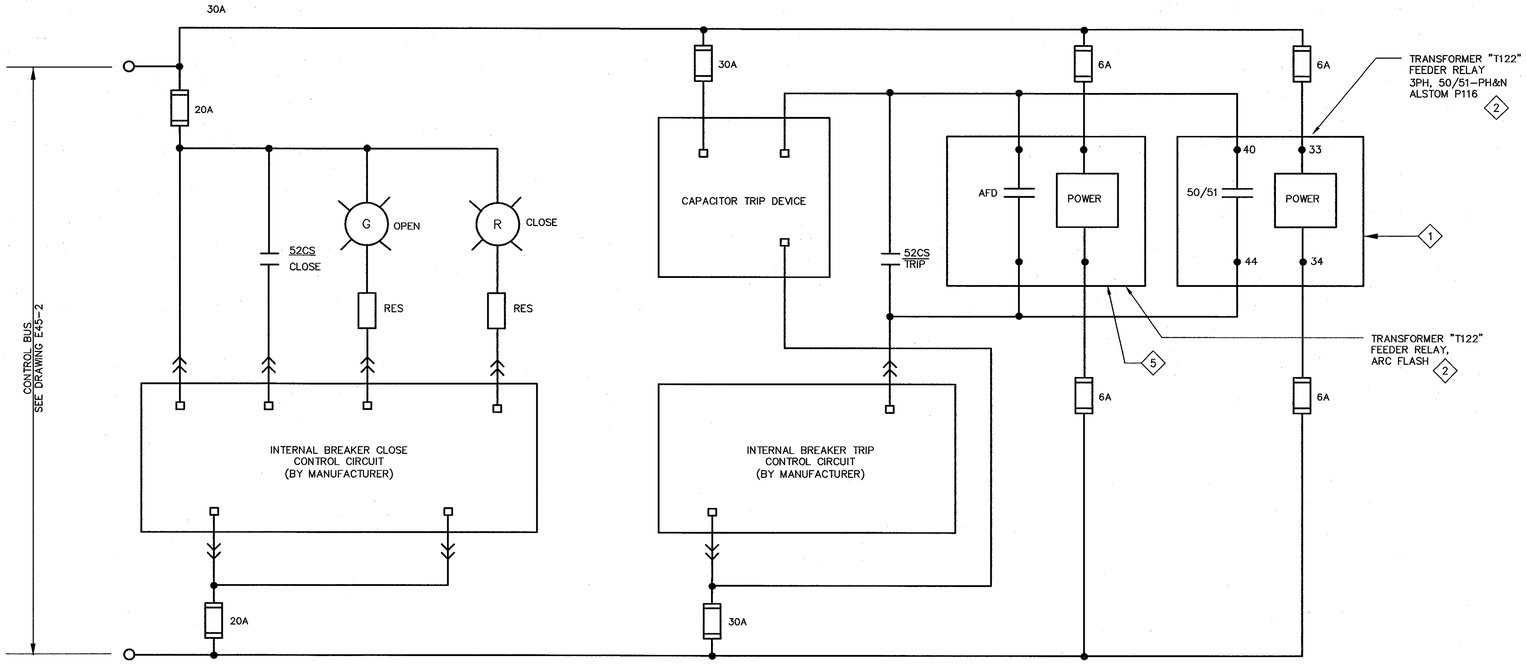

1 VCB495 BREAKER CONTROL DIAGRAM – NEW WORK
SCALE: NTS

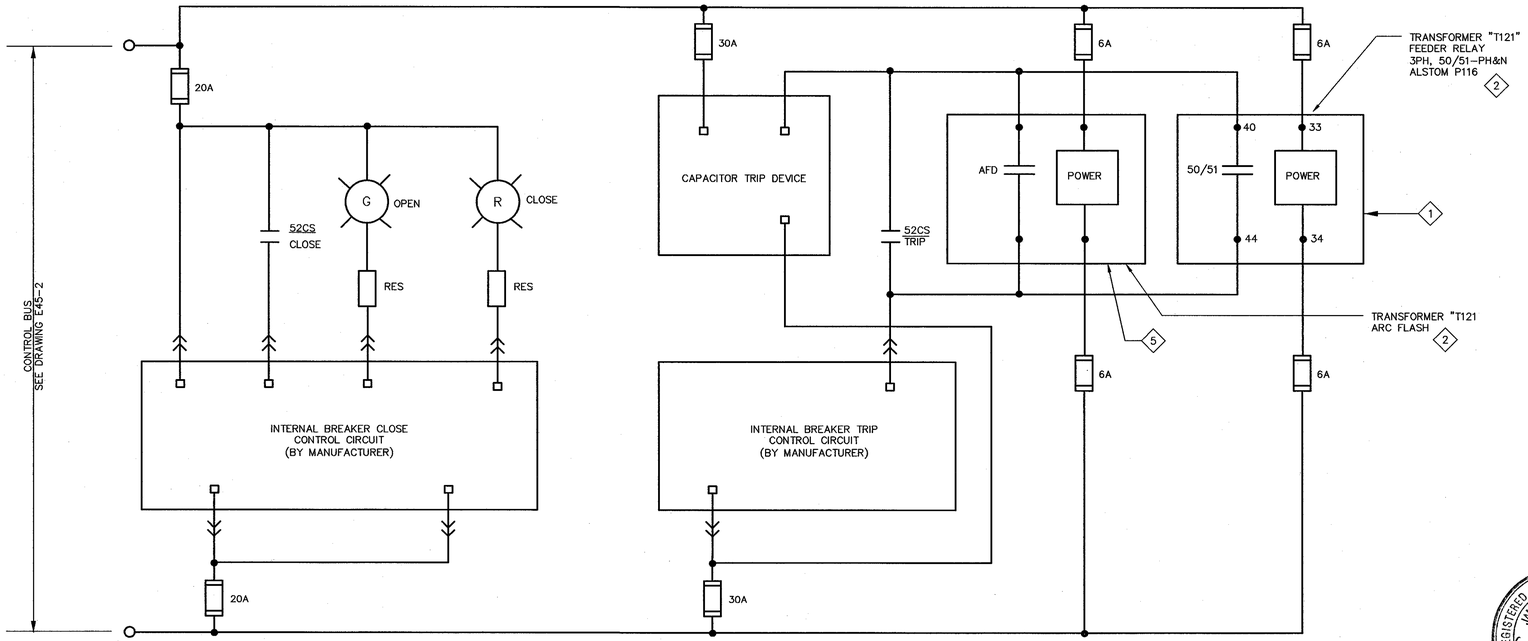

2 VCB494 BREAKER CONTROL DIAGRAM – NEW WORK
SCALE: NTS

SHEET NOTES

1. FOR GENERAL NOTES, SYMBOLS AND ABBREVIATIONS, SEE DRAWING G4.
2. HATCHED LINES INDICATE EXISTING MATERIAL/EQUIPMENT TO BE DEMOLISHED AND REMOVED. U.O.N.
3. DARK OR HEAVY LINES INDICATE NEW MATERIAL/EQUIPMENT TO BE PROVIDED. U.O.N.
4. THE DIAGRAMS ARE PROVIDED FOR GUIDANCE ONLY. THE CONTRACTOR SHALL FIELD VERIFY ALL EXISTING EQUIPMENT INCLUDING TERMINAL BLOCKS, TERMINAL IDENTIFICATION NUMBER, CONNECTIONS ETC. AND REVISE DRAWINGS AS NEEDED TO MATCH EXISTING AND NEW EQUIPMENT TO PROVIDE A COMPLETE FUNCTIONAL SYSTEM.
5. THE CONTROL DIAGRAMS ARE BASED ON THE LATEST KMOWN EXISTING DRAWINGS.
6. NEW TERMINAL MARKINGS ARE BASED ON CUTLER HAMMER INFORMATION.

KEY NOTES:

1. INSTALL NEW GFE 3-PHASE MICROPROCESSOR BASED RELAY, NEW ALSTOM MICOM P116, COMPLETELY WIRED INTO THE EQUIPMENT.
2. TYPICAL BREAKER CONTROL DIAGRAMS WITH THE RELATED TRANSFORMER FEEDER RELAYS. FOR SUBSTATION ONE LINE DIAGRAMS AND THREE LINE DIAGRAMS, REFER TO THE DRAWINGS E39-1 AND E45-2 RESPECTIVELY.
3. INSTALL NEW ARC FLASH DETECTOR COMPLETELY WIRED INTO THE EQUIPMENT.

Approved for Construction
Moffett Field Permit Board
Chief Building Official
Permit No. 11P038

ZONE	LETTER	DESCRIPTION	DRAWN	DATE	APPRVD
REVISIONS					

DRAWN N.NIZAMOVA	DATE 9/21/11	Ames Research Center, Moffett Field, California
DESIGNED L.BELTRAN/N.NIZAMOVA	DATE 9/21/11	RESTORATION OF ELECTRICAL DISTRIBUTION SYSTEM-HIGH VOLTAGE WP1
CHECKED J.McCUSKER	DATE 9-21-11	N243 INDOOR/OUTDOOR SUBSTATION
PROJMGR F.JONES	DATE 9.23.11	ELECTRICAL
REQUESTER D.TRAN	DATE 9/22/11	VCB494/495 BREAKER CONTROL DIAGRAMS DEMOLITION & NEW WORK
R&QA	DATE	
SAFETY	DATE	
SUPERVISOR S.FRANKEL	DATE OCT 31 2011	SIZE D; CAGE CODE 25307; REV A; SCALE NONE; INDEX; SHEET 2 OF 2

REGISTERED PROFESSIONAL ENGINEER JAMES T. McCUSKER No. E013699 ELECTRICAL STATE OF CALIFORNIA

FILE NAME: A1---1001-E046_1_R7.DWG 9-21-11

601767753.0001

DWG: \\N213FS2\Proj\REDS\601767753 (K10018)_REDS - High Voltage\300 CAD\REDS_HV-WP1\N243-Substation\E\Sheet\A1---1001-E046_2_REV.DWG Version: 17.1s (LMS Tech) User: pdden
DATE: Sep 20, 2011 - 5:27:44 pm

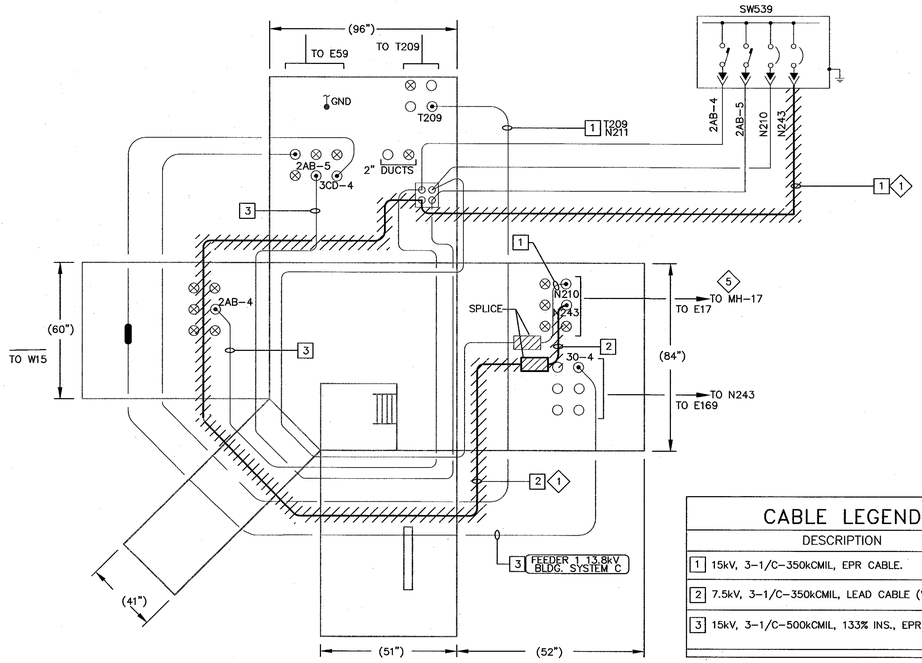

CABLE LEGEND

	DESCRIPTION
1	15kV, 3-1/C-350kCMIL, EPR CABLE.
2	7.5kV, 3-1/C-350kCMIL, LEAD CABLE (VCL)
3	15kV, 3-1/C-500kCMIL, 133% INS., EPR CABLE.

1 MANHOLE NO. E16 DETAIL – DEMOLITION

SCALE: NTS

(KING ROAD, SW CORNER OF N213)

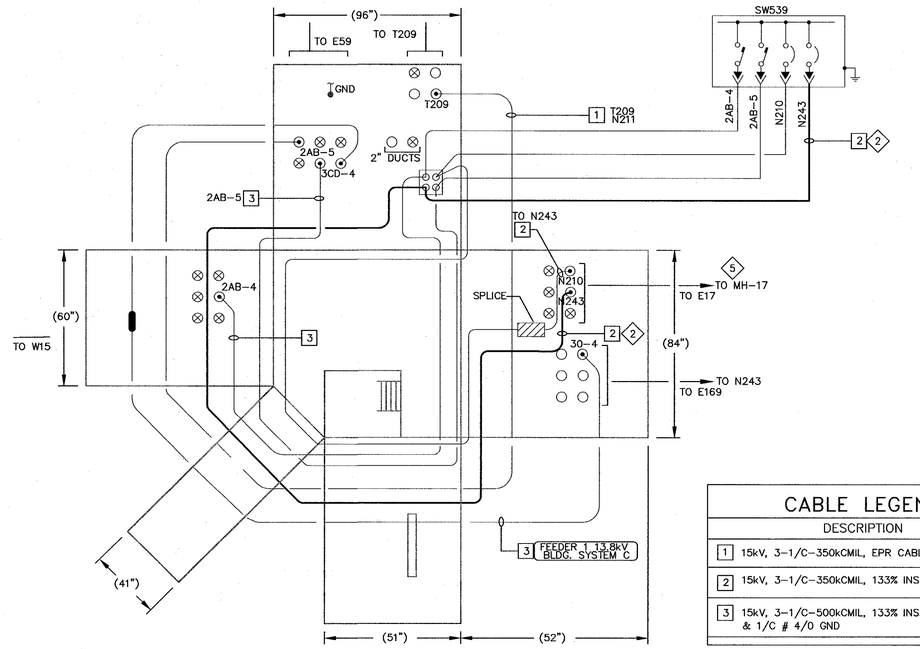

CABLE LEGEND

	DESCRIPTION
1	15kV, 3-1/C-350kCMIL, EPR CABLE.
2	15kV, 3-1/C-350kCMIL, 133% INS., EPR CABLE.
3	15kV, 3-1/C-500kCMIL, 133% INS., EPR CABLE. & 1/C # 4/0 GND

2 MANHOLE NO. E16 DETAIL – NEW WORK

SCALE: NTS

(KING ROAD, SW CORNER OF N213)

SHEET NOTES

1. FOR GENERAL NOTES, SYMBOLS AND ABBREVIATIONS, SEE DRAWING G4.
2. SHEET NOTES #1,2,3 ARE NOT PART OF THIS CONTRACT (THE INTENTION IS FOR NASA 'IN-HOUSE' USE)
3. THIS DRAWING IS NOT THE CONTROLLED NASA AMES CONFIGURATION MANAGEMENT BASELINE DRAWING.
4. THE AMES CONFIGURATION MANAGEMENT BASELINE DRAWING THAT WAS USED TO CREATE THE PROJECT DRAWING IS A1---9801-E16.
5. NOT ALL CONDUITS AND CONDUCTORS ARE SHOWN ON DRAWING.
6. HATCHED LINES INDICATE EXISTING MATERIAL/EQUIPMENT TO BE DEMOLISHED AND REMOVED, U.O.N.
7. CONTRACTOR SHALL FIELD VERIFY ALL MEASUREMENTS AT THE SITE AND SHALL BE RESPONSIBLE FOR THEIR ACCURACY PRIOR TO STARTING ANY WORK OR ORDERING ANY MATERIAL.
8. UPON COMPLETION OF CABLE WORK AND PRIOR ENERGIZATOIN, CONTRACTOR SHALL INFORM GOVERNMENT FOR TAKING AS-BUILT PHOTOS AND UPDATING OF NASA REFERENCE DWG.
9. NEW CABLE ROUTING INSIDE THE MANHOLE IS SHOWN DIAGRAMMATICALLY. EXACT CABLE ROUTING INSIDE MANHOLE SHALL BE IN ACCORDANCE WITH DWG E69.
10. FOR N243 INDOOR/OUTDOOR SUBSTATION SITE PLAN – EXISTING/DEMO AND NEW WORK SEE DRAWING E40.
11. LIGHT LINES INDICATE EXISTING CONDITION AND DARK LINES INDICATE NEW WORK.

KEY NOTES:

1. DISCONNECT AND REMOVE EXISTING CABLE FROM SWITCH 475 TO N243 SUBSTATION VCB494/VCB495 SWITCHGEAR VIA MH E16, MH E17, MH E126 & MH E148.
2. PROVIDE 15kV, 3-1/C-350KCMIL, 133 % INS., EPR CABLE & 1/C # 4/0 GND. INSTALL FEEDER IDENTIFICATION TAG & PHASE IDENTIFICATION COLOR TAPE.
3. ALL INFORMATION INCLUDED IN THIS DETAIL INCLUDING CABLE LEGEND REFERENCES IS CONSIDERED AS EXISTING CONDITIONS ARE BASED ON LATEST KNOWN EXISTING DWGS.
4. UPON COMPLETION OF CABLE WORK AND PRIOR TO ENERGIZATOIN, CONTRACTOR SHALL INFORM CONTRACTING OFFICER FOR FINAL INSPECTION, TAKING OF AS-BUILT PHOTOS AND UPDATING OF NASA REFERENCE DWG.
5. REFER TO DWG E48, FOR MANHOLE NO. E17 DETAILS.

NASA REFERENCE DRAWINGS:

2. A1---9801-E16 UNDERGROUND POWER DISTRIBUTION MH E16 DETAILS.

REGISTERED PROFESSIONAL ENGINEER
JAMES T. McCUSKER
No. E013699
ELECTRICAL
STATE OF CALIFORNIA

Approved for Construction
Moffett Field Permit Board
Chief Building Official
Permit No. 11P038

ZONE	LETTER	DESCRIPTION	DRAWN	DATE	APPRVD

REVISIONS

DRAWN N.NIZAMOVA	DATE 9/21/11	Ames Research Center, Moffett Field, California
DESIGNED L.BELTRAN/N.NIZAMOVA	DATE 9/21/11	
CHECKED J.McCUSKER	DATE 9-27-11	RESTORATION OF ELECTRICAL DISTRIBUTION SYSTEM-HIGH VOLTAGE WP1 N243 INDOOR/OUTDOOR SUBSTATION ELECTRICAL
PROJMGR F.JONES	DATE 9-23-11	MANHOLE NO. E16 DETAILS DEMOLITION & NEW WORK
REQUESTER D.TRAN	DATE 9/26/11	
R&QA	DATE	SIZE D; CAGE CODE 25307; DWG NO. A 1---1001-E47; REV
SAFETY	DATE	SCALE NONE; INDEX; SHEET 1 OF 1
SUPERVISOR S.FRANKEL	DATE OCT 21 2011	FILE NAME: A1---1001-E047_1_R7.DWG 9-21-11

60176753.0001

DWG: \\N213FS2\Proj\REDS\60176753 (K10018)_REDS - High Voltage\500 CAD\REDS_HV-WP1\N243-Substation\E\Sheet\A1---1001-E047_1_RHV.DWG Version: 17.1s (LMS Tech) User: pdden
DATE: Sep 20, 2011 - 5:27:49 pm

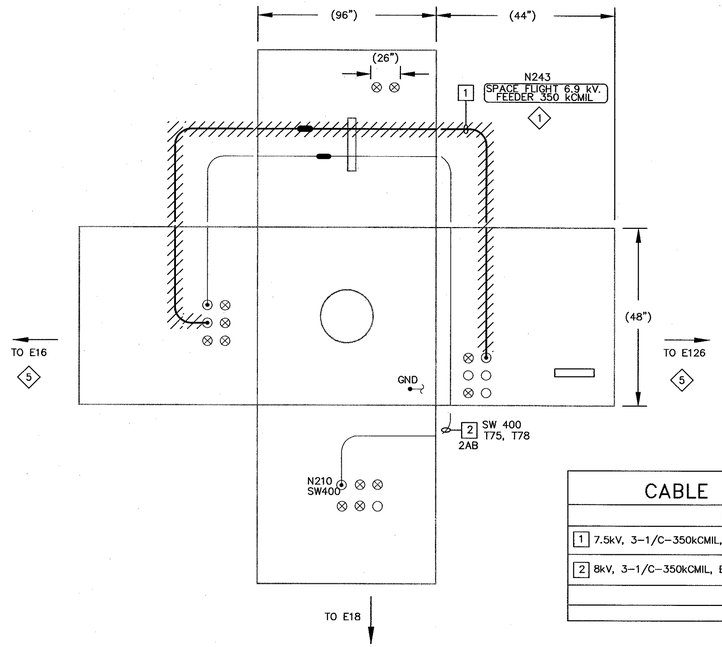

1 MANHOLE NO. E17 DETAIL – DEMOLITION ◇3◇4

SCALE: NTS

(KING ROAD, FRONT OF N211)

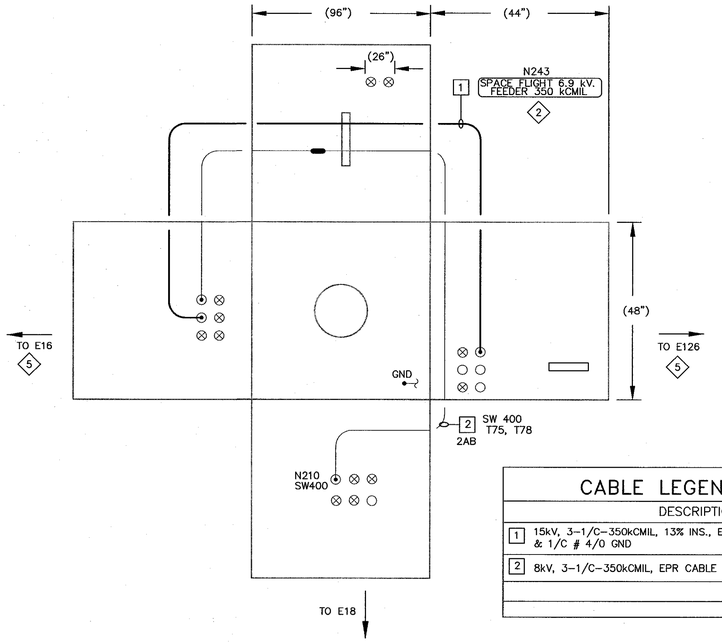

2 MANHOLE NO. E17 DETAIL – NEW WORK ◇3◇4

SCALE: NTS

(KING ROAD, FRONT OF N211)

CABLE LEGEND	
	DESCRIPTION
1	7.5kV, 3-1/C-350kCMIL, LEAD CABLE (VCL)
2	8kV, 3-1/C-350kCMIL, EPR CABLE

CABLE LEGEND	
	DESCRIPTION
1	15kV, 3-1/C-350kCMIL, 133% INS., EPR CABLE & 1/C # 4/0 GND
2	8kV, 3-1/C-350kCMIL, EPR CABLE

SHEET NOTES

1. FOR GENERAL NOTES, SYMBOLS AND ABBREVIATIONS, SEE DRAWING G4.
2. SHEET NOTES #1,2,3 ARE NOT PART OF THIS CONTRACT (THE INTENTION IS FOR NASA 'IN-HOUSE' USE)
3. THIS DRAWING IS NOT THE CONTROLLED NASA AMES CONFIGURATION MANAGEMENT BASELINE DRAWING.
4. THE AMES CONFIGURATION MANAGEMENT BASELINE DRAWING THAT WAS USED TO CREATE THE PROJECT DRAWING IS A1---9801-E17.
5. NOT ALL CONDUITS AND CONDUCTORS ARE SHOWN ON DRAWING.
6. HATCHED LINES INDICATE EXISTING MATERIAL/EQUIPMENT TO BE DEMOLISHED AND REMOVED, U.O.N.
7. CONTRACTOR SHALL FIELD VERIFY ALL MEASUREMENTS AT THE SITE AND SHALL BE RESPONSIBLE FOR THEIR ACCURACY PRIOR TO STARTING ANY WORK OR ORDERING ANY MATERIAL.
8. UPON COMPLETION OF CABLE WORK AND PRIOR ENERGIZATIOIN, CONTRACTOR SHALL INFORM GOVERNMENT FOR TAKING AS-BUILT PHOTOS AND UPDATING OF NASA REFERENCE DWG.
9. NEW CABLE ROUTING INSIDE THE MANHOLE IS SHOWN DIAGRAMMATICALLY. EXACT CABLE ROUTING INSIDE MANHOLE SHALL BE IN ACCORDANCE WITH DWG E69.
10. FOR N243 INDOOR/OUTDOOR SUBSTATION SITE PLAN – EXISTING/DEMO AND NEW WORK SEE DRAWING E40.
11. LIGHT LINES INDICATE EXISTING CONDITION AND DARK LINES INDICATE NEW WORK.

KEY NOTES

1. DISCONNECT AND REMOVE EXISTING CABLE FROM SWITCH 475 TO N243 SUBSTATION VCB494/VCB495 SWITCHGEAR VIA MH E16, MH E17, MH E126 & MH E148.
2. PROVIDE 15kV, 3-1/C-350kCMIL, 133 % INS., EPR CABLE & 1/C # 4/0 GND. INSTALL FEEDER IDENTIFICATION TAG & PHASE IDENTIFICATION COLOR TAPE.
3. ALL INFORMATION INCLUDED IN THIS DETAIL INCLUDING CABLE LEGEND REFENCES IS CONSIDERED AS EXISTING CONDITIONS BASED ON LATEST KNOWN EXISTING DWGS.
4. UPON COMPLETION OF CABLE WORK AND PRIOR ENERGIZATIOIN, CONTRACTOR SHALL INFORM GOVERMENT FOR TAKING AS-BUILT PHOTOS AND UPDATING OF NASA REFERENCE DWG.
5. REFER TO DWG E47, FOR MANHOLE NO. E16 AND DWG E49 FOR MANHOLE NO. E126 DETAILS.

NASA REFERENCE DRAWINGS

A1---9801-E17 UNDERGROUND POWER DISTRIBUTIOJN MH E17 DETAILS.

REGISTERED PROFESSIONAL ENGINEER
JAMES T. McCUSKER
No. E013699
ELECTRICAL
STATE OF CALIFORNIA

Approved for Construction
Moffett Field Permit Board
Chief Building Official
Permit No. 11P038

ZONE	LETTER	DESCRIPTION	DRAWN	DATE	APPRVD
		REVISIONS			

DRAWN N.NIZAMOVA	DATE 9/2/11	Ames Research Center, Moffett Field, California
DESIGNED L.BELTRAN/N.NIZAMOVA	DATE 9/2/11	RESTORATION OF ELECTRICAL DISTRIBUTION SYSTEM-HIGH VOLTAGE WP1
CHECKED J.McCUSKER	DATE 9-27-11	N243 INDOOR/OUTDOOR SUBSTATION
PROJMGR F.JONES	DATE 9.23.11	ELECTRICAL
REQUESTER D.TRAN	DATE 9/26/11	MANHOLE NO. E17 DETAILS DEMOLITION & NEW WORK
R&QA	DATE	
SAFETY	DATE	
SUPERVISOR S.FRANKEL	DATE OCT 21 2011	SIZE D · CAGE CODE 25307 · REV A · A1---1001-E48
	DATE	SCALE NONE · INDEX · SHEET 1 OF 1

FILE NAME: A1---1001-E048_1_R7.DWG 9-21-11

60176753.0001

DWG: \\Vr2\TS2\Proj\ARDS\60176753 (K10018)_REDS - High Voltage\500 CAD\REDS_HV-WP1\W243-Substation\E\Sheet\A1---1001-E048_1_R#V.DWG Version: 17.1s (LMS Tech) User: pdden
DATE: Sep 23, 2011 - 5:27:54 pm

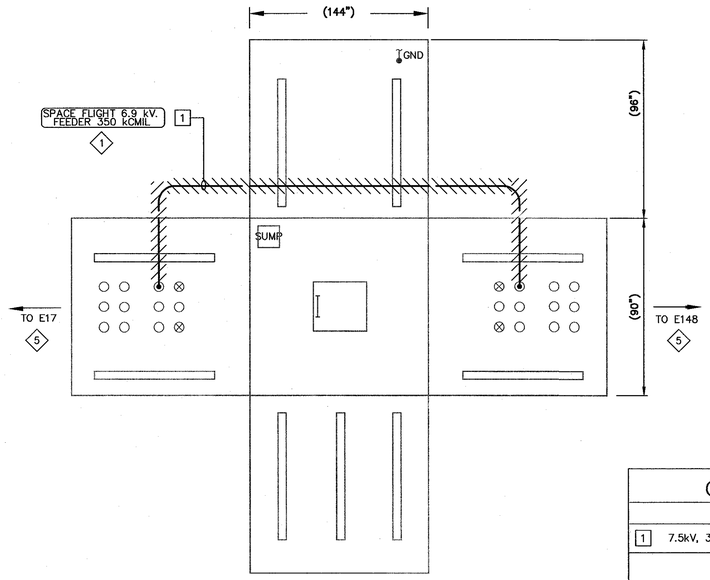

CABLE LEGEND	
	DESCRIPTION
1	7.5kV, 3-1/C-350kCMIL, VCL CABLE.

1 MANHOLE NO. E126 DETAIL – DEMOLITION
SCALE: NTS

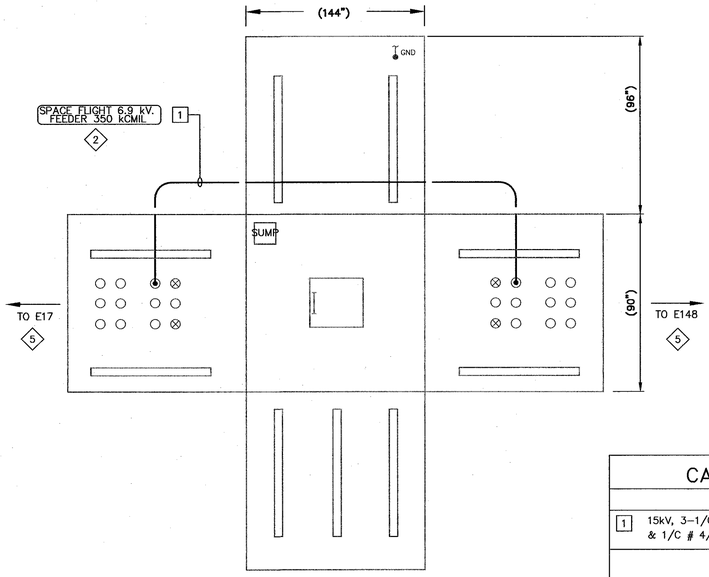

CABLE LEGEND	
	DESCRIPTION
1	15kV, 3-1/C-350kCMIL, 133% INS., EPR CABLE. & 1/C # 4/0 GND

2 MANHOLE NO. E126 DETAIL – NEW WORK
SCALE: NTS

SHEET NOTES

1. FOR GENERAL NOTES, SYMBOLS AND ABBREVIATIONS, SEE DRAWING G4.
2. SHEET NOTES #1,2,3 ARE NOT PART OF THIS CONTRACT (THE INTENTION IS FOR NASA 'IN-HOUSE' USE)
3. THIS DRAWING IS NOT THE CONTROLLED NASA AMES CONFIGURATION MANAGEMENT BASELINE DRAWING.
4. THE AMES CONFIGURATION MANAGEMENT BASELINE DRAWING THAT WAS USED TO CREATE THE PROJECT DRAWING IS A1---9801-E126.
5. NOT ALL CONDUITS AND CONDUCTORS ARE SHOWN ON DRAWING.
6. HATCHED LINES INDICATE EXISTING MATERIAL/EQUIPMENT TO BE DEMOLISHED AND REMOVED, U.O.N.
7. CONTRACTOR SHALL FIELD VERIFY ALL MEASUREMENTS AT THE SITE AND SHALL BE RESPONSIBLE FOR THEIR ACCURACY PRIOR TO STARTING ANY WORK OR ORDERING ANY MATERIAL.
8. UPON COMPLETION OF CABLE WORK AND PRIOR ENERGIZATIOIN, CONTRACTOR SHALL INFORM GOVERNMENT FOR TAKING AS-BUILT PHOTOS AND UPDATING OF NASA REFERENCE DWG.
9. NEW CABLE ROUTING INSIDE THE MANHOLE IS SHOWN DIAGRAMMATICALLY. EXACT CABLE ROUTING INSIDE MANHOLE SHALL BE IN ACCORDANCE WITH DWG E69.
10. FOR N243 INDOOR/OUTDOOR SUBSTATION SITE PLAN – EXISTING/DEMO AND NEW WORK SEE DRAWING E40.
11. LIGHT LINES INDICATE EXISTING CONDITION AND DARK LINES INDICATE NEW WORK.

KEY NOTES

1. DISCONNECT AND REMOVE EXISTING CABLE FROM SWITCH 475 TO N243 SUBSTATION VCB494/495 SWITCHGEAR VIA MH E16, MH E17, MH E126 & MH E148.
2. PROVIDE 15KV, 3-1/C-350kCMIL, 133 % INS., EPR CABLEAND 1/C #4/0 GND. INSTALL FEEDER IDENTIFICATION TAG & PHASE IDENTIFICATION COLOR TAPE.
3. ALL INFORMATION INCLUDED IN THIS DETAIL INCLUDING CABLE LEGEND REFENCES IS CONSIDERED AS EXISTING CONDITIONS BASED ON LATEST KNOWN EXISTING DWGS.
4. UPON COMPLETION OF CABLE WORK AND PRIOR ENERGIZATIOIN, CONTRACTOR SHALL INFORM GOVERNMENT FOR TAKING AS-BUILT PHOTOS AND UPDATING OF NASA REFERENCE DWG.
5. REFER TO DWG E48, FOR MANHOLE NO. E17 AND DWG E50 FOR MANHOLE NO. E148.

NASA REFERENCE DRAWINGS

A1---9808-E126 UNDERGROUND POWER DISTRIBUTION MH E126 DETAILS.

REGISTERED PROFESSIONAL ENGINEER
JAMES T. McCUSKER
No. ED13699
ELECTRICAL
STATE OF CALIFORNIA

Approved for Construction
Moffett Field Permit Board
Chief Building Official
Permit No. 11P038

ZONE	LETTER	DESCRIPTION	DRAWN	DATE	APPRVD

REVISIONS

DRAWN N.NIZAMOVA	DATE 9/21/11	Ames Research Center, Moffett Field, California
DESIGNED L.BELTRAN/N.NIZAMOVA	DATE 9/21/11	RESTORATION OF ELECTRICAL DISTRIBUTION SYSTEM-HIGH VOLTAGE WP1
CHECKED J.McCUSKER	DATE 9-21-11	N243 INDOOR/OUTDOOR SUBSTATION
PROJMGR F.JONES	DATE 9.23.11	ELECTRICAL
REQUESTER D.TRAN	DATE 9/22/11	MANHOLE NO. E126 DETAILS DEMOLITION & NEW WORK
R&QA	DATE	
SAFETY	DATE	
SUPERVISOR S.FRANKEL	DATE OCT 21 2011	SIZE D · CAGE CODE 25307 · A 1---1001-E49 · REV
	DATE	SCALE NONE · INDEX · SHEET 1 OF 1

FILE NAME: A1---1001-E049_1_R7.DWG 9-21-11

60176753.0001

DWG: \\N213FS2\Proj\REDS\60176753 (K10018)_REDS - High Voltage\500 CAD\REDS_HV-WP1\N243-Substation\E\Sheet\A1---1001-E049_1_R4V.DWG Version: 17.1s (LMS Tech) User: polden
DATE: Sep 20, 2011 - 5:27:59 pm

DWG NO. A1---1001-E50 | SH. 1 | REV

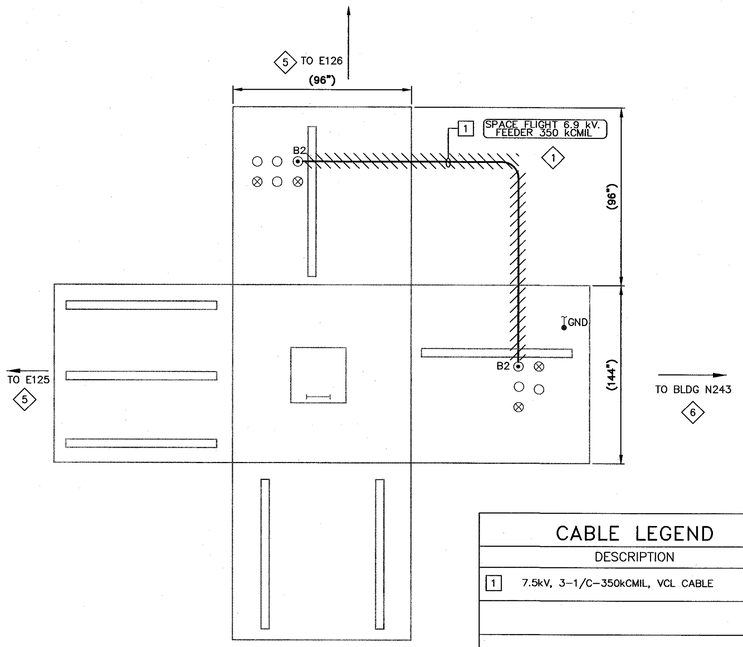

CABLE LEGEND	
DESCRIPTION	
1	7.5kV, 3-1/C-350kCMIL, VCL CABLE

1 MANHOLE NO. E148 DETAIL – DEMOLITION
SCALE: NTS
3 4

N

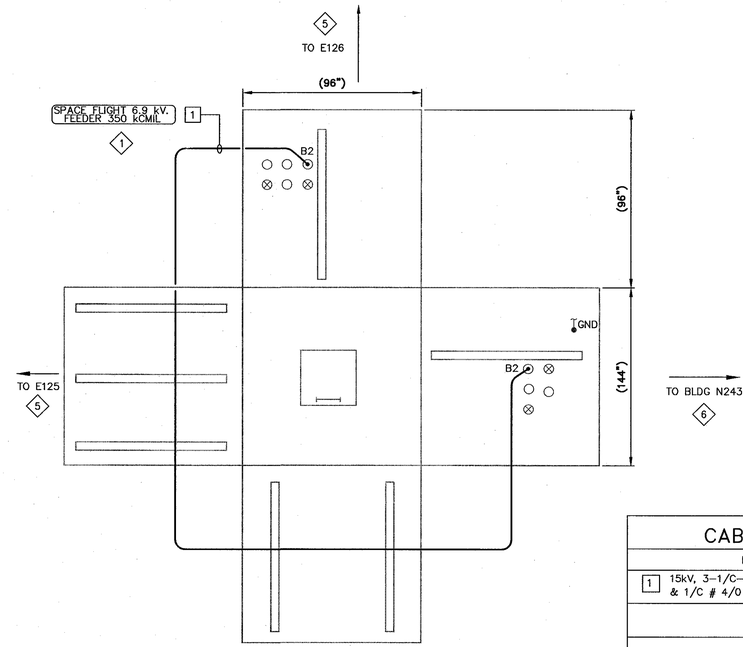

CABLE LEGEND	
DESCRIPTION	
1	15kV, 3-1/C-350kCMIL, 133% INS., EPR CABLE. & 1/C # 4/0 GND

2 MANHOLE NO. E148 DETAIL – NEW WORK
SCALE: NTS
3 4

N

SHEET NOTES

1. FOR GENERAL NOTES, SYMBOLS AND ABBREVIATIONS, SEE DRAWING G4.
2. SHEET NOTES #1,2,3 ARE NOT PART OF THIS CONTRACT (THE INTENTION IS FOR NASA 'IN-HOUSE' USE)
3. THIS DRAWING IS NOT THE CONTROLLED NASA AMES CONFIGURATION MANAGEMENT BASELINE DRAWING.
4. THE AMES CONFIGURATION MANAGEMENT BASELINE DRAWING THAT WAS USED TO CREATE THE PROJECT DRAWING IS A1---9801-E148.
5. NOT ALL CONDUITS AND CONDUCTORS ARE SHOWN ON DRAWING.
6. HATCHED LINES INDICATE EXISTING MATERIAL/EQUIPMENT TO BE DEMOLISHED AND REMOVED, U.O.N.
7. CONTRACTOR SHALL FIELD VERIFY ALL MEASUREMENTS AT THE SITE AND SHALL BE RESPONSIBLE FOR THEIR ACCURACY PRIOR TO STARTING ANY WORK OR ORDERING ANY MATERIAL.
8. UPON COMPLETION OF CABLE WORK AND PRIOR ENERGIZATOIN, CONTRACTOR SHALL INFORM GOVERNMENT FOR TAKING AS-BUILT PHOTOS AND UPDATING OF NASA REFERENCE DWG.
9. NEW CABLE ROUTING INSIDE THE MANHOLE IS SHOWN DIAGRAMMATICALLY. EXACT CABLE ROUTING INSIDE MANHOLE SHALL BE IN ACCORDANCE WITH DWG E69.
10. FOR N243 INDOOR/OUTDOOR SUBSTATION SITE PLAN – EXISTING/DEMO AND NEW WORK SEE DRAWING E40.
11. LIGHT LINES INDICATE EXISTING CONDITION AND DARK LINES INDICATE NEW WORK.

KEY NOTES

1. DISCONNECT AND REMOVE EXISTING CABLE FROM SWITCH 475 TO N243 SUBSTATION VCB494/495 SWITCHGEAR VIA MH E16, MH E17, MH E126 & MH E148.
2. PROVIDE 15kV, 3-1/C-350kCMIL, 133 % INS., EPR CABLE AND 1/C # 4/0 GND. INSTALL FEEDER IDENTIFICATION TAG & PHASE IDENTIFICATION COLOR TAPE.
3. ALL INFORMATION INCLUDED IN THIS DETAIL INCLUDING CABLE LEGEND REFENCES IS CONSIDERED AS EXISTING CONDITIONS BASED ON LATEST KNOWN EXISTING DWGS.
4. UPON COMPLETION OF CABLE WORK AND PRIOR ENERGIZATOIN, CONTRACTOR SHALL INFORM GOVERMENT FOR TAKING AS-BUILT PHOTOS AND UPDATING OF NASA REFERENCE DWG.
5. REFER TO DWG E49, FOR MANHOLE NO. E126 DETAILS.
6. REFER TO DWGS E41 & E42 FOR N243 SUBSTATION PLANS, EXIST/DEMO & NEW WORK.

NASA REFERENCE DRAWINGS

A1---9808-E148 UNDERGROUND POWER DISTRIBUTION MH E148 DETAILS.

REGISTERED PROFESSIONAL ENGINEER
JAMES T. McCUSKER
No. E013699
ELECTRICAL
STATE OF CALIFORNIA

Approved for Construction
Moffett Field Permit Board
Chief Building Official
Permit No. 11P038

ZONE	LETTER	DESCRIPTION	DRAWN	DATE	APPRVD

REVISIONS

DRAWN	N.NIZAMOVA	DATE 9/21/11
DESIGNED	L.BELTRAN/N.NIZAMOVA	DATE 9/21/11
CHECKED	J.McCUSKER	DATE 9-21-11
PROJMGR	F.JONES	DATE 9.23.11
REQUESTER	D.TRAN	DATE 9.23.11
R&QA		DATE
SAFETY		DATE
SUPERVISOR	S.FRANKEL	DATE OCT 21 2011
		DATE

Ames Research Center
Moffett Field, California

RESTORATION OF ELECTRICAL DISTRIBUTION SYSTEM-HIGH VOLTAGE WP1
N243 INDOOR/OUTDOOR SUBSTATION
ELECTRICAL

MANHOLE NO. E148 DETAILS DEMOLITION & NEW WORK

SIZE	CAGE CODE	REV
D	25307	A
SCALE	NONE	INDEX

SHEET 1 OF 1

FILE NAME: A1---1001-E050_1_R7.DWG 9-21-11

60176753.0001

DWG: \\W215PS2\Proj\KEDS\60176753 (K1001B)_KEDS - High Voltage\300 CAD\KEDS_HV-WP1\N243-Substation\E\Sheet\A1---1001-E050_1_R4V.DWG Version: 17.1s (LMS Tech) User: palden
DATE: Sep 20, 2011 - 2:26:03 pm

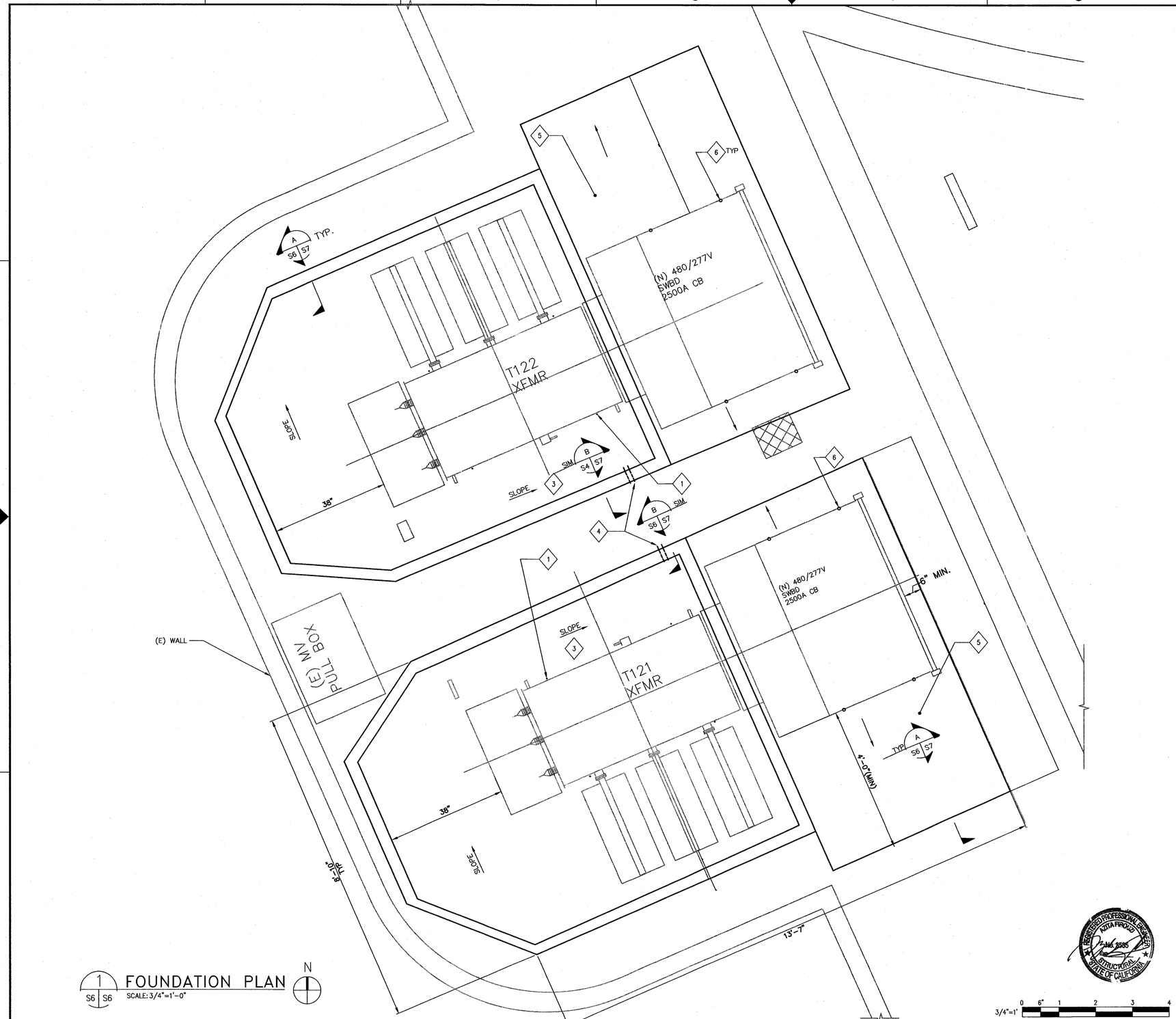

1 FOUNDATION PLAN
S6 S6
SCALE: 3/4"=1'-0"

SHEET NOTES

1. FOR GENERAL STRUCTURAL NOTES, SYMBOLS AND ABREVIATIONS SEE DRAWING S1.

KEY NOTES

1. 4-5/8"ø STAINLESS STEEL BOLTS W/ HILTI RE500-SD ADHESIVE ANCHOR MIN. 8" EMBEDMENT, COORDINATE ANCHOR BOLT, MEMBERS AND LOCATION WITH EQUIPMENT'S MANUFACTURER DRAWINGS.
2. NOT USED.
3. SLOPE CONCRETE PAD 1/8" PER FOOT OUTSIDE FOOT PRINT OF TRANSFORMER TO DRAIN OUTLET.
4. BRASS GATE "DRAIN" VALVE TYP OF TWO LOCATIONS.
5. SIX INCH THICK CONCRETE SLAB PLACED ON (E) CONCRETE PAD, SEE A/S7.
6. 1/2"ø THREADED ROD W/ HILTI RE-500 SD ADHESIVE ANCHOR, MIN. 8" EMBEDMENT (TOTAL OF 4 PER EQUIPMENT/CABINET UNO)

KEY PLAN

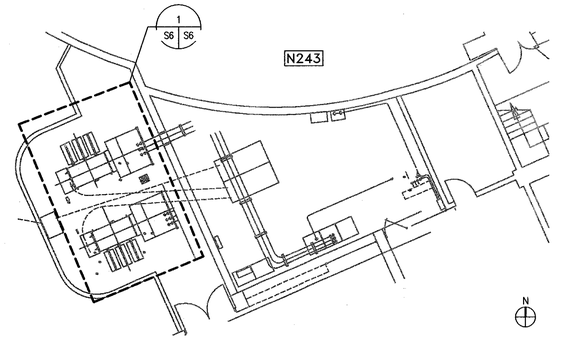

Approved for Construction
Moffett Field Permit Board

Chief Building Official
Permit No. 11P038

ZONE	LETTER	DESCRIPTION	DRAWN	DATE	APPRVD

REVISIONS

DRAWN F.BONALDI	DATE 9.22.11	**Ames Research Center** Moffett Field, California
DESIGNED A.FIROUZI	DATE 9.22.11	RESTORATION OF ELECTRICAL DISTRIBUTION SYSTEM-HIGH VOLTAGE WP1 N243 INDOOR/OUTDOOR SUBSTATION STRUCTURAL
CHECKED N.SHAH	DATE 9.22.11	FOUNDATION PLAN
PROJMGR F.JONES	DATE 9.23.11	
REQUESTER D.TRAN	DATE 9.26.11	
R&QA	DATE	
SAFETY	DATE	
SUPERVISOR S.FRANKEL	DATE OCT 21 2011	SIZE D · CAGE CODE 25307 · A 1---1001-S6 · REV
	DATE	SCALE AS SHOWN · INDEX · SHEET 1 OF 1

FILE NAME: A1---1001-S006_1_R7B.DWG 9-21-11

60176753.0001

DWG: \\N213FS2\Proj\REDS\60176753 (K10018)_REDS - High Voltage\500 CAD\REDS_HV-WP1\N243-Substation\S\Sheet\A1---1001-S006_1_RHV.dwg Version: 17.1s (LMS Tech) User: palden
DATE: Sep 20, 2011 - 5:28:09 pm

DWG NO. A1---1001-S7 | SH. 1 | REV

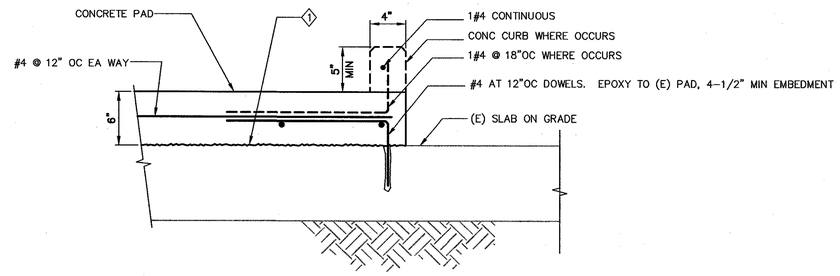

A S6 S7 TYPICAL PAD INSTALLED ON TOP OF (E) CONCRETE PAD

SCALE: 1 1/2"=1'-0"

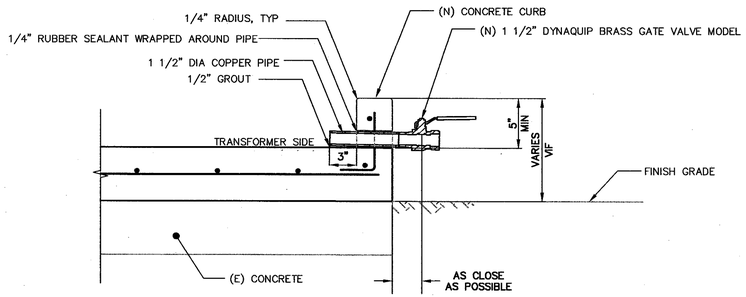

B S6 S7 SECTION THROUGH DRAIN OPENING

SCALE: 1 1/2"=1'-0"

SHEET NOTES

1. FOR GENERAL STRUCTURAL NOTES, SYMBOLS AND ABREVIATIONS SEE DRAWING S1.

KEY NOTES

1 ROUGHEN THE SURFACE OF (E) CONCRETE SLAB ON GRADE PRIOR OF POURING CONCRETE.

Approved for Construction
Moffett Field Permit Board

Chief Building Official
Permit No. 11P038

ZONE	LETTER	DESCRIPTION	DRAWN	DATE	APPRVD
REVISIONS					

DRAWN F.BONALDE	DATE 9.22.11	Ames Research Center, Moffett Field, California
DESIGNED A.FIROUZ	DATE 9.22.11	RESTORATION OF ELECTRICAL DISTRIBUTION SYSTEM-HIGH VOLTAGE WP1 N243 INDOOR/OUTDOOR SUBSTATION STRUCTURAL
CHECKED N.SHAH	DATE 9.22.11	SECTIONS
PROJMGR F.JONES	DATE 9.23.11	
REQUESTER D.TRAN	DATE 9.26.11	
R&QA	DATE	
SAFETY	DATE	
SUPERVISOR S.FRANKEL OCT 21 2011	DATE	SIZE D · CAGE CODE 25307 · A1---1001-S7 · REV · SCALE AS SHOWN · INDEX · SHEET 1 OF 1

FILE NAME: A1---1001-S7_1_R7B.DWG 9-21-11

1-1/2"=1' (12" 9" 6" 3" 0 1)

60176753.0001

DWG: \\W21SFS2\Proj\REDS\60176753 (K10018)_REDS - High Voltage\500 CAD\REDS_HV-WP1\W243-Substation\S\Sheet\A1---1001-S007_1_RHV.dwg Version: 17.1s (LMS Tech) User: pdden
DATE: Sep 20, 2011 - 2:26:13 pm

DWG NO.	SH.	REV
A1---1001-E51	1	

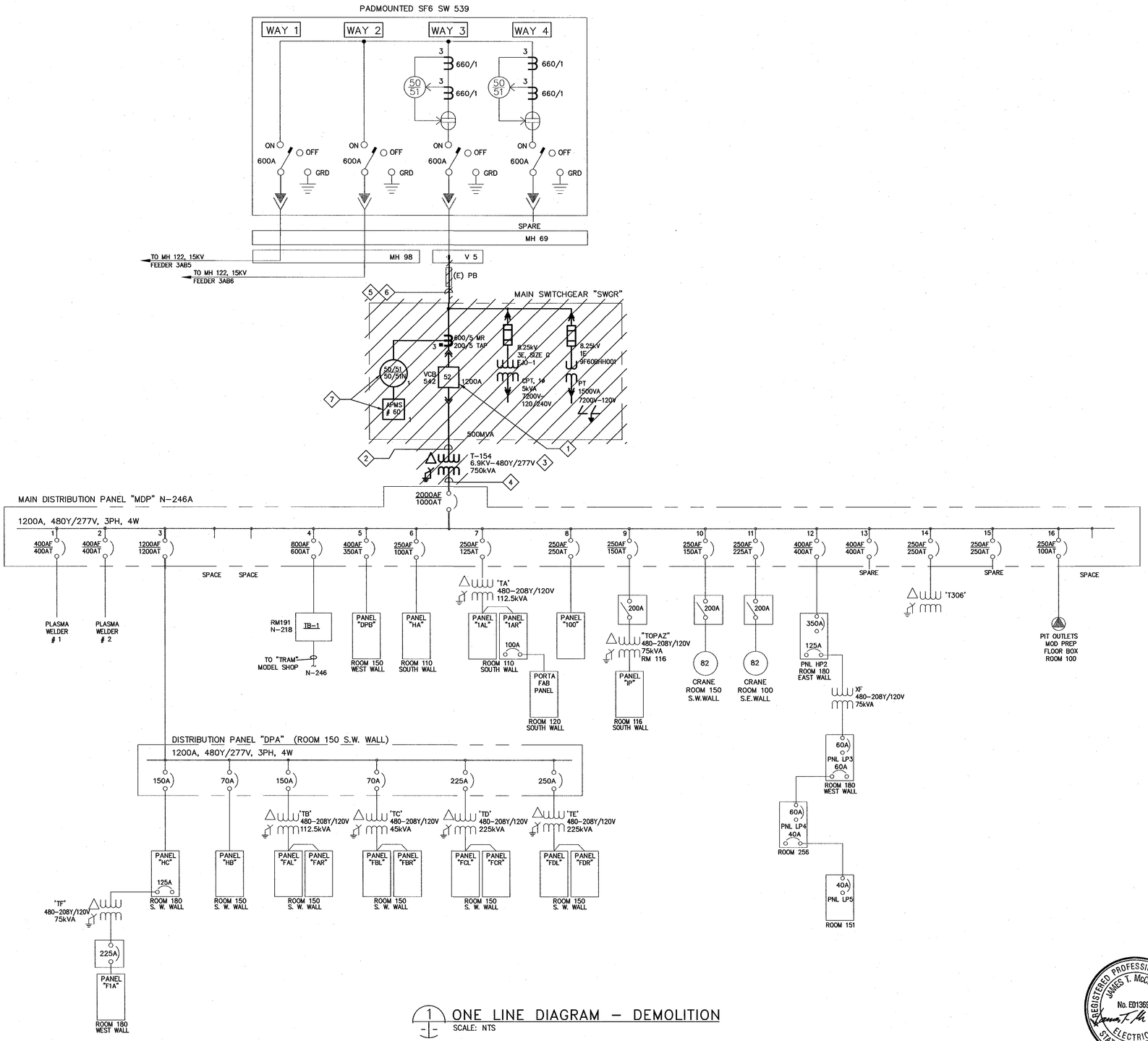

1 ONE LINE DIAGRAM – DEMOLITION
SCALE: NTS

SHEET NOTES

1. FOR GENERAL NOTES, SYMBOLS AND ABBREVIATIONS, SEE DRAWING G4.
2. NOT ALL CONDUITS AND CONDUCTORS ARE SHOWN ON THE DRAWING.
3. SINGLE LINE DIAGRAM IS BASED ON THE LATEST KNOWN EXISTING DRAWINGS.
4. HATCHED LINES INDICATE EXISTING MATERIAL AND EQUIPMENT TO BE DEMOLISHED/ REMOVED, U.O.N.
5. PRIOR TO SHUTDOWN AND DEMOLITION WORK, CONTRACTOR SHALL PERFORM PHASE SEQUENCE TEST ON EXISTING SYSTEM IN THE PRESENCE OF THE CONTRACTING OFFICER. ALL DISCONNECTED CABLES THAT ARE TO REMAIN SHALL BE PROPERLY IDENTIFIED, TAGGED FOR RESTORATION IN NEW WORK.

KEY NOTES

1. REMOVE EXISTING 6.9kV PRIMARY SWITCHGEAR AND CIRCUIT BREAKER VCB542 AND ALL ASSOCIATED EQUIPMENT AND DEVICES.
2. REMOVE CONNECTION BETWEEN VCB542 AND TRANSFORMER T154.
3. REMOVE EXISTING TRANSFORMER T154 AND ALL ASSOCIATED EQUIPMENT AND DEVICES. SEE DRAWING E54 FOR LAYOUT.
4. REMOVE CONNECTION BETWEEN TRANSFORMER T154 AND LV MAIN DISTRIBUTION SWITCHBOARD.
5. REMOVE (E) 4" CONDUIT FROM SWITCHGEAR UP TO THE (E) WALL OF BLDG N24A.
6. DISCONNECT AND PULL (E) 15kV CABLE BETWEEN (E) VCB 452 AND VAULT 5 AT N218A.
7. REMOVE, PROTECT FROM DAMAGE AND TURN OVER TO THE GOVERNMENT.

Approved for Construction
Moffett Field Permit Board

Chief Building Official
Permit No. 11P038

ZONE	LETTER	DESCRIPTION	DRAWN	DATE	APPRVD

REVISIONS

DRAWN N.NIZAMOVA	DATE 9/21/11	Ames Research Center, Moffett Field, California
DESIGNED N.NIZAMOVA	DATE 9/21/11	RESTORATION OF ELECTRICAL DISTRIBUTION SYSTEM–HIGH VOLTAGE WP1
CHECKED J.McCUSKER	DATE 9-21-11	N246 INDOOR SUBSTATION
PROJMGR F.JONES	DATE 9.23.11	ELECTRICAL
REQUESTER D.TRAN	DATE 9.21.11	ONE LINE DIAGRAM DEMOLITION
R&QA	DATE	
SAFETY	DATE	
SUPERVISOR S.FRANKEL	DATE OCT 21 2011	

SIZE D | CAGE CODE 25307 | A 1---1001-E51 | REV
SCALE | INDEX | SHEET 1 OF 1
FILE NAME: A1---1001-E051_1_RHV.DWG 9-21-11

60176753.0001

DWG: \\Rf213fs2\Proj\REEDS\60176753 (K10018)_REEDS - High Voltage\500 CAD\REEDS_HV-WP1\W246A-Substation\E\Sheet\A1---1001-E051_1_RHV.dwg Version: 17.1s (LMS Tech) User: pdden
DATE: Sep 20, 2011 - 5:28:18 pm

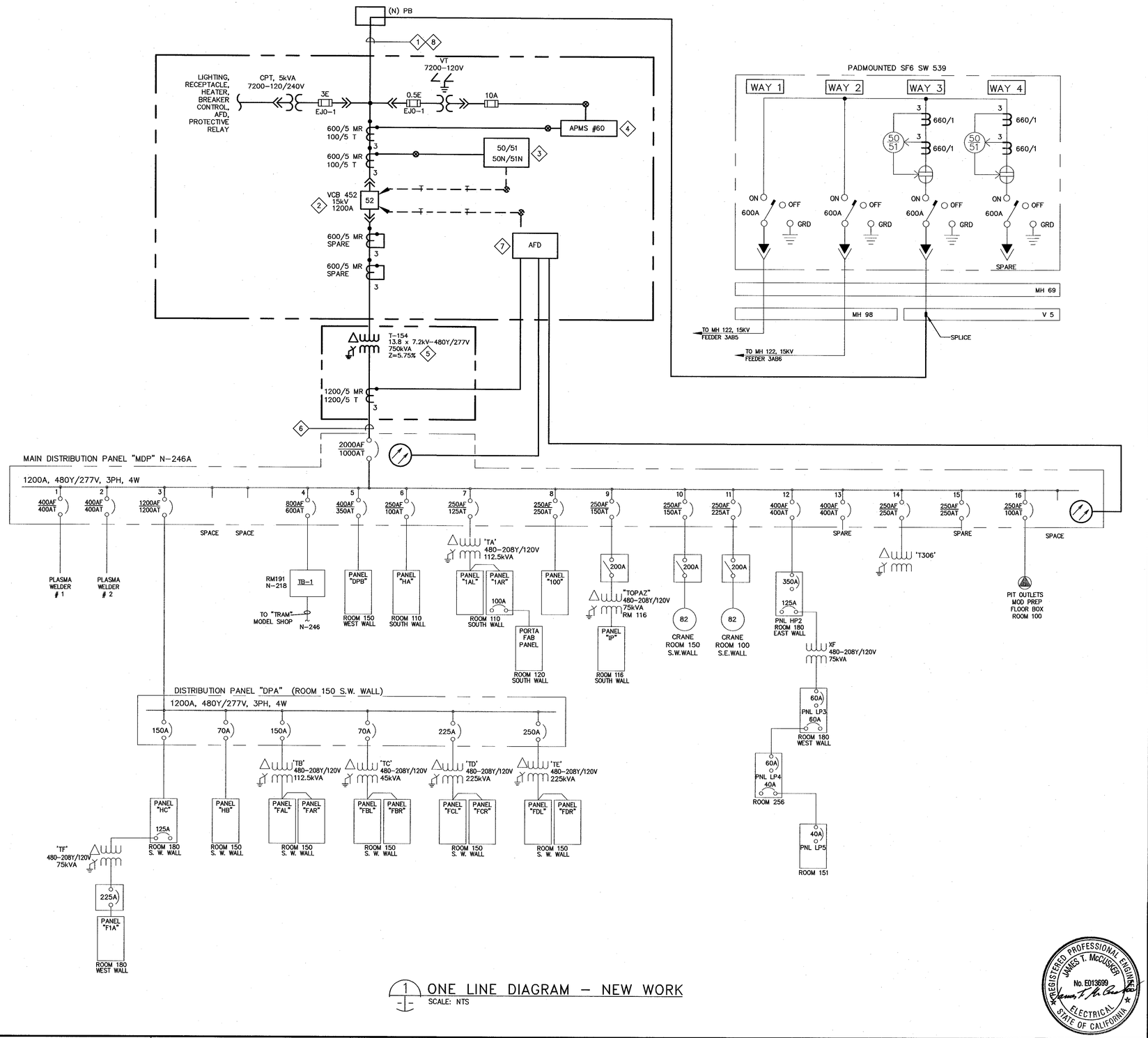

1 ONE LINE DIAGRAM – NEW WORK
SCALE: NTS

SHEET NOTES

1. FOR GENERAL NOTES, SYMBOLS AND ABBREVIATIONS, SEE DRAWING G4.
2. SINGLE LINE DIAGRAM IS BASED ON THE LATEST KNOWN EXISTING NASA DRAWING.
3. LIGHT LINES DENOTE EXISTING MATERIAL/ EQUIPMENT TO REMAIN.
4. ALL INDOOR EQUIPMENT TO BE RATED FOR USE IN NEMA 12 ENVIRONMENT, MINIMUM.
5. NOT ALL CONDUITS AND CONDUCTORS ARE SHOWN ON DWG.
6. DARK OR HEAVY LINES INDICATE NEW MATERIAL/EQUIPMENT TO BE PROVIDED. U.O.N.
7. THE DIAGRAM IS PROVIDED FOR GUIDANCE ONLY. THE CONTRACTOR SHALL FIELD VERIFY ALL EXISTING EQUIPMENT INCLUDING TERMINAL BLOCKS, TERMINAL IDENTIFICATION NUMBER, CONNECTIONS ETC. AND REVISE DRAWINGS AS NEEDED TO MATCH EXISTING AND NEW EQUIPMENT TO PROVIDE A COMPLETE FUNCTIONAL SYSTEM.
8. ALL CT WIRES SHALL BE #10 AWG MINIMUM, TYPE SIS. ALL VOLTAGE, CPT SECONDARY AND BREAKER TRIP WIRES SHALL BE #12 AWG MINIMUM, TYPE SIS. U.O.N.
9. CONTRACTOR SHALL FIELD VERIFY ALL EQUIPMENT RATING PRIOR TO ORDERING ANY MATERIALS.
10. CPT AND VT'S SHALL BE DRAWOUT TYPE.
11. SEE DRAWING E58 FOR THREE LINE DIAGRAM AND E59 FOR BREAKER CONTROL DIAGRAM.
12. SEE DRAWING E63 FOR NAMEPLATE SCHEDULE.

KEY NOTES

1. PROVIDE (N) 15kV, 3–1/C 350KCMIL, 133% INSULATION, EPR CABLE AND 1/C #4/0 GND FROM VAULT 5 ON BLDG N218A AND CONNECT TO NEW VCB542 AS SHOWN.
2. PROVIDE NEW 15kV, 1200A SWITCHGEAR WITH VACUUM CIRCUIT BREAKER VCB542, CPT, VT AND ALL ACCESSORIES PER SPECIFICATION SECTION 26 13 00.00 20.
3. INSTALL GFE ALSTOM RELAY COMPLETELY WIRED INTO THE NEW SWITCHGEAR. INSTALLATION SHALL BE IN ACCORDANCE WITH DRAWINGS E64 & E68.
4. INSTALL GFE 3–PHASE DIGITAL POWER METER COMPLETELY WIRED INTO THE NEW SWITCHGEAR. INSTALLATION SHALL BE IN ACCORDANCE WITH DRAWING E64 & 68.
5. PROVIDE NEW INDOOR DRY TYPE TRANSFORMER T154, ELECTROSTATIC SHIELDED, TOTALLY ENCLOSED, INCLUDING ALL ACCESSORIES PER SPECIFICATION SECTIONS 26 11 16 & 26 12 00.00 40.
6. PROVIDE 1200A CONNECTION BETWEEN TRANSFORMER T154 AND (E) LV MAIN DISTRIBUTION SWITCHBOARD.
7. INSTALL ARC FLASH DETECTOR COMPLETELY WIRED INTO THE NEW SWITCHGEAR. INSTALLATION SHALL BE IN ACCORDANCE WITH MANUFACTURER'S RECOMENDATIONS.
8. PROVIDE 4" RSC FROM (E) PULL BOX TO NEW MEDIUM VOLTAGE SWITCHGEAR VCB542 AS SHOWN ON THE DRAWING.

Approved for Construction
Moffett Field Permit Board
Chief Building Official
Permit No. 11P038

ZONE	LETTER	DESCRIPTION	DRAWN	DATE	APPRVD

REVISIONS

REGISTERED PROFESSIONAL ENGINEER JAMES T. McCUSKER No. E013699 ELECTRICAL STATE OF CALIFORNIA

DRAWN N.NIZAMOVA		DATE 9/21/11
DESIGNED N.NIZAMOVA		DATE 9/21/11
CHECKED J.McCUSKER		DATE 9-21-11
PROJMGR F.JONES		DATE 9.23.11
REQUESTER D.TRAN		DATE 9/26/11
R&QA		DATE
SAFETY		DATE
SUPERVISOR S.FRANKEL	OCT 31 2011	DATE

Ames Research Center
Moffett Field, California

RESTORATION OF ELECTRICAL DISTRIBUTION SYSTEM–HIGH VOLTAGE WP1
N246 INDOOR SUBSTATION
ELECTRICAL

ONE LINE DIAGRAM
NEW WORK

SIZE	CAGE CODE	DWG NO.	REV
D	25307	A1–––1001–E52	
SCALE	NTS	INDEX	SHEET 1 OF 1

FILE NAME: A1–––1001–E052_1_RHV.DWG 9–21–11

60176753.0001

DWG: \\N213FS2\Proj\REDS\60176753 (K10016)_REDS – High Voltage\500 CAD\REDS_HV–WP1\N246A–Substation\S\Sheet\A1–––1001–E052_1_RHV.dwg Version: 17.1s (LMS Tech) User: polden
DATE: Sep 20, 2011 – 2:26:2 pm

DWG NO.	SH.	REV
A1---1001-E53	1	

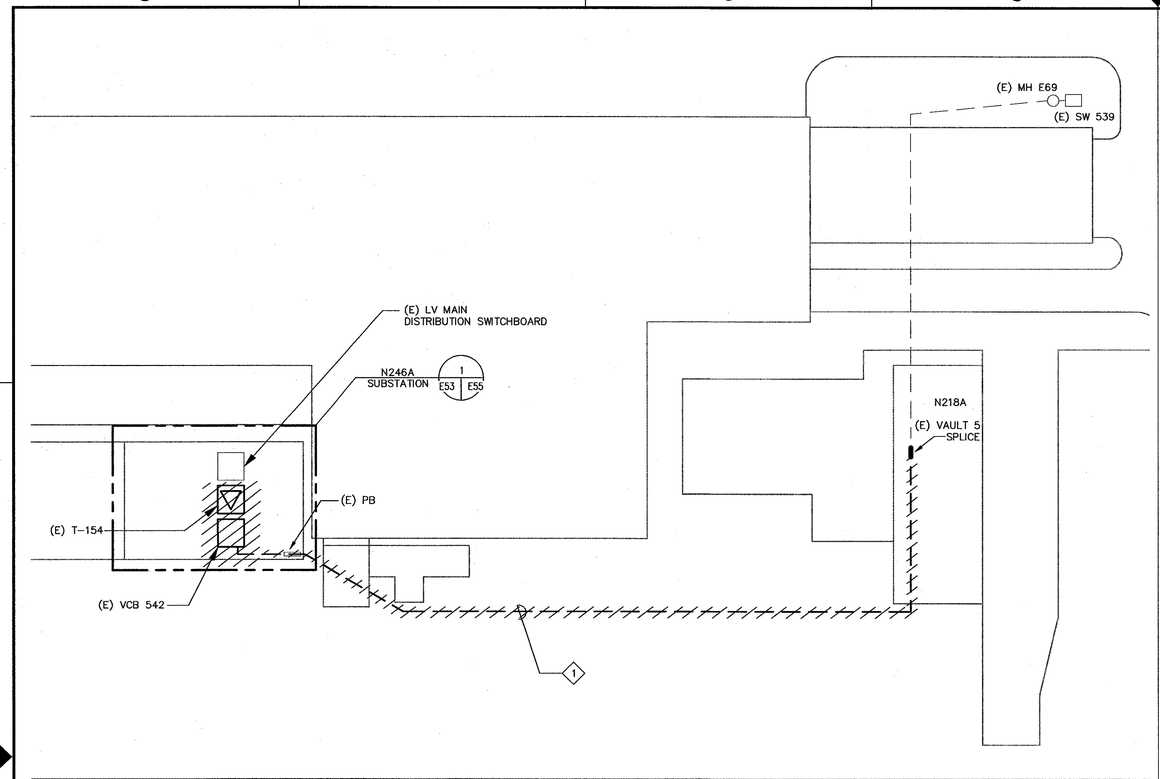

1 SITE PLAN – DEMOLITION
SCALE: 1"=30'

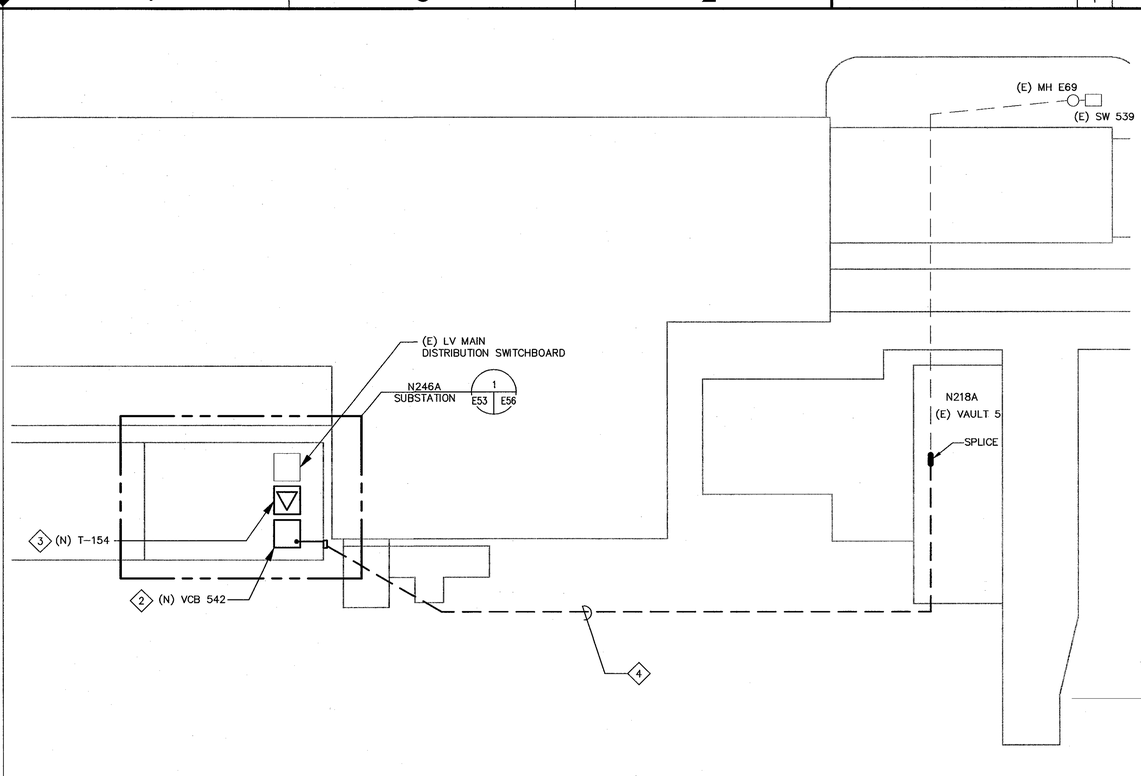

2 SITE PLAN – NEW WORK
SCALE: 1"=30'

SHEET NOTES

1. FOR GENERAL NOTES, SYMBOLS AND ABBREVIATIONS, SEE DRAWING G4.
2. NOT ALL CONDUITS AND CONDUCTORS ARE SHOWN ON THE DWG.
3. HATCHED LINES INDICATE EXISTING MATERIAL/EQUIPMENT TO BE DEMOLISHED AND REMOVED, U.O.N.
4. CONTRACTOR SHALL FIELD VERIFY ALL MEASUREMENTS AT THE SITE AND SHALL BE RESPONSIBLE FOR THEIR ACCURACY PRIOR TO STARTING ANY WORK OR ORDERING ANY MATERIAL.

KEY NOTES

1. DISCONNECT AND PULL OUT (E) 15kV CABLES BETWEEM EXISTING 1200A SWGR AND VAULT 5.
2. PROVIDE NEW 15kV, 1200A SWITCHGEAR WITH VACUUM CIRCUIT BREAKER VCB542, CPT, VT AND ALL ACCESSORIES PER SPECIFICATION SECTION 26 13 00.00 20.
3. PROVIDE NEW INDOOR DRY TYPE TRANSFORMER T154, ELECTROSTATIC SHIELDED, TOTALLY ENCLOSED, INCLUDING ALL ACCESSORIES PER SPECIFICATION SECTIONS 26 11 16 & 26 12 00.00 40.
4. PROVIDE NEW 15 KV, 3-1/C #350 KCMIL 133% INSULATION, EPR CABLE AND 1/C #4/0 GND FROM VAULT 5 TO NEW 1200A SWITCHGEAR LOCATION AS SHOWN.

REGISTERED PROFESSIONAL ENGINEER
JAMES T. McCUSKER
No. E013699
ELECTRICAL
STATE OF CALIFORNIA

1"=30'-0" 0 15 30 60 90

Approved for Construction
Moffett Field Permit Board
Chief Building Official
Permit No. 11P038

ZONE	LETTER	DESCRIPTION	DRAWN	DATE	APPRVD

REVISIONS

DRAWN N.NIZAMOVA		DATE 9/21/11
DESIGNED N.NIZAMOVA		DATE 9/21/11
CHECKED J.McCUSKER		DATE 9-21-11
PROJMGR F.JONES		DATE 9-22-11
REQUESTER D.TRAN		DATE 9/26/11
R&QA		DATE
SAFETY		DATE
SUPERVISOR S.FRANKEL		DATE OCT 21 2011
		DATE

Ames Research Center
Moffett Field, California

RESTORATION OF ELECTRICAL DISTRIBUTION SYSTEM–HIGH VOLTAGE WP1
N246 INDOOR SUBSTATION
ELECTRICAL

SITE PLANS DEMOLITION & NEW WORK

SIZE	CAGE CODE	REV
D	25307	A 1---1001-E53
SCALE	INDEX	SHEET 1 OF 1

FILE NAME: A1---1001-053_1_RHV.DWG 9-21-11

60176753.0001

DWG: \\N213FS2\Proj\REDS\60176753 (K10018)_REDS - High Voltage\500 CAD\REDS_HV-WP1\N246A-Substation\E\Sheet\A1---1001-E053_1_RHV.dwg Version: 17.1s (LMS Tech) User: palden
DATE: Sep 20, 2011 - 5:28:28 pm

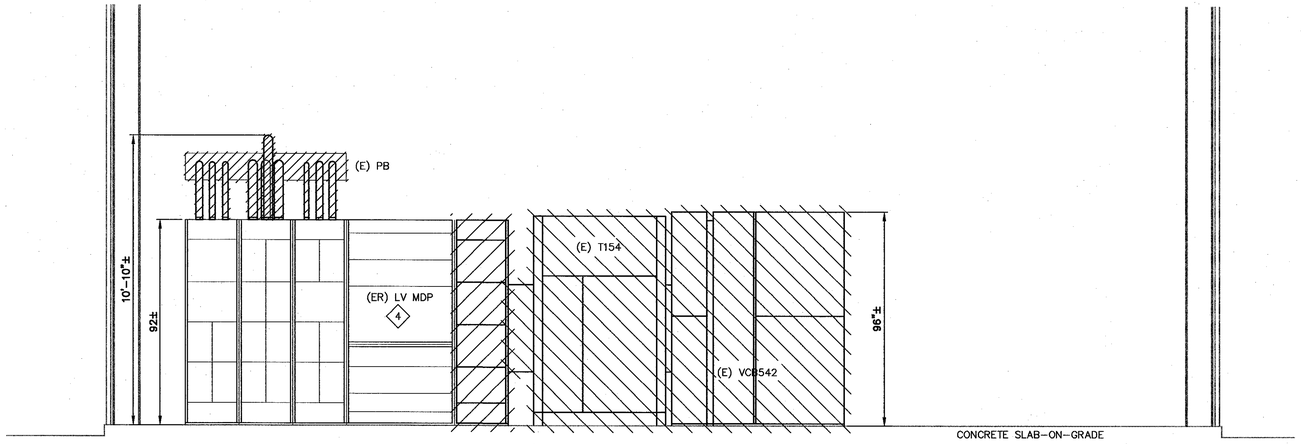

A / E54 | E54 ELEVATION – DEMOLITION
SCALE: 3/8"=1'-0"

3/8"=1' 0 1 2 4 6 8

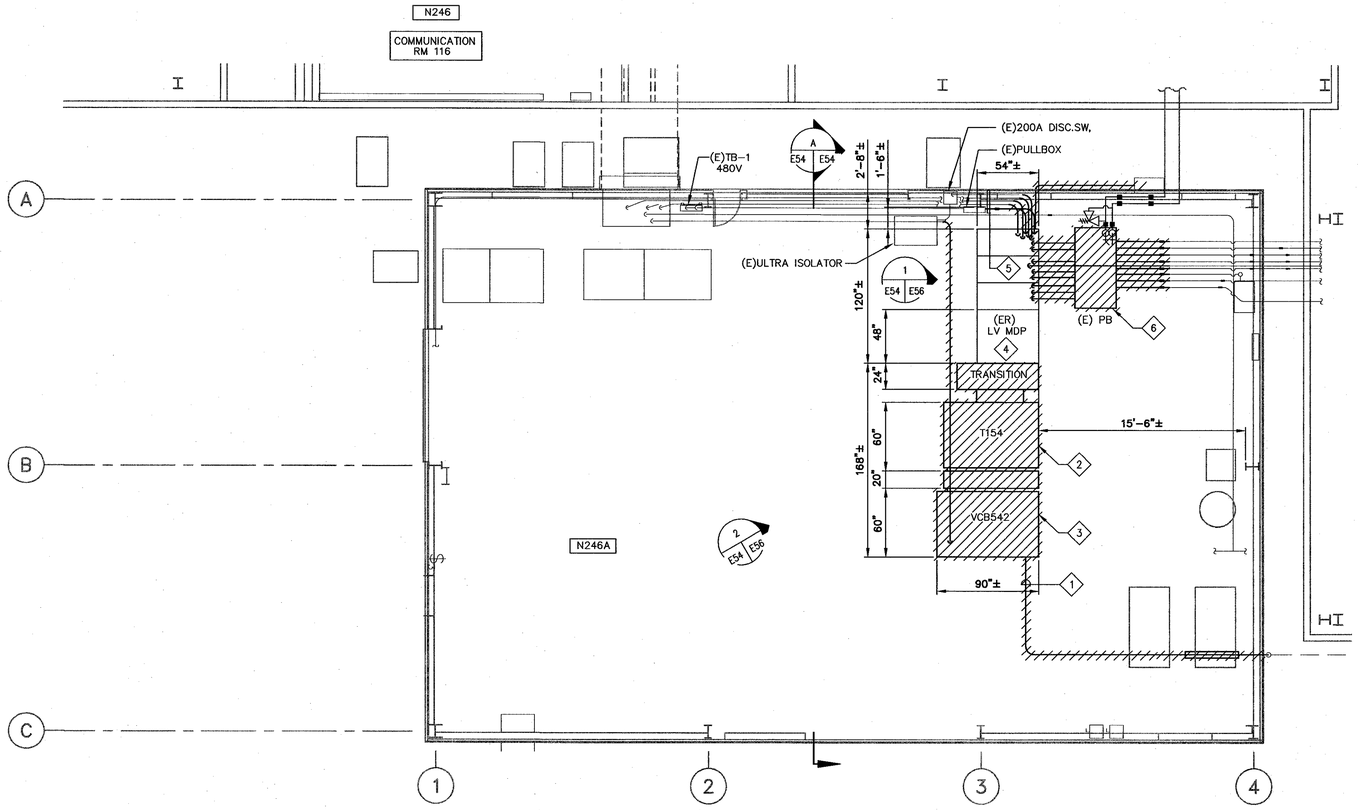

1 / E53 | E54 EQUIPMENT PLAN – DEMOLITION
SCALE: 3/16"=1'-0"

N

3/16"=1' 0 2 4 8 12 16

SHEET NOTES

1. FOR GENERAL NOTES, SYMBOLS AND ABBREVIATIONS, SEE DRAWING G4.
2. HATCHED LINES INDICATE EXISTING MATERIAL/EQUIPMENT TO BE DEMOLISHED AND REMOVED U.O.N.
3. (E) INDOOR VCB080 SWITCHGEAR AND TRANSFORMER T14 SHALL BE REMOVED AND REPLACED WITH NEW. CONTRACTOR SHALL FIELD VERIFY ALL MEASUREMENTS AT THE SITE AND SHALL BE RESPONSIBLE FOR THEIR ACCURACY PRIOR TO STARTING ANY WORK OR ORDERING ANY MATERIAL. PROVIDE NEW VACUUM CIRCUIT BREAKER SWITCHGEAR AND TRANSFORMER TO FIT IN THE EXISTING AVAILABLE SPACE.
4. ALL EXISTING CONDUITS AND CONDUCTORS SHALL BE DISCONNECTED FROM (E) EQUIPMENT AND RECONNECTED TO NEW EQUIPMENT, CONTRACTOR SHALL DETERMINE IN FIELD AND PROVIDE PULL BOXES AND RELOCATE/EXTEND OR REPLACE (E) CONDUITS AND CONDUCTORS (MATCH EXISTING SIZE) TO COMPLETE CONNECTIONS TO NEW AND EXISTING EQUIPMENT.
5. EXISTING GROUNDING SYSTEM TO REMAIN FOR RECONNECTION IN NEW WORK.
6. PRIOR TO SHUTDOWN AND DEMOLITION WORK, CONTRACTOR SHALL PERFORM PHASE SEQUENCE TEST ON EXISTING SYSTEM/EQUIPMENT IN THE PRESENCE OF COTR.

KEY NOTES

1. PULL THE (E) MV CABLES BACK TO VAULT 5 LOCATED AT N218A. REMOVE PARTIAL OF (E) 4" CONDUIT UP TO THE WALL.
2. REMOVE (E) TRANSFORMER T154 AND ASSOCIATED EQUIPMENT.
3. REMOVE (E) 8kV VCB542 SWITCHGEAR AND ALL ASSOCIATED EQUIPMENT.
4. (E) EQUIPMENT TO BE RELOCATED. SEE E55 FOR NEW LOCATION.
5. DISCONNECT EXISTING WIRES FROM (E) LV MDP AND PARTIALLY DEMOLISH EXISTING CONDUIT AT APPROXIMATELY 6 FT. FROM EXISTING LV MDP PANEL AS SHOWN.
6. (E) PULL BOX TO DEMOLISH.

Approved for Construction
Moffett Field Permit Board
S. Frankel
Chief Building Official
Permit No. 11P038

ZONE	LETTER	DESCRIPTION	DRAWN	DATE	APPRVD
		REVISIONS			

DRAWN N.NIZAMOVA	DATE 9/23/11	
DESIGNED N.NIZAMOVA	DATE 9/23/11	
CHECKED J.McCUSKER	DATE 9-22-11	
PROJMGR F.JONES	DATE 9.23.11	
REQUESTER D.TRAN	DATE 9/26/11	
R&QA	DATE	
SAFETY	DATE	
SUPERVISOR S.FRANKEL	DATE OCT 21 2011	
	DATE	

REGISTERED PROFESSIONAL ENGINEER
JAMES T. McCUSKER
No. E013699
ELECTRICAL
STATE OF CALIFORNIA

NASA
Ames Research Center
Moffett Field, California

RESTORATION OF ELECTRICAL DISTRIBUTION SYSTEM-HIGH VOLTAGE WP1
N246 INDOOR SUBSTATION
ELECTRICAL

EQUIPMENT PLAN AND ELEVATION DEMOLITION

SIZE	CAGE CODE	DWG NO.	REV
D	25307	A1---1001-E54	
SCALE		INDEX	SHEET 1 OF 1

FILE NAME: A1---1001-054_1_RHV.DWG 9-21-11

60176753.0001

DWG: \\W21SF2\Proj\REDS\60176753 (K10018)_REDS - High Voltage\500 CAD\REDS_HV-WP1\N246A-Substation\E\Sheet\A1---1001-E054_1_RHV.dwg Version: 17.1s (LMS Tech) User: polden
DATE: Sep 22, 2011 - 10:22:55 am

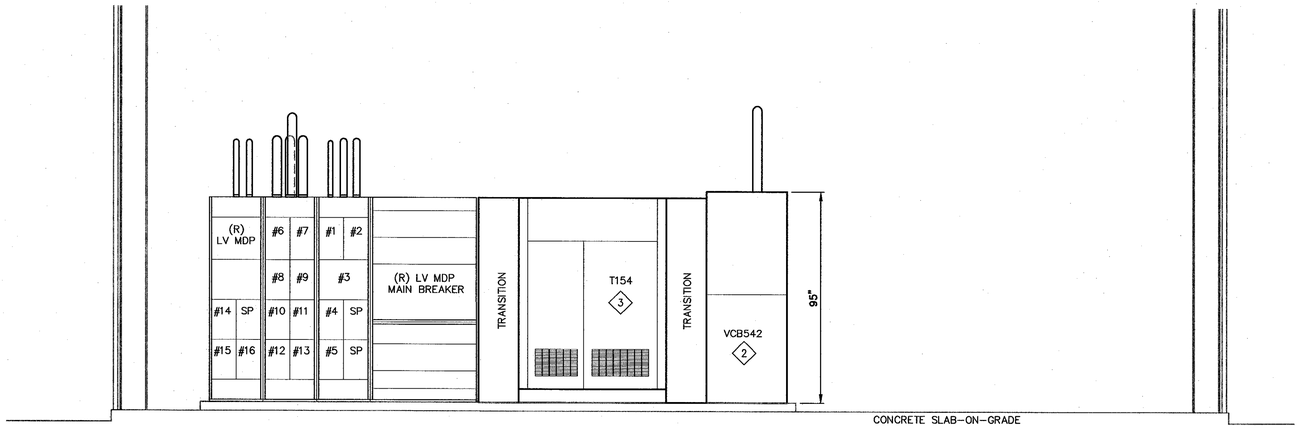

A ELEVATION – NEW WORK
E55 E55 SCALE: 3/8"=1'-0"

3/8"=1' 0 1 2 4 6 8

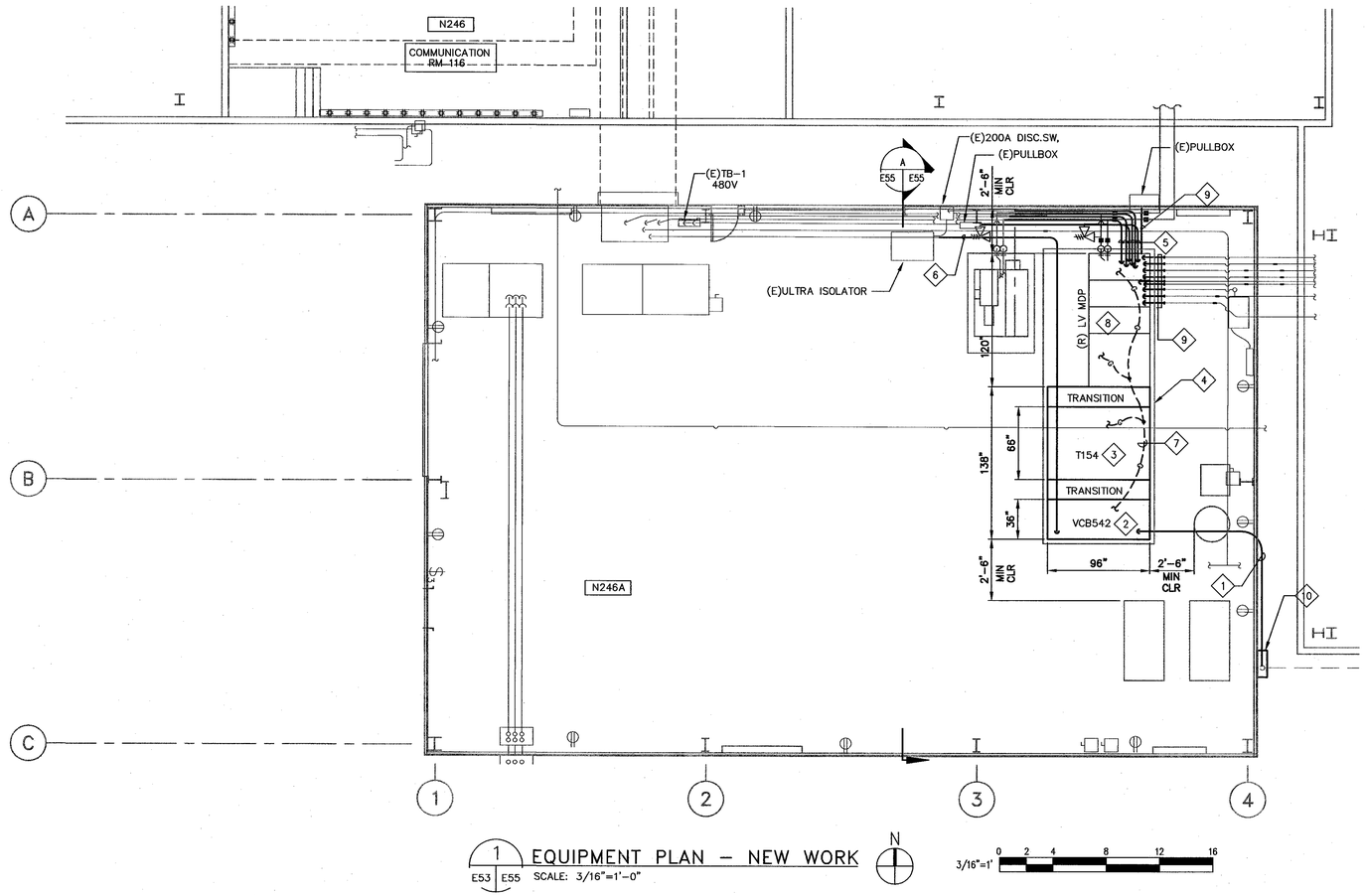

1 EQUIPMENT PLAN – NEW WORK
E53 E55 SCALE: 3/16"=1'-0"

N

3/16"=1' 0 2 4 8 12 16

SHEET NOTES

1. FOR GENERAL NOTES, SYMBOLS AND ABBREVIATIONS, SEE DRAWING G4.
2. HEAVY LINES INDICATE NEW MATERIAL/EQUIPMENT TO BE PROVIDED. LIGHT LINES DENOTE EXISTING CONDITIONS, MATERIALS AND EQUIPMENT TO REMAIN.
3. CONTRACTOR SHALL FIELD VERIFY ALL MEASUREMENTS AT THE SITE AND SHALL BE RESPONSIBLE FOR THEIR ACCURACY PRIOR TO STARTING ANY WORK OR ORDERING ANY MATERIAL.
4. ALL OUTDOOR EQUIPMENT SHALL BE NEMA 3R.
5. ALL EXISTING CONDUITS AND CONDUCTORS SHALL BE RECONNECTED TO NEW EQUIPMENT. CONTRACTOR SHALL DETERMINE IN THE FIELD AND PROVIDE PULL BOXES AND RELOCATE, EXTEND OR REPLACE (E) CONDUIT AND CONDUCTORS (MATCH EXISTING SIZE) TO COMPLETE CONNECTIONS TO NEW AND EXISTING EQUIPMENT.
6. DIMENSION SHOWN ARE FOR GUIDANCE ONLY. CONTRACTOR SHALL VERIFY CONDUIT STUB-UP & EQUIPMENT DIMENSIONS BEFORE INSTALLATION.
7. ELECTRICAL EQUIPMENT AND FEEDERS SHALL BE SUPPORTED AND/OR ANCHORED IN ACCORDANCE WITH CALIFORNIA BUILDING CODE SEISMIC REQUIREMENTS.

KEY NOTES

1. PROVIDE NEW 4"C FROM THE (N) PULLBOX TO NEW VCB542. CONNECT THE (N) 15kV 350kCMIL EPR CABLES AND #4/0 GND FROM N218A TO NEW SWITCHGEAR.
2. PROVIDE NEW 15kV, 1200A SWITCHGEAR WITH VACUUM CIRCUIT BREAKER VCB542, CPT, VT AND ALL ACCESSORIES PER SPECIFICATION SECTION 26 13 00.00 20.
3. PROVIDE NEW INDOOR DRY TYPE TRANSFORMER T154, ELECTROSTATIC SHIELDED, TOTALLY ENCLOSED, INCLUDING ALL ACCESSORIES PER SPECIFICATION SECTIONS 26 11 16 & 26 12 00.00 40.
4. PROVIDE 4" CONCRETE PAD FOR NEW SUBSTATION. SEE STRUCTURAL DRAWINGS FOR DETAILS.
5. EXTEND (E) CONDUIT AND WIRES AS NECESSARY FOR RECONNECTION TO RELOCATED LV MDP.
6. PROVIDE NEW CAT 5E WIRES FROM APMS TO COMMUNICATION ROOM #116 IN BLDG N246. PROVIDE ADDITIONAL 40 FEET OF CABLE AND RJ-45 CONNECTORS AT EACH END. NO SPLICING ON THIS CABLE, ETHERNET CABLE HOOK UP TO COMMUNICATION PANEL AND APMS WILL BE PERFORMED BY OTHERS. EXTEND (E) CONDUIT TO NEW APMS LOCATION AS NECESSARY.
7. CONNECT NEW EQUIPMENT TO EXISTING GROUNDING SYSTEM WITH # 4/0 AWG BARE COOPER GROUND CONDUCTOR.
8. RELOCATED (E) EQUIPMENT.
9. RECONNECT (E) CONDUIT AND WIRES AS NECESSARY TO RELOCATED LV MDP.
10. PROVIDE NEW PULLBOX 24" X 24" X 10"D, NEMA 3R ENCLOSURE WITH HINGED AND BOLTED FRONT PANEL COVER, MOUNTED AT APPROXIMATELY 12 FT ON CENTER A.F.F. PROVIDE ADEQUATE MOUNTING SUPPORT AS REQUIRED.

Approved for Construction
Moffett Field Permit Board
Chief Building Official
Permit No. 11P038

REGISTERED PROFESSIONAL ENGINEER
JAMES T. McCUSKER
No. ED13699
ELECTRICAL
STATE OF CALIFORNIA

ZONE	LETTER	DESCRIPTION	DRAWN	DATE	APPRVD

REVISIONS

DRAWN N.NIZAMOVA	DATE 9/22/11	
DESIGNED N.NIZAMOVA	DATE 9/22/11	
CHECKED J.McCUSKER	DATE 9-22-11	
PROJMGR F.JONES	DATE 9.23.11	
REQUESTER D.TRAN	DATE 9/26/11	
R&QA	DATE	
SAFETY	DATE	
SUPERVISOR S.FRANKEL	DATE OCT 27 2011	

Ames Research Center
Moffett Field, California

RESTORATION OF ELECTRICAL DISTRIBUTION SYSTEM-HIGH VOLTAGE WP1
N246 INDOOR SUBSTATION
ELECTRICAL

EQUIPMENT PLAN AND ELEVATION NEW WORK

SIZE	CAGE CODE	A 1---1001-E55 REV
D	25307	
SCALE		INDEX SHEET 1 OF 1

FILE NAME: A1---1001-055_1_RHV.DWG 9-21-11

60176753.0001

DWG: \\N21JFS2\Pro\REDS\60176753 (K10018)_REDS - High Voltage\500 CAD\REDS_HV-WP1\N246A-Substation\E\Sheet\A1---1001-E055_1_RHV.dwg Version: 17.1s (LMS Tech) User: polden
DATE: Sep 22, 2011 - 10:23:18 am

DWG NO. A1---1001-E56 | SH. 1 | REV

SHEET NOTES

1. FOR GENERAL NOTES, SYMBOLS AND ABBREVIATIONS, SEE DRAWING G4.
2. HATCHED LINES INDICATE EXISTING MATERIALS AND EQUIPMENT TO BE DEMOLISHED AND REMOVED.
3. SEE DRAWING E54 FOR EQUIPMENT LAYOUT–EXISTING/DEMOLITION.

KEY NOTES

1 NOT USED.

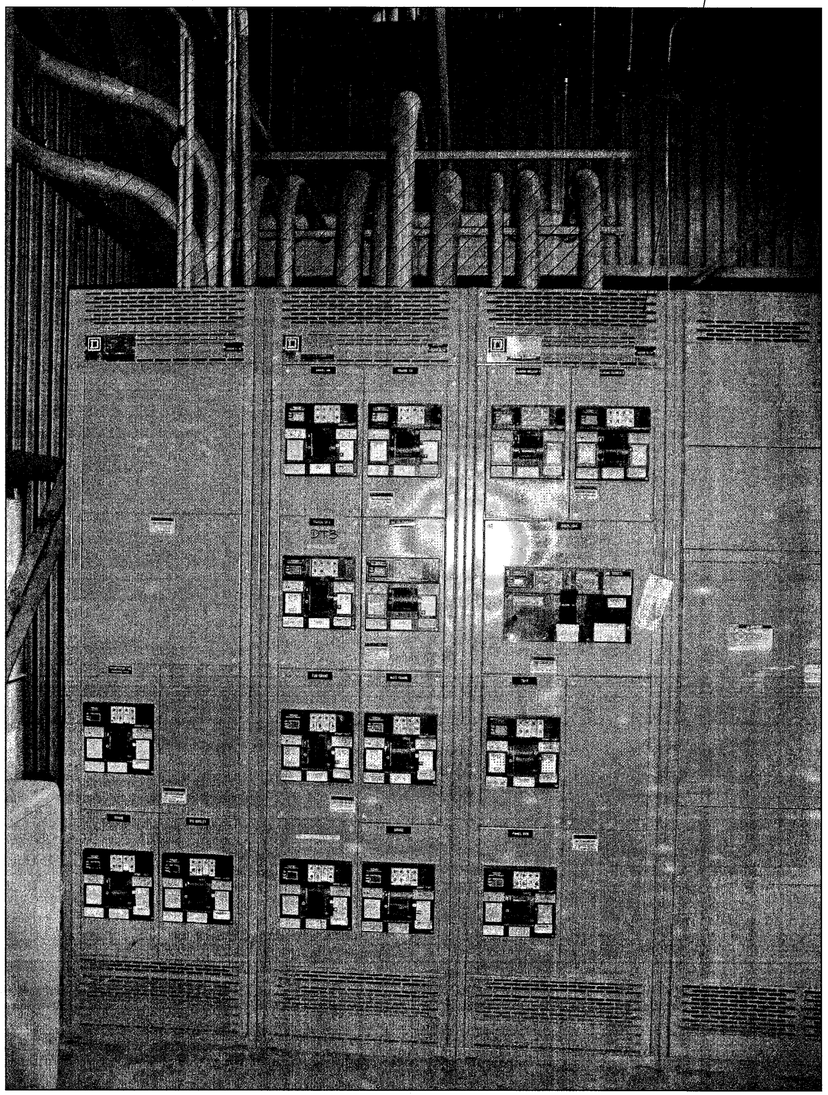

1 LOW VOLTAGE MAIN DISTRIBUTION PANEL
E54 | E56 SCALE: NTS

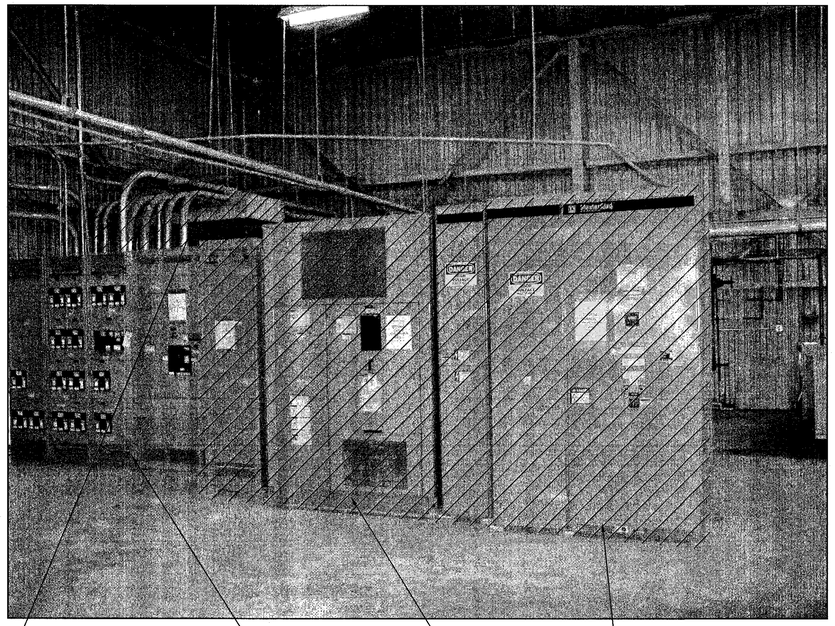

2 (E) SUBSTATION
E54 | E56 SCALE: NTS

Approved for Construction
Moffett Field Permit Board
Chief Building Official
Permit No. 11P038

ZONE	LETTER	DESCRIPTION	DRAWN	DATE	APPRVD

REVISIONS

DRAWN N.NIZAMOVA	DATE 9/21/11	Ames Research Center, Moffett Field, California
DESIGNED N.NIZAMOVA	DATE 9/21/11	RESTORATION OF ELECTRICAL DISTRIBUTION SYSTEM–HIGH VOLTAGE WP1
CHECKED J.McCUSKER	DATE 9-21-11	N246 INDOOR SUBSTATION
PROJMGR F.JONES	DATE 9-23-11	ELECTRICAL
REQUESTER D.TRAN	DATE 9/26/11	PHOTOGRAPHIC DETAILS DEMOLITION
R&QA	DATE	
SAFETY	DATE	
SUPERVISOR S.FRANKEL	DATE OCT 21 2011	SIZE D · CAGE CODE 25307 · REV A · 1---1001-E56
	DATE	SCALE · INDEX · SHEET 1 OF 1

REGISTERED PROFESSIONAL ENGINEER JAMES T. McCUSKER No. E013699 ELECTRICAL STATE OF CALIFORNIA

FILE NAME: A1---1001-E056_1_RHV.DWG 9-21-11

60176753.0001

DWG: \\NZ13FS2\Proj\REDS\60176753 (K10016)_REDS - High Voltage\500 CAD\REDS_HV-WP1\N246A-Substation\E\Sheet\A1---1001-E056_1_RHV.dwg Version: 17.1s (LMS Tech) User: polden
DATE: Sep 21, 2011 - 1:58:44 pm

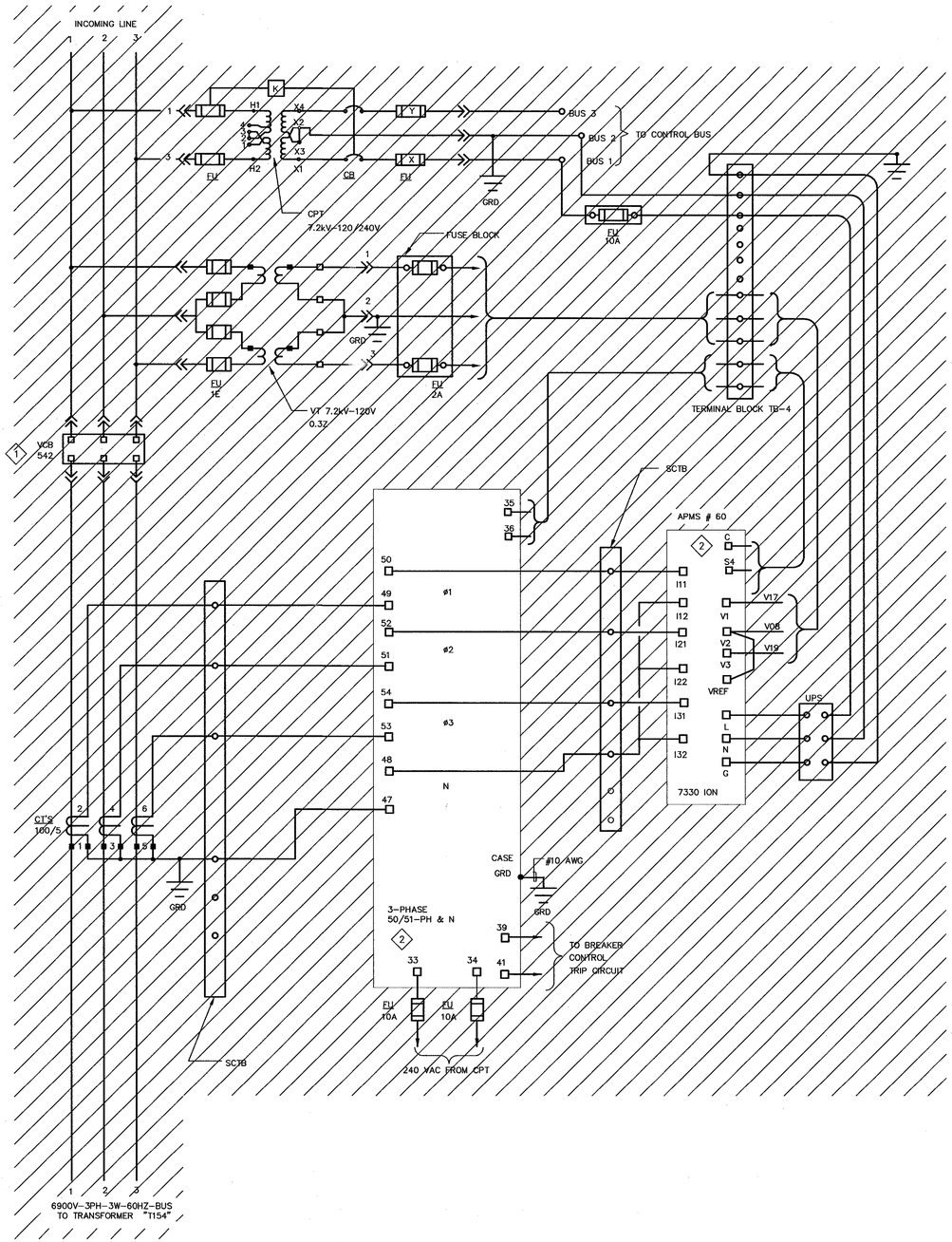

1 THREE LINE DIAGRAM – DEMOLITION
SCALE: NTS

SHEET NOTES

1. FOR GENERAL NOTES, SYMBOLS AND ABBREVIATIONS, SEE DRAWING G4.
2. HATCHED LINES INDICATE EXISTING MATERIAL/EQUIPMENT TO BE DEMOLISHED AND REMOVED. U.O.N.
3. THE DIAGRAM IS PROVIDED FOR GUIDANCE ONLY. THE CONTRACTOR SHALL FIELD VERIFY ALL EXISTING EQUIPMENT INCLUDING TERMINAL BLOCKS, TERMINAL IDENTIFICATION NUMBER, CONNECTIONS ETC. AND REVISE DRAWINGS AS NEEDED TO MATCH EXISTING AND NEW EQUIPMENT TO PROVIDE A COMPLETE FUNCTIONAL SYSTEM.
4. THE CONTROL DIAGRAM IS BASED ON THE LATEST KMOWN EXISTING DRAWINGS.

KEY NOTES

1. DISCONNECT AND REMOVE EXISTING ACB SWITCHGEAR AND ALL ASSOCIATED DEVICES AND ACCESSORIES.
2. REMOVE, PROTECT FROM DAMAGE AND TURN OVER TO THE GOVERNMENT.

Approved for Construction
Moffett Field Permit Board
Chief Building Official
Permit No. 11P038

ZONE	LETTER	DESCRIPTION	DRAWN	DATE	APPRVD

REVISIONS

DRAWN N.NIZAMOVA	DATE 9/21/11	Ames Research Center, Moffett Field, California
DESIGNED N.NIZAMOVA	DATE 9/21/11	
CHECKED J.McCUSKER	DATE 9-21-11	RESTORATION OF ELECTRICAL DISTRIBUTION SYSTEM-HIGH VOLTAGE WP1
PROJMGR F.JONES	DATE 9.23.11	N246 INDOOR SUBSTATION
REQUESTER D.TRAN	DATE 9/22/11	ELECTRICAL
R&QA	DATE	THREE LINE DIAGRAM DEMOLITION
SAFETY	DATE	
SUPERVISOR S.FRANKEL	DATE OCT 21 2011	SIZE D · CAGE CODE 25307 · REV A · A1---1001-E57
	DATE	SCALE · INDEX · SHEET 1 OF 1

REGISTERED PROFESSIONAL ENGINEER JAMES T. McCUSKER No. EE13699 ELECTRICAL STATE OF CALIFORNIA

FILE NAME: A1---1001-E057_1_RHV.DWG 9-21-11

60176753.0001

DWG: \\N21JFS21\Proj\RESS\60176753 (K10018)_RESS - High Voltage\500 CAD\RESS_HV-WP1\N246H-Substation\E\Sheet\A1---1001-E057_1_RHV.dwg Version: 17.1s (LMS Tech) User: potden
DATE: Sep 20, 2011 - 5:26:52 pm

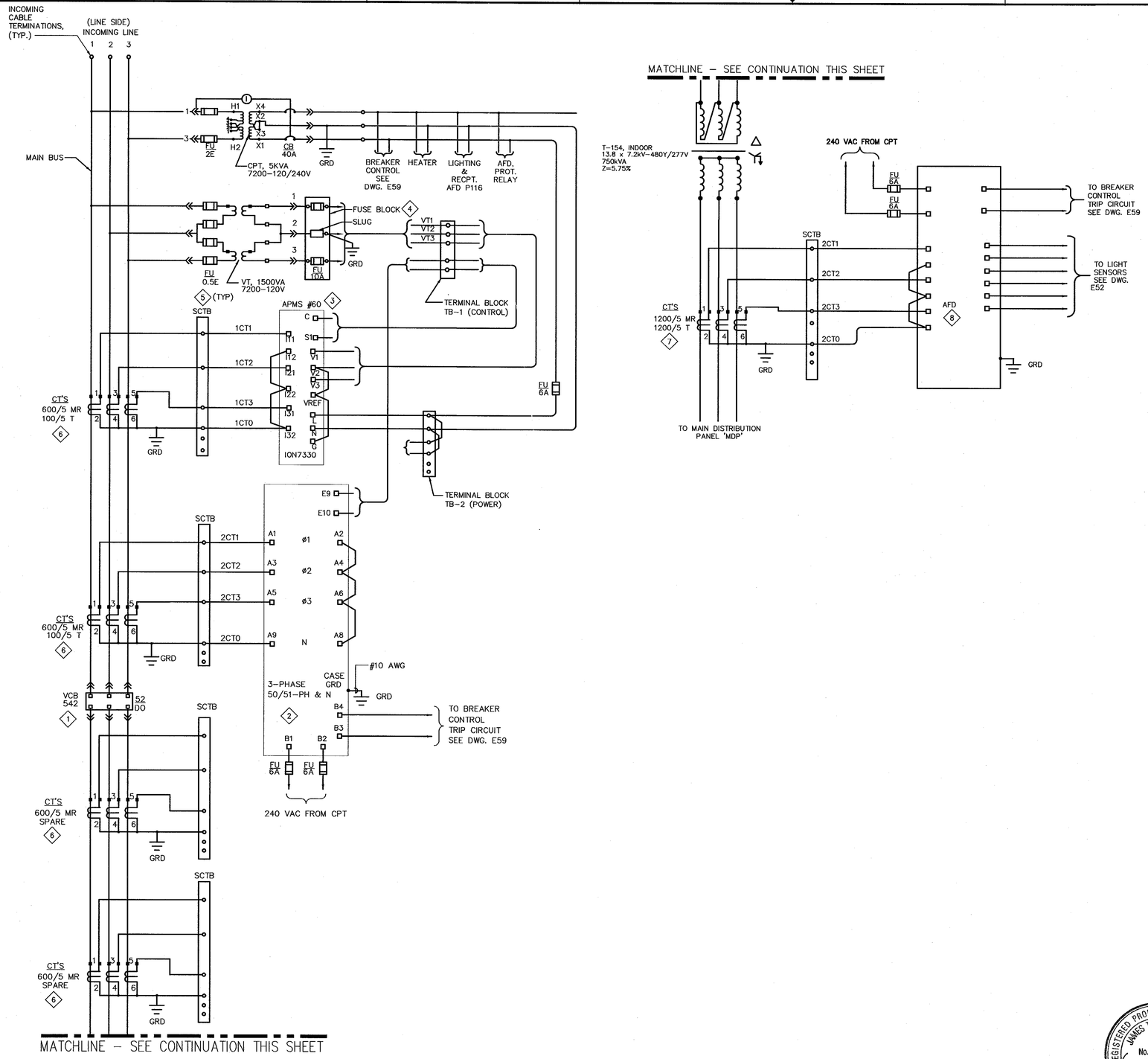

1 THREE LINE DIAGRAM–NEW WORK
SCALE: NTS

SHEET NOTES

1. FOR GENERAL NOTES, SYMBOLS AND ABBREVIATIONS, SEE DRAWING G4.
2. DARK OR HEAVY LINES INDICATE NEW MATERIAL/EQUIPMENT TO BE PROVIDED. U.O.N.
3. THE DIAGRAM IS PROVIDED FOR GUIDANCE ONLY. THE CONTRACTOR SHALL FIELD VERIFY ALL EXISTING EQUIPMENT INCLUDING TERMINAL BLOCKS, TERMINAL IDENTIFICATION NUMBER, CONNECTIONS ETC. AND REVISE DRAWINGS AS NEEDED TO MATCH EXISTING AND NEW EQUIPMENT TO PROVIDE A COMPLETE FUNCTIONAL SYSTEM.
4. ALL CT WIRES SHALL BE #10 AWG MINIMUM, TYPE SIS. ALL VOLTAGE, CPT SECONDARY AND BREAKER TRIP WIRES SHALL BE #12 AWG MINIMUM, TYPE SIS. U.O.N.

KEY NOTES

1. PROVIDE NEW 15KV, 1200A SWITCHGEAR WITH 15KV VACUUM CIRCUIT BREAKER AND ACCESSORIES PER SPECIFICATION.
2. INSTALL GFE ALSTOM RELAY COMPLETELY WIRED INTO THE NEW EQUIPMENT.
3. INSTALL GFE DIGITAL POWER METER COMPLETELY WIRED INTO THE NEW EQUIPMENT.
4. PROVIDE FUSE BLOCK, FLEXCORE KLK-3 OR APPROVED EQUAL.
5. PROVIDE (4) CIRCUIT SHORTING TERMINAL BLOCK (SCTB), FLEXCORE 1KU6SC OR APPROVED EQUAL.
6. PROVIDE (2) SETS OF 3 WINDOW-TYPE MULTI-RATIO CT'S ON THE LINE SIDE OF THE BREAKER. PROVIDE (2) ADDITIONAL SPARE SETS OF CT'S ON THE LOAD SIDE OF THE BREAKER. ALL CT'S SHALL BE C200 ACCURACY.
7. PROVIDE (1) SET OF 3 WINDOW-TYPE MULTI-RATIO CT'S ON THE LOAD SIDE OF THE TRANSFORMER. CT'S SHALL BE C400 ACCURACY.
8. INSTALL ARC FLASH DETECTOR COMPLETELY WIRED INTO THE NEW SWITCHGEAR. INSTALLATION SHALL BE IN ACCORDANCE WITH MANUFACTURER'S RECOMENDATIONS.

Approved for Construction
Moffett Field Permit Board

Chief Building Official
Permit No. 11P038

ZONE	LETTER	DESCRIPTION	DRAWN	DATE	APPRVD
REVISIONS					

DRAWN N.NIZAMOVA	DATE 9/21/11	
DESIGNED N.NIZAMOVA	DATE 9/21/11	
CHECKED J.McCUSKER	DATE 9-21-11	
PROJMGR F.JONES	DATE 9.23.11	
REQUESTER D.TRAN	DATE 9/26/11	
R&QA	DATE	
SAFETY	DATE	
SUPERVISOR S.FRANKEL	DATE OCT 21 2011	
	DATE	

REGISTERED PROFESSIONAL ENGINEER JAMES T. McCUSKER No. E013699 ELECTRICAL STATE OF CALIFORNIA

Ames Research Center
Moffett Field, California

RESTORATION OF ELECTRICAL DISTRIBUTION SYSTEM–HIGH VOLTAGE WP1
N246 INDOOR SUBSTATION
ELECTRICAL

THREE LINE DIAGRAM NEW WORK

SIZE	CAGE CODE	DWG NO.	REV
D	25307	A1---1001-E58	
SCALE		INDEX SHEET 1 OF 1	

FILE NAME: A1---1001-E058_1_RHV.DWG 9-21-11

60176753.0001

DWG: \\N21.3752\Proj\RESDS\60176753 (410018)_RESDS - High Voltage\300 CAD\RESDS_HV-WP1\N246A-Substation\E\Sheet\A1---1001-E058_1_RHV.dwg Version: 17.1s (LMS Tech) User: polden
DATE: Sep 20, 2011 - 5:26:58 pm

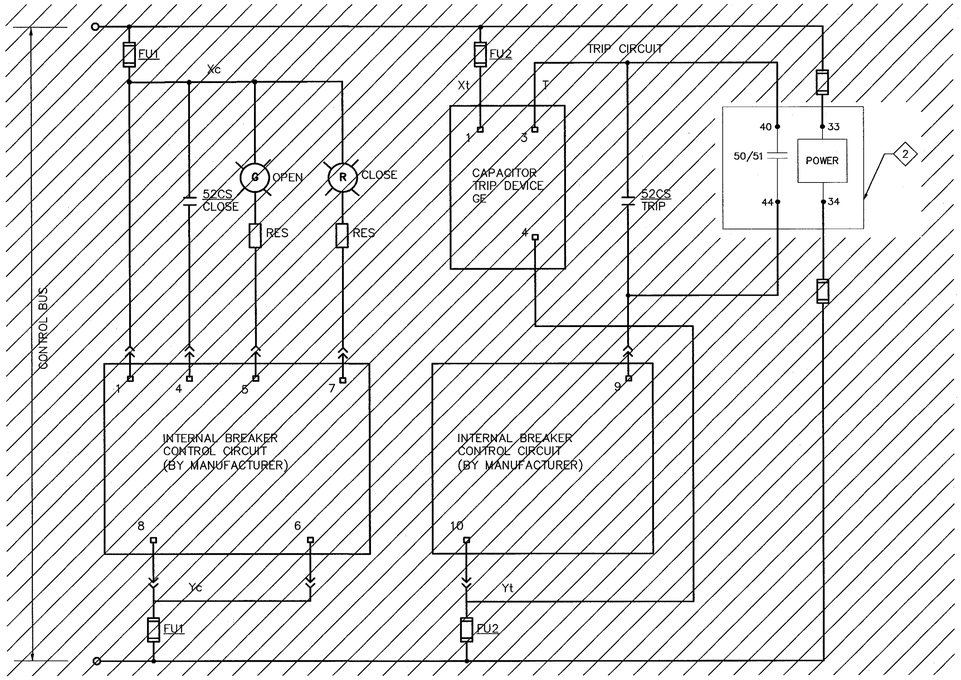

1 VCB542 BREAKER CONTROL DIAGRAM – DEMOLITION 1
SCALE: NTS

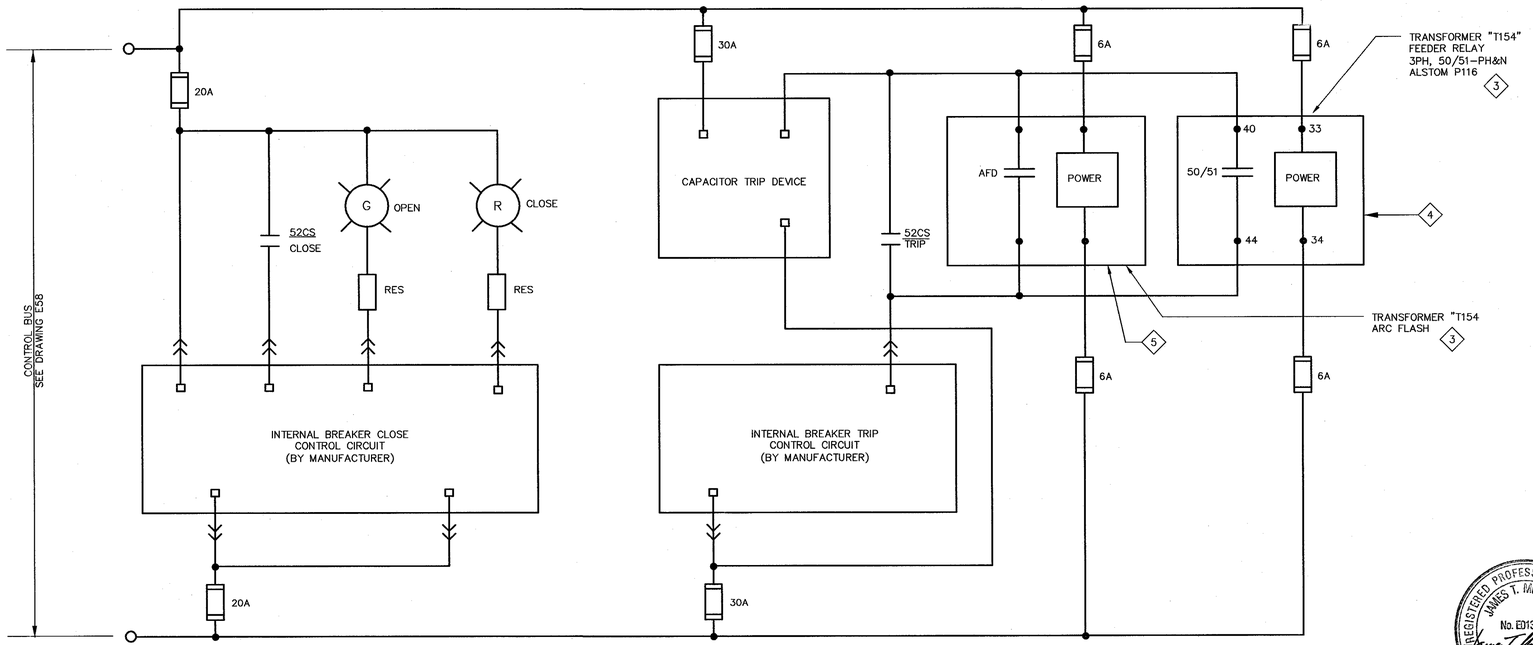

2 VCB542 BREAKER CONTROL DIAGRAM – NEW WORK
SCALE: NTS

DWG NO. A1---1001-E59 SH. 1 REV

SHEET NOTES

1. FOR GENERAL NOTES, SYMBOLS AND ABBREVIATIONS, SEE DRAWING G4.
2. HATCHED LINES INDICATE EXISTING MATERIAL/EQUIPMENT TO BE DEMOLISHED AND REMOVED. U.O.N.
3. DARK OR HEAVY LINES INDICATE NEW MATERIAL/EQUIPMENT TO BE PROVIDED. U.O.N.
4. THE DIAGRAMS ARE PROVIDED FOR GUIDANCE ONLY. THE CONTRACTOR SHALL FIELD VERIFY ALL EXISTING EQUIPMENT INCLUDING TERMINAL BLOCKS, TERMINAL IDENTIFICATION NUMBER, CONNECTIONS ETC. AND REVISE DRAWINGS AS NEEDED TO MATCH EXISTING AND NEW EQUIPMENT TO PROVIDE A COMPLETE FUNCTIONAL SYSTEM.
5. THE CONTROL DIAGRAMS ARE BASED ON THE LATEST KMOWN EXISTING DRAWINGS.
6. NEW TERMINAL MARKINGS ARE BASED ON CUTLER HAMMER INFORMATION.

KEY NOTES

1. DISCONNECT AND REMOVE EXISTING VCB542 SWITCHGEAR INCLUDING ALL ASSOCIATED DEVICES AND ACESSORIES.
2. REMOVE ALSTOM RELAY FROM (E) SWITCHGEAR AND TURN OVER TO THE GOVERNMENT.
3. TYPICAL BREAKER CONTROL DIAGRAM WITH THE RELATED TRANSFORMER FEEDER RELAY. FOR SUBSTATION ONE LINE DIAGRAM AND THREE LINE DIAGRAM, REFER TO THE DRAWINGS E52 AND E58 RESPECTIVELY.
4. INSTALL NEW GFE 3-PHASE MICROPROCESSOR BASED RELAY, ALSTOM MICOM P124, COMPLETELY WIRED INTO THE EQUIPMENT.
5. IINSTALL NEW ARC FLASH DETECTOR COMPLETELY WIRED INTO THE EQUIPMENT.

Approved for Construction
Moffett Field Permit Board
Chief Building Official
Permit No. 11P038

ZONE	LETTER	DESCRIPTION	DRAWN	DATE	APPRVD

REVISIONS

DRAWN N.NIZAMOVA		DATE 9/21/11
DESIGNED N.NIZAMOVA		DATE 9/21/11
CHECKED J.McCUSKER		DATE 9-21-11
PROJMGR F.JONES		DATE 9.23.11
REQUESTER D.TRAN		DATE 9/26/11
R&QA		DATE
SAFETY		DATE
SUPERVISOR S.FRANKEL		DATE OCT 21 2011

REGISTERED PROFESSIONAL ENGINEER JAMES T. McCUSKER No. E013699 ELECTRICAL STATE OF CALIFORNIA

Ames Research Center
Moffett Field, California

RESTORATION OF ELECTRICAL DISTRIBUTION SYSTEM–HIGH VOLTAGE WP1
N246 INDOOR SUBSTATION
ELECTRICAL

VCB542
BREAKER CONTROL DIAGRAMS
DEMOLITION & NEW WORK

SIZE D | CAGE CODE 25307 | A 1---1001-E59 | REV
SCALE | INDEX | SHEET 1 OF 1
FILE NAME: A1---1001-E059_1_RHV.DWG 9-21-11

60176753.0001

DWG: \\N213FS2\Proj\REDS\60176753 (K10018)_REDS - High Voltage\500 CAD\REDS_HV-WP1\N246A-Substation\E\Sheet\A1---1001-E059_1_RHV.dwg Version: 17.1s (LMS Tech) User: palden
DATE: Sep 20, 2011 - 5:29:01 pm

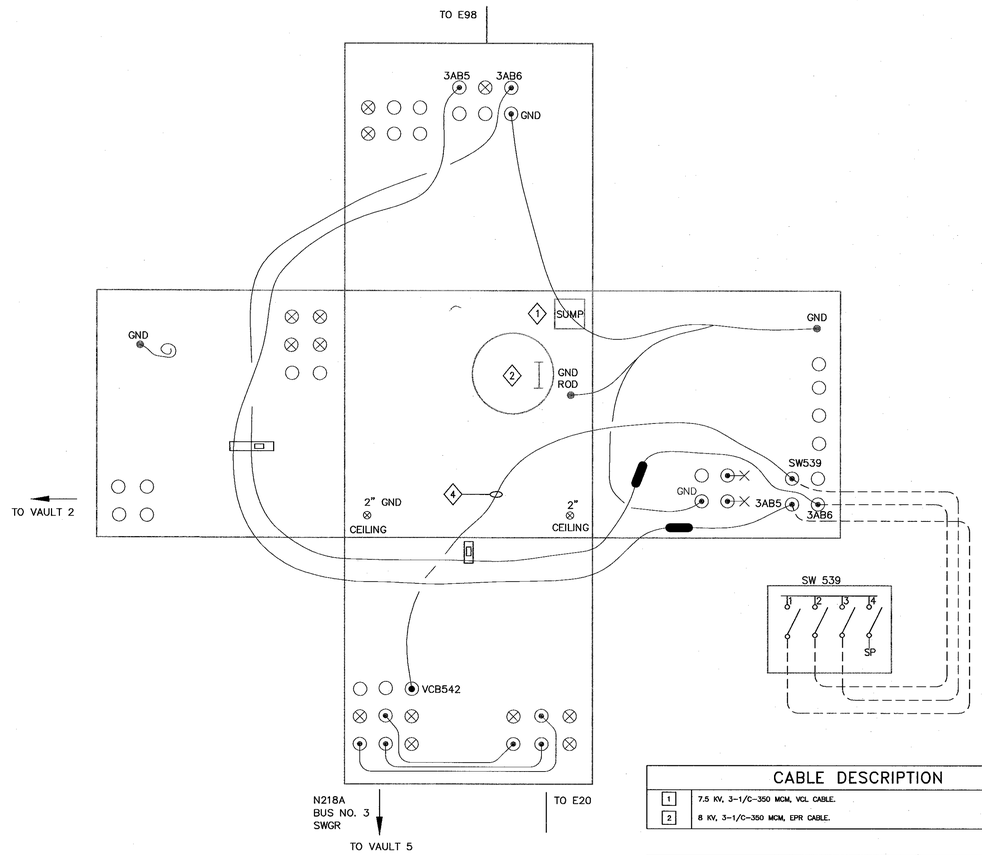

CABLE DESCRIPTION	
1	7.5 KV, 3-1/C-350 MCM, VCL CABLE.
2	8 KV, 3-1/C-350 MCM, EPR CABLE.

FEEDER I.D. TAG	
1	FEEDER 3 A/B 5, 500 MCM, 2003 OKONITE, 6.9 KV.
2	FEEDER 3 A/B 6, 500 MCM, 2003 OKONITE, 6.9 KV.

1 MANHOLE E69 DETAIL
SCALE: NTS (N.E COR. OF N216B)

N

SHEET NOTES

1. FOR GENERAL NOTES, SYMBOLS AND ABBREVIATIONS, SEE DRAWING G4.
2. SHEET NOTES #1,2,3 ARE NOT PART OF THIS CONTRACT (THE INTENTION IS FOR NASA 'IN-HOUSE' USE)
3. THIS DRAWING IS NOT THE CONTROLLED NASA AMES CONFIGURATION MANAGEMENT BASELINE DRAWING.
4. THE AMES CONFIGURATION MANAGEMENT BASELINE DRAWING THAT WAS USED TO CREATE THE PROJECT DRAWING IS A1---9801-E69.
5. NOT ALL CONDUITS AND CONDUCTORS ARE SHOWN ON DRAWING.
6. HATCHED LINES INDICATE EXISTING MATERIAL/EQUIPMENT TO BE DEMOLISHED AND REMOVED, U.O.N.
7. CONTRACTOR SHALL FIELD VERIFY ALL MEASUREMENTS AT THE SITE AND SHALL BE RESPONSIBLE FOR THEIR ACCURACY PRIOR TO STARTING ANY WORK OR ORDERING ANY MATERIAL.
8. UPON COMPLETION OF CABLE WORK AND PRIOR ENERGIZATIOIN, CONTRACTOR SHALL INFORM GOVERNMENT FOR TAKING AS-BUILT PHOTOS AND UPDATING OF NASA REFERENCE DWG.
9. FOR N246A INDOOR SUBSTATION SITE PLAN - EXISTING/DEMO AND NEW WORK SEE DRAWING E53.
10. LIGHT LINES INDICATE EXISTING CONDITION AND DARK LINES INDICATE NEW WORK.
11. NEW CABLE ROUTING INSIDE THE MANHOLE IS SHOWN DIAGRAMMATICALLY. EXACT CABLE ROUTING INSIDE MANHOLE SHALL BE IN ACCORDANCE WITH DWG E69.

KEY NOTES

1. (E) SUMP SIZE: 9"X9"X6" DP.
2. (E) MANHOLE OPENING SIZE: 36" DIA. x 32" DP.
3. (E) CABLE SIZE AND TYPE.
4. (E) 15KV, 3-1/C-350 KCMIL CABLE

NASA REFERENCE DRAWINGS

A1---9801-E69 UNDERGROUND POWER DISTRIBUTION MANHOLE E69 DETAIL.

A1---8703-E6-----AMES RESEARCH CENTER UNDERGROUND ELECTRICAL DUCTS AREA #5.

A1---0202-E4-----ELECTRICAL SITE PLAN UNDERGROUND POWER DUCTS AREA NO. 4.

REGISTERED PROFESSIONAL ENGINEER
JAMES T. McCUSKER
No. E013699
ELECTRICAL
STATE OF CALIFORNIA

Approved for Construction
Moffett Field Permit Board
Chief Building Official
Permit No. 11P038

ZONE	LETTER	DESCRIPTION	DRAWN	DATE	APPRVD

REVISIONS

DRAWN	N.NIZAMOVA	DATE 9/21/11
DESIGNED	N.NIZAMOVA	DATE 9/21/11
CHECKED	J.McCUSKER	DATE 9-21-11
PROJMGR	F.JONES	DATE 9.23.11
REQUESTER	D.TRAN	DATE 9.22.11
R&QA		DATE
SAFETY		DATE
SUPERVISOR	S.FRANKEL	DATE OCT 21 2011
		DATE

NASA
Ames Research Center
Moffett Field, California

RESTORATION OF ELECTRICAL DISTRIBUTION SYSTEM-HIGH VOLTAGE WP1
N246 INDOOR SUBSTATION
ELECTRICAL

MANHOLE NO. E69 DETAILS

SIZE	CAGE CODE	REV
D	25307	A
SCALE	NONE	INDEX SHEET 1 OF 1

FILE NAME: A1---1001-E060_1_RHV.DWG 9-21-11

60176753.0001

DWG: \\N213FS2\Proj\KEDS\60176753 (K10018)_KEDS - High Voltage\300 CAD\KEDS_HV-WP1\N246A-Substation\E\Sheet\A1---1001-E060_1_RHV.dwg Version: 17.1s (LMS Tech) User: palden
DATE: Sep 20, 2011 - 5:28:08 pm

DWG NO.	SH.	REV
A1---1001-E61	1	

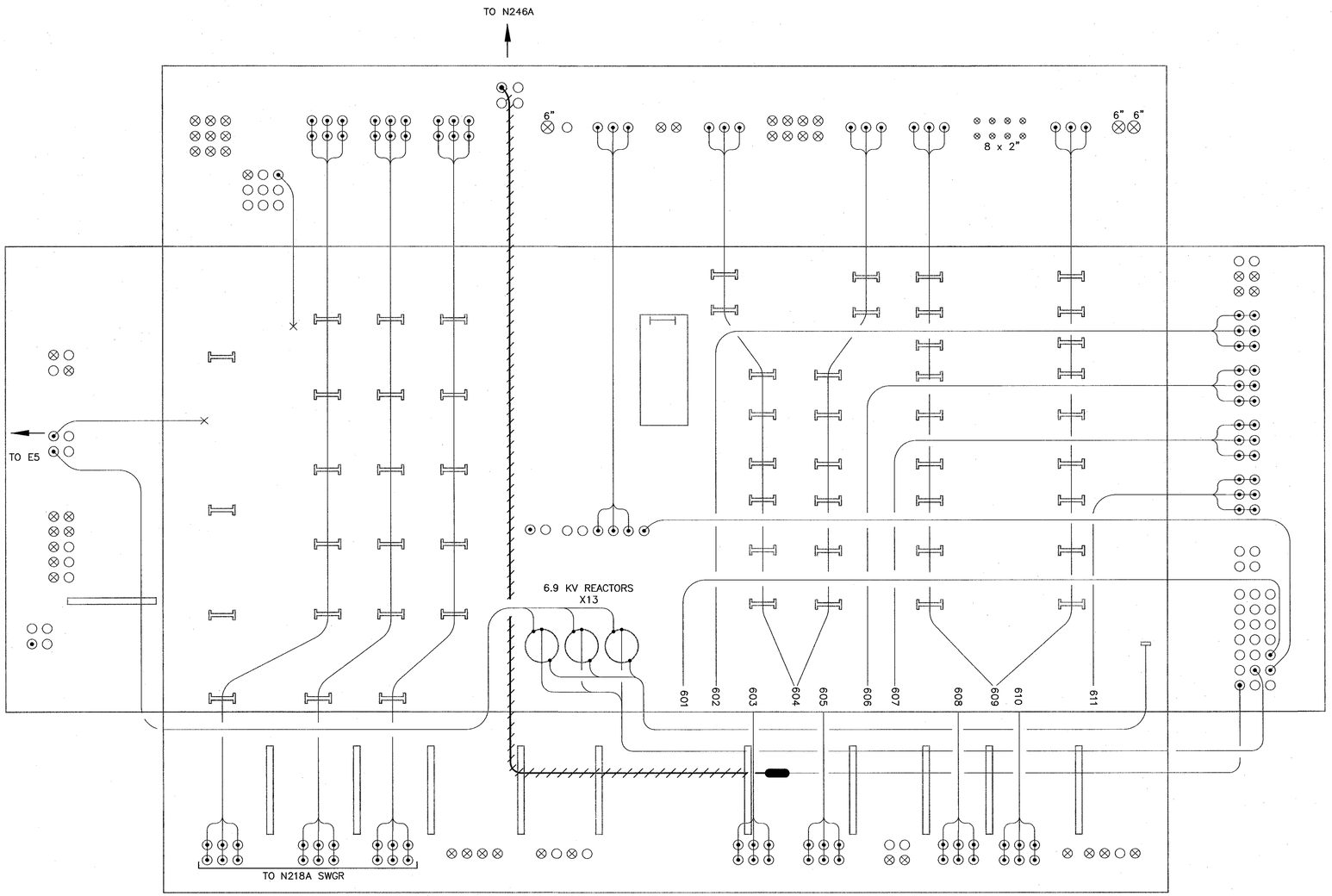

SHEET NOTES

1. FOR GENERAL NOTES, SYMBOLS AND ABBREVIATIONS, SEE DRAWING G4.
2. SHEET NOTES #1,2,3 ARE NOT PART OF THIS CONTRACT (THE INTENTION IS FOR NASA 'IN-HOUSE' USE)
3. THIS DRAWING IS NOT THE CONTROLLED NASA AMES CONFIGURATION MANAGEMENT BASELINE DRAWING.
4. THE AMES CONFIGURATION MANAGEMENT BASELINE DRAWING THAT WAS USED TO CREATE THE PROJECT DRAWING IS A1---9801-E69.
5. NOT ALL CONDUITS AND CONDUCTORS ARE SHOWN ON DRAWING.
6. HATCHED LINES INDICATE EXISTING MATERIAL/EQUIPMENT TO BE DEMOLISHED AND REMOVED, U.O.N.
7. CONTRACTOR SHALL FIELD VERIFY ALL MEASUREMENTS AT THE SITE AND SHALL BE RESPONSIBLE FOR THEIR ACCURACY PRIOR TO STARTING ANY WORK OR ORDERING ANY MATERIAL.
8. UPON COMPLETION OF CABLE WORK AND PRIOR ENERGIZATIOIN, CONTRACTOR SHALL INFORM GOVERNMENT FOR TAKING AS-BUILT PHOTOS AND UPDATING OF NASA REFERENCE DWG.
9. FOR N246A INDOOR SUBSTATION SITE PLAN – EXISTING/DEMO AND NEW WORK SEE DRAWING E53.
10. LIGHT LINES INDICATE EXISTING CONDITION AND DARK LINES INDICATE NEW WORK.

KEY NOTES

1 NOT USED.

1 VAULT 5 – DEMOLITION
SCALE: NTS (AT BASEMENT OF BLDG N218A)

Approved for Construction
Moffett Field Permit Board

Chief Building Official
Permit No. 11P038

ZONE	LETTER	DESCRIPTION	DRAWN	DATE	APPRVD
		REVISIONS			

DRAWN N.NIZAMOVA	DATE 9/21/11	Ames Research Center, Moffett Field, California
DESIGNED N.NIZAMOVA	DATE 9/21/11	RESTORATION OF ELECTRICAL DISTRIBUTION SYSTEM-HIGH VOLTAGE WP1
CHECKED J.McCUSKER	DATE 9-27-11	N246 INDOOR SUBSTATION
PROJMGR F.JONES	DATE 9.23.11	ELECTRICAL
REQUESTER D.TRAN	DATE 9/22/11	VAULT 5 DETAIL DEMOLITION
R&QA	DATE	
SAFETY	DATE	
SUPERVISOR S.FRANKEL	DATE OCT 21 2011	SIZE D / CAGE CODE 25307 / A 1---1001-E61 REV
	DATE	SCALE / INDEX / SHEET 1 OF 1

REGISTERED PROFESSIONAL ENGINEER JAMES T. McCUSKER No. E013699 ELECTRICAL STATE OF CALIFORNIA

FILE NAME: A1---1001-E061_1_RHV.DWG 9-21-11

60176753.0001

DWG: \\N21JFS2\Proj\REDS\60176753 (K10018)_REDS - High Voltage\500 CAD\REDS_HV-WP1\N246A-Substation\E\Sheet\A1---1001-E061_1_RHV.dwg Version: 17.1s (LMS Tech) User: pdden
DATE: Sep 20, 2011 - 5:29:10 pm

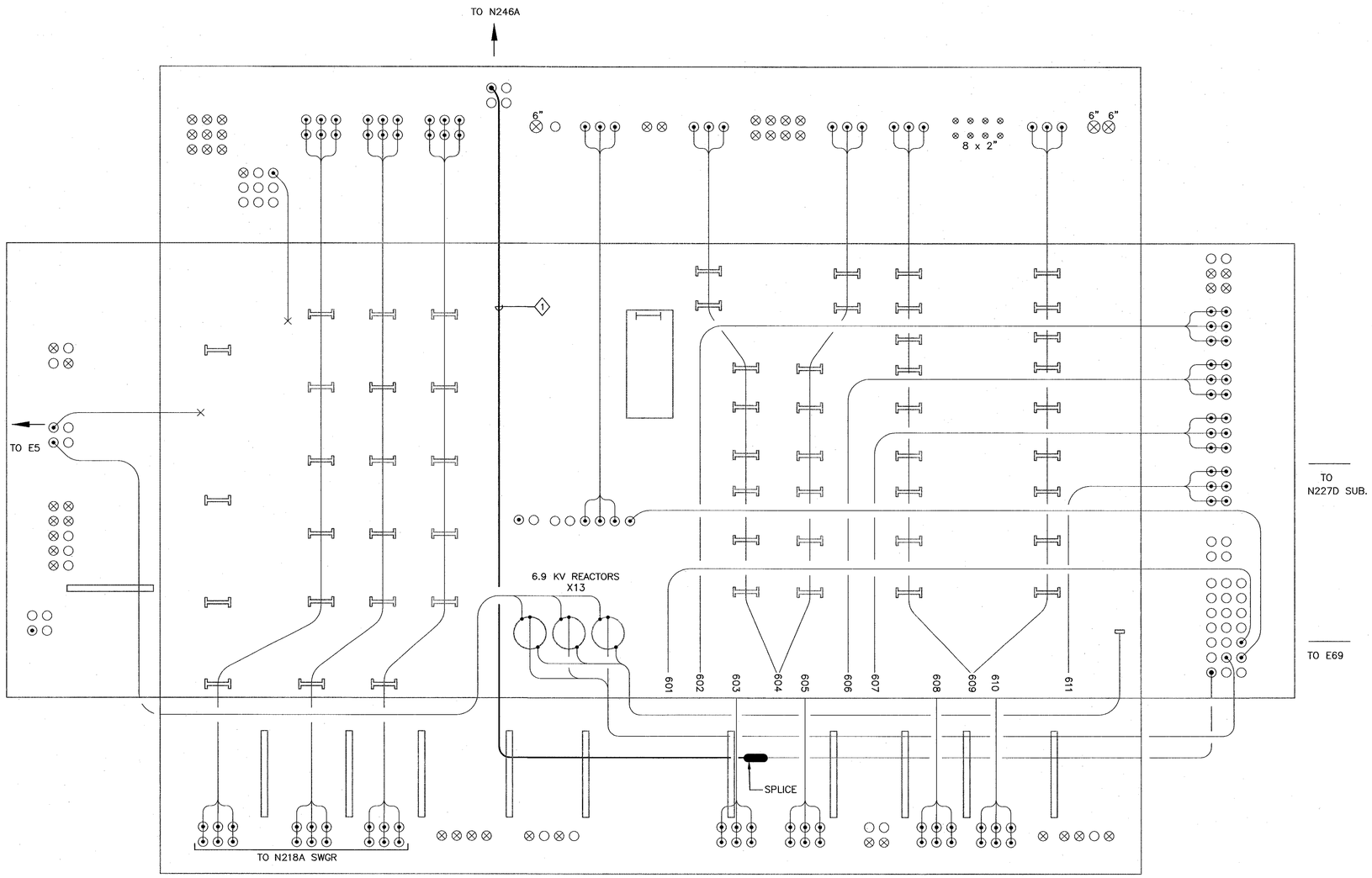

1 VAULT 5 – NEW WORK
SCALE: NTS (AT BASEMENT OF BLDG N218A)

SHEET NOTES

1. FOR GENERAL NOTES, SYMBOLS AND ABBREVIATIONS, SEE DRAWING G4.
2. SHEET NOTES #1,2,3 ARE NOT PART OF THIS CONTRACT (THE INTENTION IS FOR NASA 'IN-HOUSE' USE)
3. THIS DRAWING IS NOT THE CONTROLLED NASA AMES CONFIGURATION MANAGEMENT BASELINE DRAWING.
4. THE AMES CONFIGURATION MANAGEMENT BASELINE DRAWING THAT WAS USED TO CREATE THE PROJECT DRAWING IS A1---9801-E405.
5. NOT ALL CONDUITS AND CONDUCTORS ARE SHOWN ON DRAWING..
6. CONTRACTOR SHALL FIELD VERIFY ALL MEASUREMENTS AT THE SITE AND SHALL BE RESPONSIBLE FOR THEIR ACCURACY PRIOR TO STARTING ANY WORK OR ORDERING ANY MATERIAL.
7. UPON COMPLETION OF CABLE WORK AND PRIOR ENERGIZATIOIN, CONTRACTOR SHALL INFORM GOVERNMENT FOR TAKING AS-BUILT PHOTOS AND UPDATING OF NASA REFERENCE DWG.
8. FOR N246A INDOOR SUBSTATION SITE PLAN – EXISTING/DEMO AND NEW WORK SEE DRAWING E53.
9. LIGHT LINES INDICATE EXISTING CONDITION AND DARK LINES INDICATE NEW WORK.
10. NEW CABLE ROUTING INSIDE THE VAULT IS SHOWN DIAGRAMMATICALLY.

KEY NOTES

1 PROVIDE NEW 15 KV, 3-1/C #350 KCMIL 133% INSULATION, EPR CABLE AND 1/C #4/0 GND FROM VAULT 5 TO NEW 1200A SWITCHGEAR ON BLDG. N246A.

Approved for Construction
Moffett Field Permit Board

Chief Building Official
Permit No. 11P038

ZONE	LETTER	DESCRIPTION	DRAWN	DATE	APPRVD

REVISIONS

DRAWN N.NIZAMOVA		DATE 9/21/11
DESIGNED N.NIZAMOVA		DATE 9/21/11
CHECKED J.McCUSKER		DATE 9-21-11
PROJMGR F.JONES		DATE 9.23.11
REQUESTER D.TRAN		DATE 9/26/11
R&QA		DATE
SAFETY		DATE
SUPERVISOR S.FRANKEL		DATE OCT 21 2011
		DATE

REGISTERED PROFESSIONAL ENGINEER JAMES T. McCUSKER No. E013699 ELECTRICAL STATE OF CALIFORNIA

Ames Research Center
Moffett Field, California

RESTORATION OF ELECTRICAL DISTRIBUTION SYSTEM-HIGH VOLTAGE WP1
N246 INDOOR SUBSTATION
ELECTRICAL
VAULT 5
DETAIL
NEW WORK

SIZE	CAGE CODE	REV
D	25307	A 1---1001-E62
SCALE	INDEX	SHEET 1 OF 1

FILE NAME: A1---1001-E062_1_RHV.DWG 9-21-11

60176753.0001

DWG: \\N213FS2\Proj\REDS\60176753 (K10018)_REDS - High Voltage\500 CAD\REDS_HV-WP1\N246A-Substation\E\Sheet\A1---1001-E062_1_RHV.dwg Version: 17.1s (LMS Tech) User: polden
DATE: Sep 20, 2011 - 5:29:15 pm

DWG NO.	SH.	REV
A1---1001-S8	1	

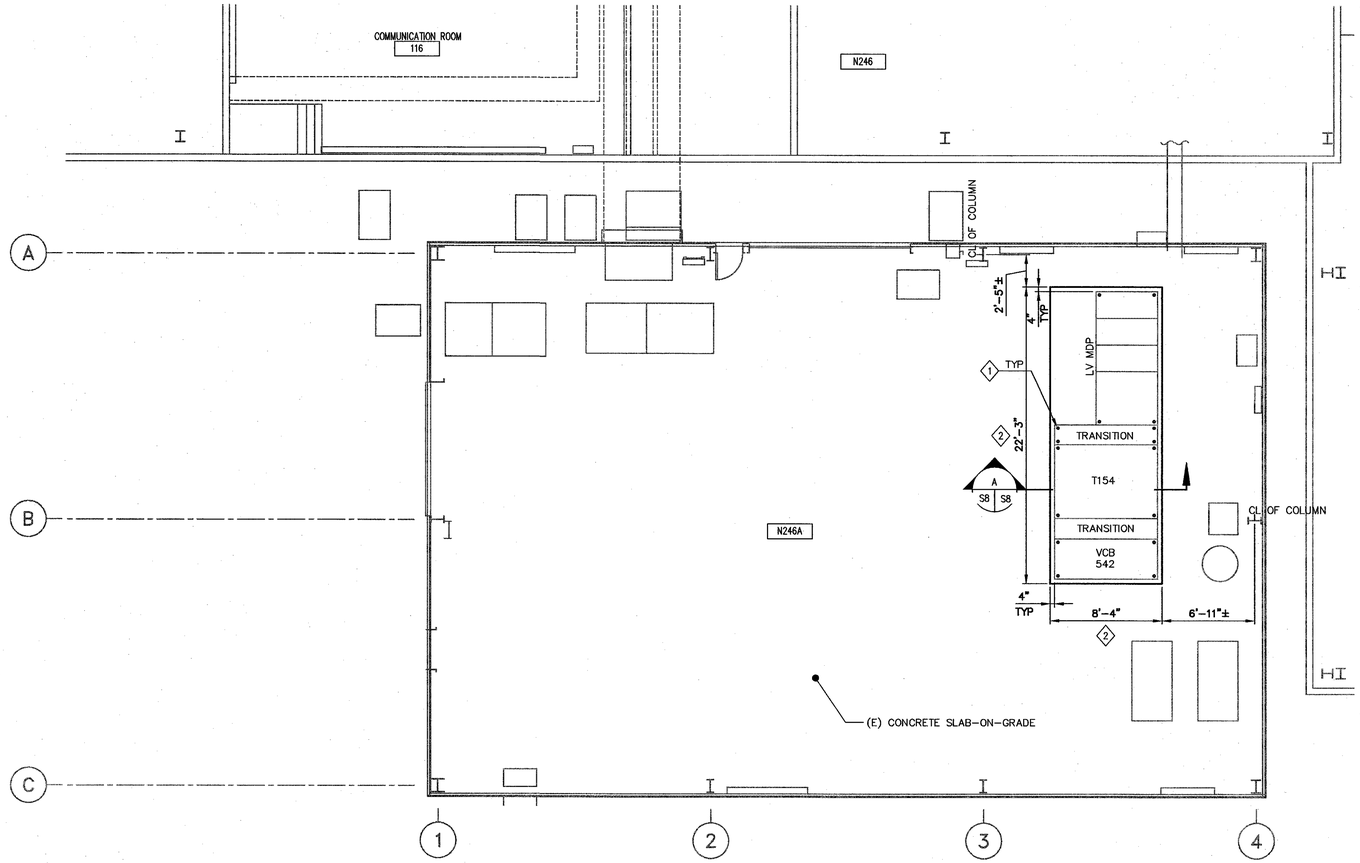

1 FOUNDATION PLAN
S8 S8 SCALE: 3/16"=1'-0"

N

3/16"=1' 0 2 4 8 12 16

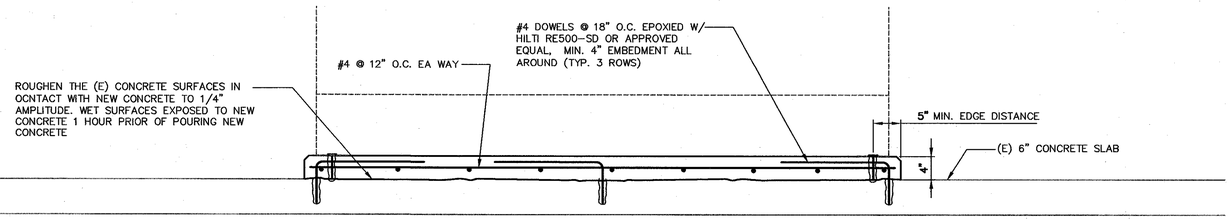

A SECTION
S8 S8 SCALE: 1"=1'-0"

1"=1' 0 6" 1 2 3

SHEET NOTES

1. FOR GENERAL STRUCTURAL NOTES, SYMBOLS AND ABREVIATIONS SEE DRAWING S1.

KEY NOTES

1. 1/2"ø THREADED ROD W/ HILTI RE-500 SD ADHESIVE ANCHOR, MIN. 6" EMBEDMENT (TOTAL OF 4 PER EQUIPMENT).
2. THE SIZE AND LOCATION OF (N) EQUIPMENT PAD IS TO BE DEPENDENT UPON THE SIZE AND LOCATION OF THE (N) ELECTRICAL EQUIPMENT. COORDINATE THE EXACT SIZE AND LOCATION OF THE (N) PAD WITH THE ELECTRICAL CONTRACTOR, SEE DWG E55.

KEY PLAN

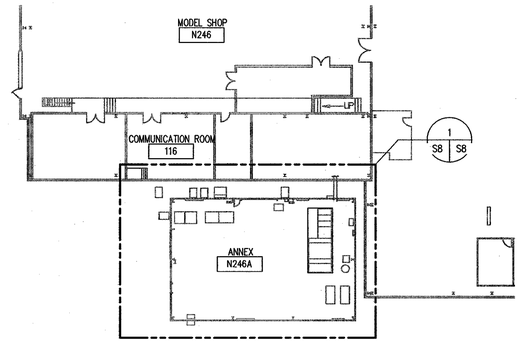

Approved for Construction
Moffett Field Permit Board

Chief Building Official
Permit No. 11P038

ZONE	LETTER	DESCRIPTION	DRAWN	DATE	APPRVD

REVISIONS

DRAWN F.BONALDI	DATE 9.22.11	
DESIGNED A.PIROOZI	DATE 9.22.11	
CHECKED N.SHAH A. Firouzi for Nutan Shah	DATE 9.22.11	
PROJMGR F.JONES	DATE 9.23.11	
REQUESTER D.TRAN	DATE 9/26/11	
R&QA	DATE	
SAFETY	DATE	
SUPERVISOR S.FRANKEL	DATE OCT 21 2011	

Ames Research Center
Moffett Field, California

RESTORATION OF ELECTRICAL DISTRIBUTION SYSTEM-HIGH VOLTAGE WP1
N246 INDOOR SUBSTATION
STRUCTURAL

FOUNDATION PLAN

SIZE	CAGE CODE	REV
D	25307	A 1---1001-S8
SCALE	INDEX	SHEET 1 OF 1

FILE NAME: A1---1001-S008_1_RHV.DWG 9-21-11

60176753.0001

DWG: R:\REDS\60176753 (K10018)_REDS - High Voltage\500 CAD\REDS_HV-WP1\N246A-Substation\S\Sheet\A1---1001-S008_1_RHV.dwg Version: 17.1s (LMS Tech) User: wbonaldi
DATE: Sep 22, 2011 - 1:33:18 pm

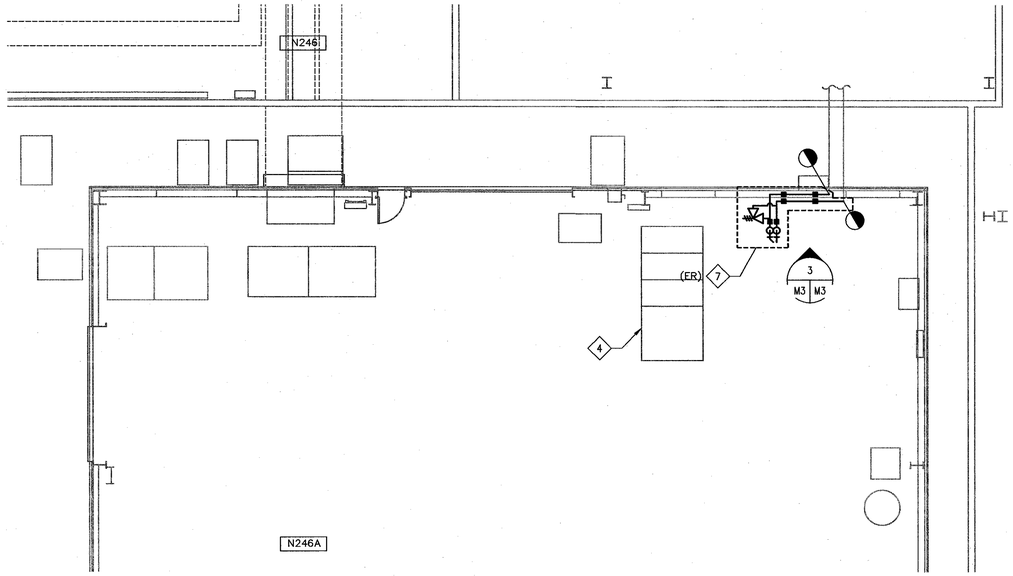

1 MECHANICAL PLAN – DEMOLITION
M3 M3 SCALE: 3/16"=1'-0"

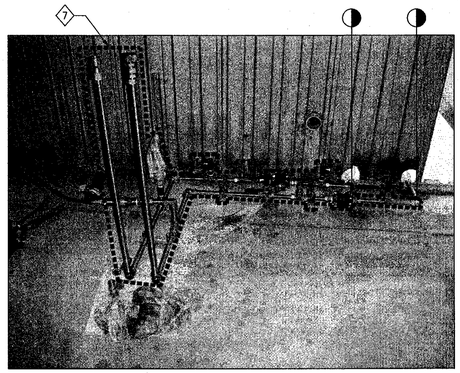

3 EXISTING HYDRAULIC PIPE TUBING
M3 M3 SCALE: NONE

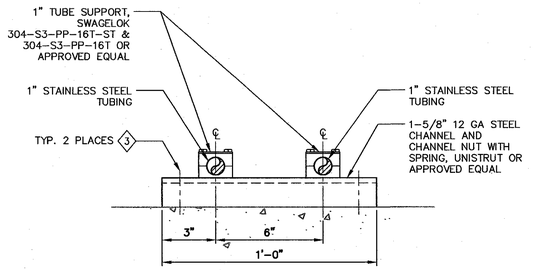

4 PIPE SUPPORT IN BUILDING N246A
M3 M3 SCALE: 3/16"=1'-0"

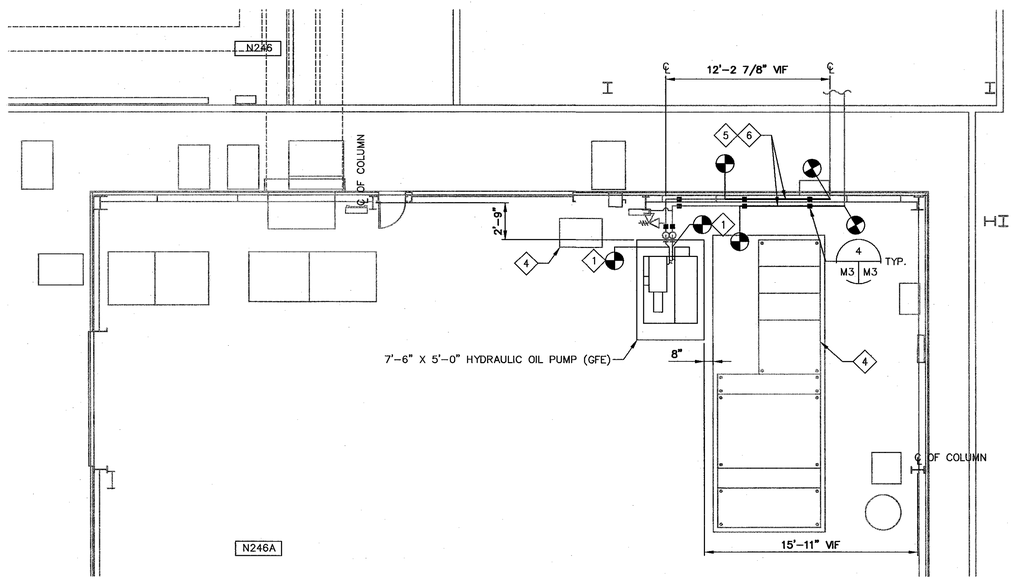

2 MECHANICAL PLAN – NEW WORK
M3 M3 SCALE: 3/16"=1'-0"

3/16"=1' 0 2 4 8 12 16

SHEET NOTES

1. PIPE SUPPORT SPAN SPACING SHALL BE LESS THAN OR EQUAL TO 6.5 FEET FOR 1" TUBING, FOLLOW MANUFACTURER'S INSTALLATION RECOMMENDATION.
2. NEW PIPING AND PIPING COMPONENTS SHALL BE HYDROSTATICALLY TESTED AND LEAK TESTED PER DRAWING M1.

KEY NOTES

1. PROVIDE AND INSTALL TUBE ADAPTERS/FITTINGS TO CONNECT HYDRAULIC SUPPLY AND RETURN TUBING TO EXISTING 1"-37° JIC AN MALE CONNECTION ON HYDRAULIC UNIT SUPPLY AND RETURN LINES, 3000 PSI RATED AT -40°F TO 185°F.
2. NOT USED.
3. 3/8" 316 STAINLESS STEEL EXPANSION-TYPE ANCHOR, 2" MIN. EMBEDMENT, HILTI KWIK BOLT TZ OR APPROVED EQUAL TO COMPLY WITH 2007 CALIFORNIA BUILDING CODE.
4. ELECTRICAL EQUIPMENT, SEE ELECTRICAL DRAWINGS FOR DETAIL.
5. 1" HYDRAULIC SUPPLY & RETURN STAINLESS STEEL TUBING, 0.095" THICK WALL, ASTM A269 TP 304 STAINLESS STEEL.
6. PROVIDE ADDITIONAL 1" STAINLESS STEEL TUBING (SUPPLY AND RETURN) AND PIPE SUPPORTS AS REQUIRED TO CONNECT EXISTING AND SALVAGED TUBING AT POINT OF CONNECTION.
7. DISCONNECT EXISTING VALVES, PRESSURE GAUGES, PIPE SUPPORTS, SAFETY RELIEF VALVES AND TUBING AT POINT OF DISCONNECTION. MOVE AND INSTALL SALVAGE PIPE TUBING COMPONENTS AT NEW LOCATION SHOWN ON SITE PLAN 2 M3 M3.

KEY PLAN

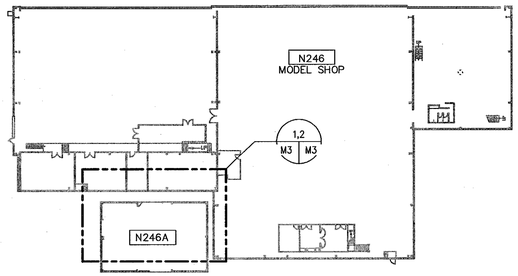

Approved for Construction
Moffett Field Permit Board

Chief Building Official
Permit No. 11P038

ZONE	LETTER	DESCRIPTION	DRAWN	DATE	APPRVD

REVISIONS

REGISTERED PROFESSIONAL ENGINEER PETER C. WAN No. 24619 Exp. MECHANICAL STATE OF CALIFORNIA

DRAWN J.HO	DATE 9/22/2011	
DESIGNED J.HO	DATE 9/22/2011	
CHECKED P.WAN	DATE 9/22/11	
PROJMGR F.JONES	DATE 9.23.11	
REQUESTER D.TRAN	DATE 9/26/11	
R&QA	DATE	
SAFETY	DATE	
SUPERVISOR S.FRANKEL	DATE OCT 21 2011	

Ames Research Center
Moffett Field, California

RESTORATION OF ELECTRICAL DISTRIBUTION SYSTEM-HIGH VOLTAGE WP1
N246 INDOOR SUBSTATION
MECHANICAL

MECHANICAL PLAN DEMOLITION AND NEW WORK

SIZE	CAGE CODE	REV
D	25307	A 1---1001-M3
SCALE	INDEX	SHEET 1 OF 1

FILE NAME: A1---1001-M003.DWG 9-21-11

60176753.0001

DWG: \\N213FS2\Proj\REDS\60176753 (K10018)_REDS - High Voltage\500 CAD\REDS_HV-WP1\N246A-Substation\M\Sheet\A1---1001-M003.dwg Version: 17.1s (LMS Tech) User: palden
DATE: Sep 22, 2011 - 1:44:42 pm

DWG NO.	SH.	REV
A1---1001-E63	1	–

SHEET NOTES

1. FOR GENERAL NOTES, SYMBOLS AND ABBREVIATIONS, SEE DRAWING G4.
2. MATERIAL 1/16 INCH THICK FORMICA WITH BEVELED EDGES.
3. FASTEN TO PANEL WITH 4-40x3/8" LONG STAINLESS SCREWS. DRILL PANEL WITH #39 DRILL & TAP.
4. ENGRAVED LINE TO BE 1/2" SHORTER THEN NP LENGTH. ALLOW 9 3/16" OR 6 1/4" CHARACTERS PER INCH
5. COLOR CODE NAMEPLATE:
   BW=BLACK FACE WITH WHITE LETTERS
   RW=RED FACE WITH WHITE LETTERS

KEY NOTES

NAMEPLATE SCHEDULE

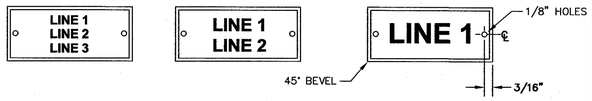

NO.	LINE 1	LINE 2	LINE 3	LINE SIZE	NP SIZE	COLOR CODE
N1	CIRCUIT BREAKER	CLOSED		3/16	1 x 3	BW
N2	CIRCUIT BREAKER	OPEN		3/16	1 x 3	BW
N3	AUTO-MANUAL	SELECTOR SWITCH	DEVICE 43	3/16	1 x 3	BW
N4	CIRCUIT BREAKER	CONTROL SW	DEVICE CS	3/16	1 x 3	BW
N5	LOCKOUT RELAY	HAND RESET	DEVICE 86	3/16	1 x 3	BW
N6	AMES POWER	MONITORING SYSTEM	APMS-148 *	3/16	1 x 3	BW
N7	PHASE & GROUND	OVERCURRENT RELAY	DEV. 50, 51, 50N, 51N, 50GS	3/16	1 x 3	BW
N8	CURRENT	TEST SWITCH	TS-1	3/16	1 x 3	BW
N9	VOLTAGE	TEST SWITCH	TS-2	3/16	1 x 3	BW
N10	SPECIAL NAMEPLATE, SEE DETAIL N10			3/8, 3/4	4 x 6	RW
N11	CIRCUIT BREAKER	VCB 692 *		1/4	1 x 3	BW
N12	INCOMING LINE	VOLTAGE	TRANSFORMER	3/16	1 x 3	BW
N13	CONTROL	POWER	TRANSFORMER	3/16	1 x 3	BW
N14	VCB692 *			1/4	1 x 3	BW
N15	SPECIAL NAMEPLATE, SEE DETAIL N15			VARY	4 x 6	RW

* TYPICAL - AS SHOWN ON DRAWINGS
ALL DIMENSIONS AND SIZES SHOWN ARE IN INCHES

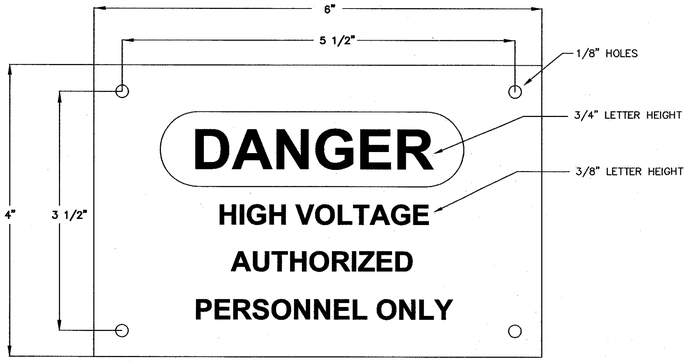

DETAIL "N10"

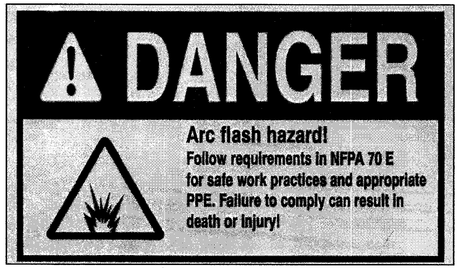

DETAIL "N15"

Approved for Construction
Moffett Field Permit Board

Chief Building Official
Permit No. 11P038

ZONE	LETTER	DESCRIPTION	DRAWN	DATE	APPRVD

REVISIONS

DRAWN N.NIZAMOVA		DATE 9/21/11
DESIGNED N.NIZAMOVA		DATE 9/21/11
CHECKED J.McCUSKER		DATE 9-21-11
PROJMGR F.JONES		DATE 9.23.11
REQUESTER D.TRAN		DATE 9/26/11
R&QA		DATE
SAFETY		DATE
SUPERVISOR S.FRANKEL		DATE OCT 21 2011
		DATE

REGISTERED PROFESSIONAL ENGINEER
JAMES T. McCUSKER
No. E013699
ELECTRICAL
STATE OF CALIFORNIA

Ames Research Center
Moffett Field, California

RESTORATION OF ELECTRICAL DISTRIBUTION SYSTEM--HIGH VOLTAGE WP1
ELECTRICAL

TYPICAL
SIGNAGE AND EQUIPMENT
NAMEPLATE SCHEDULE

SIZE	CAGE CODE		REV
D	25307	A 1---1001-E63	–
SCALE AS NOTED		INDEX	SHEET 1 OF 1

FILE NAME: A---1001-E063_1_R7B.DWG 9-21-11

60176753.0001

DWG: \\N213FS2\Proj\REDS\60176753 (K10018)_REDS - High Voltage\500 CAD\REDS_HV-WP1_Shared-WP1\E\Sheet\A1---1001-E063_1_RHV.dwg Version: 17.1s (LMS Tech) User: polden
DATE: Sep 20, 2011 - 5:29:38 pm

DWG NO. A1---1001-E64 | SH. 1 | REV –

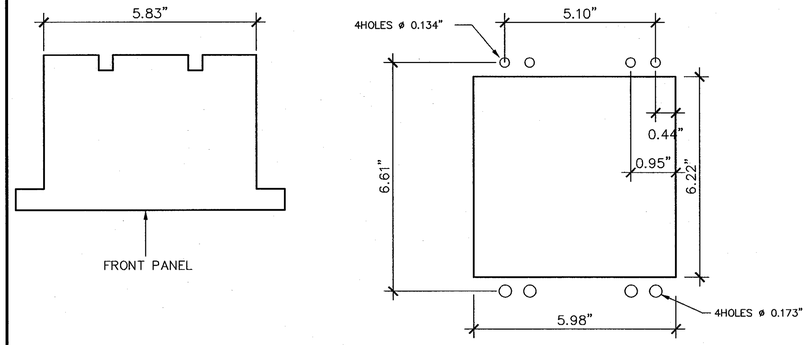

TOP VIEW

PANEL CUT–OUT

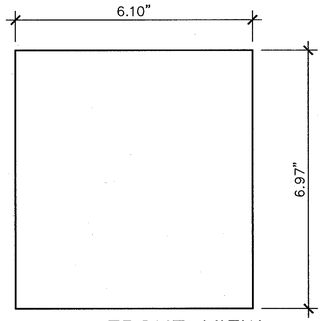

FRONT VIEW

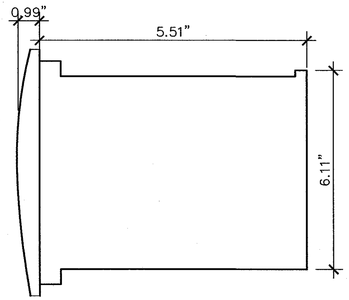

RIGHT SIDE VIEW

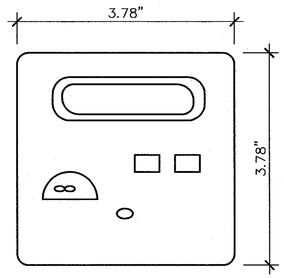

FRONT VIEW

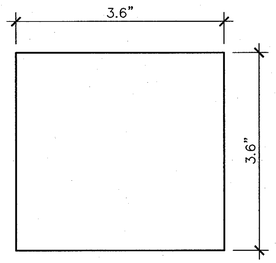

PANEL CUT–OUT

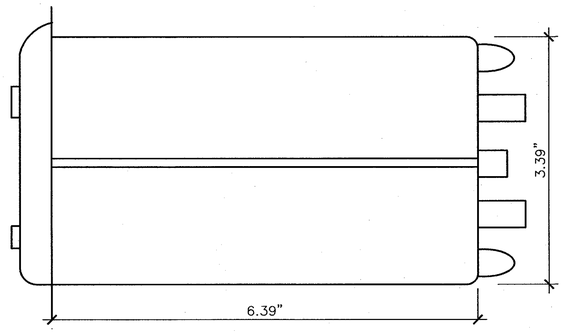

TOP VIEW

1 3–PHASE MICROPROCESSOR BASED ELECTRONIC RELAY INSTALLATION INFORMATION (FLUSH MOUNTING)
SCALE: NTS

2 DIGITAL 3–PHASE (SEE GENERAL NOTE 3) POWER METER INSTALLATION INFORMATION (FLUSH MOUNTING)
SCALE: NTS

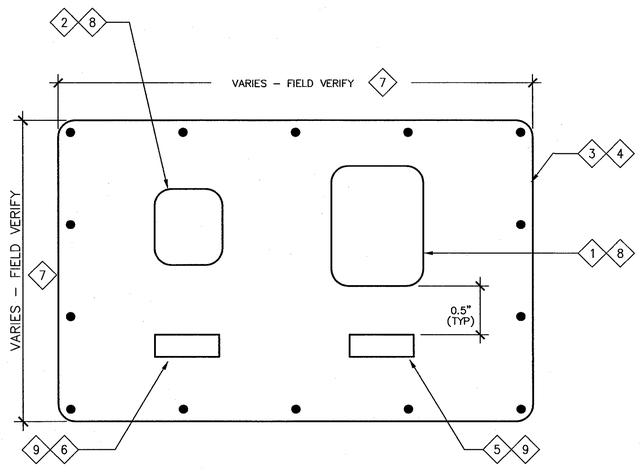

3 TYPICAL PANEL MOUNTING DETAILS (VERTICALLY MOUNTED) 10
SCALE: NTS

SHEET NOTES

1. FOR GENERAL NOTES, SYMBOLS AND ABBREVIATIONS, SEE DRAWING G4.
2. THESE DRAWING DETAILS AND DIMENSIONS ARE SHOWN FOR GUIDANCE ONLY. CONTRACTOR SHALL BE RESPONSIBLE TO CONFIRM AND PROVIDE DETAILED DRAWINGS FROM EQUIPMENT MANUFACTURER BASED ON ACTUAL EQUIPMENT SUPPLIED BEFORE INSTALLATION INTO EXISTING AND NEW EQUIPMENT.
3. INSTALL NEW GFE UPS UNIT FOR POWER METER INSIDE SWITCHGEAR.
4. FOR NAMEPLATE SCHEDULE, SEE DRAWING E63.

KEY NOTES

1. OUTLINE OF NASA AMES STANDARD 3–PHASE MICROPROCESSOR BASED 50/51 ELECTRONIC RELAY UNIT, ALSTOM MICOM P116 (GOVERNMENT FURNISHED & CONTRACTOR INSTALLED EQUIPMENT).
2. OUTLINE OF NASA AMES STANDARD DIGITAL 3–PHASE POWER METER, PML ION7330 (GOVERNMENT FURNISHED AND CONTRACTOR INSTALLED EQUIPMENT).
3. PROVIDE NEW ONE–PIECE COVER PLATE WITH MOUNTING SCREWS, OF SUITABLE SIZE TO ADEQUATELY COVER THE EXISTING CUTOUT OPENINGS OF REMOVED RELAYS FROM THEIR RESPECTIVE EXISTING SWGR INSTRUMENT PANELS.
4. NEW COVER PLATE SHALL BE #10 GAUGE STEEL PLATE. PAINTED TO MATCH THE EXISTING OR NEW EQUIPMENT PAINT FINISH.
5. PROVIDE NEW IDENTIFICATION NAMEPLATE TO READ "3ø, 50/51 – 1, 2, 3 & N".
6. PROVIDE NEW IDENTIFICATION NAMEPLATE. SEE SPECIFICATION 26 23 00 FOR NAMEPLATE DETAILS.
7. EACH PIECE OF EXISTING EQUIPMENT IS DIFFERENT. CONTRACTOR SHALL FIELD VERIFY EACH PIECE OF EQUIPMENT TO DETERMINE COVER PLATE DIMENSIONS PRIOR TO FABRICATION. COVER PLATE SHALL BE LARGE ENOUGH TO COVER EXISTING RELAY OPENINGS OF REMOVED RELAYS AND ACCOMMODATE NEW DEVICES. COVER PLATE SHALL BE AS SYMMETRICAL AS POSSIBLE ON FRONT OF EQUIPMENT AND SHALL NOT HAVE ANY SHARP EDGES.
8. FOR NEW EQUIPMENT, CONTRACTOR SHALL PROVIDE NEW OPENINGS BASED ON DETAIL 1 AND 2 FOR DEVICE MOUNTING AND DEVICE NAMEPLATES.
9. EQUIPMENT/DEVICE NAMEPLATE SHALL BE IN ACCORDANCE WITH ELECTRICAL NOTE 11 ON DRAWING E1.
10. TYPICAL MOUNTING PLATE USED WHEN EXISTING RELAYS ARE REPACED AND EXISTING CUTOUTS HAVE TO BE COVERED.

Approved for Construction
Moffett Field Permit Board
Chief Building Official
Permit No. 11P038

ZONE	LETTER	DESCRIPTION	DRAWN	DATE	APPRVD

REVISIONS

DRAWN N.NIZAMOVA	DATE 9/9/11	Ames Research Center, Moffett Field, California
DESIGNED N.NIZAMOVA	DATE 9/21/11	RESTORATION OF ELECTRICAL DISTRIBUTION SYSTEM–HIGH VOLTAGE WP1
CHECKED J.McCUSKER	DATE 9-21-11	ELECTRICAL
PROJMGR F.JONES	DATE 9.23.11	TYPICAL RELAY UNITS PANEL MOUNTING DETAILS
REQUESTER D.TRAN	DATE 9/26/11	
R&QA	DATE	
SAFETY	DATE	
SUPERVISOR S.FRANKEL	DATE OCT 21 2011	SIZE D · CAGE CODE 25307 · A 1---1001-E64 · REV –
	DATE	SCALE AS NOTED · INDEX · SHEET 1 OF 1

FILE NAME: A1-1001-E064_1_R7B.DWG 9-21-11

60176753.0001

REGISTERED PROFESSIONAL ENGINEER · JAMES T. McCUSKER · No. ED13699 · ELECTRICAL · STATE OF CALIFORNIA

DWG: \\N213FS2\Proj\REDS\60176753 (K10018)_REDS - High Voltage\500 CAD\REDS_HV-WP1_Shared-WP1\E\Sheet\A1---1001-E064_1_RHV.dwg Version: 17.1s (LMS Tech) User: palden
DATE: Sep 20, 2011 - 5:29:43 pm

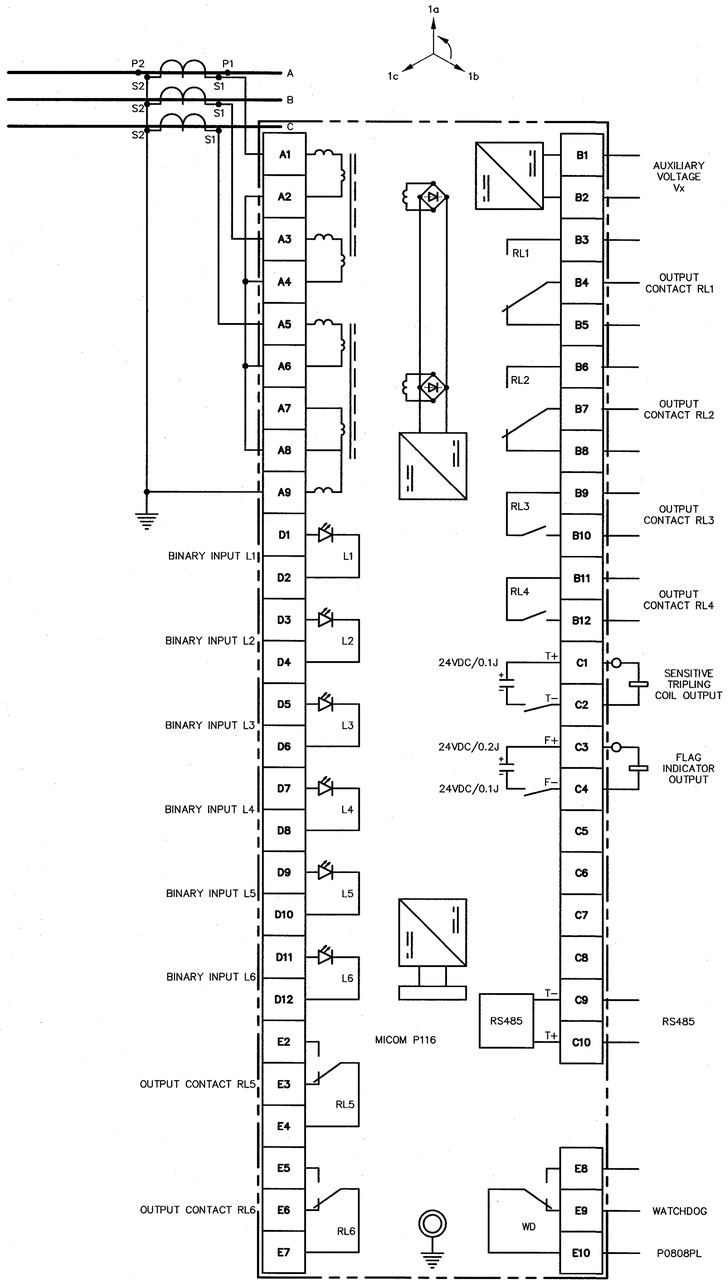

1 ALSTOM MICOM P116
50/51 RELAY WIRING DIAGRAM
SCALE: N.T.S.

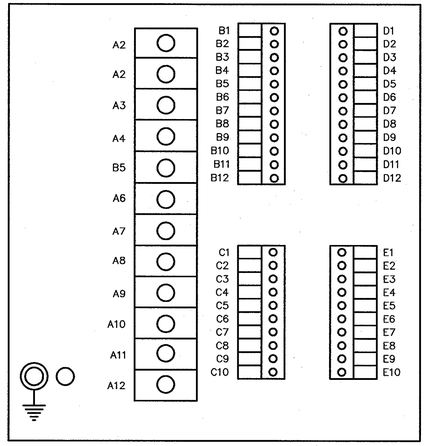

2 WIRE NUMBERING DIAGRAM
SCALE: N.T.S.

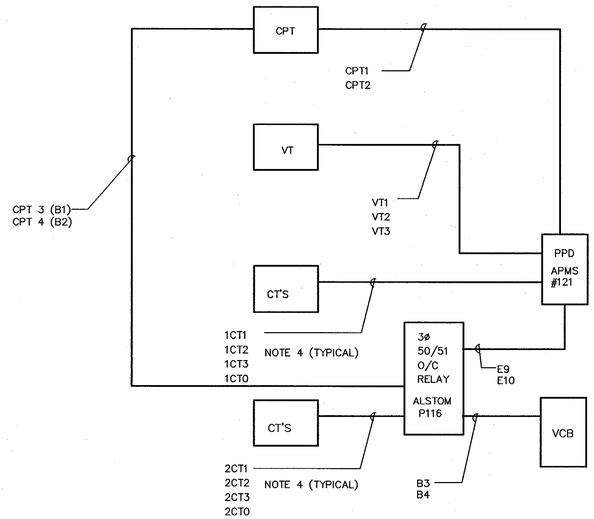

3 INTERCONNECTION BLOCK DIAGRAM
SCALE: N.T.S.

SHEET NOTES

1. FOR GENERAL NOTES, SYMBOLS AND ABBREVIATIONS, SEE DRAWING G4.
2. 50/51 RELAY SHALL BE GOVERNMENT FURNISHED & INSTALLED EQUIPMENT. THE RELAY SHALL BE THE NASA AMES STANDARD ALSTOM MODEL 116 MICROPROCESSOR BASED ELECTRONIC RELAY UNIT.
3. RELAY TO BE MOUNTED AT FRONT PANEL IN NEW BREAKER CUBICLES, AS SHOWN ON THE DRAWINGS.
4. TERMINALS A2, A4, A6 & A8 CURRENT INPUTS SHALL BE WIRED/JUMPERED EXTERNALLY BY THE CONTRACTOR.
5. WIRE NUMBERS SHALL CONSIST OF THE SUPPLY DEVICE/RELAY NUMBER AND A SEQUENTIAL NUMBER (1, 2, 3...) AS REQUIRED.

KEY NOTES

Approved for Construction
Moffett Field Permit Board

Chief Building Official
Permit No. 11P038

ZONE	LETTER	DESCRIPTION	DRAWN	DATE	APPRVD

REVISIONS

DRAWN N.NIZAMOVA	DATE 9/21/11	
DESIGNED N.NIZAMOVA	DATE 9/21/11	
CHECKED J.McCUSKER	DATE 9-21-11	
PROJMGR F.JONES	DATE 9.23.11	
REQUESTER D.TRAN	DATE 9/22/11	
R&QA –	DATE	
SAFETY	DATE	
SUPERVISOR S.FRANKEL	DATE OCT 27 2011	

REGISTERED PROFESSIONAL ENGINEER JAMES T. McCUSKER No. E013699 ELECTRICAL STATE OF CALIFORNIA

Ames Research Center
Moffett Field, California

RESTORATION OF ELECTRICAL DISTRIBUTION SYSTEM–HIGH VOLTAGE WP1
ELECTRICAL

TYPICAL 50/51 RELAY WIRING AND INTERCONNECTION DIAGRAM

SIZE	CAGE CODE	DWG NO.	REV
D	25307	A1---1001-E65	–
SCALE AS NOTED		INDEX	SHEET 1 OF 1

FILE NAME: A1---1001-E065_1_RHV.DWG 9-21-11

60176753.0001

DWG: \\N213S2\Proj\REDS\60176753 (K10018)_REDS - High Voltage\500 CAD\REDS_HV-WP1_Shared-WP1\E\Sheet\A1---1001-E065_1_RHV.dwg Version: 17.1s (LMS Tech) User: palden
DATE: Sep 20, 2011 - 5:29:48 pm

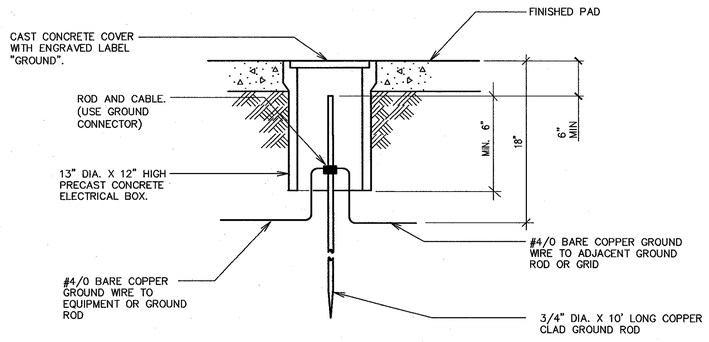

1 DETAIL–GROUND WELL
SCALE: 1"=1'–0"

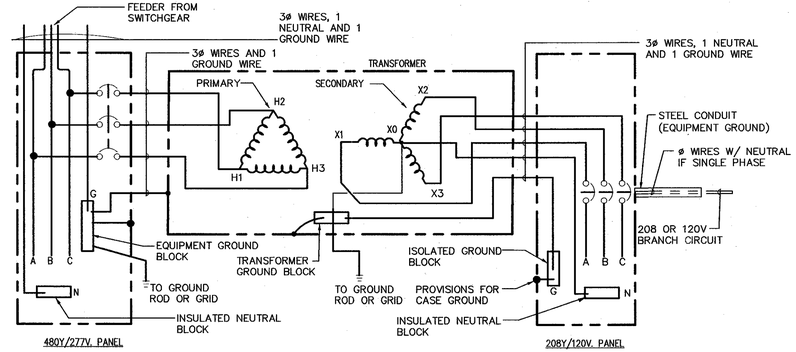

2 TRANSFORMER GROUNDING SYSTEM WIRING DIAGRAM
SCALE: 1"=1'–0"

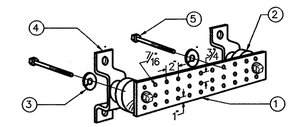

NOTES:

A. PROVIDED AND INSTALLED BY ELECTRICAL CONTRACTOR

1. COPPER GROUND BAR,1/4"X 4"X 20", NEWTON INSTRUMENT CO. CAT. NO. B–6142 (OR EQUAL). HOLE CENTERS TO MATCH NEMA DOUBLE LUG CONFIGURATION.
2. INSULATORS, NEWTON INSTRUMENT CAT. NO. 3061–4(OR EQUAL).
3. 5/8" LOCKWASHERS, NEWTON INSTRUMENT CO. CAT. NO. 3015–8(OR EQUAL).
4. WALL MOUNTING BRACKET, NEWTON INSTRUMENT CO. CAT NO. A–6056(OR EQUAL).
5. 5/8–11 X 1" H.H.C.S.BOLTS, NEWTON INSTRUMENT CO. CAT NO. 3012–1(OR EQUAL).

B. PROVIDE #4/0 BARE CU. WIRE WITH NEMA 2–HOLE CONNECTOR FROM MAIN BUILDING GROUND (MBG) BUS BAR TO MAIN COMPUTER GROUND (MCG) BUS BAR

3 GROUND BUS BAR DETAIL
SCALE: 3"=1'–0"

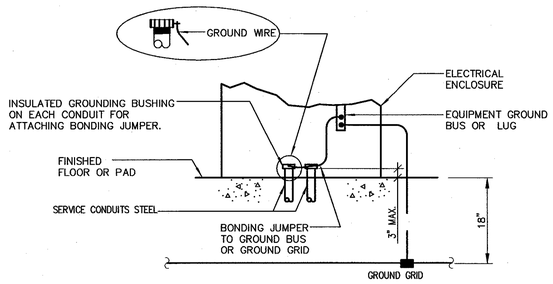

4 (TYPICAL FOR BOXES, CABINETS) CONDUIT GROUND CONNECTION DETAIL
SCALE: 1"=1'–0"

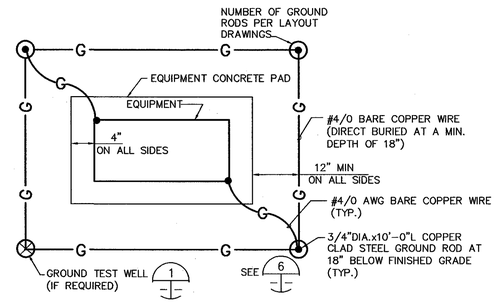

5 TYPICAL – NEW PAD MOUNTED EQUIPMENT GROUNDING DETAILS
SCALE: 6"=1'–0"

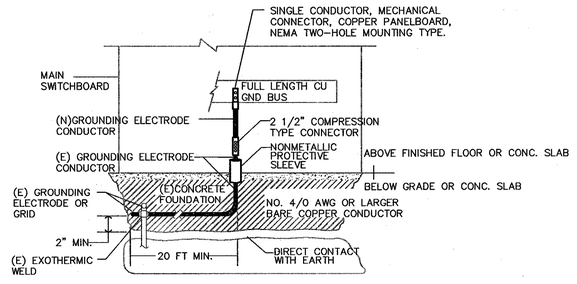

6 GROUND BUS BAR DETAIL
SCALE: 3"=1'–0"

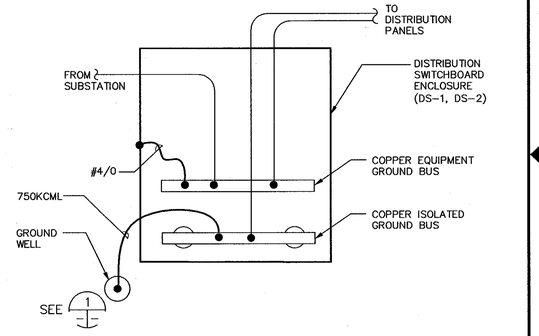

7 TYPICAL DISTRIBUTION SWITCHBOARD GROUNDING DETAIL
SCALE: NTS

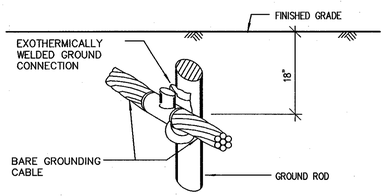

NOTES:
EXOTHERMICALLY WELDED GROUND CONNECTION SHALL BE SIZED ACCORDING TO THE MANUFACTURER'S SPECIFICATIONS FOR CABLE SIZE AND ROD USED, AS SHOWN ON PLANS.

8 DETAIL–GROUND CABLE CONNECTION TO GROUND ROD
SCALE: 1"=1'–0"

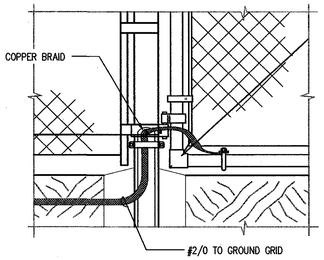

9 GATE GROUNDING DETAIL
SCALE: 1"=1–0"

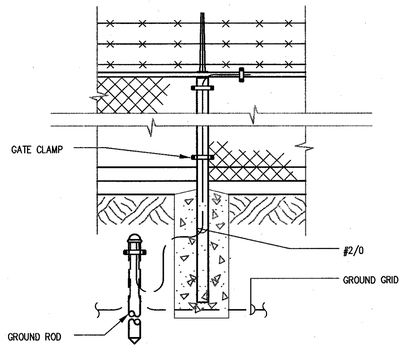

10 FENCE GROUNDING DETAIL
SCALE: 1"=1'–0"

REGISTERED PROFESSIONAL ENGINEER JAMES T. McCUSKER No. E013999 ELECTRICAL STATE OF CALIFORNIA

Approved for Construction
Moffett Field Permit Board
Chief Building Official
Permit No. 11P038

ZONE	LETTER	DESCRIPTION	DRAWN	DATE	APPRVD
		REVISIONS			

DRAWN N.NIZAMOVA	DATE 9/21/11	Ames Research Center, Moffett Field, California
DESIGNED N.NIZAMOVA	DATE 9/21/11	
CHECKED J.McCUSKER	DATE 9-21-11	RESTORATION OF ELECTRICAL DISTRIBUTION SYSTEM–HIGH VOLTAGE WP1
PROJMGR F.JONES	DATE 9.23.11	ELECTRICAL
REQUESTER D.TRAN	DATE 9/26/11	TYPICAL GROUNDING DETAILS
R&QA	DATE	
SAFETY	DATE	
SUPERVISOR S.FRANKEL	DATE OCT 27 2011	
	DATE	

SIZE D | CAGE CODE 25307 | DWG NO. A1---1001-E66 | REV –
SCALE AS NOTED | INDEX | SHEET 1 OF 1
FILE NAME: A1---1001-E066_1_RHV.DWG 9-21-11

601767S3.0001

DWG: \\V213FS2\Proj\REDS\601767S3 (K10018)_RCDS - High Voltage\500 CAD\REDS_HV-WP1_Shared-WP1\E\Sheet\A1---1001-E066_1_RHV.dwg Version: 17.1s (LMS Tech) User: polden
DATE: Sep 20, 2011 - 5:29:53 pm

DWG NO. A1---1001-E67 | SH. 1 | REV –

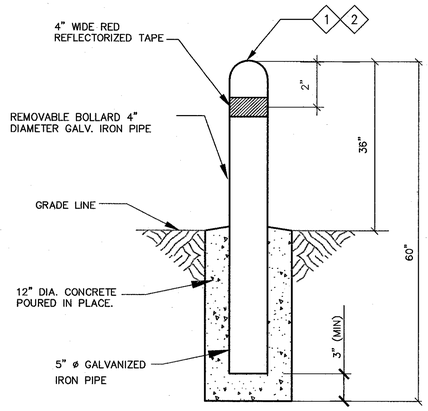

NOTE: THE 4" IRON PIPE SHALL BE PAINTED TRAFFIC YELLOW

1 TYPICAL REMOVABLE BOLLARD DETAIL
NTS

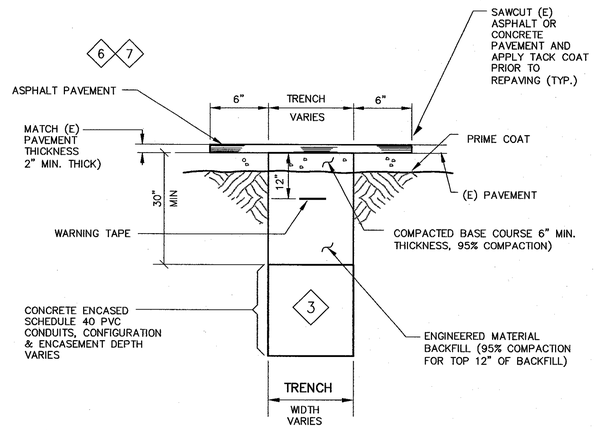

2 TYPICAL TRENCH DETAIL
NTS

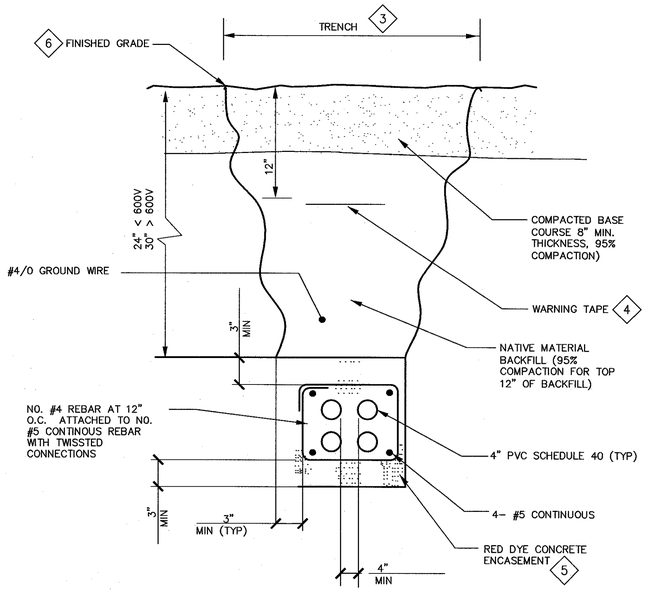

3 TYPCIAL DUCTBANK SECTION W/FOUR CONDUITS
NTS

SHEET NOTES

1. FOR GENERAL NOTES, SYMBOLS AND ABBREVIATIONS, SEE DRAWING G4.
2. FOR STRUCTURAL GENERAL NOTES SEE S1.

KEY NOTES

1. THE 4" IRON PIPE SHALL BE COATED WITH ZINCCHROMATE PRIMER BEFORE INSTALLATION AND PAINTED YELLOW.
2. SPACING BETWEEN BOLLARDS SHOWN ON THE LAYOUT DRAWINGS SHALL BE 60", MAXIMUM.
3. TRENCH SHALL BE CUT AS A GENERAL RULE A MINMUM OF 6" WIDER THAN NEEDED FOR CONDUIT/DUCTBANK.
4. METALLIC FOIL BRIGHT YELLOW WARNING TAPE.
5. MINIMUM OF 3" OF CONCRETE COVER SHALL BE PROVIDED ON REBARS.
6. RESTORE FINISHED GRADE TO ITS ORIGINAL CONDITION AFTER DUCT BANK INSTALLATION IS COMPLETED.
7. PERMANENT TRENCH PATCH SHALL EXTEND A MINIMUM OF 12" BEYOND THE EDGE OF TRENCH, IF EDGE OF TRENCH IS WITHIN 36" OF THE EDGE OF THE PAVEMENT, EXTEND PERMANENT PATCH TO THE ORIGINAL PAVEMENT EDGE.

Approved for Construction
Moffett Field Permit Board

Chief Building Official
Permit No. 11P038

ZONE	LETTER	DESCRIPTION	DRAWN	DATE	APPRVD

REVISIONS

DRAWN N.NIZAMOVA	DATE 9/21/11	
DESIGNED N.NIZAMOVA	DATE 9/21/11	
CHECKED J.McCUSKER	DATE 9-22-11	
PROJMGR F.JONES	DATE 9.22.11	
REQUESTED D.TRAN	DATE 9/22/11	
R&QA	DATE	
SAFETY	DATE	
SUPERVISOR S.FRANKEL	DATE OCT 21 2011	

REGISTERED PROFESSIONAL ENGINEER JAMES T. McCUSKER No. E013699 ELECTRICAL STATE OF CALIFORNIA

Ames Research Center
Moffett Field, California

RESTORATION OF ELECTRICAL DISTRIBUTION SYSTEM–HIGH VOLTAGE WP1
ELECTRICAL

TYPICAL MISCELLANEOUS DETAILS

SIZE	CAGE CODE	DWG NO.	REV
D	25307	A1---1001-E67	–
SCALE NONE		INDEX	SHEET 1 OF 1

FILE NAME: A1---1001-E067_1_RHV.DWG 9-21-11

60176753.0001

DWG: \\N213fs2\Proj\REDS\60176753 (K10018)_REDS - High Voltage\500 CAD\REDS_JAV-WP1_Shared-WP1\C\Sheet\A1---1001-E067_1_RHV.dwg Version: 17.1s (LMS Tech) User: polden
DATE: Sep 20, 2011 - 5:29:58 pm

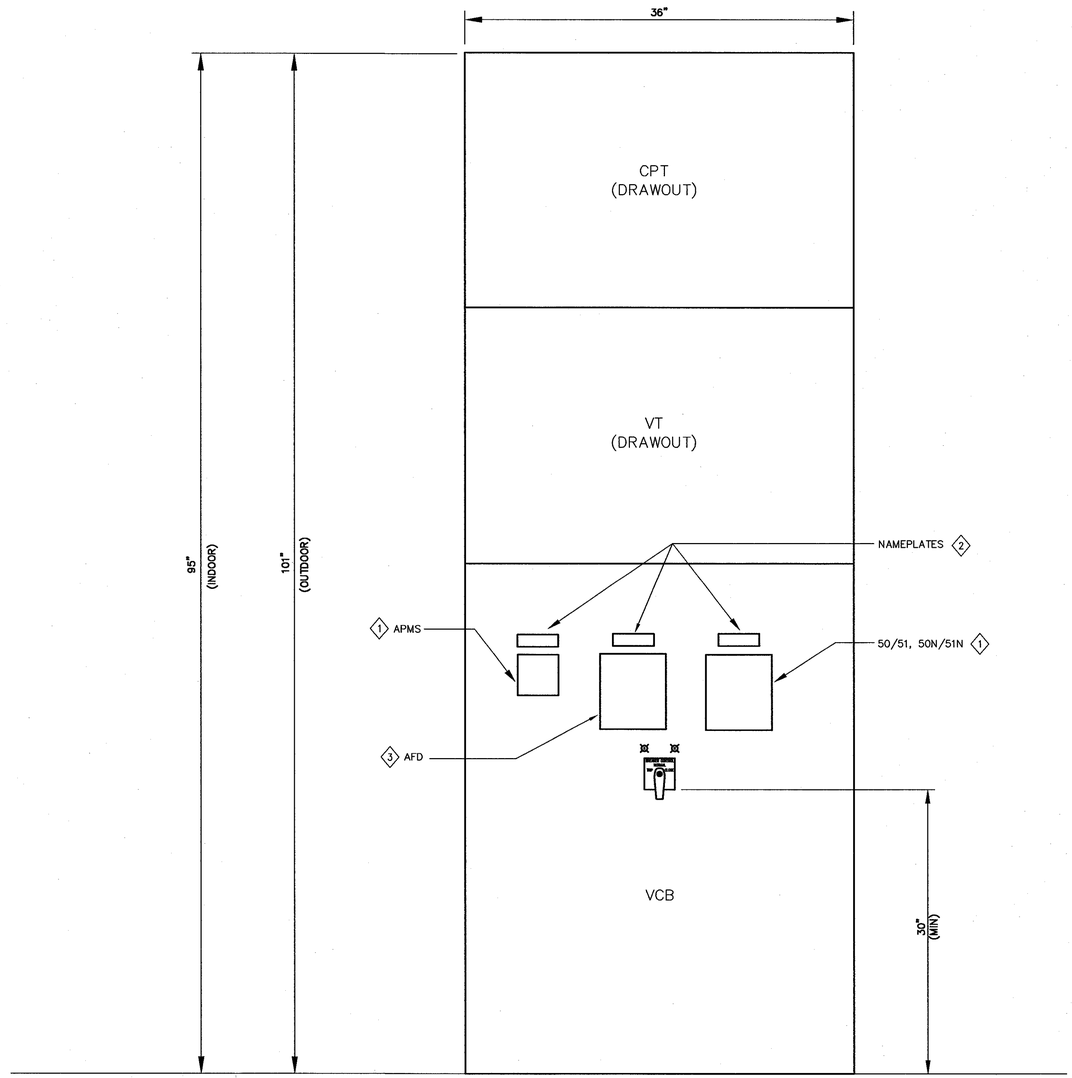

1 TYPICAL SWITCHGEAR ELEVATION
SCALE: NTS (INTERIOR VIEW WITH WEATHERTIGHT DOOR OPEN) (TYPICAL)

DWG NO.	SH.	REV
A1---1001-E68	1	–

SHEET NOTES

1. FOR GENERAL NOTES, SYMBOLS AND ABBREVIATIONS, SEE DRAWING G4.

KEY NOTES

1. INSTALLATION OF GFE EQUIPMENT, TO BE MOUNTED ON SWITCHGEAR, SHALL BE IN ACCORDANCE WITH DRAWING E64.
2. EQUIPMENT/DEVICE NAMEPLATES SHALL BE IN ACCORDANCE WITH ELECTRICAL NOTE 11 ON DRAWING E1 AND PER DRAWING E63.
3. INSTALL MASTER UNIT OF ARC FLASH DEVICE (AFD) ON DOOR BETWEEN APMS AND RELAY UNITS.

Approved for Construction
Moffett Field Permit Board

Chief Building Official
Permit No. 11P038

ZONE	LETTER	DESCRIPTION	DRAWN	DATE	APPRVD

REVISIONS

DRAWN N.NIZAMOVA		DATE 9/21/11
DESIGNED N.NIZAMOVA		DATE 9/21/11
CHECKED J.McCUSKER		DATE 9-21-11
PROJMGR F.JONES		DATE 9.23.11
REQUESTER D.TRAN		DATE 9/26/11
R&QA		DATE
SAFETY		DATE
SUPERVISOR S.FRANKEL		DATE OCT 21 2011

REGISTERED PROFESSIONAL ENGINEER
JAMES T. McCUSKER
No. E013699
ELECTRICAL
STATE OF CALIFORNIA

Ames Research Center
Moffett Field, California

RESTORATION OF ELECTRICAL DISTRIBUTION SYSTEM–HIGH VOLTAGE WP1
ELECTRICAL

TYPICAL
SWITCHGEAR
ELEVATION

SIZE	CAGE CODE		REV
D	25307	A 1---1001-E68	–
SCALE AS NOTED		INDEX	SHEET 1 OF 1

FILE NAME: A1---1001-E068_1_RHV 9-21-11

60176753.0001

DWG: \\N213FS2\Proj\REDS\60176753 (K10018)_REDS - High Voltage\500 CAD\REDS_HV-WP1_Shared-WP1\E\Sheet\A1---1001-E068_1_RHV.dwg Version: 17.1s (LMS Tech) User: palden
DATE: Sep 20, 2011 - 5:30:03 pm

DWG NO. A1---1001-E69 | SH. 1 | REV –

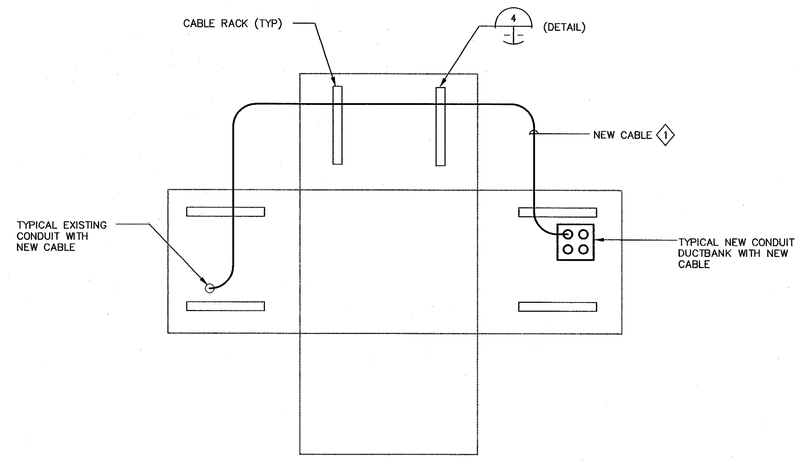

1 TYPICAL MH STRAIGHT CABLE ROUTING
SCALE: NTS

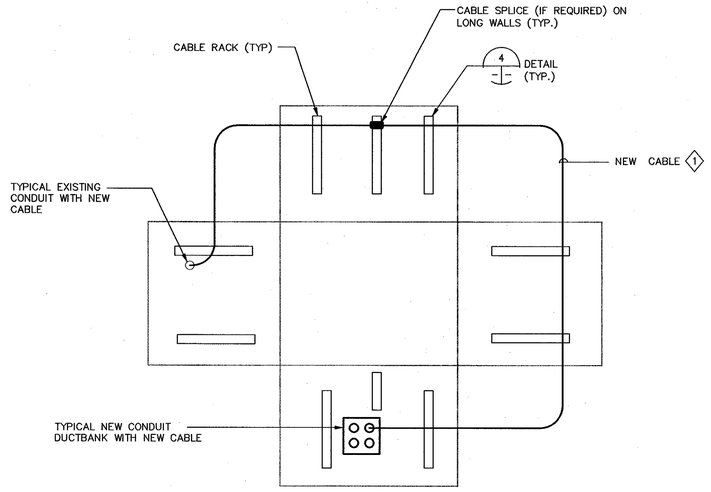

2 TYPICAL MH 270° CABLE ROUTING
SCALE: NTS

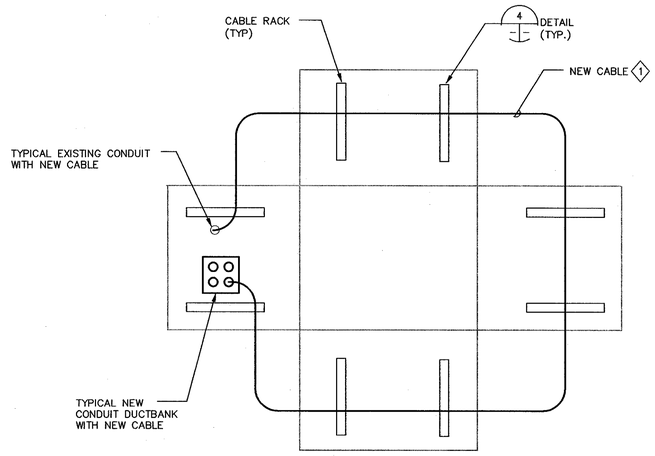

3 TYPICAL MH 360° CABLE ROUTING
SCALE: NTS

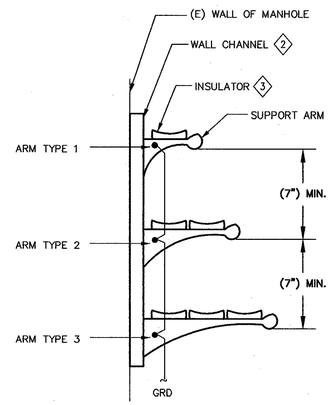

4 TYPICAL MULTIPLE CABLE RACK INSTALLATION
SCALE: NTS (SEE NOTE 1)

SHEET NOTES

1. FOR GENERAL NOTES, SYMBOLS AND ABBREVIATIONS, SEE DRAWING G4.
2. PROVIDE CABLE RACKS, CABLE RACK ARMS AND CABLE INSULATORS IN EACH MANHOLE AND/OR VAULT FOR SUPPORT OF NEW CABLE. THE EXACT NUMBER AND CONFIGURATION OF RACKS REQUIRED TO BE DETERMINED BY THE CONTRACTOR IN THE FIELD BASED ON EXISTING CONDITIONS, SEE GENERAL PROJECT NOTE 21 AND ELECTRICAL NOTE 19 ON DRAWING G4. CABLE RACKS SHALL BE INSTALLED AT LEAST (2) ON EACH SIDE, OR (3) EACH WHEREVER A CABLE SPLICE IS MADE OR ON LONGER WALL.

KEY NOTES

1. ROUTE NEW CABLE THE LONG DISTANCE AROUND THE MANHOLE TAKING ADVANTAGE OF THE MINIMUM INTERFERENCE FROM EXISTING CABLES, SPLICES AND EQUIPMENT WITHIN THE MANHOLE.
2. PROVIDE 2" CABLE RACK CHANNELS.
3. EACH CABLE INSULATOR SHOWN REPRESENTS SPACE ALLOCATION FOR 3-1/C #500KCMIL AND 1 #4/0 GND OR 3-1/C #350KCMIL AND 1 #4/0 GND AS SHOWN ON THE LAYOUT DRAWINGS.

Approved for Construction
Moffett Field Permit Board
Chief Building Official
Permit No. 11P038

ZONE	LETTER	DESCRIPTION	DRAWN	DATE	APPRVD
		REVISIONS			

DRAWN N.NIZAMOVA	DATE 9/21/11	
DESIGNED N.NIZAMOVA	DATE 9/21/11	
CHECKED J.McCUSKER	DATE 9-21-11	
PROJMGR F.JONES	DATE 9.22.11	
REQUESTER D.TRAN	DATE 9/22/11	
R&QA –	DATE	
SAFETY –	DATE	
SUPERVISOR S.FRANKEL	DATE OCT 21 2011	

REGISTERED PROFESSIONAL ENGINEER JAMES T. McCUSKER No. E013699 ELECTRICAL STATE OF CALIFORNIA

Ames Research Center
Moffett Field, California

RESTORATION OF ELECTRICAL DISTRIBUTION SYSTEM-HIGH VOLTAGE WP1
ELECTRICAL
TYPICAL CABLE ROUTING DETAILS

SIZE	CAGE CODE	REV
D	25307	A---1---1001-E69---–
SCALE AS NOTED	INDEX	SHEET 1 OF 1

FILE NAME: A1---1001-E69_1_RHV 9-21-11

60176753.0001

DWG: \\N21JFS2\Proj\REDS\60176753 (K10018)_REDS - High Voltage\500 CAD\REDS_HV-WP1_Shared-WP1\E\Sheet\A1---1001-E069_1_RHV.dwg Version: 17.1s (LMS Tech) User: palden
DATE: Sep 20, 2011 - 5:30:08 pm