FLIGHT PROJECTS BUILDING

NASA GODDARD SPACE FLIGHT CENTER

100% SUBMITTAL

AECOM

AECOM TECHNICAL SERVICES, INC.
3101 WILSON BOULEVARD
SUITE 900
ARLINGTON, VA 22201

T: 703-682-4900 F: 703.682.4901
www.aecom.com

SEAL AREA

BOARD OF ARCHITECTS
EDWARD W. WARNER
STATE OF MARYLAND

KEY PLAN

REV	DATE	DESCRIPTION	S&R BR.	CUSTOMER	PM	SECT. HEAD

	INITIALS	DATE
DRAWN BY	LA/NS	
CHECKED BY	BW/MW	
A-E MANAGER	EW	
ENVIRONMENTAL BRANCH	JH	
SAFETY BRANCH	CS	
CM	MMD	
PM	RWP	
CUSTOMER	JWB	
ENG. BRANCH	DGL	
GENERAL		

COVER SHEET

G-000

FLIGHT PROJECTS BUILDING

NATIONAL AERONAUTICS AND SPACE ADMINISTRATION

GODDARD SPACE FLIGHT CENTER GREENBELT, MARYLAND
FACILITIES MANAGEMENT DIVISION

DATE ISSUED	CoF CODE OR WR#	AECOM PROJECT NO.	SCALE
10/12/2012	12GXAZ	60187636	

FILE DATE: 10/29/2012 7:33:05 AM

SHEET NUMBER	SHEET NAME	35% SUBMITTAL	60% SUBMITTAL	90% SUBMITTAL	100% SUBMITTAL	05.11.2012 100% SUBMITTAL	06.15.2012 100% SUBMITTAL	07.11.2012 100% SUBMITTAL	07.23.2012 100% SUBMITTAL	10.12.2012 100% SUBMITTAL
GENERAL										
G-000	COVER SHEET	•	•	•	•	•	•	•	•	•
G-001	DRAWING LIST	•	•	•	•	•	•	•	•	•
G-002	GENERAL INFORMATION	•	•	•	•	•	•	•	•	•
LS-001	LIFE SAFETY CODE SUMMARY	•	•	•	•	•	•	•	•	•
LS-010	LEVEL 1 - LIFE SAFETY PLAN	•	•	•	•	•	•	•	•	•
LS-020	LEVEL 2 - LIFE SAFETY PLAN	•	•	•	•	•	•	•	•	•
LS-030	LEVEL 3 - LIFE SAFETY PLAN	•	•	•	•	•	•	•	•	•
LS-040	LEVEL 4 - LIFE SAFETY PLAN	•	•	•	•	•	•	•	•	•
LS-050	PENTHOUSE - LIFE SAFETY PLAN	•	•	•	•	•	•	•	•	•
CIVIL										
C-001	GENERAL CIVIL NOTES & LEGENDS	•	•	•	•	•	•	•	•	•
C-101	EXISTING CONDITIONS PLAN	•	•	•	•	•	•	•	•	•
C-102	DEMOLITION PLAN	•	•	•	•	•	•	•	•	•
C-103	LAYOUT AND PAVING PLAN	•	•	•	•	•	•	•	•	•
C-104	GRADING & DRAINAGE PLAN	•	•	•	•	•	•	•	•	•
C-105	UTIILITY PLAN	•	•	•	•	•	•	•	•	•
C-106	EROSION & SEDIMENT CONTROL PLAN PHASE 1		•	•	•	•	•	•	•	•
C-107	EROSION & SEDIMENT CONTROL PLAN PHASE 2		•	•	•	•	•	•	•	•
C-108	STORM WATER MANAGEMENT PLAN	•	•	•	•	•	•	•	•	
C-109	DRAINAGE AREA MAP	•	•	•	•	•	•	•	•	
C-201	PROFILES		•	•	•	•	•	•	•	•
C-202	PROFILES		•	•	•	•	•	•	•	•
C-203	PROFILES		•	•	•	•	•	•	•	•
C-401	STORM WATER MANAGEMENT ENLARGED PLAN		•	•	•	•	•	•	•	•
C-402	STORM WATER MANAGEMENT ENLARGED PLAN		•	•	•	•	•	•	•	•
C-403	SERVICE AREA ENLARGED PLAN		•	•	•	•	•	•	•	•
C-501	EROSION & SEDIMENT CONTROL NOTES		•	•	•	•	•	•	•	•
C-502	EROSION & SEDIMENT CONTROL NOTES		•	•	•	•	•	•	•	•
C-503	EROSION & SEDIMENT CONTROL DETAILS		•	•	•	•	•	•	•	•
C-504	EROSION & SEDIMENT CONTROL DETAILS		•	•	•	•	•	•	•	•
C-505	SWM CERTIFICATIONS AND DETAILS	•	•	•	•	•	•	•	•	•
C-506	STORMWATER MANAGEMENT DETAILS		•	•	•	•	•	•	•	•
C-507	STORMWATER MANAGEMENT DETAILS		•	•	•	•	•	•	•	•
C-511	SITE DETAILS	•	•	•	•	•	•	•	•	•
C-512	SITE DETAILS	•	•	•	•	•	•	•	•	•
C-513	UTILITY DETAILS			•	•	•	•	•	•	•
C-514	UTILITY DETAILS			•	•	•	•	•	•	•
C-515	UTILITY DETAILS			•	•	•	•	•	•	•
C-600	CONSTRUCTION STAKEOUT PLAN				•	•	•	•	•	•
C-601	STRUCTURE SCHEDULES & STAKEOUT DATA		•	•	•	•	•	•	•	•
LANDSCAPE										
L-100	OVERALL LANDSCAPE SITE PLAN	•	•	•	•	•	•	•	•	•
L-101	LANDSCAPE ENLARGEMENT SITE PLAN	•	•	•	•	•	•	•	•	•
L-201	ENTRY & HILLSIDE ENLARGEMENT PLANS	•	•	•	•	•	•	•	•	•
L-301	SITE SECTIONS	•	•							
L-501	SITE DETAILS	•	•	•	•	•	•	•	•	•
L-502	SITE DETAILS	•	•	•	•	•	•	•	•	•
LP-100	TREE PLANTING PLAN		•	•	•	•	•	•	•	•
LP-200	NE CORNER PLANTING ENLARGEMENT PLAN		•	•	•	•	•	•	•	•
LP-201	HILLSIDE PLANTING ENLARGEMENT PLAN		•	•	•	•	•	•	•	•
LP-202	NW CORNER PLANTING ENLARGEMENT PLAN		•	•	•	•	•	•	•	•
LP-203	SOUTH PLANTING ENLARGEMENT PLAN		•	•	•	•	•	•	•	•
LP-204	BMP PLANTING ENLARGEMENT PLANS		•	•	•	•	•	•	•	•
LP-205	BMP PLANTING ENLARGEMENT PLANS		•	•	•	•	•	•	•	•
LP-206	BMP PLANTING ENLARGEMENT PLANS		•	•	•	•	•	•	•	
LP-501	PLANTING SCHEDULE AND DETAILS		•	•	•	•	•	•	•	•
LP-502	PLANTING DETAILS		•	•	•	•	•	•	•	•
ARCHITECTURE										
A-101	LEVEL 1 - FLOOR PLAN OVERALL	•	•	•	•	•	•	•	•	•
A-101a	LEVEL 1 - FLOOR PLAN SEGMENT A	•	•	•	•	•	•	•	•	•
A-101b	LEVEL 1 - FLOOR PLAN SEGMENT B	•	•	•	•	•	•	•	•	•
A-102	LEVEL 2 - FLOOR PLAN OVERALL	•	•	•	•	•	•	•	•	•
A-102a	LEVEL 2 - FLOOR PLAN SEGMENT A	•	•	•	•	•	•	•	•	•
A-102b	LEVEL 2 - FLOOR PLAN SEGMENT B	•	•	•	•	•	•	•	•	•
A-103	LEVEL 3 - FLOOR PLAN OVERALL	•	•	•	•	•	•	•	•	•
A-103a	LEVEL 3 - FLOOR PLAN SEGMENT A	•	•	•	•	•	•	•	•	•
A-103b	LEVEL 3 - FLOOR PLAN SEGMENT B	•	•	•	•	•	•	•	•	•
A-104	LEVEL 4 - FLOOR PLAN OVERALL	•	•	•	•	•	•	•	•	•
A-104a	LEVEL 4 - FLOOR PLAN SEGMENT A	•	•	•	•	•	•	•	•	•
A-104b	LEVEL 4 - FLOOR PLAN SEGMENT B	•	•	•	•	•	•	•	•	•
A-105	PENTHOUSE - FLOOR PLAN OVERALL	•	•	•	•	•	•	•	•	•
A-106	PENTHOUSE PLAN	•	•	•	•	•	•	•	•	•
A-107	OVERALL ROOF PLAN		•	•	•	•	•	•	•	•
A-201a	LEVEL 1 - REFLECTED CEILING PLAN SEGMENT A	•	•	•	•	•	•	•	•	•
A-201b	LEVEL 1 - REFLECTED CEILING PLAN SEGMENT B	•	•	•	•	•	•	•	•	•
A-202a	LEVEL 2 - REFLECTED CEILING PLAN SEGMENT A	•	•	•	•	•	•	•	•	•
A-202b	LEVEL 2 - REFLECTED CEILING PLAN SEGMENT B	•	•	•	•	•	•	•	•	•
A-203a	LEVEL 3 - REFLECTED CEILING PLAN SEGMENT A	•	•	•	•	•	•	•	•	•
A-203b	LEVEL 3 - REFLECTED CEILING PLAN SEGMENT B	•	•	•	•	•	•	•	•	•
A-204a	LEVEL 4 - REFLECTED CEILING PLAN SEGMENT A	•	•	•	•	•	•	•	•	•
A-204b	LEVEL 4 - REFLECTED CEILING PLAN SEGMENT B	•	•	•	•	•	•	•	•	•
A-211	SLAB EDGE PLAN - LEVEL 1				•	•	•	•	•	•
A-212	SLAB EDGE PLAN - LEVEL 2				•	•	•	•	•	•
A-213	SLAB EDGE PLAN - LEVEL 3				•	•	•	•	•	•
A-214	SLAB EDGE PLAN - LEVEL 4				•	•	•	•	•	•
A-215	SLAB EDGE PLAN - PH LEVEL				•	•	•	•	•	•
A-216	SLAB EDGE PLAN - PH ROOF LEVEL				•	•	•	•	•	•
A-301	BUILDING ELEVATIONS	•	•	•	•	•	•	•	•	•
A-311	ENLARGED BUILDING ELEVATIONS	•	•	•	•	•	•	•	•	•
A-312	ENLARGED BUILDING ELEVATIONS	•	•	•	•	•	•	•	•	•
A-313	ENLARGED BUILDING ELEVATIONS	•	•	•	•	•	•	•	•	•
A-314	ENLARGED BUILDING ELEVATIONS				•	•	•	•	•	•
A-321	BUILDING SECTIONS			•	•	•	•	•	•	•

SHEET NUMBER	SHEET NAME	35% SUBMITTAL	60% SUBMITTAL	90% SUBMITTAL	100% SUBMITTAL	05.11.2012 100% SUBMITTAL	06.15.2012 100% SUBMITTAL	07.11.2012 100% SUBMITTAL	07.23.2012 100% SUBMITTAL	10.12.2012 100% SUBMITTAL
A-401	WALL SECTION			•	•	•	•	•	•	•
A-402	WALL SECTION			•	•	•	•	•	•	•
A-403	WALL SECTION			•	•	•	•	•	•	•
A-404	PEDESTRIAN BRIDGE DESIGN			•	•	•	•	•	•	•
A-411	EXTERIOR WALL TYPES, ROOF, INSULATION AND PANEL TYPE			•	•	•	•	•	•	•
A-412	EXTERIOR ENVELOPE MATERIAL/ASSEMBLY TYPES			•	•	•	•	•	•	•
A-413	EXTERIOR WINDOW TYPES				•	•	•	•	•	•
A-501	EXTERIOR ENCLOSURE CONCEPT			•	•	•	•	•	•	•
A-502	EXTERIOR ENCLOSURE CONCEPT			•	•	•	•	•	•	•
A-503	EXTERIOR ENCLOSURE CONCEPT			•	•	•	•	•	•	•
A-504	EXTERIOR ENVELOPE CONCEPT			•	•	•	•	•	•	•
A-505	EXTERIOR ENVELOPE CONCEPT				•	•	•	•	•	•
A-506	EXTERIOR ENVELOPE CONCEPT				•	•	•	•	•	•
A-507	DETAIL DRAWINGS FOR MOCK-UP OF EXTERIOR MATERIAL				•	•	•	•	•	•
A-508	EXTERIOR WALL CONCEPTS - BLUE WALL				•	•	•	•	•	•
A-601	PLAN DETAILS			•	•	•	•	•	•	•
A-602	PLAN DETAILS			•	•	•	•	•	•	•
A-603	PLAN DETAILS			•	•	•	•	•	•	•
A-604	PLAN DETAILS				•	•	•	•	•	•
A-605	PLAN DETAILS				•	•	•	•	•	•
A-606	PLAN DETAILS				•	•	•	•	•	•
A-611	SECTIONAL DETAILS			•	•	•	•	•	•	•
A-612	SECTIONAL DETAILS			•	•	•	•	•	•	•
A-613	SECTIONAL DETAILS			•	•	•	•	•	•	•
A-614	SECTIONAL DETAILS				•	•	•	•	•	•
A-615	SECTIONAL DETAILS				•	•	•	•	•	•
A-616	SECTIONAL DETAILS				•	•	•	•	•	•
A-617	SECTIONAL DETAILS				•	•	•	•	•	•
A-701	STAIR #1 & 2 - ENLARGED PLANS	•	•	•	•	•	•	•	•	•
A-702	STAIR #1 - SECTIONS	•	•	•	•	•	•	•	•	•
A-703	STAIR #2 - SECTIONS	•	•	•	•	•	•	•	•	•
A-704	STAIR #3 - ENLARGED PLANS		•	•	•	•	•	•	•	•
A-705	STAIR #3 - SECTIONS		•	•	•	•	•	•	•	•
A-706	STAIR #3 - 3D VIEW			•	•	•	•	•	•	•
A-711	STAIR DETAILS		•	•	•	•	•	•	•	•
A-712	STAIR DETAILS			•	•	•	•	•	•	•
A-713	STAIR DETAILS			•	•	•	•	•	•	•
A-714	STAIR DETAILS			•	•	•	•	•	•	•
A-721	ELEVATOR - GENERAL INFORMATION	•	•	•	•	•	•	•	•	•
A-722	ELEVATORS - PLANS				•	•	•	•	•	•
A-723	ELEVATORS - SECTIONS				•	•	•	•	•	•
A-724	ELEVATORS				•	•	•	•	•	•
A-725	ELEVATORS				•	•	•	•	•	•
A-731	DUMPSTER			•	•	•	•	•	•	•
A-801	WALL PARTITION TYPE			•	•	•	•	•	•	•
A-802	WALL PARTITION TYPE			•	•	•	•	•	•	•
A-811	DOOR SCHEDULE	•	•	•	•	•	•	•	•	•
A-812	DOOR SCHEDULE	•	•	•	•	•	•	•	•	•
A-813	DOOR DETAILS		•	•	•	•	•	•	•	•
A-821	ENLARGED - RESTROOM/ SHOWER PLANS & ELEVATIONS			•	•	•	•	•	•	•
A-822	LAVATORY DETAILS			•	•	•	•	•	•	•
A-901	FINISH MATERIALS LEGEND			•	•	•	•	•	•	•
A-902	SIGNAGE TYPES & DETAILS			•	•	•	•	•	•	•
A-911a	LEVEL 1 - FINISH PLAN SEGMENT A	•	•	•	•	•	•	•	•	•
A-911b	LEVEL 1 - FINISH PLAN SEGMENT B	•	•	•	•	•	•	•	•	•
A-912a	LEVEL 2 - FINISH PLAN SEGMENT A	•	•	•	•	•	•	•	•	•
A-912b	LEVEL 2 - FINISH PLAN SEGMENT B	•	•	•	•	•	•	•	•	•
A-913a	LEVEL 3 - FINISH PLAN SEGMENT A	•	•	•	•	•	•	•	•	•
A-913b	LEVEL 3 - FINISH PLAN SEGMENT B	•	•	•	•	•	•	•	•	•
A-914a	LEVEL 4 - FINISH PLAN SEGMENT A	•	•	•	•	•	•	•	•	•
A-914b	LEVEL 4 - FINISH PLAN SEGMENT B	•	•	•	•	•	•	•	•	•
A-921	ENLARGED FLOOR PLAN - LOBBY LEVEL 1		•	•	•	•	•	•	•	•
A-922	ENLARGED FLOOR PLAN - LOBBY LEVEL 2-4			•	•	•	•	•	•	•
A-931	INTERIOR ELEVATIONS - LOBBY & ELEVATOR CAB			•	•	•	•	•	•	•
A-932	INTERIOR ELEVATIONS - SYMPOSIUM & LARGE CONFERENCE ROOM			•	•	•	•	•	•	•
A-933	INTERIOR ELEVATIONS - TYPICAL SUITE			•	•	•	•	•	•	•
A-934	INTERIOR ELEVATIONS - TYPICAL SUITE CIRCULATION			•	•	•	•	•	•	•
A-935	INTERIOR ELEVATIONS - CODE 101			•	•	•	•	•	•	•
A-936	INTERIOR ELEVATIONS - LEVEL 1			•	•	•	•	•	•	•
A-937	INTERIOR ELEVATIONS & DETAILS DEMOUNTABLE PARTITIONS			•	•	•	•	•	•	•
A-938	INTERIOR ELEVATIONS - LOBBY DISPLAY CASE				•	•	•	•	•	•
A-941	INTERIOR DETAILS MILLWORK			•	•	•	•	•	•	•
A-942	INTERIOR DETAILS MILLWORK DISPLAY CASE			•	•	•	•	•	•	
A-943	INTERIOR DETAILS INTERIOR WALL SECTIONS			•	•	•	•	•	•	•
A-944	INTERIOR DETAILS INTERIOR WALL SECTIONS			•	•	•	•	•	•	•
A-945	INTERIOR DETAILS BANQUETTE & WOOD PANELING			•	•	•	•	•	•	•
A-946	INTERIOR DETAILS DOOR & GLAZING			•	•	•	•	•	•	•
A-947	INTERIOR DETAILS PANTRY BENCH				•	•	•	•	•	•
A-948	CEILING DETAILS			•	•	•	•	•	•	•
A-991	LEVEL 1 - FURNITURE PLAN (NIC)	•	•	•	•	•	•	•	•	•
A-992	LEVEL 2 - FURNITURE PLAN (NIC)	•	•	•	•	•	•	•	•	•
A-993	LEVEL 3 - FURNITURE PLAN (NIC)	•	•	•	•	•	•	•	•	•
A-994	LEVEL 4 - FURNITURE PLAN (NIC)	•	•	•	•	•	•	•	•	•
STRUCTURAL										
S-001	STRUCTURAL GENERAL NOTES	•	•	•	•	•	•	•	•	•
S-002	STRUCTURAL GENERAL NOTES	•	•	•	•	•	•	•	•	•
S-003	STRUCTURAL GENERAL NOTES - SPECIAL INSPECTIONS			•	•	•	•	•	•	•
S-004	STRUCTURAL GENERAL NOTES - COMPONENTS AND CLADDING			•	•	•	•	•	•	•
S-101a	FOUNDATION PLAN - SEGMENT A	•	•	•	•	•	•	•	•	•
S-101b	FOUNDATION PLAN - SEGMENT B	•	•	•	•	•	•	•	•	•
S-102a	LEVEL 2 FRAMING PLAN - SEGMENT A	•	•	•	•	•	•	•	•	•
S-102b	LEVEL 2 FRAMING PLAN - SEGMENT B	•	•	•	•	•	•	•	•	•
S-103a	LEVEL 3 FRAMING PLAN - SEGMENT A	•	•	•	•	•	•	•	•	•
S-103b	LEVEL 3 FRAMING PLAN - SEGMENT B	•	•	•	•	•	•	•	•	•
S-104a	LEVEL 4 FRAMING PLAN - SEGMENT A	•	•	•	•	•	•	•	•	•
S-104b	LEVEL 4 FRAMING PLAN - SEGMENT B	•	•	•	•	•	•	•	•	•
S-105a	ROOF FRAMING PLAN - SEGMENT A	•	•	•	•	•	•	•	•	•
S-105b	ROOF FRAMING PLAN - SEGMENT B	•	•	•	•	•	•	•	•	•
S-106a	PENTHOUSE ROOF FRAMING PLAN - SEGMENT A	•	•	•	•	•	•	•	•	•
S-106b	PENTHOUSE ROOF FRAMING PLAN - SEGMENT B	•	•	•	•	•	•	•	•	•

SHEET NUMBER	SHEET NAME	35% SUBMITTAL	60% SUBMITTAL	90% SUBMITTAL	100% SUBMITTAL	05.11.2012 100% SUBMITTAL	06.15.2012 100% SUBMITTAL	07.11.2012 100% SUBMITTAL	07.23.2012 100% SUBMITTAL	10.12.2012 100% SUBMITTAL
S-201	FRAME ELEVATIONS	•	•	•	•	•	•	•	•	•
S-202	FRAME ELEVATIONS		•	•	•	•	•	•	•	•
S-301	TYPICAL FOUNDATION DETAILS		•	•	•	•	•	•	•	•
S-302	TYPICAL FOUNDATION DETAILS		•	•	•	•	•	•	•	•
S-303	TYPICAL FOUNDATION DETAILS			•	•	•	•	•	•	•
S-304	TYPICAL FOUNDATION DETAILS			•	•	•	•	•	•	•
S-311	STEEL CONNECTION DETAILS		•	•	•	•	•	•	•	•
S-312	STEEL CONNECTION DETAILS		•	•	•	•	•	•	•	•
S-313	STEEL CONNECTION DETAILS		•	•	•	•	•	•	•	•
S-314	STEEL CONNECTION DETAILS			•	•	•	•	•	•	•
S-315	STEEL CONNECTION DETAILS				•	•	•	•	•	•
S-321	TYPICAL MASONRY DETAILS			•	•	•	•	•	•	•
S-401	PEDESTRIAN BRIDGE PLANS & DETAILS			•	•	•	•	•	•	•
S-501	STAIR #1 & #2 PARTIAL FRAMING PLANS			•	•	•	•	•	•	•
S-601	STEEL COLUMN SCHEDULE	•	•	•	•	•	•	•	•	•
S-602	STEEL COLUMN SCHEDULE	•	•	•	•	•	•	•	•	•
MECHANICAL										
M-001	MECHANICAL ABBERVATIONS	•	•	•	•	•	•	•	•	•
M-002	MECHANICAL SCHEDULES		•	•	•	•	•	•	•	•
M-003	MECHANCIAL SCHEDULES		•	•	•	•	•	•	•	•
M-004	MECHANICAL SCHEDULES		•	•	•	•	•	•	•	•
M-005	MECHANICAL SCHEDULES			•	•	•	•	•	•	•
M-006	MECHANICAL SCHEDULES			•	•	•	•	•	•	•
M-007	MECHANICAL SCHEDULES			•	•	•	•	•	•	•
MH-101	LEVEL 1 3D OVERVIEW		•	•	•	•	•	•	•	•
MH-101A	LEVEL 1 - HVAC FLOOR PLAN SEGMENT A	•	•	•	•	•	•	•	•	•
MH-101B	LEVEL 1 - HVAC FLOOR PLAN SEGMENT B	•	•	•	•	•	•	•	•	•
MH-102	LEVEL 2 3D OVERVIEW		•	•	•	•	•	•	•	•
MH-102A	LEVEL 2 - HVAC FLOOR PLAN SEGMENT A	•	•	•	•	•	•	•	•	•
MH-102B	LEVEL 2 - HVAC FLOOR PLAN SEGMENT B	•	•	•	•	•	•	•	•	•
MH-103	LEVEL 3 - 3D OVERVIEW		•	•	•	•	•	•	•	•
MH-103A	LEVEL 3 - HVAC FLOOR PLAN SEGMENT A	•	•	•	•	•	•	•	•	•
MH-103B	LEVEL 3 - HVAC FLOOR PLAN SEGMENT B	•	•	•	•	•	•	•	•	•
MH-104	LEVEL 4 3D OVERVIEW		•	•	•	•	•	•	•	•
MH-104A	LEVEL 4 - HVAC FLOOR PLAN SEGMENT A	•	•	•	•	•	•	•	•	•
MH-104B	LEVEL 4 - HVAC FLOOR PLAN SEGMENT B	•	•	•	•	•	•	•	•	•
MH-105	PENTHOUSE 3D OVERVIEW	•	•	•	•	•	•	•	•	•
MH-105A	PENTHOUSE - HVAC FLOOR PLAN		•	•	•	•	•	•	•	•
MP-101	LEVEL 1 - 3D OVERVIEW PIPING			•	•	•	•	•	•	•
MP-101A	LEVEL 1 - PIPING FLOOR PLAN SEGMENT A	•	•	•	•	•	•	•	•	•
MP-101B	LEVEL 1 - PIPING FLOOR PLAN SEGMENT B	•	•	•	•	•	•	•	•	•
MP-102	LEVEL 2 - 3D OVERVIEW PIPING			•	•	•	•	•	•	•
MP-102A	LEVEL 2 - PIPING FLOOR PLAN SEGMENT A	•	•	•	•	•	•	•	•	•
MP-102B	LEVEL 2 - PIPING FLOOR PLAN SEGMENT B	•	•	•	•	•	•	•	•	•
MP-103	LEVEL 3 - 3D OVERVIEW PIPING			•	•	•	•	•	•	•
MP-103A	LEVEL 3 - PIPING FLOOR PLAN SEGMENT A	•	•	•	•	•	•	•	•	•
MP-103B	LEVEL 3 - PIPING FLOOR PLAN SEGMENT B	•	•	•	•	•	•	•	•	•
MP-104	LEVEL 4 - 3D OVERVIEW PIPING			•	•	•	•	•	•	•
MP-104A	LEVEL 4 - PIPING FLOOR PLAN SEGMENT A	•	•	•	•	•	•	•	•	•
MP-104B	LEVEL 4 - PIPING FLOOR PLAN SEGMENT B	•	•	•	•	•	•	•	•	•
MP-105	PENTHOUSE - 3D OVERVIEW PIPING			•	•	•	•	•	•	•
MP-105A	PENTHOUSE - PIPING FLOOR PLAN	•	•	•	•	•	•	•	•	•
M-301	MECHANICAL SECTIONS			•	•	•	•	•	•	•
M-401	MECHANICAL ENLARGED PLANS		•	•	•	•	•	•	•	•
M-501	MECHANICAL DETAILS		•	•	•	•	•	•	•	•
M-502	MECHANICAL DETAILS		•	•	•	•	•	•	•	•
M-503	MECHANICAL DETAILS		•	•	•	•	•	•	•	•
M-504	MECHANICAL DETAILS		•	•	•	•	•	•	•	•
M-505	MECHANICAL DETAILS			•	•	•	•	•	•	•
M-506	MECHANICAL DETAILS				•	•	•	•	•	•
M-601	MECHANICAL RISER DIAGRAMS	•	•	•	•	•	•	•	•	•
M-602	MECHANICAL RISER DIAGRAMS	•	•	•	•	•	•	•	•	•
M-701	CONTROL SYSTEMS			•	•	•	•	•	•	•
M-702	CONTROL SYSTEMS			•	•	•	•	•	•	•
M-703	CONTROL SYSTEMS			•	•	•	•	•	•	•
M-704	CONTROL SYSTEMS			•	•	•	•	•	•	•
M-705	CONTROL SYSTEMS			•	•	•	•	•	•	•
M-706	CONTROL SYSTEMS			•	•	•	•	•	•	•
ELECTRICAL										
E-001	SYMBOLS AND LEGENDS	•	•	•	•	•	•	•	•	•
E-002	CONTROL LOGIC DIAGRAM					•	•	•	•	•
ES-101	ELECTRICAL SITE PLAN	•	•	•	•	•	•	•	•	•
E-101a	LEVEL 1 - ELECTRICAL LIGHTING PLAN SEGMENT A	•	•	•	•	•	•	•	•	•
E-101b	LEVEL 1 - ELECTRICAL LIGHTING PLAN SEGMENT B	•	•	•	•	•	•	•	•	•
E-102a	LEVEL 2 - ELECTRICAL LIGHTING PLAN SEGMENT A	•	•	•	•	•	•	•	•	•
E-102b	LEVEL 2 - ELECTRICAL LIGHTING PLAN SEGMENT B	•	•	•	•	•	•	•	•	•
E-103a	LEVEL 3 - ELECTRICAL LIGHTING PLAN SEGMENT A	•	•	•	•	•	•	•	•	•
E-103b	LEVEL 3 - ELECTRICAL LIGHTING PLAN SEGMENT B	•	•	•	•	•	•	•	•	•
E-104a	LEVEL 4 - ELECTRICAL LIGHTING PLAN SEGMENT A	•	•	•	•	•	•	•	•	•
E-104b	LEVEL 4 - ELECTRICAL LIGHTING PLAN SEGMENT B	•	•	•	•	•	•	•	•	•
E-105a	PENTHOUSE - ELECTRICAL LIGHTING PLAN SEGMENT A	•	•	•	•	•	•	•	•	•
E-105b	PENTHOUSE - ELECTRICAL LIGHTING PLAN SEGMENT B	•	•	•	•	•	•	•	•	•
E-201a	LEVEL 1 - ELECTRICAL POWER PLAN SEGMENT A	•	•	•	•	•	•	•	•	•
E-201b	LEVEL 1 - ELECTRICAL POWER PLAN SEGMENT B	•	•	•	•	•	•	•	•	•
E-202a	LEVEL 2 - ELECTRICAL POWER PLAN SEGMENT A	•	•	•	•	•	•	•	•	•
E-202b	LEVEL 2 - ELECTRICAL POWER PLAN SEGMENT B	•	•	•	•	•	•	•	•	•
E-203a	LEVEL 3 - ELECTRICAL POWER PLAN SEGMENT A	•	•	•	•	•	•	•	•	•
E-203b	LEVEL 3 - ELECTRICAL POWER PLAN SEGMENT B	•	•	•	•	•	•	•	•	•
E-204a	LEVEL 4 - ELECTRICAL POWER PLAN SEGMENT A	•	•	•	•	•	•	•	•	•
E-204b	LEVEL 4 - ELECTRICAL POWER PLAN SEGMENT B	•	•	•	•	•	•	•	•	•
E-205a	PENTHOUSE - ELECTRICAL POWER PLAN SEGMENT A	•	•	•	•	•	•	•	•	•
E-205b	PENTHOUSE - ELECTRICAL POWER PLAN SEGMENT B	•	•	•	•	•	•	•	•	•
E-206a	LIGHTNING PROTECTION PLAN SEGMENT A			•	•	•	•	•	•	•
E-206b	LIGHTNING PROTECTION PLAN SEGMENT B			•	•	•	•	•	•	•
E-600	ELECTRICAL ONE-LINE RISER DIAGRAM		•	•	•	•	•	•	•	•
E-601	ELECTRICAL GROUNDING RISER DIAGRAM	•		•	•	•	•	•	•	•
E-701	ELECTRICAL LIGHT FIXTURE SCHEDULE		•	•	•	•	•	•	•	•

SHEET NUMBER	SHEET NAME	35% SUBMITTAL	60% SUBMITTAL	90% SUBMITTAL	100% SUBMITTAL	05.11.2012 100% SUBMITTAL	06.15.2012 100% SUBMITTAL	07.11.2012 100% SUBMITTAL	07.23.2012 100% SUBMITTAL	10.12.2012 100% SUBMITTAL
E-800	ELECTRICAL DETAILS			•	•	•	•	•	•	•
E-801	ELECTRICAL DETAILS			•	•	•	•	•	•	•
E-802	ELECTRICAL SCHEDULES					•	•	•	•	•
E-900	ELECTRICAL PANEL SCHEDULES		•	•	•	•	•	•	•	•
E-901	ELECTRICAL PANEL SCHEDULES		•	•	•	•	•	•	•	•
E-902	ELECTRICAL PANEL SCHEDULES		•	•	•	•	•	•	•	•
E-903	ELECTRICAL PANEL SCHEDULES		•	•	•	•	•	•	•	•
E-904	ELECTRICAL PANEL SCHEDULES				•	•	•	•	•	•
E-905	ELECTRICAL PANEL SCHEDULES				•	•	•	•	•	•
E-906	ELECTRICAL PANEL SCHEDULES				•	•	•	•	•	•
E-907	ELECTRICAL PANEL SCHEDULES				•	•	•	•	•	•
PLUMBING										
P-001	PLUMBING ABBREVIATIONS, NOTES, & SYMBOLS	•	•	•	•	•	•	•	•	•
P-101A	LEVEL 1 - PLUMBING PLAN – SEGMENT A	•	•	•	•	•	•	•	•	•
P-101B	LEVEL 1 - PLUMBING PLAN – SEGMENT B	•	•	•	•	•	•	•	•	•
P-102A	LEVEL 2 - PLUMBING PLAN – SEGMENT A		•	•	•	•	•	•	•	•
P-102B	LEVEL 2 - PLUMBING PLAN – SEGMENT B	•	•	•	•	•	•	•	•	•
P-103A	LEVEL 3 - PLUMBING PLAN – SEGMENT A		•	•	•	•	•	•	•	•
P-103B	LEVEL 3 - PLUMBING PLAN – SEGMENT B	•	•	•	•	•	•	•	•	•
P-104A	LEVEL 4 - PLUMBING PLAN – SEGMENT A		•	•	•	•	•	•	•	•
P-104B	LEVEL 4 - PLUMBING PLAN – SEGMENT B	•	•	•	•	•	•	•	•	•
P-105A	MAIN ROOF/PENTHOUSE PLUMBING PLAN - SEGMENT A		•	•	•	•	•	•	•	•
P-105B	MAIN ROOF/PENTHOUSE PLUMBING PLAN - SEGMENT B		•	•	•	•	•	•	•	•
P-106	PENTHOUSE ROOF PLUMBING PLAN		•	•	•	•	•	•	•	•
P-401	LEVEL 1 - ENLARGED PLUMBING PLANS		•	•	•	•	•	•	•	•
P-402	LEVEL 2,3, & 4 - ENLARGED PLUMBING PLANS		•	•	•	•	•	•	•	•
P-501	PLUMBING DETAILS			•	•	•	•	•	•	•
P-601	PLUMBING SCHEDULES		•	•	•	•	•	•	•	•
P-701	DOMESTIC & NON-POTABLE WATER RISER DIAGRAMS		•	•	•	•	•	•	•	•
P-702	SANITARY RISER DIAGRAMS		•	•	•	•	•	•	•	•
P-703	STORM DRAIN RISER DIAGRAMS		•	•	•	•	•	•	•	•
P-704	OVERFLOW DRAIN RISER DIAGRAM		•	•	•	•	•	•	•	•
FIRE PROTECTION										
FP-001	FIRE PROTECTION LEGEND, ABBREVIATIONS & SYMBOLS		•	•	•	•	•	•	•	•
FP-101a	LEVEL 1 - FIRE PROTECTION PLAN SEGMENT A	•	•	•	•	•	•	•	•	•
FP-101b	LEVEL 1 - FIRE PROTECTION PLAN SEGMENT B	•	•	•	•	•	•	•	•	•
FP-102a	LEVEL 2 - FIRE PROTECTION PLAN SEGMENT A	•	•	•	•	•	•	•	•	•
FP-102b	LEVEL 2 - FIRE PROTECTION PLAN SEGMENT B	•	•	•	•	•	•	•	•	•
FP-103a	LEVEL 3 - FIRE PROTECTION PLAN SEGMENT A	•	•	•	•	•	•	•	•	•
FP-103b	LEVEL 3 - FIRE PROTECTION PLAN SEGMENT B	•	•	•	•	•	•	•	•	•
FP-104a	LEVEL 4 - FIRE PROTECTION PLAN SEGMENT A	•	•	•	•	•	•	•	•	•
FP-104b	LEVEL 4 - FIRE PROTECTION PLAN SEGMENT B	•	•	•	•	•	•	•	•	•
FP-105	PENTHOUSE - FIRE PROTECTION PLAN	•	•	•	•	•	•	•	•	•
FP-501	FIRE PROTECTION DETAILS		•	•	•	•	•	•	•	•
FP-601	FIRE PROTECTION DIAGRAMS			•	•	•	•	•	•	•
FA-001	FIRE ALARM LEGEND, ABBREVIATIONS, AND SYMBOLS		•	•	•	•	•	•	•	•
FA-101a	LEVEL 1 - FIRE ALARM PLAN SEGMENT A	•	•	•	•	•	•	•	•	•
FA-101b	LEVEL 1 - FIRE ALARM PLAN SEGMENT B	•	•	•	•	•	•	•	•	•
FA-102a	LEVEL 2 - FIRE ALARM PLAN SEGMENT A	•	•	•	•	•	•	•	•	•
FA-102b	LEVEL 2 - FIRE ALARM PLAN SEGMENT B	•	•	•	•	•	•	•	•	•
FA-103a	LEVEL 3 - FIRE ALARM PLAN SEGMENT A	•	•	•	•	•	•	•	•	•
FA-103b	LEVEL 3 - FIRE ALARM PLAN SEGMENT B	•	•	•	•	•	•	•	•	•
FA-104a	LEVEL 4 - FIRE ALARM PLAN SEGMENT A	•	•	•	•	•	•	•	•	•
FA-104b	LEVEL 4 - FIRE ALARM PLAN SEGMENT B	•	•	•	•	•	•	•	•	•
FA-105	PENTHOUSE - FIRE ALARM PLAN	•	•	•	•	•	•	•	•	•
FA-501	FIRE ALARM DETAILS		•	•	•	•	•	•	•	•
FA-601	FIRE ALARM DIAGRAMS		•	•	•	•	•	•	•	•
FA-602	FIRE ALARM DIAGRAMS		•	•	•	•	•	•	•	•
TELECOMMUNICATIONS										
T-101a	LEVEL 1 - ELECTRICAL TELECOMM. PLAN SEGMENT A	•	•	•	•	•	•	•	•	•
T-101b	LEVEL 1 - ELECTRICAL TELECOMM. PLAN SEGMENT B	•	•	•	•	•	•	•	•	•
T-102a	LEVEL 2 - ELECTRICAL TELECOMM. PLAN SEGMENT A	•	•	•	•	•	•	•	•	•
T-102b	LEVEL 2 - ELECTRICAL TELECOMM. PLAN SEGMENT B	•	•	•	•	•	•	•	•	•
T-103a	LEVEL 3 - ELECTRICAL TELECOMM. PLAN SEGMENT A	•	•	•	•	•	•	•	•	•
T-103b	LEVEL 3 - ELECTRICAL TELECOMM. PLAN SEGMENT B	•	•	•	•	•	•	•	•	•
T-104a	LEVEL 4 - ELECTRICAL TELECOMM. PLAN SEGMENT A	•	•	•	•	•	•	•	•	•
T-104b	LEVEL 4 - ELECTRICAL TELECOMM. PLAN SEGMENT B	•	•	•	•	•	•	•	•	•
T-105a	PENTHOUSE - ELECTRICAL TELECOMM. PLAN SEGMENT A	•	•	•						•
T-105b	PENTHOUSE - ELECTRICAL TELECOMM. PLAN SEGMENT B	•	•	•						•

100% SUBMITTAL

AECOM

AECOM TECHNICAL SERVICES, INC.
3101 WILSON BOULEVARD
SUITE 900
ARLINGTON, VA 22201

T: 703-682-4900 F: 703.682.4901
www.aecom.com

SEAL AREA

BOARD OF ARCHITECTS 10964 EDWARD D. WEAVER STATE OF MARYLAND

KEY PLAN

REV	DATE	DESCRIPTION	S&R BR.	CUSTOMER	PM	SECT. HEAD

	INITIALS	DATE
DRAWN BY	LA/NS	
CHECKED BY	BW/MW	
A-E MANAGER	EW	
ENVIRONMENTAL BRANCH	JH	
SAFETY BRANCH	CS	
CM	MMD	
PM	RWP	
CUSTOMER	JWB	
ENG. BRANCH	DGL	

GENERAL

DRAWING LIST

G-001

FLIGHT PROJECTS BUILDING

NATIONAL AERONAUTICS AND SPACE ADMINISTRATION

GODDARD SPACE FLIGHT CENTER GREENBELT, MARYLAND
FACILITIES MANAGEMENT DIVISION

DATE ISSUED	CoF CODE OR WR#	AECOM PROJECT NO.	SCALE
10/12/2012	12GXAZ	60187636	NTS

FILE DATE: 10/12/2012 10:53:17 AM

VICINITY MAP

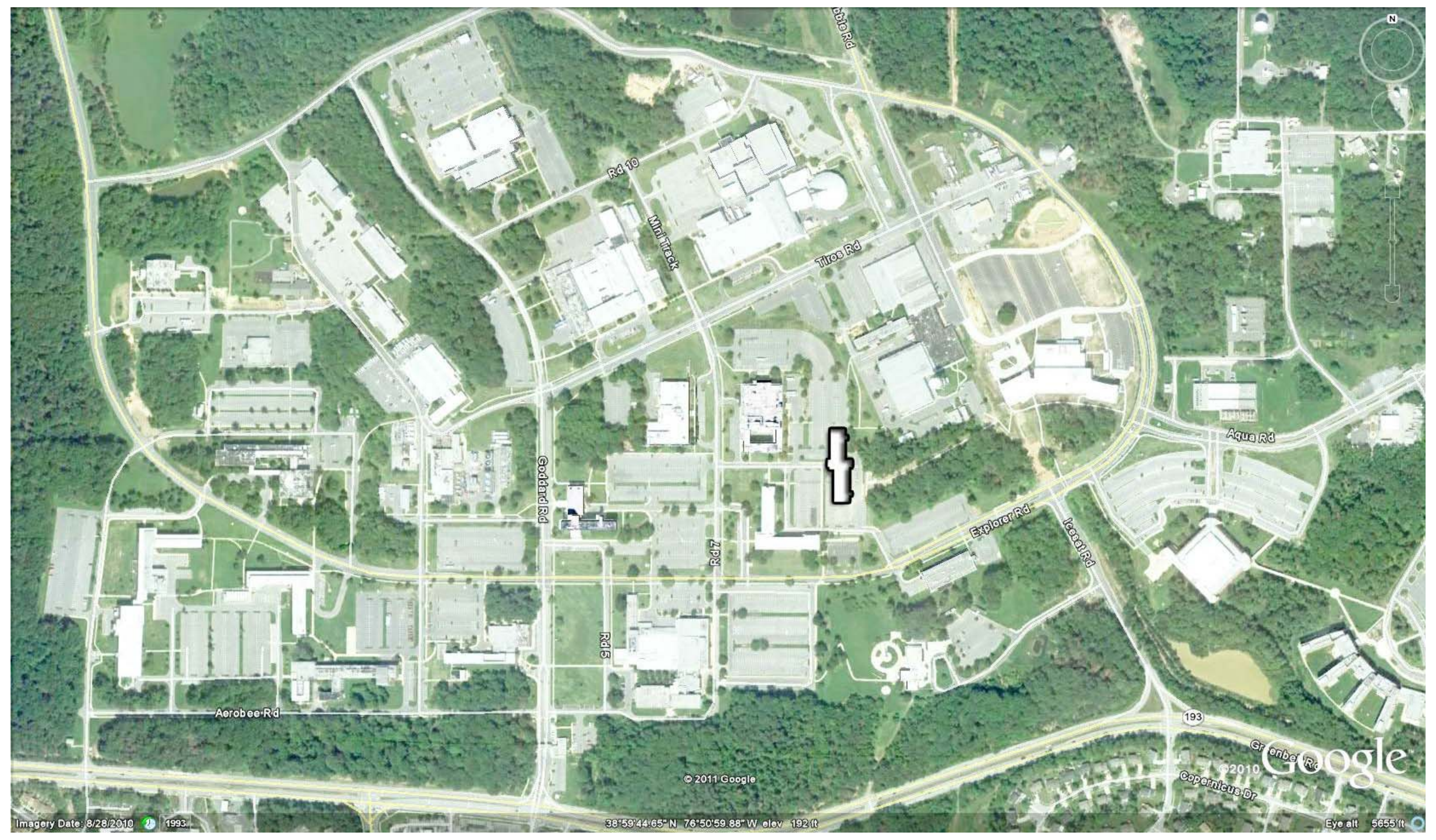

LOCATION MAP

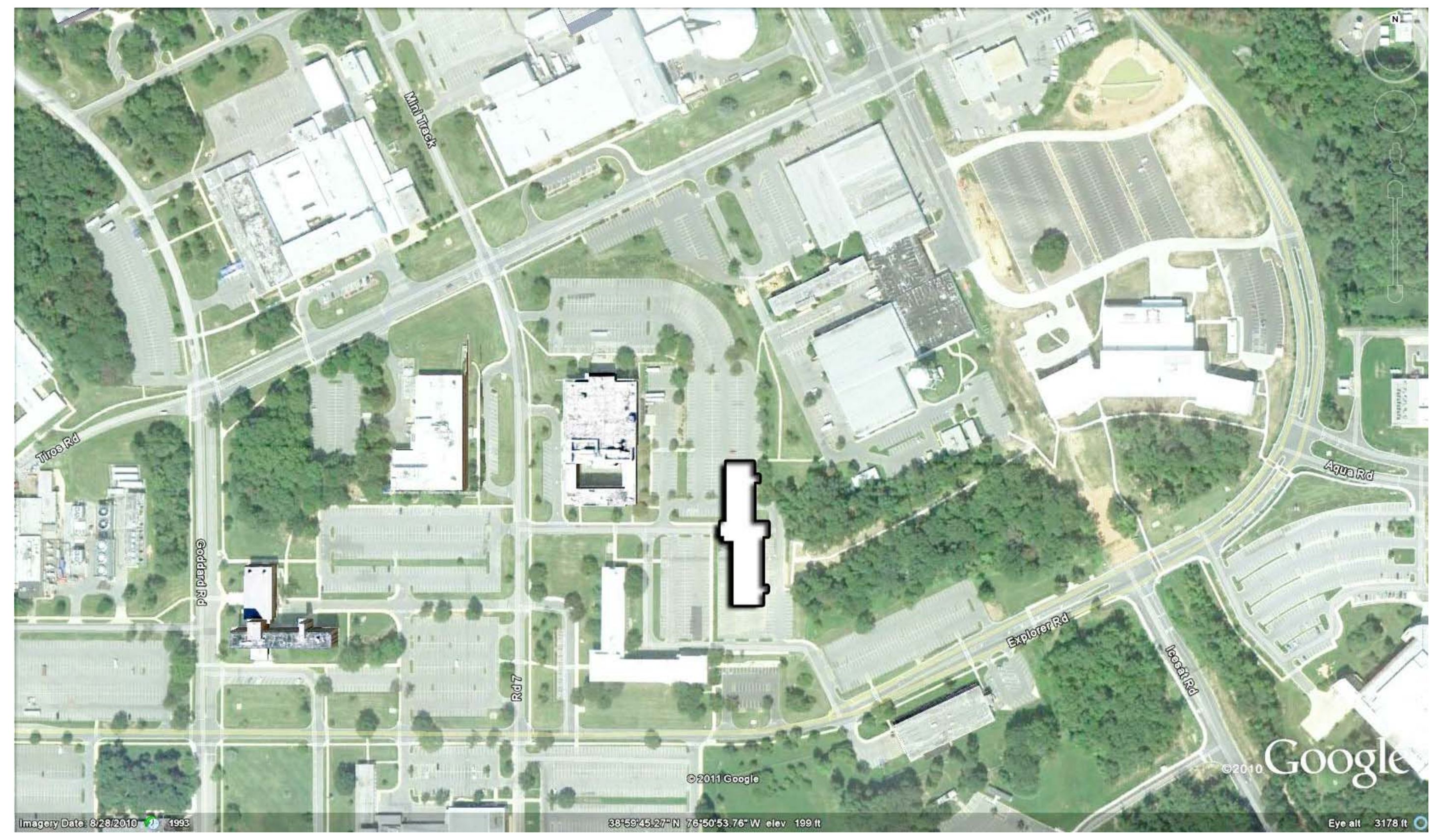

GENERAL NOTES

1. Construction shall comply with NASA standards and regulations.
2. Construction of work indicated on the drawings as (N.I.C.) is not in contract.
3. All work shall be of best practice of each trade.
4. Details not shown are similar in nature to those detailed. Typical details apply at all similar conditions whether cross referenced or not.
5. Dimensions shown on floor plans are to the face of scheduled partitions (fop), face of masonry (fom), face of concrete (foc), center-line of door opening and column grid lines unless noted otherwise.
   Refer to interior elevations and details for additional layers of finish gypsum, board, stone, tile, wood, or other scheduled finish materials.
6. Verify dimensions in field before proceeding with the work. Notify architect of discrepancies, conflicts, and modifications.
7. Do not scale drawings. Where dimensions or exact locations are required and not included on the drawings, request information from architect.
8. Required exit doors, serving more than 50 people, shall open in the direction of exit and shall be operable from inside without the use of a key or special knowledge.
9. All labeled doors and doors in rated walls shall be self closing and have similar labeled frames.
10. Door openings not located by dimension shall be centered in the wall shown or located 2" from finish wall to finish jamb. All door width dimensions on floor plans are for size of door only, and do not include door frame or shim space. Refer to Drawing A-946.
11. Where gypsum board layers differ between two adjoining walls, maintain a continuous finish of wall.
12. Provide independent framing & attachments to structure adequate to support the ceiling system, the light fixtures, air conditioning diffusers, ductwork, sprinkler piping, and bus ducts.
13. All ceiling and light fixtures suspension systems shall be designed and installed to comply with applicable local codes, agencies, and requirement and shall resist a minimum lateral force per code.
14. Electrolytic protection shall be provided between dissimilar metals whenever the two are in contact.
15. Pipe sleeves in mechanical equipment rooms extend 2" above the floor line. Fill the annular spaces of pipe sleeves through the floor or through rated walls with fire safing and smoke seal compound as indicated in the specification.
    Provide approved rated fire dampers for all ducts penetrating fire walls. Manual reset lever for the fire damper shall be accessible and be placed on non-public or lay-in ceiling side of the rated wall.
16. Open exterior joints around window and door frames, between walls and foundations, between walls and roof, between wall panels, at penetrations of utilities through the building envelope shall be sealed,
    flashed or weather-stripped at required for compatibility with adjacent materials to eliminate air leakage & water infiltration.
17. Glazing subject to human impact as identified in applicable codes shall be safety glazing material. Each light of laminated or tempered glazing shall be identified by a permanent label, which specifies the labeler,
    or manufacturer and that safety glazing material has been utilized.
18. Ceiling height dimensions are from designated finished floor surface to finished ceiling surfaces unless noted otherwise. Minimum headroom clearance at stairs shall be 6'-8" to the line of the tread nosing. (measured vertically)
19. Provide concrete housekeeping pads under all mechanical and electrical equipment.
20. Provide proper anchorage of essential equipment in accordance with applicable codes.
21. Provide access panels for mechanical and electrical equipment as required by applicable codes. All access panels shall be concealed and locations shall be submitted to architect for review prior to start of the work.
22. Coordinate and provide all slab and wall openings required by mechanical and electrical systems.
23. All elevator openings shall be certified by the elevator subcontractor prior to forming of structural decks.
24. Mechanical air shaft walls shall be installed to withstand an inward and outward acting pressure of 10 lbs/square foot minimum. Elevator shaft walls shall be installed to withstand an inward and outward acting pressure of 10 lbs/square foot min.
25. Provide acoustical blanket insulation mechanically fastened to wall cavity at all elevator shafts, duct shafts, toilet/restroom walls, mechanical and electrical room walls when next to occupied space.
26. Provide and install all stiffeners, bracings, back-up plates and supporting brackets required for the best possible installation of all toilet/restroom accessories and partitions and all wall mounted or suspended mechanical,
    electrical or miscellaneous equipment.
27. Verify all concrete and masonry openings in the field prior to fabrication of doors and frames.
28. Provide collision barriers adequate to protect all control meters, regulators, and piping for hazardous materials that are exposed to vehicular damage.

Doors

1. All door sizes are jamb opening sizes.
2. All undercut door requirements for varying carpet thickness, rubber flooring etc. Shall be varied and properly coordinated.
3. All new door openings, door frames and hardware shall comply with all applicable codes and U.L. requirements.
4. Coordinate all door and door details to provide adequate clearance and frame reinforcement for hardware types. (Refer to specifications for hardware mounting types.)
5. Typical door bevel to be 1/8" in 2" U.N.O. by the hardware template requirements.
6. Fire rated door assemblies shall bear underwriters laboratory label for rating as required.
7. Hand activated door opening hardware shall be centered at 38" above the finished floor.
8. Door hardware shall be operable without special effort or requiring the ability to grasp the hardware.
9. All floor pivots and closer plates are to be installed flush to slab below flooring. Provide adjustment access as required.
10. All steel doors & frames to be painted unless noted otherwise.

Fire protection

1. All penetrations of floor assemblies, regardless of the fire rating of the floor assemblies, shall be fire-stopped with listed fire stop penetration seals listed for use in floor assemblies with 2 hour fire ratings.
   Fill the top 2" of the sleeve with smoke seal sealant complying with UL test assembly r-113270l.
2. Door openings into required 1-hour fire resistive corridors shall be protected with a smoke and draft fire assembly having a 20-minute rating.
3. All interior finishes shall comply with the requirements of applicable codes.
4. Any decorations used shall be non-combustible or flameproofed in an approved manner.
5. Fire dampers used or doors shall be provided where air ducts penetrate fire rated walls and ceilings prior to installation verify that adequate access is available in order to reset fusible links.
6. Provide a portable fire extinguisher only in non-office areas per NASA-STD 8719.11A.
7. Provide a permanent portable fire extinguisher with a surface mounted cabinet 4'-0" AFF within 75 feet from any point in all machine and equipment rooms.
8. Corridors shall be so arranged that it is possible to go in either direction from any point in corridor to a separate exit except for dead end corridors not exceeding 20' in length.
9. Exit doors to be openable from inside without use of a key or any special knowledge or effort
10. Exit signs shall be internally or externally illuminated by LEDs.
11. All exits shall be provided with illuminated exit signs.
12. Provide two separate sources of power for exit signs.
13. The installation of automatic fire sprinkler systems shall comply with applicable codes.
14. Fire damper assemblies including sleeves and installation procedures shall be approved by the building inspector prior to installation.
15. All spacers, fillers, blocking, etc. shall be fire treated.
16. Aisles leading to required exits shall have a minimum width of 44" and a walkway with a minimum width of 44" shall be maintained continuously to a public way.
17. All pipes ducts, buss ducts, and conduits that penetrate floor slabs and/or rated walls shall be installed in a manner that will preserve the fire resistive and structural integrity of the building.
18. Provide one hour rated wall construction for elevator lobbies, electrical and telephone rooms unless noted otherwise.
19. Not Used
20. Exit signs shall be in accordance with applicable codes.
21. Emergency lighting shall be in accordance with applicable codes.
22. Fire separations and construction requirement shall be in accordance with applicable codes.
23. Roof covering shall be class b fire retardant for roofs with standing seam metal roof and in accordance with applicable codes.
24. Fire dampers or doors shall be provided where air ducts penetrate fire rated walls or ceiling in accordance with applicable codes.
25. Provide 2 hour intumescent paint on columns and 2 hour spray on fire proofing for all remaining structural support pertaining to Stair 1 and Stair 2 and support for mechanical shafts and non self-supporting rooms(elevator machine room).
    Refer to drawing LS-001 for support fire ratings for central communicating space. Exposed structure from the interior face of gypsum board within the stair does not require fire proofing.
    For the 2 hour fire rated columns indicated in the structural drawings, provide a fire rated assembly to meet UL 263 Design No. X629.
    For the 2 hour fire rated beams and structural support indicated in the structural drawings, provide a fire rated assembly to meet UL 263 Design No. N827.
    For the 2 hour fire rated HSS beams indicated in the structural drawings, provide a fire rated horizontal shaftwall assemblies per WHI 694-0300.1.
    - The fire protection for HSS beams pertaining to Stair 1 and Stair 2 should be stopped at the face of the 2-hour fire rated wall assembly.

ARCHITECTURAL ABBREVIATIONS

AB	- ANCHOR BOLT
AC	- AIR CONDITIONING
ACC	- ACCESSIBLE
ACOUS	- ACOUSTICAL
AD	- AREA DRAIN
ADD	- ADDITIONAL
ADJ	- ADJUSTABLE
AESS	- ARCHITECTURAL EXPOSED STRUCTURAL STEEL
AFF	- ABOVE FINISH FLOOR
AGGR	- AGGREGATE
ALT	- ALTERNATE
ALUM	- ALUMINUM
ANCH	- ANCHOR
ANNO	- ANODIZED
APC	- ACOUSTICAL PANEL CEILING
APPD	- APPROVED
APPROX	- APPROXIMATE
ARCH	- ARCHITECTURAL
ATC	- ACOUTSTICAL TILE CEILING
AUTO	- AUTOMATIC
AV	- AUDIO VISUAL
BEJ	- BRICK EXPANSION JOINT
BD	- BOARD
BLDG	- BUILDING
BLK	- BLOCK
BM	- BEAM
BOT	- BOTTOM
BRK	- BRICK
BSMT	- BASEMENT
BT	- BOLT
BUR	- BUILT-UP ROOFING
CAB	- CABINET
CAT	- CATEGORY
CB	- CATCH BASIN
CBD	- CHALK BOARD
CBU	- CEMENTITIOUS BACKER UNIT
CEM	- CEMENT
CER	- CERAMIC
CG	- CORNER GUARD
CH	- CHILLER
CHAN	- CHANNEL
CI	- CAST IRON
CIP	- CAST-IN-PLACE
CJ	- CONTROL JOINT / CONSTRUCTION JOINT
CL	- CENTER LINE
CLG	- CEILING
CLR	- CLEAR
CMU	- CONCRETE MASONRY UNIT
CNTR	- COUNTER
CO	- CLEANOUT
COL	- COLUMN
COMPART	- COMPARTMENT
CONC	- CONCRETE
COND	- CONDITION
CONN	- CONNECTION
CONT	- CONTINUOUS
CONTR	- CONTRACTOR
COORD	- COORDINATE
CORR	- CORRIDOR
CT	- CERAMIC TILE / COOLING TOWER
CTR	- CENTER
CTSK	- COUNTER SUNK
CW	- COLD WATER (PIPING)
D	- DEEP, DEPTH
DA	- DISABLED
DBL	- DOUBLE
DEG	- DEGREE
DEMO	- DEMOLITION
DEPT	- DEPARTMENT
DET	- DETAIL
DF	- DRINKING FOUNTAIN
DIA	- DIAMETER
DIFF	- DIFFUSER
DIM	- DIMENSION
DIS	- DISABLED
DISP	- DISPENSER
DMPF	- DAMPPROOFING
DMT	- DEMOUNTABLE
DN	- DOWN
DO	- DOOR OPENING
DP	- DIMENSION POINT
DPTN	- DEMOUNTABLE PARTITION
DR	- DOOR
DRN	- DRAIN
DS	- DOWNSPOUT
DW	- DISHWASHER
DWG	- DRAWING
DWR	- DRAWER
(E)	- EXISTING
E	- EAST
EA	- EACH
EB	- EXPANSION BOLT
EIFS	- EXTERIOR INSULATION AND FINISH SYSTEM
EFS	- EXTERIOR FINISH SYSTEM
EJ	- EXPANSION JOINT
EL	- ELEVATION
ELEC	- ELECTRICAL
ELEV	- ELEVATOR
EMERG	- EMERGENCY
ENCLO	- ENCLOSURE
EP	- ELECTRICAL PANELBOARD
EQ	- EQUAL
EQUIP	- EQUIPMENT
ESCAL	- ESCALATOR
EWC	- ELECTRICAL WATER COOLER
EXH	- EXHAUST
EXP	- EXPANSION
EXIST	- EXISTING
EXT	- EXTERIOR
FA	- FIRE ALARM
FB	- FACE BRICK
FC	- FACE
FD	- FLOOR DRAIN
FDC	- FIRE DEPARTMENT CONNECTION
FND	- FOUNDATION
FE	- FIRE EXTINGUISHER
FEC	- FIRE EXTINGUISHER CABINET
FF&E	- FURNITURE, FINISHES & EQUIPMENT
FFEL	- FINISH FLOOR ELEVATION
FH	- FLAT HEAD
FHC	- FIRE HOSE CABINET
FIN	- FINISH
FIXT	- FIXTURE
FL	- FLOOR
FLASH	- FLASHING
FLUOR	- FLUORESCENT
FO	- FACE OF
FP	- FIRE PROTECTION
FPG	- FIREPROOFING
FR	- FRAME

FT	- FEET
FRTW	- FIRE RETARDANT TREATED WOOD
FTG	- FOOTING
FURN	- FURNITURE
FURR	- FURRING
FWC	- FABRIC WALLCOVERING
FWP	- FABRIC WRAPPED PANEL
G	- GROUND
GA	- GAUGE / GAGE
GALV	- GALVANIZED
GB	- GRAB BAR
GC	- GENERAL CONTRACT(OR)
GRC	- GLASS FIBER REINFORCED CONCRETE
GRG	- GLASS FIBER REINFORCED GYPSUM
GL	- GLASS
GR	- GRADE
GRD	- GROUND
GYPBD	- GYPSUM WALLBOARD
H	- HIGH / HEIGHT
HB	- HOSE BIB
HC	- HOLLOW CORE
HCP	- HANDICAPPED
HDW	- HARDWARE
HDWD	- HARDWOOD
HS	- HEAT STRENGTHEND (GLASS)
HM	- HOLLOW METAL (STEEL FRAME)
HNDRL	- HANDRAIL
HO	- HOLD-OPEN
HORIZ	- HORIZONTAL
HPT	- HIGH POINT
HRC	- HOSE REEL CABINET
HR	- HOUR
HT	- HEIGHT
HVAC	- HEATING, VENTILATION, AIR CONDITIONING
HW	- HOT WATER
HYDR	- HYDRAULIC
ID	- INSIDE DIAMETER
IN	- INCH
INCAND	- INCANDESCENT
INCL	- INCLUDED / INCLUDING
INFO	- INFORMATION
INSUL	- INSULATION
INT	- INTERIOR
INTERM	- INTERMEDIATE
INV	- INVERT
IPS	- INTERNATIONAL PIPE STANDARD
IRMA	- INVERTED ROOF MEMBRANE ASSEMBLY
JAN	- JANITOR
JC	- JANITOR'S CLOSET
JST	- JOIST
JT	- JOINT
K	- KIP (1000 LBF)
KPL	- KICK PLATE
KG	- KILOGRAM
KIT	- KITCHEN
KO	- KNOCKOUT
L	- LONG OR LITER (METRIC DOCS)
LAB	- LABORATORY
LDG	- LANDING
LAM	- LAMINATE / LAMINATION
LAV	- LAVATORY
LB	- POUND
LF	- LINEAR FOOT
LKR	- LOCKER
LLH	- LONG LEG HORIZONTAL
LLV	- LONG LEG VERTICAL
LN	- LINE
LT	- LIGHT
LPT	- LOW POINT
M	- METER
MACH	- MACHINE
MAINT	- MAINTENANCE
MAS	- MASONRY
MATL	- MATERIAL
MAX	- MAXIMUM
MB	- MACHINE BOLT
MBL	- MARBLE
MDF	- MEDIUM DENSITY FIBERBOARD
MEP	- MECHANICAL, ELECTRICAL, PLUMBING
MDO	- MEDIUM DENSITY OVERLAY PLYWOOD
MECH	- MECHANICAL
MEMB	- MEMBRANE
MET	- METAL
MEZZ	- MEZZANINE
MFR	- MANUFACTURER
MH	- MANHOLE
MIN	- MINIMUM
MISC	- MISCELLANEOUS
MM	- MILLIMETER
MO	- MASONRY OPENING
MS	- MACHINE SCREW
MTD	- MOUNTED
MTG	- MOUNTING
MTL	- METAL
MULL	- MULLION
N	- NORTH
NA	- NOT APPLICABLE
NC	- NOISE CRITERIA
NIC	- NOT IN CONTRACT
NO	- NUMBER
NOM	- NOMINAL
NTS	- NOT TO SCALE
OA	- OUTSIDE AIR
OC	- ON CENTER
OCEW	- ON CENTER EACH WAY
OD	- OUTSIDE DIAMETER/DIMENSION
OFCI	- OWNER FURNISHED, CONTR INSTALLED
OFOI	- OWNER FURNISHED, OWNER INSTALLED
OFF	- OFFICE\
OH	- OVER HEAD
OPH	- OPPOSITE HAND
OPNG	- OPENING
OPP	- OPPOSITE
OPPHD	- OPPOSITE HAND
ORD	- OVERFLOW ROOF DRAIN
OUTS	- OUTSIDE
OVHD	- OVERHEAD
P	- PAINT
PAV	- PAVING
PARTN	- PARTITION
PATD	- PAPER TOWEL DISPENSER
PBD	- PARTICLEBOARD
PC	- PRECAST CONCRETE
PDF	- POWER DRIVEN FASTENER
PERF	- PERFORATED
PERIM	- PERIMETER
PERP	- PERPENDICULAR
PF	- POINT OF INTERSECTION
PL	- PLATE
PLAM	- PLASTIC LAMINATE

PLAS	- PLASTER
PLBG	- PLUMBING
PLF	- POUNDS PER LINEAR FOOT
PLYWD	- PLYWOOD
PNL	- PANEL
POL	- POLISHED
PR	- PAIR
PREFAB	- PREFABRICATED
PRE FN	- PRE FINISHED
PROJ	- PROJECT
PSF	- POUNDS PER SQUARE FOOT
PT	- POINT
PTD	- PAINTED
PTN	- PARTITION
PTR	- PAPER TOWEL RECEPTACLE
Q	- QUARRY TILE
QTY	- QUANTITY
(R)	- RELOCATED
R	- RADIUS OR RISER (PIPING)
RA	- RETURN AIR
RAD	- RADIUS
RB	- RESILIENT BASE
RCP	- REFLECTED CEILING PLAN
RD	- ROOF DRAIN
RECOM	- RECOMMENDED
RECPT	- RECEPTACLE
REC	- RECESSED
REF	- REFERENCE
REFL	- REFLECTED / REFLECTIVE / REFLECT
REFR	- REFRIGERATOR
REG	- REGISTER
REINF	- REINFORCED / REINFORCING
REL	- RELOCATE
REM	- REMOVABLE
REQ	- REQUIRE / REQUIRED
RESIL	- RESILIENT
REV	- REVISION / REVISED
RM	- ROOM
RO	- ROUGH OPENING
RTD	- RATED
RTG	- RATING
RWL	- RAIN WATER LEADER
S	- SOUTH
SA	- SUPPLY AIR
SAN	- SANITARY
SC	- SOLID CORE
SCHED	- SCHEDULE
SD	- STORM DRAIN / SOAP DISPENSER
SECT	- SECTION
STS	- SELF TAP METAL SCREW
SF	- SQUARE FEET/FOOT
SH	- SPRINKLER HEAD
SHT	- SHEET
SHR	- SHOWER
SIM	- SIMILAR
SM	- SHEET METAL
SND	- SANITARY NAPKIN DISPENSER
SP	- STANDPIPE
SPEC	- SPECIFICATION
SPR	- SPRINKLER
SPKR	- SPEAKER
SQ	- SQUARE
SSE	- STRUCTURE SLAB ELEVATION
SST	- STAINLESS STEEL
SSK	- SERVICE SINK
STA	- STATION
STD	- STANDARD
STL	- STEEL
STLJST	- STEEL JOIST
STOR	- STORAGE
STRG	- STRINGER
STRL	- STRUCTURAL
STRUC	- STRUCTURAL
SUBCAT	- SUBCATEGORY
SUSP	- SUSPENDED
SYMM	- SYMMETRICAL
SYS	- SYSTEM
T&G	- TONGUE AND GROOVE
T	- TREAD / THERMOSTAT
TB	- TOWEL BAR
TC	- TOP OF CURB
TCONC	- TOP OF CONCRETE
TEL	- TELEPHONE OR TELECOM
TEMP	- TEMPERATURE
TER	- TERRAZZO
TGB	- TOGGLE BOLT
THK	- THICKNESS
THRES	- THRESHOLD
THRU	- THROUGH
TKBD	- TACKBOARD
TMPD	- TEMPERED
TO	- TOP OF (SEE OTHER WORD)
TOS	- TOP OF SLAB, TOP OF STRUCTURE
TOSTL	- TOP OF STEEL
TP	- TOP OF PAVEMENT
TPD	- TOILET PAPER DISPENSER
TRACT	- TRACTION
TV	- TELEVISION
TW	- TOP OF WALL
TYP	- TYPICAL
UNFIN	- UNFINISHED
UON	- UNLESS OTHERWISE NOTED
UR	- URINAL
VAC	- VENTILATION AND AIR CONDITIONING
VCT	- VINYL COMPOSITION TILE
VERT	- VERTICAL
VEST	- VESTIBULE
VIF	- VERIFY IN FIELD
VR	- VAPOR RETARDER
VT	- VINYL TILE
VWC	- VINYL WALL COVERING
W/	- WITH
W	- WIDE, WIDTH/WEST
WC	- WATER CLOSET
WD	- WOOD
WDS	- WOOD SCREW
WDW	- WINDOW
W/O	- WITHOUT
WP	- WATERPROOFING
WPM	- WATERPROOF MEMBRANE
WPT	- WORK POINT
WR	- WATER RESISTENT/REPELLANT
WS	- WEATHERSTRIPPING
WSCT	- WAINSCOT
WT	- WEIGHT
WW	- WALL TO WALL

ARCHITECTURAL SYMBOLS

SECTION NUMBER — DIRECTION OF VIEW — 1 / A-101 — SHEET NUMBER WHERE SECTION IS DRAWN

SECTION INDICATOR

DETAIL NUMBER — 1 / A-101 — SHEET NUMBER WHERE DETAIL IS DRAWN — AREA REQUIRING DETAIL

PLAN DETAIL INDICATOR

LEVEL EL. — **ELEVATION TARGET**

NORTH ARROW

W1 — **WINDOW TAG**

L1 — **LOUVER TAG**

PARTITION TAG

101 — **DOOR TAG**

ROOM NAME / N101 — **ROOM TAG**

ALIGN

ELEVATION NUMBER — 1 — DIRECTION OF VIEW — A-101 — SHEET NUMBER WHERE ELEVATION IS DRAWN

EXTERIOR ELEVATION INDICATOR

ELEVATION NUMBER — 1, 2, 3 — DIRECTION OF VIEW — A-101 — SHEET NUMBER WHERE ELEVATION IS DRAWN

INTERIOR ELEVATION INDICATOR

DETAIL NUMBER — TITLE OF DRAWING

1 DETAIL
A-101 REF. A-101 SCALE: 1/8" = 1'-0"

SHEET NUMBER WHERE DRAWN — SHEET NUMBER WHERE DRAWING IS REFERENCED — DWG SCALE

TITLE INDICATOR

SECTION SYMBOLS

EARTH	GREEN ROOF
GRAVEL / CRUSED STONE	ACOUSTICAL MATERIAL
CONCRETE	CARPET
SAND / GROUT	ROUGH CARPENTRY
CONCRETE MASONRY UNITS	WOOD OR METAL SHIM OR SPACER
STEEL	GLASS
ALUMINUM	GYPSUM BOARD
FINISHED WOOD	BLANKET INSULATION
PLYWOOD	RIGID INSULATION

100% SUBMITTAL

AECOM

AECOM TECHNICAL SERVICES, INC.
3101 WILSON BOULEVARD
SUITE 900
ARLINGTON, VA 22201

T: 703-682-4900 F: 703.682.4901
www.aecom.com

SEAL AREA

BOARD OF ARCHITECTS 10964 EDWARD D. WEAVER STATE OF MARYLAND

KEY PLAN

REV	DATE	DESCRIPTION	S&R BR.	CUSTOMER	PM	SECT. HEAD

	INITIALS	DATE
DRAWN BY	LA/NS	
CHECKED BY	BW/MW	
A-E MANAGER	EW	
ENVIRONMENTAL BRANCH	JH	
SAFETY BRANCH	CS	
CM	MMD	
PM	RWP	
CUSTOMER	JWB	
ENG. BRANCH	DGL	

GENERAL

GENERAL INFORMATION

G-002

FLIGHT PROJECTS BUILDING

NATIONAL AERONAUTICS AND SPACE ADMINISTRATION

GODDARD SPACE FLIGHT CENTER GREENBELT, MARYLAND
FACILITIES MANAGEMENT DIVISION

DATE ISSUED	CoF CODE OR WR#	AECOM PROJECT NO.	SCALE
10/12/2012	12GXAZ	60187636	As indicated

FILE DATE: 10/11/2012 5:48:22 PM

APPLICABLE CODES:

STANDARD REFERENCE DOCUMENT FOR FACILITIES, JULY, 2010
INTERNATIONAL BUILDING CODE (IBC), 2009
NASA STD 8719.11A, SAFETY STANDARD FOR FIRE PROTECTION, NOVEMBER, 2008
NFPA 1, FIRE PREVENTION CODE, 2009
NFPA 10 STANDARD FOR PORTABLE FIRE EXTINGUISHERS, 2010
NFPA 13, INSTALLATION OF SPRINKLER SYSTEMS, 2010
NFPA 14, STANDARD FOR THE INSTALLATION OF STANDPIPE, PRIVATE HYDRANTS AND HOSE SYSTEMS, 2010
NFPA 20, STANDARD FOR THE INSTALLATION OF STATIONARY FIRE PUMPS FOR FIRE PROTECTION, 2010
NFPA 24, INSTALLATION OF PRIVATE FIRE SERVICE MAINS AND THEIR APPURTENANCES, 2010
NFPA 70, NATIONAL ELECTRICAL CODE, 2011
NFPA 72, NATIONAL FIRE ALARM CODE, 2010
NFPA 80, STANDARD FOR FIRE DOORS, FIRE WINDOWS, 2010
NFPA 90A, STANDARD FOR THE INSTALLATION OF AIR CONDITIONING AND VENTILATING SYSTEMS, 2009
NFPA 101, LIFE SAFETY CODE, 2009
NFPA 170, FIRE SAFETY AND EMERGENCY SYMBOLS, 2009
NFPA 1901, AUTOMOTIVE FIRE APPARATUS, 2009

1. OCCUPANCY CLASSIFICATION:

LEVELS 1-4	B (BUSINESS)	NFPA 101 6.1.11
LEVELS 1-4	A-3 (ASSEMBLY)	NFPA 101 6.1.2
PENTHOUSE	F-2(MECH. EQUIPMENT)	NFPA 101 6.1.1.2

BUILDING IS NON-SEPARATED MIXED USE PER NFPA 101 SECTION 6.1.14.1.2. MEANS OF EGRESS REQUIREMENTS ARE BASED ON THE MOST RESTRICTIVE OCCUPANCY THROUGHOUT LEVELS 1 THROUGH 4, PER NFPA 101 SECTION 6.1.14.3.2. CONSTRUCTION REQUIREMENTS ARE BASED ON IBC REQUIREMENTS. FIRE PROTECTION REQUIREMENTS ARE BASED ON NASA STD 8719.11A

2. ALLOWABLE AREAS, HEIGHT LIMITATIONS AND FIRE DEPARTMENT ACCESS REQUIREMENTS:

ALLOWABLE FLOOR AREAS, HEIGHT LIMITATION, AND FIRE DEPARTMENT ACCESS REQUIREMENTS

OCCUPANCY	CONSTRUCTION TYPE	TABULAR ALLOWABLE AREA, IBC 503	TABULAR ALLOWABLE HEIGHT, IBC 503	SPRINKLER CREDIT	SPRINKLER AND OPEN FRONTAGE CREDIT	ADJUSTED ALLOWABLE AREA PER STORY	ADJUSTED ALLOWABLE HEIGHT	PLANNED FLOOR AREA (MAX.)	PLANNED BUILDING HEIGHT
BUSINESS	TYPE IIB	23,000 SQ FT	3 ST, 55 FT	1 ST, 20 FT	1+2.0+0.75=375%	86,250 SQ FT	4 ST, 75, FT	30.239 SQ FT	4 ST, 64 FT
ASSEMBLY	TYPE IIB	9,500 SQ FT	2 ST, 55 FT	1 ST, 20 FT	1+2.0+0.75=375%	35,625 SQ FT	3 ST, 75 FT	30,239 SQ FT	LIMITED TO FLOORS 1-3

BUILDING AREA

FLOOR LEVEL	AREA	
FIRST FLOOR LEVEL	28,969 SF	
SECOND FLOOR LEVEL	30,239 SF	
THIRD FLOOR LEVEL	27,805 SF	
FORTH FLOOR LEVEL	27,855 SF	
PENTHOUSE FLOOR LEVEL	5,881 SF	
ALLOWABLE BUILDING AREA: (CONSTRUCTION TYPE IIB) -	86,250 SF PER FLOOR (FULLY SPRINKLERED AND 75% EXCESS OPEN FRONTAGE)	IBC TABLE 503, IBC 506.2

BUILDING HEIGHT

ALLOWABLE HEIGHT CONSTRUCTION TYPE IIB	4 STORIES (FULLY SPRINKLERED), 75 FT	IBC TABLE 503, IBC 504.3
ACTUAL BUILDING HEIGHT	64 FT(PENTHOUSE HT NOT APPLICABLE)	IBC SEC 502
ALLOWABLE PENTHOUSE HEIGHT	18 FT	IBC 1509.2.1
ACTUAL PENTHOUSE HEIGHT	18 FT	
ALLOWABLE PENTHOUSE HEIGHT AT ELEVATORS	28 FT	IBC 1509.2.1
ACTUAL PENTHOUSE HEIGHT AT ELEVATORS	20 FT	

FLOOR ELEVATIONS

FLOOR LEVEL	FLOOR ELEVATION	
FIRST FLOOR LEVEL	0'-0"	
SECOND FLOOR LEVEL	16'-0"	
THIRD FLOOR LEVEL	32'-0"	
FORTH FLOOR LEVEL	48'-0"	
PENTHOUSE FLOOR LEVEL	64'-0"	
HIGH RISE BUILDING	NO	IBC 403

DEAD ENDS FOR FIRE TRUCKS LIMITED TO 150 FT – PARKING LOTS HAVE BEEN DESIGNED FOR THIS REQUIREMENT UNLESS NOTED OTHERWISE.
FIRE TRUCK ACCESS HAS BEEN DESIGNED PER THE AUTO-TURN ANALYSIS PROGRAM. PUMPER TRUCKS ARE PROVIDED ACCESS BASED ON THE PROGRAM FROM EITHER DRIVE ENTRANCE. LADDER TRUCKS CAN ACCESS THE SITE FROM THE SOUTHEAST DRIVE. THE PROGRAM SHOWS THAT THESE TRUCKS DO NOT NEED TO RUN OVER CURBS TO ACCESS THE SITE.

3. EXTERIOR OPENING PROTECTION, FIRE RESISTANCE RATINGS:

CONSTRUCTION TYPE — TYPE IIB AUTOMATIC FULLY SPRINKLERED — IBC TABLE 601

BUILDING ELEMENT	REQUIRED	PROVIDED	CODE REFERENCE
STRUCTURAL FRAME	0	0	IBC TABLE 601
BEARING WALLS (INTERIOR & EXTERIOR)	0	0	
NON LOAD BEARING WALLS & PARTITIONS EXTERIOR 10 ≤ X < 30	0	0	IBC TABLE 602
NON LOAD BEARING WALLS AND PARTITIONS INTERIOR	0	VARIES	IBC TABLE 601
FLOOR CONSTRUCTION*	0	0	
ROOF CONSTRUCTION*	0	0	
* INCLUDING SUPPORTING BEAMS AND JOISTS			
EXTERIOR WALL RATING	0	0	IBC TABLE 602
OPENINGS (UNPROTECTED)	UNLIMITED		IBC TABLE 704.8
SHAFT ENCLOSURE RATING			
ENCLOSURE ≥ 4 STORIES	2	2	IBC 708.4

4. UNENCLOSED STAIR PROTECTION REQUIREMENTS:

THE CENTRAL OPEN STAIR HAS BEEN PROTECTED AS A COMMUNICATING SPACE, IN ACCORDANCE WITH NFPA 101 SECTION 8.6.6, AND AS NOTED HEREIN. AS REQUIRED BY NFPA 101 SECTION 8.6.6, THE FOLLOWING APPLY:

THE COMMUNICATING SPACE DOES NOT CONNECT MORE THAN THREE (3) CONTIGUOUS STORIES. IT HAS BEEN AGREED WITH NASA GODDARD FIRE PROTECTION TO PROVIDE AN ENCLOSURE ABOVE THE 4TH STORY AREA ABOVE THE OPEN STAIR. IT IS PLANNED TO PROVIDE ONE HOUR RATED ASSEMBLIES TO PROVIDE HORIZONTAL SEPARATION AT THE 4TH LEVEL. SUPPORTING STRUCTURE BENEATH THESE ASSEMBLIES WAS AGREED TO BE LEFT UNRATED, CONSISTENT WITH UNRATED SEPARATION REQUIREMENTS FROM ITEM (4) BELOW, AND CONSISTENT WITH THE TYPE II CONSTRUCTION (IF A FLOOR SLAB EXISTED AT 4TH FLOOR IT WOULD BE UNRATED).

THE LOWEST OR NEXT TO LOWEST FLOOR OF THE COMMUNICATING SPACE IS A STREET FLOOR – PROVIDED.

THE ENTIRE FLOOR AREA OF THE COMMUNICATING SPACE IS OPEN AND UNOBSTRUCTED, SUCH THAT A FIRE IN ANY PART OF THE SPACE WILL BE READILY OBVIOUS TO THE OCCUPANTS OF THE SPACE PRIOR TO THE TIME IT BECOMES AN OCCUPANT HAZARD. IT HAS BEEN AGREED WITH NASA GODDARD FIRE PROTECTION THAT THE PROVISION OF FULL SPRINKLER PROTECTION WITH QUICK RESPONSE SPRINKLERS, PLUS THE ELEVATOR LOBBY AND SMOKE DOOR SMOKE DETECTORS PROVIDE EARLY WARNING TO OCCUPANTS THROUGHOUT THE SPACE (AND THE BUILDING ON A GENERAL ALARM).

THE COMMUNICATING SPACE IS SEPARATED FROM THE REMAINDER OF THE BUILDING BY A SMOKE BARRIER (UNRATED) FOR THIS SPRINKLED BUILDING. SMOKE BARRIERS (UNRATED) HAVE BEEN PROVIDED AT THE JUNCTURES OF BOTH BUILDING WINGS AND THE CENTRAL LOBBY ON LEVELS ONE THROUGH THREE.

THE COMMUNICATING SPACE HAS LOW HAZARD CONTENTS PROTECTED BY A SPRINKLER SYSTEM. OCCUPANCIES CONSIST OF MECHANICAL, ELECTRICAL AND PUMP ROOMS (ORDINARY HAZARD) AND LIGHT HAZARD LOBBIES, AND ASSEMBLY SPACES.

EGRESS CAPACITY IS SUFFICIENT TO ALLOW ALL OCCUPANTS OF ALL LEVELS WITHIN THE COMMUNICATING SPACE TO SIMULTANEOUSLY EGRESS THE COMMUNICATING SPACE BY CONSIDERING IT AS A SINGLE FLOOR AREA IN DETERMINING THE REQUIRED EGRESS CAPACITY. THE TOTAL OCCUPANT LOAD ON LEVELS 1 THROUGH 3 IN THE COMMUNICATING SPACE IS 398 PERSONS. THE TOTAL EXIT CAPACITIES AT LEVELS 1 AND 2 OF THE COMMUNICATING SPACE IS 670 PERSONS. THE TOTAL NUMBER OF PERSONS USING THE MONUMENTAL STAIR TO EGRESS FROM LEVEL 3 TO LEVEL 1 IS 66 PERSONS, AND THE CAPACITY OF THIS STAIR IS 220 PERSONS. PERSONS ON LEVEL 1 AND 2 CAN EXIT THE COMMUNICATING SPACE AT GRADE.

EACH OCCUPANT WITHIN THE COMMUNICATING SPACE HAS ACCESS TO NOT LESS THAN ONE EXIT WITHOUT HAVING TO TRAVERSE ANOTHER STORY WITHIN THE COMMUNICATING SPACE. EXITS ARE PROVIDED IN BOTH WINGS ON EACH LEVEL, AND THESE EXITS ARE NOT LOCATED WITHIN THE COMMUNICATING SPACE. BASED ON THE 2009 NFPA 101 COMMENTARY INTERPRETATION, THE USE OF THE OPEN STAIR BY PERSONS LOCATED WITHIN THE COMMUNICATING SPACE FOR EXIT ACCESS IS ALLOWED FROM LEVEL 3, FOR THOSE PERSONS LOCATED WITHIN ALLOWABLE TRAVEL DISTANCE FROM LEVEL 3.

EACH OCCUPANT NOT IN THE COMMUNICATING SPACE HAS ACCESS TO NOT LESS THAN ONE EXIT WITHOUT HAVING TO ENTER THE COMMUNICATING SPACE. PERSONS LOCATED OUTSIDE OF THE CENTRAL LOBBY AREA HAVE ACCESS TO A STAIR IN EACH WING, ON EACH LEVEL.

5. PLANNED SPRINKLER AND STANDPIPE SYSTEMS:

A MANUAL CLASS 1 STANDPIPE SYSTEM IS TO BE PROVIDED AS PERMITTED BY NFPA 14 FOR A NON-HIGH RISE BUILDING (SECTION 5.4.1.1).
HOSE CONNECTIONS WILL BE LOCATED WITHIN ENCLOSED EXIT STAIRS, AND ON FLOORS AS NECESSARY TO COMPLY WITH NFPA 14 TRAVEL DISTANCE REQUIREMENTS TO HOSE VALVES.
A FIRE DEPARTMENT CONNECTION WILL BE PROVIDED IN A FIRE DEPARTMENT APPROVED LOCATION TO SUPPLY THE STANDPIPE SYSTEM.
THE STANDPIPE SYSTEM WILL BE DESIGNED TO PROVIDE 100 PSI AT THE TOP HOSE CONNECTIONS, SUPPLIED BY THE FIRE DEPARTMENT PUMPER TRUCK THROUGH 3 WAY FIRE DEPARTMENT CONNECTIONS (SECTION 7.8.1).
STANDPIPE SYSTEM WILL ALSO SUPPLY SPRINKLER PROTECTION FOR ALL FLOORS IN A COMBINED SYSTEM, WITH FLOOR CONTROL ASSEMBLIES FOR SPRINKLER FEEDS LOCATED WITHIN STAIR ENCLOSURES ON EACH LEVEL.
SPRINKLER PROTECTION WILL BE DESIGNED BASED ON ORDINARY HAZARD 1 REQUIREMENTS USING QUICK RESPONSE SPRINKLERS FOR ALL OFFICE AREAS, AND ORDINARY HAZARD 2 REQUIREMENTS FOR THE PENTHOUSE AREA.
NO DEVIATIONS FROM A FULLY SPRINKLERED BUILDING ARE ANTICIPATED.
A POST INDICATING VALVE IS TO BE PROVIDED FOR THE INCOMING FIRE WATER SERVICE LINE.
A BACKFLOW PREVENTER IS PLANNED AS CALLED FOR.

6. EGRESS REQUIREMENTS:

ASSEMBLY OCCUPANCY EGRESS MIXES WITH BUSINESS ON LEVEL 1 AND 2, SO LEVEL 1 THROUGH 4 ARE SUBJECT TO ASSEMBLY EGRESS REQUIREMENTS. EGRESS REQUIREMENTS FOR PENTHOUSE MECHANICAL ROOM ARE BASED ON NFPA 101 SECTION 7.12, REGARDLESS OF THE SURROUNDING OCCUPANCIES(NOT SUBJECT TO MIXED USE REQUIREMENTS)

MEANS OF EGRESS MINIMUM HEIGHT:	7'6" (EXCEPT AT EGRESS STAIRS 6'8" CLEAR MIN.)	NFPA 101 7.1.5
COMMON PATH OF TRAVEL	20'-0" FOR A SPACE WITH AN OCCUPANT LOAD OF MORE THAN 50 PERSONS	NFPA 101 - 12.2.5.1.2
	75'-0" FOR A SPACE WITH OCCUPANT LOAD OF 50 PERSONS OR LESS	NFPA 101 - 12.2.5.1.2
TOTAL TRAVEL DISTANCE LIMIT TO NEAREST EXIT	250'-0"	

	REQUIRED	PROVIDED
REQUIRED NUMBER OF EXITS LEVELS 1,3,4	2	2
REQUIRED NUMBER OF EXITS LEVEL 2	3	3

WHERE 2 EXITS ARE REQUIRED, THEY SHALL BE SEPARATED BY A MINIMUM DISTANCE OF 1/3 OF THE MAXIMUM DIAGONAL DIMENSION OF THE SPACE SERVED.

CORRIDOR MINIMUM WIDTH	44" FOR MORE THAN 50 PERSONS	NFPA 101 12.2.3.8
DEAD END CORRIDORS MAXIMUM LENGTH	20'-0"	NFPA 101 12.2.5.1.3
CORRIDOR FIRE RATING	NOT REQUIRED (FULLY SPRINKLERED BUILDING)	NFPA 101-12.3.6
OCCUPANT LOAD CRITERIA:		
B (BUSINESS) USE	OCCUPANT LOAD = GROSS AREA/ 100	NFPA 101 TABLE 7.3.1.2
A-3 (ASSEMBLY) USE	OCCUPANT LOAD = NET AREA/ 15 OR 7 AS NOTED	NFPA 101 TABLE 7.3.1.2
STOR. (STORAGE AREAS) USE	OCCUPANT LOAD = GROSS AREA/ 500	NFPA 101 TABLE 7.3.1.2
MECH.(MECHANICAL, ELECTRICAL ROOMS ETC) USE	OCCUPANT LOAD = GROSS AREA/ 100	NFPA 101 TABLE 7.3.1.2

NEITHER STAIR PRESSURIZATION NOR SMOKE PROOF ENCLOSURES ARE PLANNED FOR THE EXIT STAIRS FOR THIS NON-HIGH RISE BUILDING.

8. FIRE DETECTION AND ALARM SYSTEM REQUIREMENTS:

A COMPLETE, ANALOG-ADDRESSABLE FIRE ALARM AND MASS NOTIFICATION SYSTEM SHALL BE PROVIDED THROUGHOUT ALL LEVELS. THE MASS NOTIFICATION SYSTEM SHALL INTERFACE WITH EXISTING NASA GODDARD MASS NOTIFICATION SYSTEM.
THE FIRE ALARM SYSTEM SHALL CONSIST OF STROBES ARRANGED FOR PROVIDING A GENERAL ALARM TO PROVIDE AUDIBILITY AND INTELLIGIBILITY THROUGHOUT ALL OCCUPIED AREAS, AND STROBE COVERAGE THROUGHOUT ALL COMMON AREAS.
THE FIRE ALARM SYSTEM SHALL BE A SIEMENS XLS SYSTEM.
A REMOTE CONNECTION SHALL BE PROVIDED TO THE GODDARD BUILDING 31 OPERATORS WORK STATION FOR MONITORING OF THE SYSTEM AT THE FLIGHT PROJECTS BUILDING.
DETECTION SHALL BE PROVIDED FOR ELEVATOR LOBBIES, ELEVATOR MACHINERY ROOMS, AND FOR THE AIR HANDLING SYSTEM.
A REMOTE GRAPHIC ANNUNCIATOR SHALL BE PROVIDED AT THE MAIN ENTRANCE TO THE BUILDING.
MANUAL PULL STATIONS SHALL BE PROVIDED AT EACH LEVEL OF THE EXIT STAIRS.
WATER FLOW SWITCHES SHALL BE PROVIDED FOR EACH SPRINKLER ZONE, AND TAMPER SWITCHES SHALL BE PROVIDED FOR EACH SPRINKLER CONTROL VALVE.
SHUNT TRIP DETECTORS SHALL BE PROVIDED FOR THE ELEVATOR MACHINERY ROOM.

9. INTERIOR FINISHES:

INTERIOR FINISHES SHALL BE AS PER NFPA 101 AND NASA 8719.IIA. NO CREDIT FOR PROVIDING SPRINKLER PROTECTION SHALL BE APPLIED.
ALL WALL AND CEILING FINISHES MUST BE CLASS A AND ALL FLOOR FINISHES MUST BE CLASS I (0.45 W/CM^2 MIN. RADIANT FLUX) PER NASA-STD 8719.11A.

10. ACCESSIBLE MEANS OF EGRESS:

ALL AREAS OF BUILDING SHALL HAVE AT LEAST 2 ACCESSIBLE MEANS OF EGRESS - NFPA 101-7.5.4.1
FOR ASSEMBLY OCCUPANCY, ENCLOSED AREAS OF REFUGE ARE TO BE PROVIDED FOR LEVELS MORE THAN ONE LEVEL ABOVE THE LEVEL OF EXIT DISCHARGE - NFPA 101- 12.2.2.12, 7.5.4.3, 7.5.4.1.1, 7.2.1.2.1.1
EACH AREA OF REFUGE SHALL BE SIZED TO ACCOMMODATE ONE WHEELCHAIR SPACE OF 30"X48" FOR EVERY 200 OCCUPANTS. THREE SPACES ARE REQUIRED FOR LEVEL 3. TWO SPACES ARE REQUIRED FOR LEVEL 4. ONE SPACE IS REQUIRED FOR LEVEL 2.
THERE ARE NO STORIES MORE THAN 4 LEVELS ABOVE A STORY OF EXIT DISCHARGE (LEVELS 1 + 2). BASED ON THIS, IT IS NOT REQUIRED THAT ELEVATORS COMPLY WITH NFPA 101.7.5.4.5 (NFPA 101-7.5.4.7)

LIFE SAFETY LEGEND:

XXX / YYY — XXX = EXIT LOAD, PERSONS; YYY = EXIT CAPACITY, PERSONS
EGRESS DIRECTION
COMMON PATH OF TRAVEL
DEAD END
1 HOUR RATED FIRE BARRIER WALL
2 HOUR RATED FIRE BARRIER WALL
S — SMOKE BARRIER WALL (NON FIRE RATED)
AREA OF REFUGE

(SPECIFIC AREA) OCCUPANT LOAD SYMBOL:
AREA NUMBER
OCCUPANCY TYPE
AREA
OCCUPANT LOAD FACTOR
OCCUPANT LOAD

FE — FIRE EXTINGUISHER

OCCUPANT LOAD CALCULATIONS

Level	Number	Occupancy Type	Area	Occupant Load Factor	Occupant Load
Not Placed	VP401	VERTICAL PENETRATION	Not Placed	0	0
					0
LEVEL 1	N107	A-3	764 SF	15	51
LEVEL 1	N158	A-3	299 SF	15	20
LEVEL 1	N150	A-3	286 SF	15	19
LEVEL 1	N114	A-3	286 SF	15	19
LEVEL 1	N118	A-3	286 SF	15	19
LEVEL 1	N112	A-3	286 SF	15	19
LEVEL 1	N104	A-3	299 SF	15	20
LEVEL 1	S107	A-3	677 SF	15	45
LEVEL 1	S123	A-3	213 SF	15	14
LEVEL 1	S141	A-3	213 SF	15	14
LEVEL 1	B1.1	B	4222 SF	100	42
LEVEL 1	B1.N	B	7665 SF	100	77
LEVEL 1	B1.S	B	9204 SF	100	92
LEVEL 1	C112	M/E/P	937 SF	100	9
LEVEL 1	C115	M/E/P	276 SF	100	3
LEVEL 1	S147	M/E/P	151 SF	100	2
LEVEL 1	N117A	M/E/P	124 SF	100	1
LEVEL 1	N147	M/E/P	150 SF	100	2
LEVEL 1	C221	M/E/P	247 SF	100	3
LEVEL 1	C110	M/E/P	507 SF	100	5
LEVEL 1	S115	STOR.	220 SF	500	0
LEVEL 1	N111	STOR.	204 SF	500	0
LEVEL 1	C106	STOR.	63 SF	500	0
LEVEL 1	C103	STOR.	77 SF	500	0
LEVEL 1	VP101	VERTICAL PENETRATION	162 SF	0	0
LEVEL 1	VP105	VERTICAL PENETRATION	8 SF	0	0
LEVEL 1	VP106	VERTICAL PENETRATION	8 SF	0	0
					476
LEVEL 2	N241	A-3	224 SF	15	15
LEVEL 2	N207	A-3	521 SF	15	35
LEVEL 2	S207	A-3	522 SF	15	35
LEVEL 2	S241	A-3	213 SF	15	14
LEVEL 2	C211	A-3	1629 SF	7	233
LEVEL 2	C202	A-3	223 SF	15	15
LEVEL 2	S223	A-3	213 SF	15	14
LEVEL 2	N223	A-3	202 SF	15	13
LEVEL 2	B2.N	B	9616 SF	100	96
LEVEL 2	B2.1	B	4732 SF	100	47
LEVEL 2	B2.S	B	9650 SF	100	96
LEVEL 2	N247	M/E/P	151 SF	100	2
LEVEL 2	C215	M/E/P	274 SF	100	3
LEVEL 2	S247	M/E/P	152 SF	100	2
LEVEL 2	N215	STOR.	217 SF	500	0
LEVEL 2	S215	STOR.	219 SF	500	0
LEVEL 2	C209	STOR.	78 SF	500	0
LEVEL 2	C206	STOR.	63 SF	500	0
LEVEL 2	VP202	VERTICAL PENETRATION	128 SF	0	0
LEVEL 2	VP203	VERTICAL PENETRATION	129 SF	0	0
LEVEL 2	VP204	VERTICAL PENETRATION	75 SF	0	0
LEVEL 2	VP201	VERTICAL PENETRATION	149 SF	0	0
LEVEL 2	VP205	VERTICAL PENETRATION	9 SF	0	0

OCCUPANT LOAD CALCULATIONS

Level	Number	Occupancy Type	Area	Occupant Load Factor	Occupant Load
LEVEL 2	VP206	VERTICAL PENETRATION	8 SF	0	0
					620
LEVEL 3	N307	A-3	521 SF	15	35
LEVEL 3	S307	A-3	521 SF	15	35
LEVEL 3	S341	A-3	213 SF	15	14
LEVEL 3	C302	A-3	223 SF	15	15
LEVEL 3	RT1	A-3	524 SF	15	35
LEVEL 3	N341	A-3	223 SF	15	15
LEVEL 3	N323	A-3	202 SF	15	13
LEVEL 3	S323	A-3	213 SF	15	14
LEVEL 3	RT2	A-3	165 SF	15	12
LEVEL 3	B3.N	B	9616 SF	100	96
LEVEL 3	B3.1	B	3965 SF	100	40
LEVEL 3	B3.S	B	9644 SF	100	96
LEVEL 3	S347	M/E/P	149 SF	100	1
LEVEL 3	C315	M/E/P	283 SF	100	3
LEVEL 3	N347	M/E/P	150 SF	100	2
LEVEL 3	N315	STOR.	220 SF	500	0
LEVEL 3	C307	STOR.	177 SF	500	0
LEVEL 3	C306	STOR.	62 SF	500	0
LEVEL 3	S315	STOR.	221 SF	500	0
LEVEL 3	C303	STOR.	77 SF	500	0
LEVEL 3	VP301	VERTICAL PENETRATION	157 SF	0	0
LEVEL 3	VP302	VERTICAL PENETRATION	128 SF	0	0
LEVEL 3	VP303	VERTICAL PENETRATION	129 SF	0	0
LEVEL 3	VP304	VERTICAL PENETRATION	76 SF	0	0
LEVEL 3	VP301	VERTICAL PENETRATION	145 SF	0	0
LEVEL 3	VP305	VERTICAL PENETRATION	8 SF	0	0
LEVEL 3	VP306	VERTICAL PENETRATION	9 SF	0	0
					426
LEVEL 4	N423	A-3	213 SF	15	14
LEVEL 4	N407	A-3	523 SF	15	35
LEVEL 4	S407	A-3	521 SF	15	35
LEVEL 4	C402	A-3	226 SF	15	15
LEVEL 4	N441	A-3	213 SF	15	14
LEVEL 4	B4.1	B	23975 SF	100	240
LEVEL 4	N447	M/E/P	151 SF	100	2
LEVEL 4	C415	M/E/P	283 SF	100	3
LEVEL 4	S447	M/E/P	147 SF	100	1
LEVEL 4	N415	STOR.	219 SF	500	0
LEVEL 4	S415	STOR.	215 SF	500	0
LEVEL 4	C409	STOR.	177 SF	500	0
LEVEL 4	C406	STOR.	64 SF	500	0
LEVEL 4	C403	STOR.	77 SF	500	0
LEVEL 4	VP402	VERTICAL PENETRATION	129 SF	0	0
LEVEL 4	VP403	VERTICAL PENETRATION	128 SF	0	0
LEVEL 4	VP405	VERTICAL PENETRATION	157 SF	0	0
LEVEL 4	VP406	VERTICAL PENETRATION	8 SF	0	0
LEVEL 4	VP407	VERTICAL PENETRATION	7 SF	0	0
					359
PENTHOUSE	C500	M/E/P	4164 SF	100	42
					42
					1923

100% SUBMITTAL

AECOM TECHNICAL SERVICES, INC.
3101 WILSON BOULEVARD
SUITE 900
ARLINGTON, VA 22201
T: 703-682-4900 F: 703.682.4901
www.aecom.com

SEAL AREA

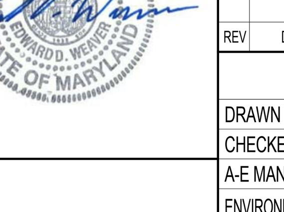

KEY PLAN

REV	DATE	DESCRIPTION	S&R BR.	CUSTOMER	PM	SECT. HEAD

	INITIALS	DATE
DRAWN BY	LA/NS	
CHECKED BY	BW/MW	
A-E MANAGER	EW	
ENVIRONMENTAL BRANCH	JH	
SAFETY BRANCH	CS	
CM	MMD	
PM	RWP	
CUSTOMER	JWB	
ENG. BRANCH	DGL	

LIFE SAFETY

LIFE SAFETY CODE SUMMARY

LS-001

FLIGHT PROJECTS BUILDING

NATIONAL AERONAUTICS AND SPACE ADMINISTRATION
GODDARD SPACE FLIGHT CENTER GREENBELT, MARYLAND
FACILITIES MANAGEMENT DIVISION

DATE ISSUED	CoF CODE OR WR#	AECOM PROJECT NO.	SCALE
10/12/2012	12GXAZ	60187636	12" = 1'-0"

FILE DATE: 10/11/2012 5:49:28 PM

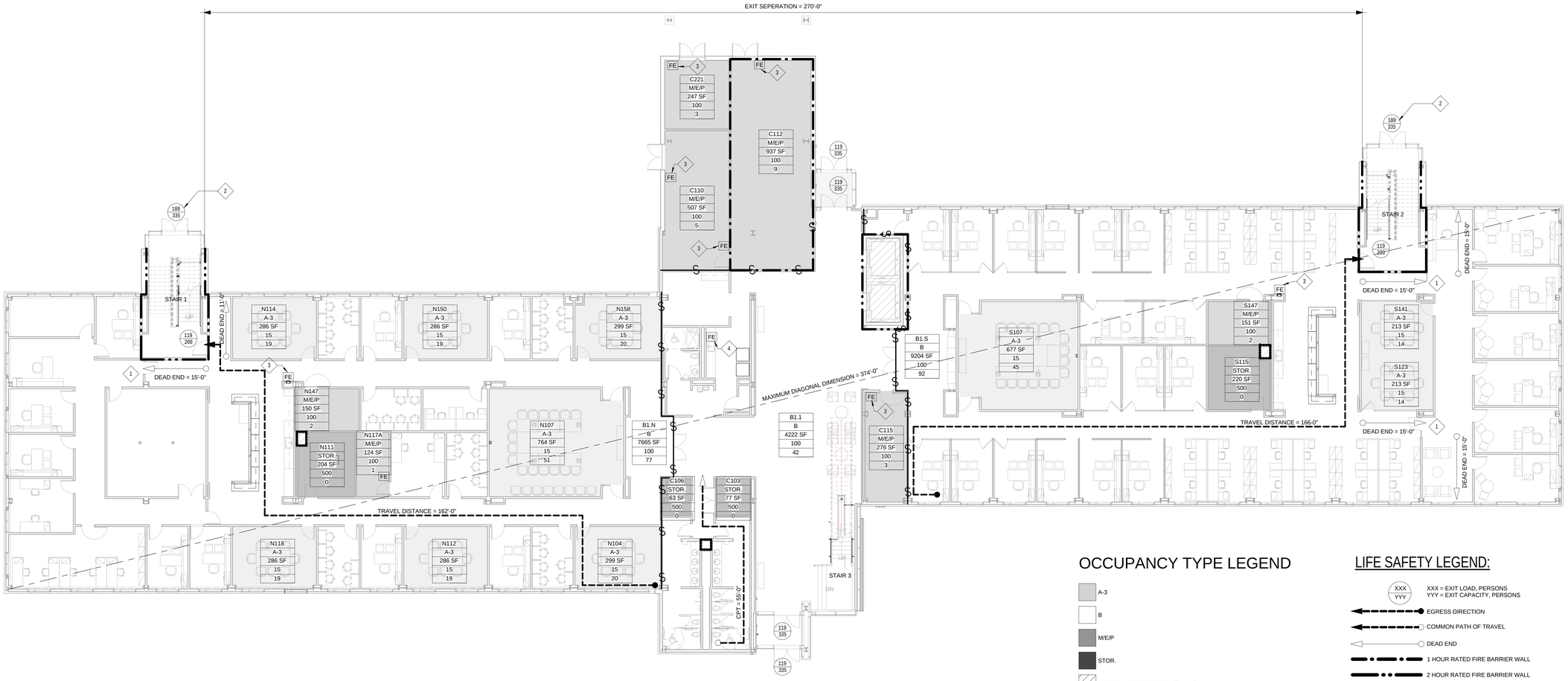

OCCUPANCY TYPE LEGEND

- A-3
- B
- M/E/P
- STOR.
- VERTICAL PENETRATION (SHAFT)

LIFE SAFETY LEGEND:

- XXX / YYY — XXX = EXIT LOAD, PERSONS; YYY = EXIT CAPACITY, PERSONS
- EGRESS DIRECTION
- COMMON PATH OF TRAVEL
- DEAD END
- 1 HOUR RATED FIRE BARRIER WALL
- 2 HOUR RATED FIRE BARRIER WALL
- S — SMOKE BARRIER WALL (NON FIRE RATED)
- AREA OF REFUGE

(SPECIFIC AREA) OCCUPANT LOAD SYMBOL:

- AREA NUMBER
- OCCUPANCY TYPE
- AREA
- OCCUPANT LOAD FACTOR
- OCCUPANT LOAD

FE — FIRE EXTINGUISHER

1 LEVEL 1 - LIFE SAFETY PLAN

LS-010 | REF. A-301 SCALE: 3/32" = 1'-0"

GENERAL NOTES:

KEY NOTES:

1. DEAD ENDS ARE CREATED BY LOCKS THAT ALLOW FREE EGRESS IN ONE DIRECTION ONLY (FROM THE SUITE)
2. EXIT LOAD SHOWN AT STAIR DISCHARGE IS THE MAXIMUM LOAD FROM THE BUILDING FROM LEVEL 2.
3. FIRE EXTINGUISHER - DRY CHEMICAL TYPE IN ENAMELED CONTAINER: UL LISTED 40B-C, 5 lb NOMINAL CAPACITY.
4. FIRE EXTINGUISHER - DRY CHEMICAL TYPE IN ENAMELED CONTAINER: UL LISTED 40B-C, 5 lb NOMINAL CAPACITY - LOCATED BELOW CABINET.

NORTH

3/32"=1'-0" 8' 4' 0 12' 24'

100% SUBMITTAL

AECOM
AECOM TECHNICAL SERVICES, INC.
3101 WILSON BOULEVARD
SUITE 900
ARLINGTON, VA 22201
T: 703-682-4900 F: 703.682.4901
www.aecom.com

SEAL AREA

BOARD OF ARCHITECTURE 10004 EDWARD D. WEBER STATE OF MARYLAND

KEY PLAN

REV	DATE	DESCRIPTION	S&R BR.	CUSTOMER	PM	SECT. HEAD

	INITIALS	DATE
DRAWN BY	LA/NS	
CHECKED BY	BW/MW	
A-E MANAGER	EW	
ENVIRONMENTAL BRANCH	JH	
SAFETY BRANCH	CS	
CM	MMD	
PM	RWP	
CUSTOMER	JWB	
ENG. BRANCH	DGL	
GENERAL		

LEVEL 1 - LIFE SAFETY PLAN

LS-010

FLIGHT PROJECTS BUILDING

NATIONAL AERONAUTICS AND SPACE ADMINISTRATION
GODDARD SPACE FLIGHT CENTER GREENBELT, MARYLAND
FACILITIES MANAGEMENT DIVISION

DATE ISSUED	CoF CODE OR WR#	AECOM PROJECT NO.	SCALE
10/12/2012	12GXAZ	60187636	As indicated

FILE DATE: 10/11/2012 5:49:44 PM

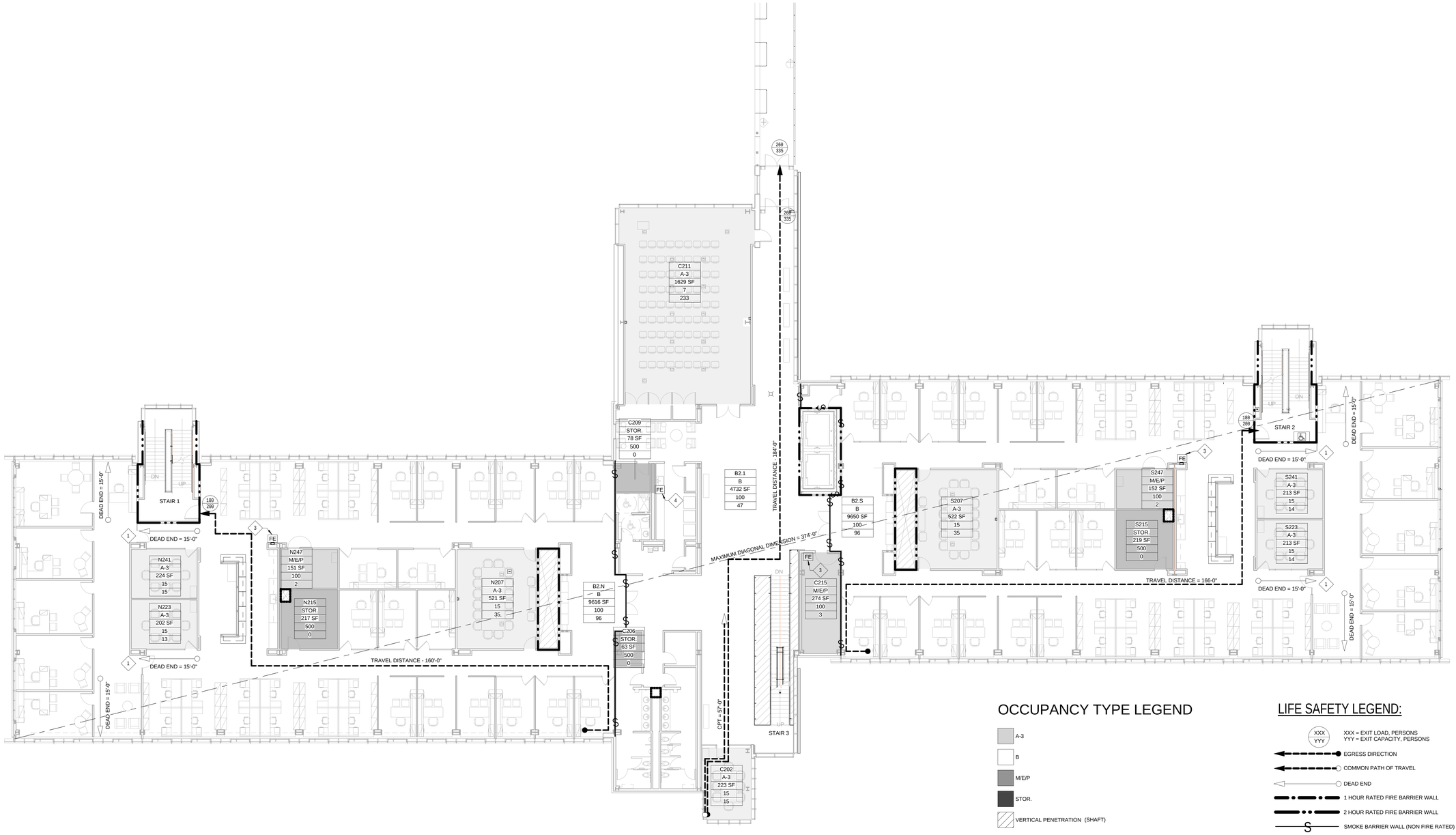

OCCUPANCY TYPE LEGEND

- A-3
- B
- M/E/P
- STOR.
- VERTICAL PENETRATION (SHAFT)

LIFE SAFETY LEGEND:

- XXX / YYY — XXX = EXIT LOAD, PERSONS; YYY = EXIT CAPACITY, PERSONS
- EGRESS DIRECTION
- COMMON PATH OF TRAVEL
- DEAD END
- 1 HOUR RATED FIRE BARRIER WALL
- 2 HOUR RATED FIRE BARRIER WALL
- S — SMOKE BARRIER WALL (NON FIRE RATED)
- AREA OF REFUGE

(SPECIFIC AREA) OCCUPANT LOAD SYMBOL:

- AREA NUMBER
- OCCUPANCY TYPE
- AREA
- OCCUPANT LOAD FACTOR
- OCCUPANT LOAD

FE — FIRE EXTINGUISHER

1 LEVEL 2 - LIFE SAFETY PLAN

LS-020 | REF. A-301 SCALE: 3/32" = 1'-0"

GENERAL NOTES:

1. STAIR EXIT CAPACITY: C = 146.7 + (W-44/0.218) ; W= WIDTH OF STAIR PER NFPA 101 SEC 7.3.3.2
   STAIR 1 EXIT CAPACITY = 146.7 + (60-44/0.218) = 220
   STAIR 2 EXIT CAPACITY = 146.7 + (60-44/0.218) = 220
   STAIR 3 EXIT CAPACITY = 146.7 + (60-44/0.218) = 220
   EXIT CAPACITY SHOWN FOR BOTH ENCLOSED STAIRS IS LIMITED BY THE SINGLE EXIT DOOR WIDTH - 40 INCHES CLEAR WIDTH.
   40"/(0.2"/PERSON) = 200 PERSONS PER DOOR

KEY NOTES:

1. DEAD ENDS ARE CREATED BY LOCKS THAT ALLOW FREE EGRESS IN ONE DIRECTION ONLY (FROM THE SUITE)
3. FIRE EXTINGUISHER - DRY CHEMICAL TYPE IN ENAMELED CONTAINER: UL LISTED 40B-C, 5 lb NOMINAL CAPACITY.
4. FIRE EXTINGUISHER - DRY CHEMICAL TYPE IN ENAMELED CONTAINER: UL LISTED 40B-C, 5 lb NOMINAL CAPACITY - LOCATED BELOW CABINET.

NORTH

3/32"=1'-0" 8' 4' 0 12' 24'

100% SUBMITTAL

AECOM

AECOM TECHNICAL SERVICES, INC.
3101 WILSON BOULEVARD
SUITE 900
ARLINGTON, VA 22201

T: 703-682-4900 F: 703.682.4901
www.aecom.com

SEAL AREA

BOARD OF ARCHITECTS 10004 ERIC D. WEIMOND STATE OF MARYLAND

KEY PLAN

REV	DATE	DESCRIPTION	S&R BR.	CUSTOMER	PM	SECT. HEAD

	INITIALS	DATE
DRAWN BY	LA/NS	
CHECKED BY	BW/MW	
A-E MANAGER	EW	
ENVIRONMENTAL BRANCH	JH	
SAFETY BRANCH	CS	
CM	MMD	
PM	RWP	
CUSTOMER	JWB	
ENG. BRANCH	DGL	
GENERAL		

LEVEL 2 - LIFE SAFETY PLAN

LS-020

FLIGHT PROJECTS BUILDING

NATIONAL AERONAUTICS AND SPACE ADMINISTRATION

GODDARD SPACE FLIGHT CENTER GREENBELT, MARYLAND
FACILITIES MANAGEMENT DIVISION

DATE ISSUED	CoF CODE OR WR#	AECOM PROJECT NO.	SCALE
10/12/2012	12GXAZ	60187636	As indicated

FILE DATE: 10/11/2012 5:50:07 PM

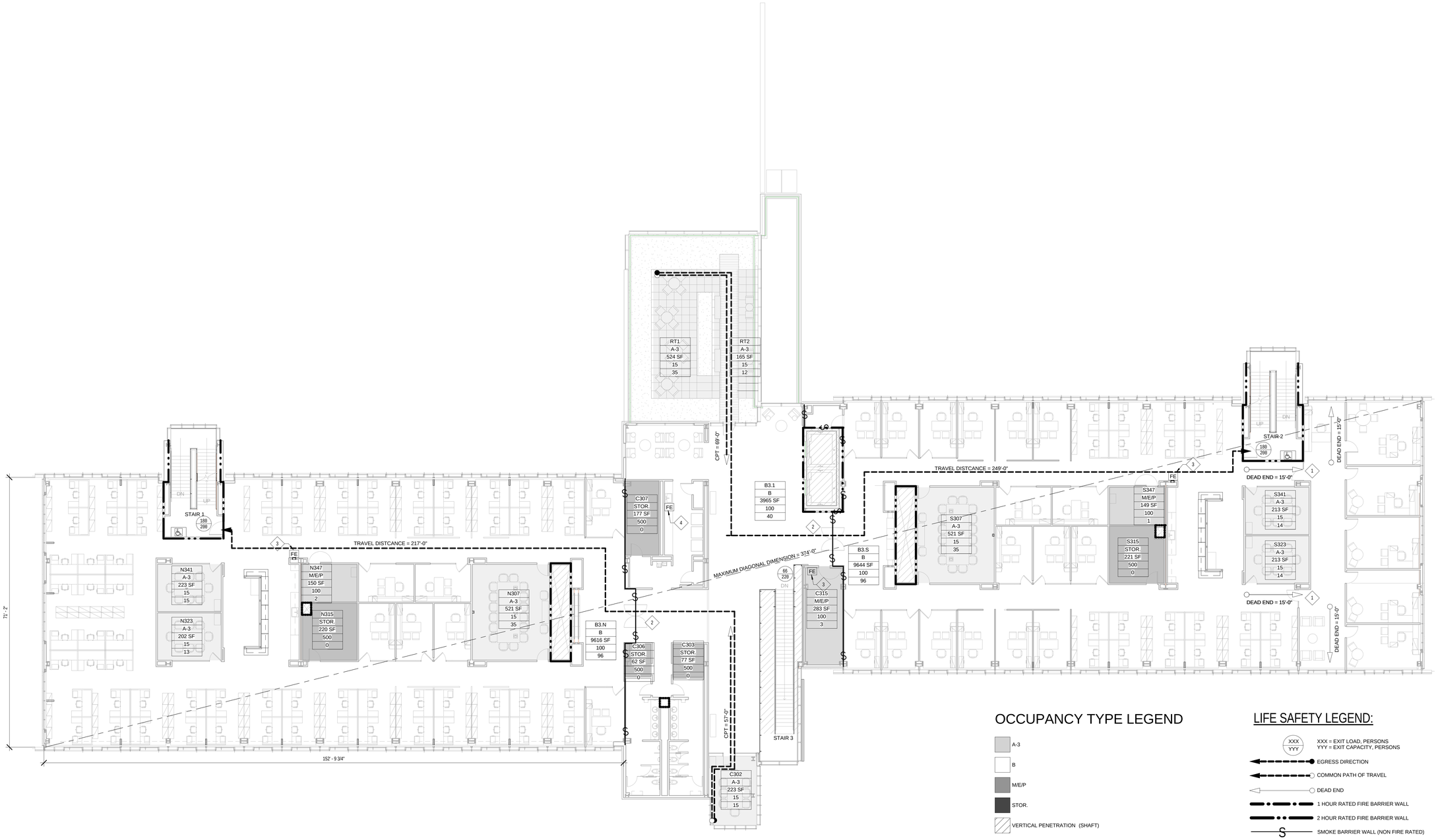

OCCUPANCY TYPE LEGEND

- A-3
- B
- M/E/P
- STOR.
- VERTICAL PENETRATION (SHAFT)

LIFE SAFETY LEGEND:

- XXX / YYY — XXX = EXIT LOAD, PERSONS; YYY = EXIT CAPACITY, PERSONS
- EGRESS DIRECTION
- COMMON PATH OF TRAVEL
- DEAD END
- 1 HOUR RATED FIRE BARRIER WALL
- 2 HOUR RATED FIRE BARRIER WALL
- S — SMOKE BARRIER WALL (NON FIRE RATED)
- AREA OF REFUGE

(SPECIFIC AREA) OCCUPANT LOAD SYMBOL:

- AREA NUMBER
- OCCUPANCY TYPE
- AREA
- OCCUPANT LOAD FACTOR
- OCCUPANT LOAD

FE — FIRE EXTINGUISHER

1 LEVEL 3 - LIFE SAFETY PLAN

LS-030 REF. A-301 SCALE: 3/32" = 1'-0"

GENERAL NOTES:

1. STAIR EXIT CAPACITY: C = 146.7 + (W-44/0.218) ; W= WIDTH OF STAIR PER NFPA 101 SEC 7.3.3.2
   STAIR 1 EXIT CAPACITY = 146.7 + (60-44/0.218) = 220
   STAIR 2 EXIT CAPACITY = 146.7 + (60-44/0.218) = 220
   STAIR 3 EXIT CAPACITY = 146.7 + (60-44/0.218) = 220
   EXIT CAPACITY SHOWN FOR BOTH ENCLOSED STAIRS IS LIMITED BY THE SINGLE EXIT DOOR WIDTH - 40 INCHES CLEAR WIDTH.
   40"/(0.2"/PERSON) = 200 PERSONS PER DOOR

KEY NOTES:

1. DEAD ENDS ARE CREATED BY LOCKS THAT ALLOW FREE EGRESS IN ONE DIRECTION ONLY (FROM THE SUITE)
2. DOORS SWING IN EITHER DIRECTION TO PERMIT EGRESS IN EITHER DIRECTION, TO ALLOW EITHER ENCLOSED STAIR AS AN OPTION FROM EITHER SIDE.
3. FIRE EXTINGUISHER - DRY CHEMICAL TYPE IN ENAMELED CONTAINER: UL LISTED 40B-C, 5 lb NOMINAL CAPACITY.
4. FIRE EXTINGUISHER - DRY CHEMICAL TYPE IN ENAMELED CONTAINER: UL LISTED 40B-C, 5 lb NOMINAL CAPACITY - LOCATED BELOW CABINET.

NORTH

3/32"=1'-0" 8' 4' 0 12' 24'

100% SUBMITTAL

AECOM

AECOM TECHNICAL SERVICES, INC.
3101 WILSON BOULEVARD
SUITE 900
ARLINGTON, VA 22201

T: 703-682-4900 F: 703.682.4901
www.aecom.com

SEAL AREA

BOARD OF ARCHITECTS 103594 REGISTERED ARCHITECT STATE OF MARYLAND

KEY PLAN

REV	DATE	DESCRIPTION	S&R BR.	CUSTOMER	PM	SECT. HEAD

	INITIALS	DATE
DRAWN BY	LA/NS	
CHECKED BY	BW/MW	
A-E MANAGER	EW	
ENVIRONMENTAL BRANCH	JH	
SAFETY BRANCH	CS	
CM	MMD	
PM	RWP	
CUSTOMER	JWB	
ENG. BRANCH	DGL	
GENERAL		

LEVEL 3 - LIFE SAFETY PLAN

LS-030

FLIGHT PROJECTS BUILDING

NATIONAL AERONAUTICS AND SPACE ADMINISTRATION

GODDARD SPACE FLIGHT CENTER GREENBELT, MARYLAND
FACILITIES MANAGEMENT DIVISION

DATE ISSUED	CoF CODE OR WR#	AECOM PROJECT NO.	SCALE
10/12/2012	12GXAZ	60187636	As indicated

FILE DATE: 10/11/2012 5:50:28 PM

OCCUPANCY TYPE LEGEND

- A-3
- B
- M/E/P
- STOR.
- VERTICAL PENETRATION (SHAFT)

LIFE SAFETY LEGEND:

- XXX / YYY — XXX = EXIT LOAD, PERSONS; YYY = EXIT CAPACITY, PERSONS
- EGRESS DIRECTION
- COMMON PATH OF TRAVEL
- DEAD END
- 1 HOUR RATED FIRE BARRIER WALL
- 2 HOUR RATED FIRE BARRIER WALL
- S — SMOKE BARRIER WALL (NON FIRE RATED)
- AREA OF REFUGE

(SPECIFIC AREA) OCCUPANT LOAD SYMBOL:

- AREA NUMBER
- OCCUPANCY TYPE
- AREA
- OCCUPANT LOAD FACTOR
- OCCUPANT LOAD

FE — FIRE EXTINGUISHER

1 LEVEL 4 - LIFE SAFETY PLAN

LS-040 REF. A-301 SCALE: 3/32" = 1'-0"

100% SUBMITTAL

NORTH

GENERAL NOTES:

1. STAIR EXIT CAPACITY: C = 146.7 + (W-44/0.218) ; W= WIDTH OF STAIR PER NFPA 101 SEC 7.3.3.2
   STAIR 1 EXIT CAPACITY = 146.7 + (60-44/0.218) = 220
   STAIR 2 EXIT CAPACITY = 146.7 + (60-44/0.218) = 220
   STAIR 3 EXIT CAPACITY = 146.7 + (60-44/0.218) = 220
   EXIT CAPACITY SHOWN FOR BOTH ENCLOSED STAIRS IS LIMITED BY THE SINGLE EXIT DOOR WIDTH - 40 INCHES CLEAR WIDTH.
   40"/(0.2"/PERSON) = 200 PERSONS PER DOOR

KEY NOTES:

1. DEAD ENDS ARE CREATED BY LOCKS THAT ALLOW FREE EGRESS IN ONE DIRECTION ONLY (FROM THE SUITE)
2. DOORS SWING IN EITHER DIRECTION TO PERMIT EGRESS IN EITHER DIRECTION, TO ALLOW EITHER ENCLOSED STAIR AS AN OPTION FROM EITHER SIDE.
3. FIRE EXTINGUISHER - DRY CHEMICAL TYPE IN ENAMELED CONTAINER: UL LISTED 40B-C, 5 lb NOMINAL CAPACITY.
4. FIRE EXTINGUISHER - DRY CHEMICAL TYPE IN ENAMELED CONTAINER: UL LISTED 40B-C, 5 lb NOMINAL CAPACITY - LOCATED BELOW CABINET.

3/32"=1'-0" 8' 4' 0 12' 24'

AECOM
AECOM TECHNICAL SERVICES, INC.
3101 WILSON BOULEVARD
SUITE 900
ARLINGTON, VA 22201
T: 703-682-4900 F: 703.682.4901
www.aecom.com

SEAL AREA

BOARD OF ARCHITECTURE 10004 EDWARD D. WEBER 2012 STATE OF MARYLAND

KEY PLAN

REV	DATE	DESCRIPTION	S&R BR.	CUSTOMER	PM	SECT. HEAD

	INITIALS	DATE
DRAWN BY	LA/NS	
CHECKED BY	BW/MW	
A-E MANAGER	EW	
ENVIRONMENTAL BRANCH	JH	
SAFETY BRANCH	CS	
CM	MMD	
PM	RWP	
CUSTOMER	JWB	
ENG. BRANCH	DGL	
GENERAL		

LEVEL 4 - LIFE SAFETY PLAN

LS-040

FLIGHT PROJECTS BUILDING

NATIONAL AERONAUTICS AND SPACE ADMINISTRATION

GODDARD SPACE FLIGHT CENTER GREENBELT, MARYLAND
FACILITIES MANAGEMENT DIVISION

DATE ISSUED	CoF CODE OR WR#	AECOM PROJECT NO.	SCALE
10/12/2012	12GXAZ	60187636	As indicated

FILE DATE: 10/11/2012 5:50:45 PM

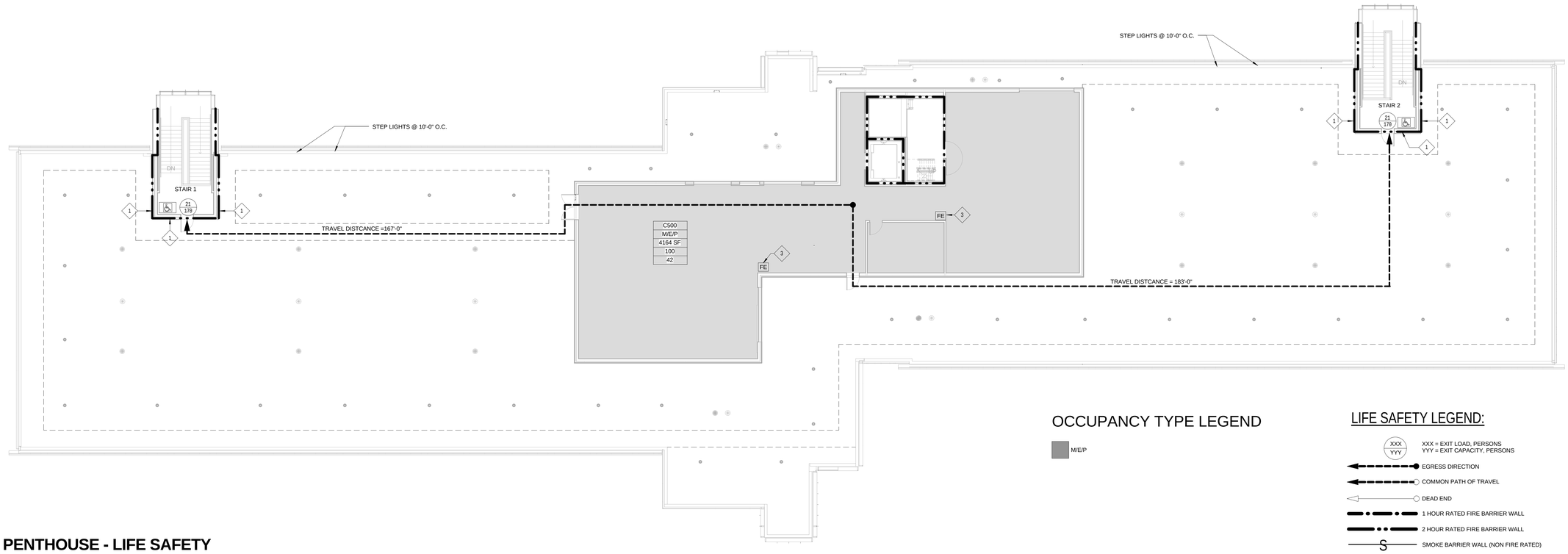

1 PENTHOUSE - LIFE SAFETY PLAN

LS-050 REF. A-301 SCALE: 3/32" = 1'-0"

OCCUPANCY TYPE LEGEND

M/E/P

LIFE SAFETY LEGEND:

XXX / YYY — XXX = EXIT LOAD, PERSONS; YYY = EXIT CAPACITY, PERSONS

EGRESS DIRECTION

COMMON PATH OF TRAVEL

DEAD END

1 HOUR RATED FIRE BARRIER WALL

2 HOUR RATED FIRE BARRIER WALL

S — SMOKE BARRIER WALL (NON FIRE RATED)

AREA OF REFUGE

(SPECIFIC AREA) OCCUPANT LOAD SYMBOL:

AREA NUMBER
OCCUPANCY TYPE
AREA
OCCUPANT LOAD FACTOR
OCCUPANT LOAD

FE — FIRE EXTINGUISHER

GENERAL NOTES:

1. STAIR EXIT CAPACITY: C = 146.7 + (W-44/0.218) ; W= WIDTH OF STAIR PER NFPA 101 SEC 7.3.3.2
   STAIR 1 EXIT CAPACITY = 146.7 + (60-44/0.218) = 220
   STAIR 2 EXIT CAPACITY = 146.7 + (60-44/0.218) = 220
   STAIR 3 EXIT CAPACITY = 146.7 + (60-44/0.218) = 220

KEY NOTES:

1. STAIR TOWERS NEED TO BE FIRE RATED AS SHOWN A MIN. OF 10 FT ABOVE THE PENTHOUE LEVEL.
3. FIRE EXTINGUISHER - DRY CHEMICAL TYPE IN ENAMELED CONTAINER: UL LISTED 40B-C, 5 lb NOMINAL CAPACITY - LOCATED BELOW CABINET.

NORTH

3/32"=1'-0" 8' 4' 0 12' 24'

100% SUBMITTAL

AECOM
AECOM TECHNICAL SERVICES, INC.
3101 WILSON BOULEVARD
SUITE 900
ARLINGTON, VA 22201
T: 703-682-4900 F: 703.682.4901
www.aecom.com

SEAL AREA

BOARD OF ARCHITECTS 10094 CONTINUED UNDER THE LAWS OF THE STATE OF MARYLAND

KEY PLAN

REV	DATE	DESCRIPTION	S&R BR.	CUSTOMER	PM	SECT. HEAD

	INITIALS	DATE
DRAWN BY	LA/NS	
CHECKED BY	BW/MW	
A-E MANAGER	EW	
ENVIRONMENTAL BRANCH	JH	
SAFETY BRANCH	CS	
CM	MMD	
PM	RWP	
CUSTOMER	JWB	
ENG. BRANCH	DGL	
GENERAL		

PENTHOUSE - LIFE SAFETY PLAN

LS-050

FLIGHT PROJECTS BUILDING

NATIONAL AERONAUTICS AND SPACE ADMINISTRATION
GODDARD SPACE FLIGHT CENTER GREENBELT, MARYLAND
FACILITIES MANAGEMENT DIVISION

DATE ISSUED	CoF CODE OR WR#	AECOM PROJECT NO.	SCALE
10/12/2012	12GXAZ	60187636	As indicated

FILE DATE: 10/11/2012 5:50:55 PM

GENERAL NOTES:

1. SURVEY INFORMATION FROM TOPOGRAPHIC SURVEY TITLED "GODDARD SPACE FLIGHT CENTER", DATED MARCH, 2011, AND SUPPLEMENTAL SURVEY ADDED JUNE 2, 2011, PROVIDED BY A. MORTON THOMAS AND ASSOCIATES, INC., CONSULTING ENGINEERS, 12750 TWINBROOK PARKWAY, ROCKVILLE, MD (AMT FILE NO 110-704.001).

2. THE EXISTING UNDERGROUND UTILITIES & FACILITIES SHOWN HEREON ARE BASED ON AVAILABLE INFORMATION. CONTRACTOR SHALL BE RESPONSIBLE FOR DETERMINING THE EXACT LOCATION OF ALL UTILITIES BEFORE COMMENCING WORK AND FOR ANY DAMAGES WHICH OCCUR BY HIS FAILURE TO LOCATE OR PRESERVE THESE UNDERGROUND UTILITIES. IF DURING CONSTRUCTION OPERATIONS THE CONTRACTOR SHOULD ENCOUNTER UTILITIES OTHER THAN THOSE SHOWN ON THE PLANS, HE SHALL IMMEDIATELY NOTIFY THE GSFC PROJECT MANAGER AND TAKE NECESSARY AND PROPER STEPS TO PROTECT THE UTILITIES AND ASSURE CONTINUANCE OF SERVICES. CONTRACTOR SHALL TEST PIT WHERE NEW UTILITIES INTERSECT WITH OR CONNECT TO EXISTING UTILITIES AS PART OF THE CONSTRUCTION PROCESS.

3. THE CONTRACTOR SHALL BE RESPONSIBLE FOR OBTAINING ALL NECESSARY PERMITS AND LICENSES REQUIRED BY THE STATE OF MARYLAND, OR OTHER GOVERNING AGENCIES INVOLVED UNDER THIS CONTRACT.

4. THE CONTRACTOR SHALL COORDINATE FINISHED PAVEMENT GRADES WITH ELEVATIONS AND LOCATIONS OF EXISTING ROADS AND STREETS.

5. CONTRACTOR SHALL NOTIFY "MISS UTILITY" AT 1-800-257-7777 AND GSFC PROJECT MANAGER PRIOR TO THE START OF WORK.

6. ALL EROSION AND SEDIMENT CONTROL MEASURES SHALL BE INSTALLED AND MAINTAINED IN ACCORDANCE WITH THE "MARYLAND DEPARTMENT OF THE ENVIRONMENT". THE CONTRACTOR SHALL BE THOROUGHLY FAMILIAR WITH ALL APPLICABLE MEASURES CONTAINED THEREIN WHICH MAY BE PERTINENT TO THIS PROJECT. INSTALL EROSION AND SEDIMENT CONTROL MEASURES AS THE FIRST STEP IN GRADING OPERATIONS. REMOVE ALL TEMPORARY EROSION CONTROL MEASURES AFTER COMPLETION OF THE PROJECT.

7. OTHER WORK (GRADING, EXCAVATING, AND CONSTRUCTION) ON THE PROJECT SHALL NOT COMMENCE UNTIL THE APPROPRIATE EROSION AND SEDIMENT CONTROL MEASURES ARE IN PLACE AS SPECIFIED ON THE PLAN.

8. ALL TOPSOIL AND EXCAVATED MATERIAL SHALL BE TEMPORARILY STOCKPILED IN AREA DESIGNATED ON SHEET C-106.

9. LENGTHS OF LINES INDICATED ON THE DRAWING FOR UTILITY SYSTEMS ARE APPROXIMATE ONLY. IT SHALL BE THE CONTRACTOR'S RESPONSIBILITY FOR DETERMINING THE EXACT AMOUNT OF PIPING, CONDUIT, WIRE, AND/OR DUCT REQUIRED TO FURNISH A COMPLETE WORKING SYSTEM IN ACCORDANCE WITH THE INTENT OF THE DRAWINGS.

10. WHERE UNDERGROUND UTILITIES ARE TO BE INSTALLED BENEATH EXISTING UTILITIES/DUCTBANKS TO REMAIN, ALL BACKFILL MATERIALS SHALL ACHIEVE 95% COMPACTION. IF MINIMUM COMPACTION REQUIREMENTS CANNOT BE MET, ALL UTILITIES UNDERCUT BY NEW UTILITY CONSTRUCTION SHALL BE BACKFILLED WITH FLOWABLE FILL AS DIRECTED BY THE GSFC PROJECT MANAGER AT THE CONTRACTOR'S EXPENSE.

11. DIMENSIONS AND COORDINATES SHOWN AT CURB ARE TO FACE OF CURB. COORDINATES SHOWN AT CURB INLETS ARE AT THE FACE OF CURB AND CENTER OF BARREL. SPOT ELEVATIONS SHOWN AT CURB INLETS ARE AT TOP OF INLET. SPOT ELEVATIONS SHOWN ON DROP INLETS ARE AT TOP OF INLETS.

12. FINISH CONTOURS SHOWN ARE TO TOP OF TOPSOIL, TOP OF PAVEMENT, TOP OF SIDEWALK, ETC. CONTRACTOR SHALL PROVIDE GRADE TO SUBGRADE ELEVATION REQUIRED.

13. PROVIDE POSITIVE DRAINAGE AT ALL GRADED AREAS.

14. PROVIDE UNIFORM (STRAIGHT) GRADE BETWEEN SPOT ELEVATIONS, FINISH CONTOURS, TOP OF INLETS, ETC.

15. ALL UNPAVED DISTURBED AREAS SHALL BE SEEDED IN ACCORDANCE WITH PROJECT SPECIFICATIONS.

16. ALL SITE FEATURES INDICATED TO REMAIN AND DAMAGED OR REMOVED AS PART OF THIS PROJECT SHALL BE REPAIRED OR REPLACED IN-KIND OR AS DIRECTED BY THE GSFC PROJECT MANAGER AT THE CONTRACTOR'S EXPENSE.

17. LIMIT OF DISTURBANCE (LOD) INDICATED REFLECTS AREAS OF REGULATED LAND DISTURBANCE. THE CONTRACTOR SHALL PERFORM WORK OUTSIDE OF LOD AS REQUIRED TO MEET INTENT OF PLAN.

SURVEY LEGEND

- YARD INLET-GRATE
- STORM MH
- GRATE INLET (ROUND)
- SAN. SEW. MH
- WATER VALVE
- GRATE INLET
- TRAVERSE
- SIGN
- UTILITY MH
- TELE. MH
- LAMP POST
- ELEC. MH
- ELEC. JUNC. BOX
- UTILITY MH
- BOLLARD
- SIAMESE CONNECTION
- MONITORING WELL
- FIRE HYDRANT
- HC SYMBOL
- STEAM MANHOLE
- CLEAN OUT
- STUMP
- LIGHT POLE
- FENCE (WOOD)
- DATR — DATA ACCORDING TO RECORDS
- U.D. — UTILITY DESIGNATING
- W — WATERLINE
- COMM — COMM. LINE
- UGT — TELEPHONE LINE
- UGE — ELECTRIC
- G — GAS LINE
- UNKNOWN UTILITY
- BENCHMARK

SITE WORK LEGEND

- BLDG
- CONCRETE CURB AND GUTTER
- CONCRETE CURB AND SPILL GUTTER
- LIGHT DUTY ASPHALT PAVEMENT
- HEAVY DUTY ASPHALT PAVEMENT
- LIGHT DUTY CONCRETE PAVEMENT
- EDGE MILL AND OVERLAY
- SIDEWALK
- CONCRETE PAVERS
- TREES
- SHRUBS
- X — FENCE
- LIMIT OF DISTURBANCE
- SIGN
- BOLLARD
- WETLANDS
- CONTROL POINT
- S — SANITARY LINE
- STORM LINE
- W — WATER LINE
- CWS — CHILLED WATER SUPPLY
- CWR — CHILLED WATER RETURN
- G — GAS LINE
- COMM — COMMUNICATIONS DUCT BANK
- UGE — ELECTRIC DUCT BANK
- ST — STEAM SUPPLY LINE
- MANHOLE
- CO — CLEANOUT
- CURB INLET/GRATE INLET/DROP INLET
- ENDWALL/HEADWALL
- ADJUST INLET TO GRADE
- ADJUST MANHOLE TO GRADE
- CULVERT
- FLARED END SECTION
- FH1 — FIRE HYDRANT W/ NUMBER
- WV — WATER VALVE
- GV — GAS VALVE
- PIV — POST INDICATOR VALVE
- LIGHT POLE
- UTILITY POLE
- FFE=220.0 — FINISH FLOOR ELEVATION
- 220.0 — SPOT ELEVATIONS
- 220 — ELEVATION CONTOUR
- DEMOLITION AND REMOVAL BUILDING
- DEMOLITION AND REMOVAL CONC PVMT
- DEMOLITION AND REMOVAL ASPHALT PVMT
- DEMOLITION AND REMOVAL LINEAR FEATURE
- REMOVE EXST STRUC OR TREE
- CENTER OR BASELINE
- DECIDUOUS SHADE TREE
- DECIDUOUS ORNAMENTAL TREE
- EVERGREEN TREE
- LARGE SHRUBS, EVERGREEN
- LARGE SHRUBS, DECIDUOUS
- GROUND COVER
- D / 10 — STORM DRAIN STRUCTURE
- S / 1 — SANITARY SEWER STRUCTURE
- TEST PIT
- SOIL BORING

100% SUBMITTAL

AECOM

AECOM TECHNICAL SERVICES, INC.
3101 WILSON BOULEVARD
SUITE 900
ARLINGTON, VA 22201

T: 703-682-4900 F: 703.682.4901
www.aecom.com

SEAL AREA

STATE OF MARYLAND — ERIC P. EUCH — No. 26... — PROFESSIONAL ENGINEER
10/12/2012

KEY PLAN

REV	DATE	DESCRIPTION	S&R BR.	CUSTOMER	PM	SECT. HEAD

	INITIALS	DATE
DRAWN BY	MLF	06/16/11
CHECKED BY	FM	
A-E MANAGER	EW	
ENVIRONMENTAL BRANCH	JH	
SAFETY BRANCH	CS	
CM	MMD	
PM	RWP	
CUSTOMER	JWB	
ENG. BRANCH	DGL	

GENERAL CIVIL NOTES & LEGENDS

C-001

FLIGHT PROJECTS BUILDING

NATIONAL AERONAUTICS AND SPACE ADMINISTRATION

GODDARD SPACE FLIGHT CENTER GREENBELT, MARYLAND
FACILITIES MANAGEMENT DIVISION

DATE ISSUED	CoF CODE OR WR#	AECOM PROJECT NO.	SCALE
10/12/2012	12GXAZ	60187636	

File Location: M:\WATER\60190712 GODDARD SPACE FLIGHT CENTER\0001\CADD\DWG\60712C_001.DWG
Plotted By: FRAZIER, MICHELLE; Plot Date: Wednesday, October 10, 2012; Plot CTB File: ----; Page Setup Name: ----; InsUnits: 1; LTScale: 1.00 Measurement: 0;
FILE DATE: 10/10/2012 1:50:08 PM

TRAVERSE

POINT	NORTHING	EASTING	ELEV	DESCRIPTION
100	483601.865	1355541.737	194.31	REBAR AND CAP
101	483891.950	1355444.787	194.36	REBAR AND CAP
102	483888.678	1355075.467	187.82	REBAR AND CAP
103	483727.003	1355280.859	190.15	REBAR AND CAP
104	483411.361	1355056.740	180.32	REBAR AND CAP
105	483356.845	1355555.969	191.82	REBAR AND CAP
106	483833.804	1355690.985	210.63	REBAR AND CAP
107	484159.233	1355582.731	212.89	REBAR AND CAP

BENCHMARKS

BM	ELEVATION	DESCRIPTION
1	193.64	SQUARE CUT ON LIGHT POLE BASE
2	193.36	SQUARE CUT ON CORNER OF LOADING DOCK

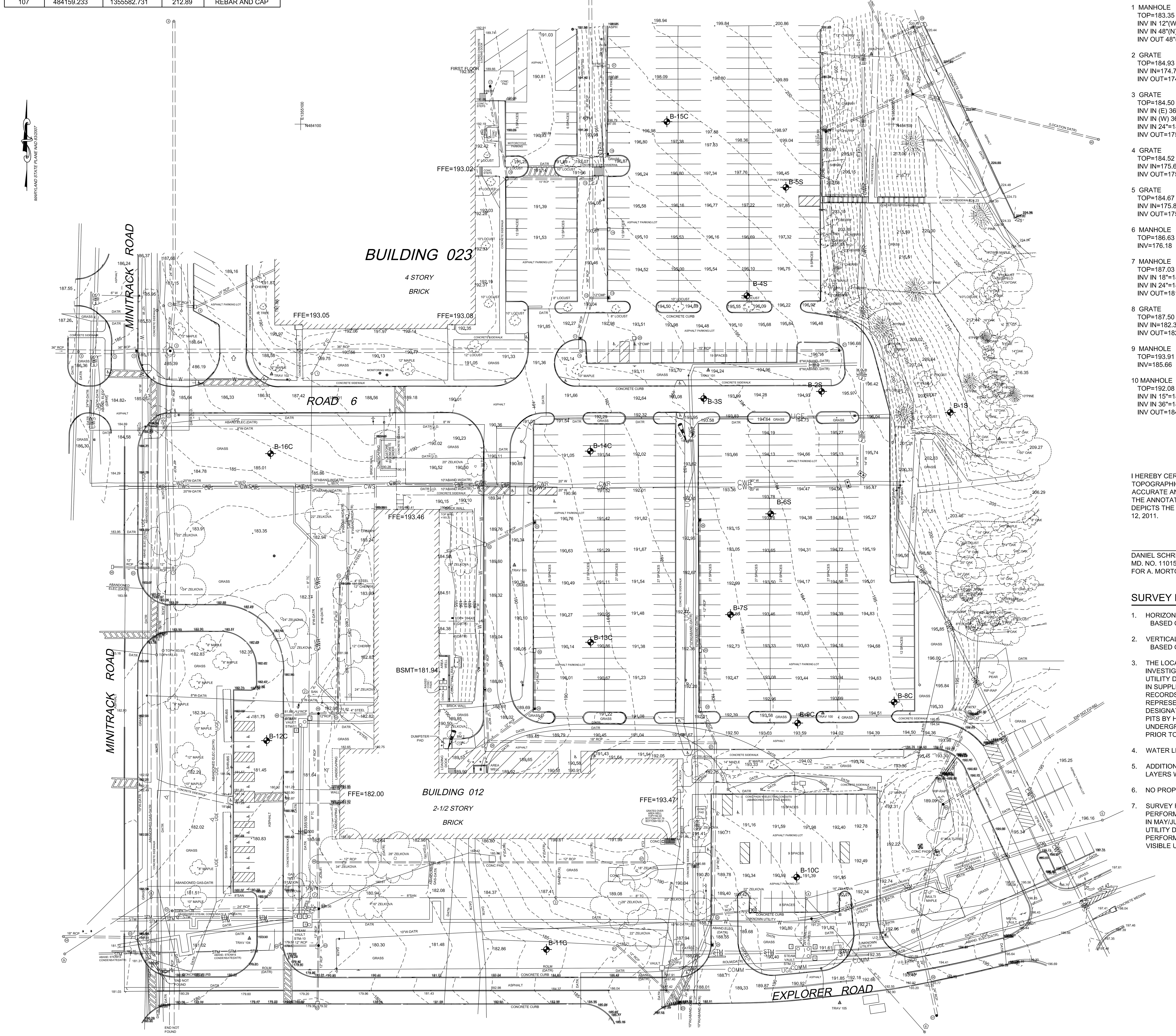

NOTES THIS SHEET:

1. THIS SHEET PROVIDED FOR REFERENCE ONLY. SURVEY INFORMATION FROM TOPOGRAPHIC SURVEY TITLED "GODDARD SPACE FLIGHT CENTER", DATED MARCH, 2011, AND SUPPLEMENTAL SURVEY ADDED JUNE 2, 2011, PROVIDED BY A. MORTON THOMAS AND ASSOCIATES, INC., CONSULTING ENGINEERS, 12750 TWINBROOK PARKWAY, ROCKVILLE, MD (AMT FILE NO 110-704.001).
2. SEE SHEET C001 FOR GENERAL CIVIL NOTES & LEGENDS, SURVEY LEGEND, TRAVERSE, AND BENCHMARK COORDINATES.

STORM DRAIN CHART

SHOWN ON DRAWING AS 1 ◯

1 MANHOLE
TOP=183.35
INV IN 12"(W)=175.30
INV IN 48"(N)=174.05
INV OUT 48"(S)=173.25

2 GRATE
TOP=184.93
INV IN=174.73
INV OUT=174.68

3 GRATE
TOP=184.50
INV IN (E) 36"=175.60
INV IN (W) 36"=175.60
INV IN 24"=180.45
INV OUT=175.45

4 GRATE
TOP=184.52
INV IN=175.62
INV OUT=175.62

5 GRATE
TOP=184.67
INV IN=175.87
INV OUT=175.77

6 MANHOLE
TOP=186.63
INV=176.18

7 MANHOLE
TOP=187.03
INV IN 18"=182.03
INV IN 24"=181.63
INV OUT=181.43

8 GRATE
TOP=187.50
INV IN=182.30
INV OUT=182.20

9 MANHOLE
TOP=193.91
INV=185.66

10 MANHOLE
TOP=192.08
INV IN 15"=184.33
INV IN 36"=184.28
INV OUT=184.08

11 GRATE
TOP=192.17
INV IN=184.70
INV OUT=184.65

12 MANHOLE
TOP=193.49
INV IN 12"=184.99
INV IN 36"=184.84
INV OUT=184.79

13 GRATE
TOP=193.20
INV=185.10

14 GRATE
TOP=194.40
INV=186.20

15 MANHOLE
TOP=192.15
INV IN 15"=185.90
INV IN 30"=188.05
INV OUT=185.65

16 GRATE
TOP=190.67
INV IN 185.17
INV OUT=185.10

17 MANHOLE
TOP=189.86
INV=186.66

18 GRATE
NOT FOUND IN FIELD
LOCATION(DATR)

19 MANHOLE
TOP=201.02
INV=190.79

20 GRATE
TOP=192.90
INV=186.20

21 GRATE
TOP=195.74
INV IN=190.52
INV OUT=190.39

22 GRATE
TOP=199.17
INV IN 15"=194.67'
INV OUT=194.57

23 GRATE
TOP=187.29
INV IN 12"=180.89
INV IN 24"=174.29

24 GRATE
TOP=187.80
INV=175.09

25 MANHOLE
TOP=188.49
INV IN 12"=182.47
INV IN 24"=174.39
INV OUT=174.39

26 GRATE
TOP=198.65
INV=183.65

27 MANHOLE
TOP=192.41
INV IN 12"=183.31
INV IN 18"=175.90
INV OUT=175.56

28 MANHOLE
TOP=189.16
a INV IN=183.00
b INV IN=177.00
c INV IN=184.06
d INV IN=178.86
e NOT FOUND
INV OUT=176.11

29 GRATE
TOP=188.98
INV IN=181.88
INV OUT=181.48

30 GRATE
TOP=189.40
INV=182.50

31 GRATE
TOP=188.60
INV IN178.30
INV OUT=178.20

32 GRATE
TOP=189.10
INV IN 4"=
INV IN 6"=181.00
INV IN12"=183.80
INV OUT=178.90

33 GRATE
TOP=189.72
INV=184.42

34 GRATE
TOP=191.44
INV IN=184.89
INV OUT=184.72

35 GRATE
TOP=191.85
INV IN=186.95
INV OUT=186.25

36 GRATE
TOP=192.52
INV=188.37

37 GRATE
TOP=197.31
INV OUT 15"=190.41

38 GRATE
TOP=219.23
INV IN 15"=213.28
INV IN 12"=215.08
INV IN - PLUGGED
INV OUT=199.23

39 GRATE
TOP=220.16
INV OUT=216.41

40 MANHOLE
LOCATION DATR-
COULD NOT OPEN

41 MANHOLE
TOP=185.53
INV OUT=180.88

42 GRATE
TOP=178.91
INV=175.91

43 MANHOLE
TOP=178.88
INV IN 12"(W)=175.03
INV IN 12"(S)=175.08
INV OUT=174.98

44 GRATE
TOP=178.94
INV=175.94

45 GRATE
TOP=178.95
INV IN 12"(S)=174.70
INV IN 18"(N)=172.60
INV OUT 24"=172.55

46 MANHOLE
TOP=180.62
INV IN 12"(E)=175.37
INV IN 12"(N)=173.57
INV OUT 18"=173.32

47 MANHOLE
TOP=190.13
INV IN 4"=186.13
INV OUT 12"=180.30

48 GRATE
TOP=181.04
INV IN 12"(W)=177.09
INV IN 12"(E)=176.94
INV OUT 12"=174.94

49 GRATE
TOP=181.27
INV=177.27

50 MANHOLE
TOP=181.79
INV IN 4"(E)=177.64
INV IN 4"(SE)=177.64
INV IN 12"(N)=177.29
INV OUT 12"=177.24

51 MANHOLE
TOP=181.90
INV IN 4"(NE)=177.80
INV IN 4"(E)=177.80
INV OUT 12"=177.70

52 MANHOLE
TOP=181.73
INV IN 24"(E)=172.13
INV IN 24"(SW)=169.63
INV IN 48"(N)=171.78
INV OUT 48"=169.68

53 GRATE
TOP=180.82
INV IN 18"(W)=172.92
INV IN 18"(SE)=173.07
INV OUT 24"=172.97

54 MANHOLE
TOP=181.03
INV OUT=173.23

55 GRATE
TOP=183.35
INV IN 12"(W)=176.60
INV OUT 12"=176.50

56 GRATE
TOP=183.41
INV=177.46

57 GRATE
TOP=191.62
INV IN 24"=178.42

58 GRATE
TOP=193.25
INV IN 24"(N)=179.85
INV OUT 24"(S)=179.75

59 MANHOLE
TOP=193.20
INV IN 24"(N)=179.90
INV OUT 24"(S)=179.80

60 STORM WATER RETENTION STRUCTURE
TOP=192.04
WEIR ELEV=191.14
INV IN 2"=188.44
INV IN 15"=181.54
INV OUT 24"=180.64

61 HEADWALL
TOP=191.30
INV OUT=189.24

62 HEADWALL
TOP=192.64
INV IN=190.29

I HEREBY CERTIFY THAT TO THE BEST OF MY KNOWLEDGE AND BELIEF THIS TOPOGRAPHIC SURVEY PREPARED BY A. MORTON THOMAS AND ASSOCIATES, INC. IS ACCURATE AND CORRECT; THAT IT WAS PREPARED IN SUBSTANTIAL COMPLIANCE WITH THE ANNOTATED CODE OF MARYLAND (COMAR 09.13.06); AND THAT IT ACCURATELY DEPICTS THE EXISTING CONDITIONS, INCLUDING ON SITE IMPROVEMENTS, AS OF MAY 12, 2011.

DANIEL SCHRIEVER, PROFESSIONAL LAND SURVEYOR DATE:
MD. NO. 11015
FOR A. MORTON THOMAS AND ASSOCIATES, INC.

SEWER CHART

SHOWN ON DRAWING AS 1 ⬠

1 TOP=188.19
INV IN=176.49
INV OUT=176.34

2 TOP=181.99
INV IN 8"(N)=172.69
INV IN 6"(E)=172.64
INV OUT=172.09

3 TOP=188.13
INV CEN=173.10

4 TOP=191.22
TOP 1.5"=188.1
TOP 1.5"=187.4
INV IN 4"=187.97
INV IN 6"=181.12
INV IN 8"=180.90
INV OUT=180.82

5 TOP=196.65
INV=186.05

6 TOP=193.30
INV=186.20

7 TOP=179.69
TOP 1.5"=177.67
INV IN 4"CI=177.67
INV IN 6"PVC(S)=171.74
INV IN 8"(N)=170.74
INV IN 8"(E)=170.74
INV OUT 8"(W)=170.69

8 TOP=181.91
INV IN(E)=170.11
INV OUT(SW)=170.06

9 TOP=181.45
INV IN=169.70

STEAM VAULT INFOMATION

SHOWN ON DRAWING AS 1 ☐

STEAM VAULT STM-11*
1 MANHOLE TOP=182.39
2 MANHOLE TOP=182.07
NOTE: LOCATION AND MANHOLE ELEVATIONS SHOWN ARE BASED ON FIELD DATA OBTAINED MAY 11, 2011. AS OF JUNE 2, 2011, VAULT HAD BEEN DEMOLISHED AND NEW STEAM LINES WERE IN THE PROCESS OF BEING INSTALLED FROM THE BUILDING.

STEAM VAULT STM-10*
1 MANHOLE TOP=180.86
BOTTOM OF VAULT=170.04
BOTTOM OF SUMP=168.46
TOP OF STEAM PIPE(E)=172.5
2 MANHOLE TOP=180.84
BOTTOM OF VAULT=170.14
TOP OF STEAM PIPE(W)=172.6
3 MANHOLE TOP=180.84
BOTTOM OF VAULT=170.14
TOP OF CONDENSATE PIPE=172.1

STEAM VAULT STM-12*
1 MANHOLE TOP=192.74
BOTTOM OF VAULT=182.32
TOP OF STEAM PIPE(W)=185.6
2 MANHOLE TOP=182.46
BOTTOM OF VAULT=182.46
BOTTOM OF SUMP=181.16
TOP OF STEAM PIPE UPPER(E)=188.0
TOP OF STEAM PIPE LOWER=185.6
3 MANHOLE TOP=192.77
BOTTOM OF VAULT=182.52
TOP OF CONDENSATE PIPE UPPER(E)=187.3
TOP OF CONDENSATE PIPE LOWER=184.9
(PIPES AT EAST SIDE OF VAULT TAKE A 90° "S" BEND DOWNWARD BEFORE REACHING WEST SIDE OF VAULT)

* VAULT NUMBER DESIGNATIONS COME FROM FACILITY UITILITY PLAN.

SURVEY NOTES:

1. HORIZONTAL DATUM:
   BASED ON MARYLAND STATE PLANE DATUM. (NAD 83/2007)
2. VERTICAL DATUM:
   BASED ON NAVD 1988
3. THE LOCATION OF UTILITIES AND VAULTS SHOWN HEREON ARE FROM FIELD INVESTIGATION, VISIBLE FIELD EVIDENCE, AVAILABLE RECORDS AND QUALITY LEVEL B UTILITY DESIGNATING AND CANNOT BE GUARANTEED. UNDERGROUND UTILITIES SHOWN IN SUPPLEMENTAL AREAS SURVEYED IN MAY, 2011 ARE SHOWN BASED ON AVAILABLE RECORDS AND NOT BASED ON UTILITY DESIGNATING. AREAS MARKED "DATR" REPRESENT UTILITIES BASED UPON DATA ACCORDING TO RECORDS. LIMITS OF UTILITY DESIGNATION HAVE BEEN MARKED "U.D." CONTRACTOR/ENGINEERS SHOULD DIG TEST PITS BY HAND AT ALL UTILITY CROSSINGS TO VERIFY EXACT LOCATION. FOR MARKING OF UNDERGROUND UTILITY LINES, CALL MISS UTILITY AT 1-800-257-7777 AT LEAST 48-HOURS PRIOR TO EXCAVATION OR CONSTRUCTION.
4. WATER LINE SIZES ARE SHOWN BASED ON AVAILABLE RECORDS.
5. ADDITIONAL SPOT ELEVATIONS ARE ON HIDDEN/FROZEN AND THE "ALLPOINTS" LAYERS WITHIN THE ELECTRONIC FILE
6. NO PROPERTY SHOWN HEREON.
7. SURVEY REPRESENTS A COMPILATION OF FIELD SURVEY EFFORT ORIGINALLY PERFORMED IN MARCH, 2011 AND ADDITIONAL FIELD SURVEY EFFORT PERFORMED IN MAY/JUNE, 2011. NOTE THAT UTILITIES SHOWN IN ORIGINAL SURVEY INCLUDED UTILITY DESIGNATION. UTILITIES SHOWN IN SUPPLEMENTAL TOPOGRAPHIC SURVEY PERFORMED IN MAY/JUNE, 2011 ARE BASED ON AVAILABLE UTILITY RECORDS AND VISIBLE UTILITY FEATURES.

40' 20' 0 40' 80'
1"=40'

100% SUBMITTAL

SHEET INCLUDED FOR REFERENCE ONLY ! ! !

EXISTING CONDITIONS PLAN

SCALE: 1" = 40'

AECOM

AECOM TECHNICAL SERVICES, INC.
3101 WILSON BOULEVARD
SUITE 900
ARLINGTON, VA 22201
T: 703-682-4900 F: 703.682.4901
www.aecom.com

SEAL AREA

STATE OF MARYLAND ERIC P. BUCK No. 26212 REGISTERED PROFESSIONAL ENGINEER 10/12/2012

KEY PLAN

REV	DATE	DESCRIPTION	S&R BR.	CUSTOMER	PM	SECT. HEAD

	INITIALS	DATE
DRAWN BY	MLF	06/16/11
CHECKED BY	FM	
A-E MANAGER	EW	
ENVIRONMENTAL BRANCH	JH	
SAFETY BRANCH	CS	
CM	MMD	
PM	RWP	
CUSTOMER	JWB	
ENG. BRANCH	DGL	

EXISTING CONDITIONS PLAN

C-101

FLIGHT PROJECTS BUILDING

NATIONAL AERONAUTICS AND SPACE ADMINISTRATION
GODDARD SPACE FLIGHT CENTER GREENBELT, MARYLAND
FACILITIES MANAGEMENT DIVISION

DATE ISSUED	CoF CODE OR WR#	AECOM PROJECT NO.	SCALE
10/12/2012	12GXAZ	60187636	

FILE DATE: 10/10/2012 1:50:43 PM

File Location: M:\WATER\60190712 GODDARD SPACE FLIGHT CENTER\0001\CADD\DWG\90712C_101.DWG
Plotted By: FRAZIER, MICHELLE; Plot Date: Wednesday, October 10, 2012; Plot CTB File: ----; Page Setup Name: ----; InsUnits: 2; LTScale: 1.00 Measurement: 0;

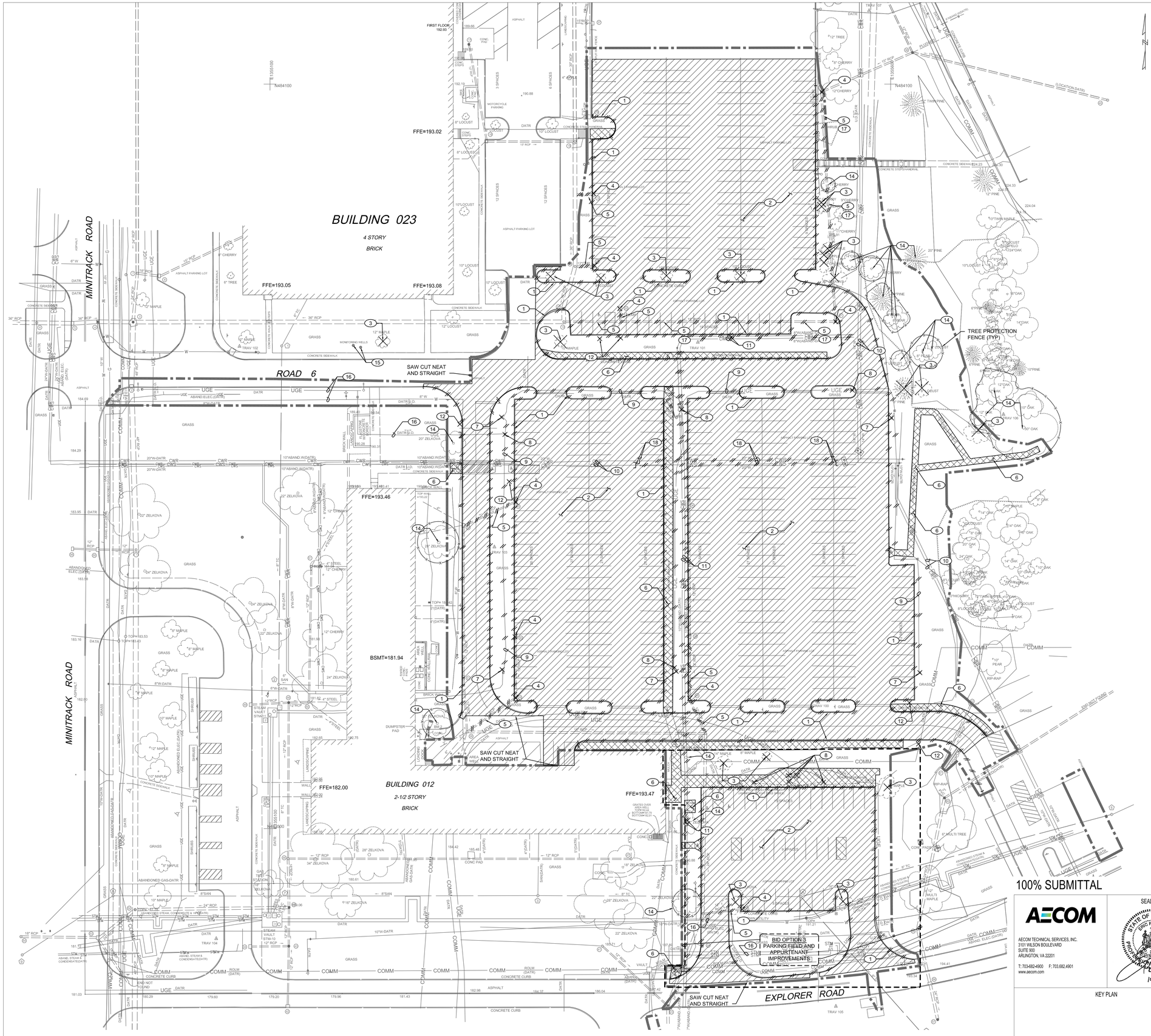

DEMOLITION PLAN

SCALE: 1" = 30'

NOTES THIS SHEET:

1. SEE SHEET C001 FOR GENERAL CIVIL NOTES & LEGENDS.
2. WHEN DEMOLITION OF DRAINAGE SYSTEMS THAT CONVEY RUNOFF FROM UP-GRADIENT AREAS IS PERFORMED, PERMANENT OR TEMPORARY PIPING SHALL BE INSTALLED TO MAINTAIN CONVEYANCE OF CLEAN RUNOFF AROUND CONSTRUCTION AREAS.
3. CONTRACTOR SHALL VERIFY LIMITS AND QUANTITIES IN THE FIELD AND SHALL BE RESPONSIBLE FOR ALL DEMOLITION NECESSARY TO INSTALL PROPOSED IMPROVEMENTS IN ACCORDANCE WITH PLANS AND SPECIFICATIONS.
4. IF BID OPTION 3 IS NOT AWARDED, NO DEMOLITION SHALL BE PERFORMED WITHIN THE BID OPTION WORK ZONE EXCEPT FOR THE FOLLOWING:

   4.1. DEMOLITION AND REPLACEMENT OF FEATURES AS REQUIRED FOR BUILDING UTILITY SERVICE INSTALLATIONS.

DEMOLITION NOTES:

1. REMOVE EXISTING CURB & GUTTER TO LIMITS SHOWN.
2. REMOVE EXISTING ASPHALT PAVEMENT.
3. REMOVE EXISTING TREE. DISPOSE OF AS DIRECTED.
4. REMOVE EXISTING STORM DRAIN STRUCTURE INCLUDING ASSOCIATED GRATES, COVERS, AND PIPES. DISPOSE OF AS DIRECTED.
5. REMOVE EXISTING STORM DRAIN PIPING. BRICK SHUT OPENING IN STRUCTURE TO REMAIN.
6. REMOVE EXISTING CONCRETE SIDEWALK TO LIMITS SHOWN.
7. REMOVE EXISTING LIGHT FIXTURE AND ASSOCIATED WIRING.
8. REMOVE EXISTING ELECTRICAL JUNCTION/PULL BOX.
9. REMOVE EXISTING ELECTRICAL CONDUIT/DIRECT BURIAL CABLE.
10. EXISTING CHILLED WATER LINES TO REMAIN. PROTECT IN PLACE.
11. REMOVE EXISTING ABANDONED CHILLED WATER LINES TO LIMITS SHOWN.
12. REMOVE EXISTING PARKING OR STREET SIGN.
13. NOT USED.
14. ALL EXISTING TREES TO REMAIN SHALL BE PROTECTED IN PLACE TO INSURE POSITIVE GROWTH AFTER PROJECT COMPLETION.
15. MAINTAIN AND PROTECT ALL MONITORING WELLS. IF PROPOSED WORK REQUIRES REMOVAL, GSFC PROJECT MANAGER MUST BE NOTIFIED PRIOR TO RELOCATION.
16. MAINTAIN AND PROTECT ALL EXISTING UTILITIES. ALL UTILITIES SHALL REMAIN FULLY OPERATIONAL DURING CONSTRUCTION AT ALL TIMES.
17. STORM DRAIN REQUIRES REALIGNMENT (SEE SHEET NOTE 2).
18. REMOVE EXISTING CHILLED WATER LINES TO EXTENT SHOWN.

1"=30' 30' 15' 0 30' 60'

100% SUBMITTAL

AECOM
AECOM TECHNICAL SERVICES, INC.
3101 WILSON BOULEVARD
SUITE 900
ARLINGTON, VA 22201
T: 703-682-4900 F: 703.682.4901
www.aecom.com

SEAL AREA

STATE OF MARYLAND ERIC P. LUCAS 29374 PROFESSIONAL ENGINEER
10/12/2012

KEY PLAN

REV	DATE	DESCRIPTION	S&R BR.	CUSTOMER	PM	SECT. HEAD

	INITIALS	DATE
DRAWN BY	MLF	06/16/11
CHECKED BY	FM	
A-E MANAGER	EW	
ENVIRONMENTAL BRANCH	JH	
SAFETY BRANCH	CS	
CM	MMD	
PM	RWP	
CUSTOMER	JWB	
ENG. BRANCH	DGL	

DEMOLITION PLAN

C-102

FLIGHT PROJECTS BUILDING

NATIONAL AERONAUTICS AND SPACE ADMINISTRATION

GODDARD SPACE FLIGHT CENTER GREENBELT, MARYLAND
FACILITIES MANAGEMENT DIVISION

DATE ISSUED	CoF CODE OR WR#	AECOM PROJECT NO.	SCALE
10/12/2012	12GXAZ	60187636	

FILE DATE: 10/10/2012 1:51:03 PM

File Location: M:\WATER\60190712 GODDARD SPACE FLIGHT CENTER\0001\CADD\DWG\90712C_-102.DWG
Plotted By: FRAZIER, MICHELLE; Plot Date: Wednesday, October 10, 2012; Plot CTB File: ----; Page Setup Name: ----; InsUnits: 2; LTScale: 1.00 Measurement: 0;

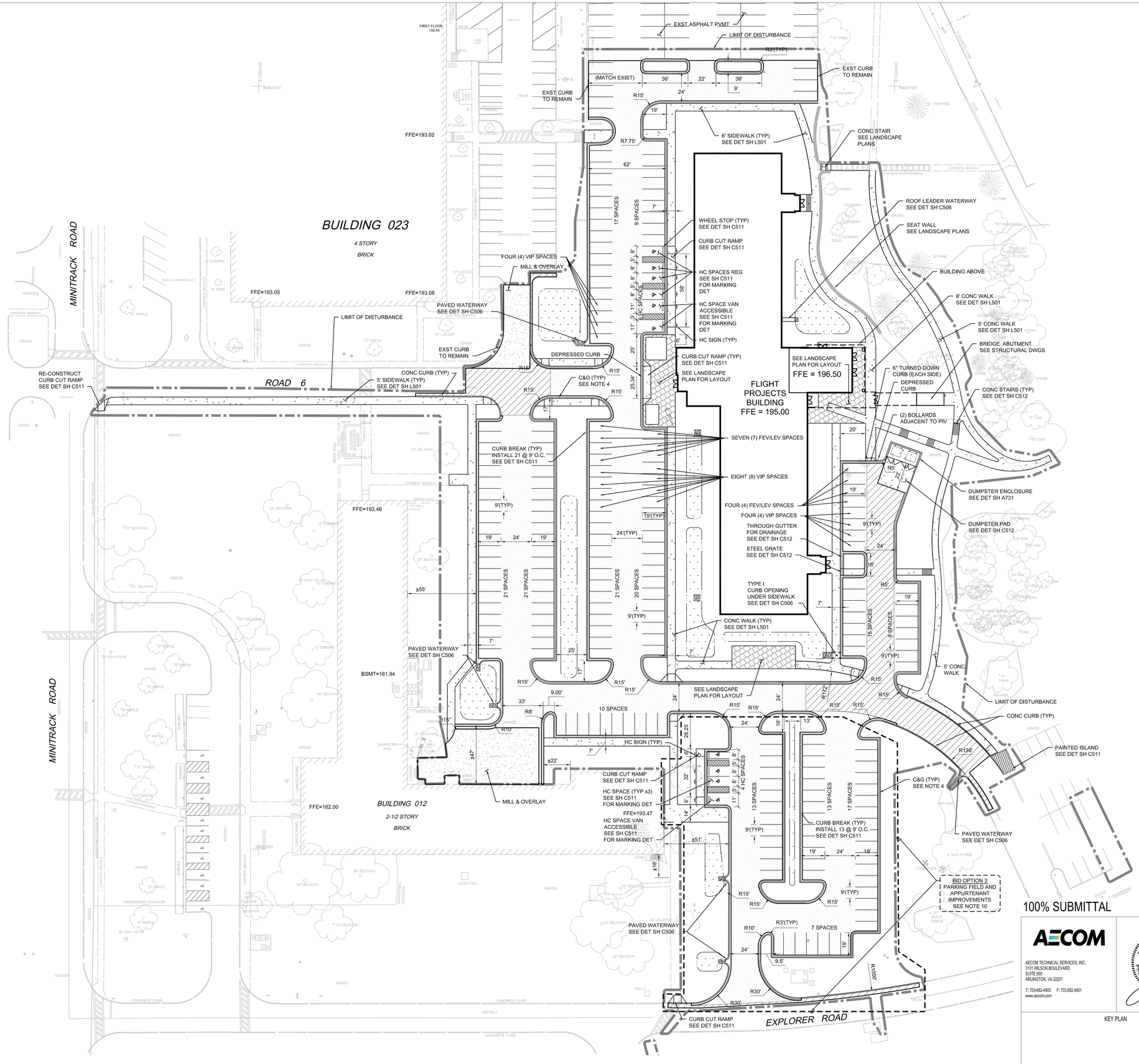

PAVEMENT LEGEND

- CONCRETE CURB AND GUTTER
- CONCRETE CURB AND SPILL GUTTER
- LIGHT DUTY ASPHALT PAVEMENT
- HEAVY DUTY ASPHALT PAVEMENT
- 1-1/2" MILL AND OVERLAY
- SIDEWALK

NOTES THIS SHEET:

1. SEE SHEET C001 FOR GENERAL CIVIL NOTES & LEGENDS.
2. SEE SHEET C101 FOR EXISTING CONDITIONS PLAN.
3. SEE SHEET C102 FOR DEMOLITION PLAN.
4. SEE SHEET C403 FOR ENLARGED PLAN OF SERVICE AREA.
5. ALL CURB & GUTTER SHALL BE PRINCE GEORGE'S COUNTY STANDARD CURB & GUTTER. SEE DETAIL SHEET C512.
6. SEE SHEET C511-C512 FOR SITE DETAILS.
7. ALL CURB RADII TO BE 3' EXCEPT AS NOTED.
8. ALL CONCRETE WALKS TO BE 6' WIDE EXCEPT AS NOTED. SEE LANDSCAPE PLANS FOR ADDITIONAL SIDEWALK DIMENSIONS AND MATERIAL REQUIREMENTS.
9. ALL SPILL GUTTERS TO HAVE 20' TRANSITION TO REGULAR GUTTER.
10. IF BID OPTION 3 IS NOT AWARDED, NO SITEWORK SHALL BE PERFORMED WITHIN THE BID OPTION WORK ZONE EXCEPT FOR THE FOLLOWING:

    CONSTRUCT CURB & GUTTER SECTION STRAIGHT ACROSS THE TWO (2) ENTRANCES ON THE NORTH SIDE OF THE WORK ZONE (PARKING AREA).

LAYOUT PLAN

SCALE: 1" = 30'

100% SUBMITTAL

1"=30' 30' 15' 0 30' 60'

AECOM
AECOM TECHNICAL SERVICES, INC.
3101 WILSON BOULEVARD
SUITE 900
ARLINGTON, VA 22201
T: 703-682-4900 F: 703.682.4901
www.aecom.com

SEAL AREA

STATE OF MARYLAND ERIC P. LUCAS 26132 PROFESSIONAL ENGINEER 10/12/2012

KEY PLAN

REV	DATE	DESCRIPTION	S&R BR.	CUSTOMER	PM	SECT. HEAD

	INITIALS	DATE
DRAWN BY	MLF	06/16/11
CHECKED BY	FM	
A-E MANAGER	EW	
ENVIRONMENTAL BRANCH	JH	
SAFETY BRANCH	CS	
CM	MMD	
PM	RWP	
CUSTOMER	JWB	
ENG. BRANCH	DGL	

LAYOUT & PAVING PLAN

C-103

FLIGHT PROJECTS BUILDING

NATIONAL AERONAUTICS AND SPACE ADMINISTRATION

GODDARD SPACE FLIGHT CENTER GREENBELT, MARYLAND
FACILITIES MANAGEMENT DIVISION

DATE ISSUED	CoF CODE OR WR#	AECOM PROJECT NO.	SCALE
10/12/2012	12GXAZ	60187636	

FILE DATE: 10/10/2012 1:51:27 PM

File Location: M:\WATER\60190712 GODDARD SPACE FLIGHT CENTER\0001\CADD\DWG\90712C_103.DWG Page Setup Name: ----; Insl/Units: 2; LTScale: 1.00 Measurement: 0;
Plotted By: FRAZER, MICHELLE; Plot Date: Wednesday, October 10, 2012; Plot CTB File: ----;

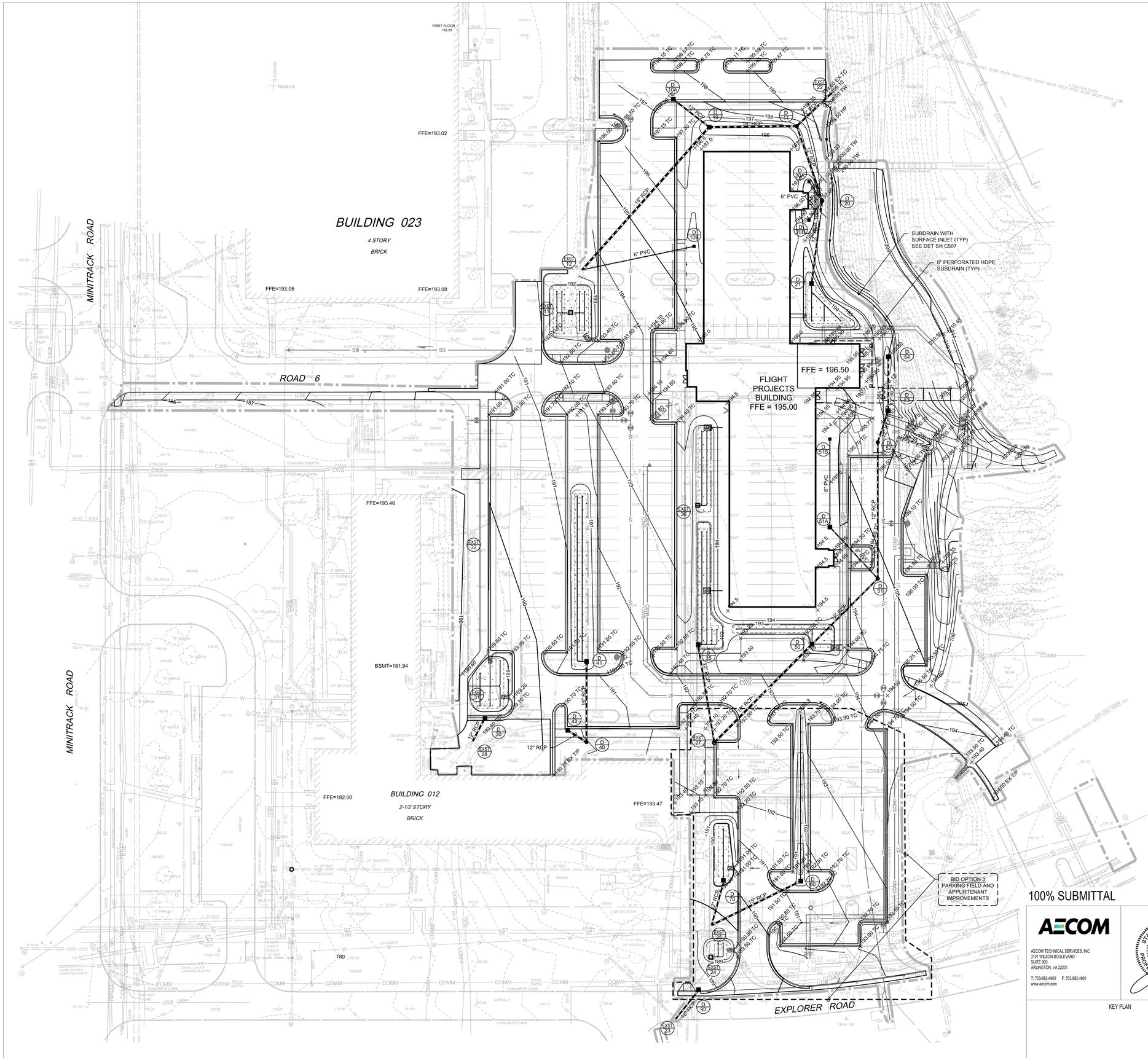

NOTES THIS SHEET:

1. SEE SHEET C001 FOR GENERAL NOTES, LEGENDS & SURVEY CONTROL INFORMATION.
2. SEE SHEETS C401-C402 FOR SWM MANAGEMENT ENLARGED PLANS.
3. SEE SHEET C601 FOR STORM DRAIN SCHEDULES AND STAKE OUT DATA.
4. SEE SHEET C201 FOR STORM DRAIN PROFILES.
5. SEE SHEETS C508-C509 FOR STORM WATER MANAGEMENT DETAILS.
4. IF BID OPTION 3 IS NOT AWARDED, NO GRADING SHALL BE PERFORMED WITHIN THE BID OPTION WORK ZONE EXCEPT FOR THE FOLLOWING:

   TYING TO ADJACENT GRADES AND RESTORATION OF GRADES AS REQUIRED FOR DRAINAGE SYSTEM CONNECTION AT STRUCTURE EX-27, AND BUILDING UTILITY SERVICE INSTALLATIONS.

GRADING & DRAINAGE PLAN

SCALE: 1" = 30'

1"=30' 30' 15' 0 30' 60'

100% SUBMITTAL

AECOM
AECOM TECHNICAL SERVICES, INC.
3101 WILSON BOULEVARD
SUITE 900
ARLINGTON, VA 22201
T: 703-682-4900 F: 703.682.4901
www.aecom.com

SEAL AREA

STATE OF MARYLAND — REGISTERED PROFESSIONAL ENGINEER — 28123 — 10/12/2012

KEY PLAN

REV	DATE	DESCRIPTION	S&R BR.	CUSTOMER	PM	SECT. HEAD

	INITIALS	DATE
DRAWN BY	MLF	06/16/11
CHECKED BY	FM	
A-E MANAGER	EW	
ENVIRONMENTAL BRANCH	JH	
SAFETY BRANCH	CS	
CM	MMD	
PM	RWP	
CUSTOMER	JWB	
ENG. BRANCH	DGL	

GRADING & DRAINAGE PLAN

C-104

FLIGHT PROJECTS BUILDING

NATIONAL AERONAUTICS AND SPACE ADMINISTRATION

GODDARD SPACE FLIGHT CENTER GREENBELT, MARYLAND
FACILITIES MANAGEMENT DIVISION

DATE ISSUED	CoF CODE OR WR#	AECOM PROJECT NO.	SCALE
10/12/2012	12GXAZ	60187636	

FILE DATE: 10/10/2012 1:51:58 PM

File Location: M:\WATER\60190712 GODDARD SPACE FLIGHT CENTER\000\1\CADD\DWG\957126_194.DWG
Plotted By: FRAZIER, MICHELLE; Plot Date: Wednesday, October 10, 2012; Plot CTB File: ----; Page Setup Name: ----; InsUnits: 2; LTScale: 1.00 Measurement: 0;

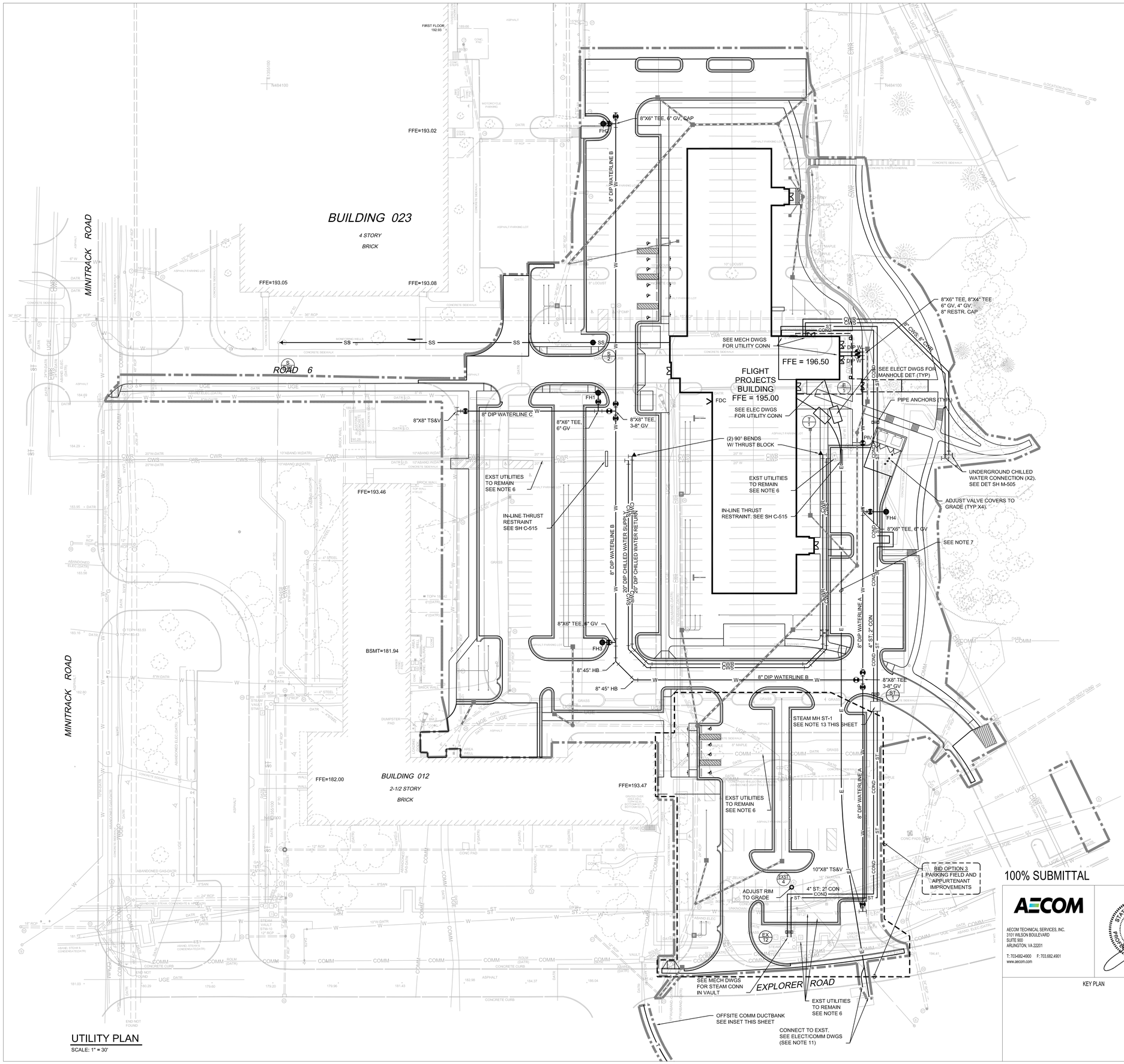

UTILITY PLAN

SCALE: 1" = 30'

NOTES THIS SHEET:

1. SEE SHEET C001 FOR GENERAL CIVIL NOTES, LEGENDS & SURVEY CONTROL INFORMATION.
2. SEE SHEETS C202-C203 FOR UTILITY PROFILES.
3. SEE SHEET C403 FOR ENLARGED PLAN OF SERVICE AREA UTILITY LAYOUT.
4. SEE SHEETS C506 - C507 FOR UTILITY DETAILS.
5. SEE SHEET C601 FOR UTILITY STRUCTURE SCHEDULES & STAKE OUT DATA.
6. IMPACTS MAY OCCUR FROM NEW CONSTRUCTION OVER EXISTING UTILITIES. CONTRACTOR SHALL PROTECT IN PLACE OR REPLACE AS DIRECTED BY OWNER.
7. SEE ELECTRICAL DWG ES-101 FOR SIZE AND ARRANGEMENTS OF DUCT BANKS AND ADDITIONAL SITE ELECTRICAL INFORMATION.
8. CONTRACTOR SHALL LOCATE EXISTING UTILITIES, BOTH HORIZONTALLY AND VERTICALLY, IN AREAS INDICATED AND PROVIDE INFORMATION TO OWNER FOR EVALUATION (SEE NOTE 6).
9. CONTRACTOR SHALL FIELD VERIFY THE EXISTING CONDITIONS AT THE POINT OF CONNECTION PRIOR TO ORDERING ANY MATERIALS AND SHALL NOTIFY OWNER IMMEDIATELY OF ANY CONDITIONS THAT REQUIRE MODIFICATIONS TO THE UTILITY DESIGN INDICATED.
10. CONTRACTOR SHALL VERIFY EXISTING CHILLED WATER ARE FULLY RESTRAINED BETWEEN THE IN-LINE THRUST RESTRAINTS AND NEW FITTINGS.
11. THE EXISTING OFFSITE MANHOLES SHOWN ARE TAKEN FROM RECORD INFORMATION AND WERE NOT LOCATED BY FIELD SURVEY. PRIOR TO CONSTRUCTION, CONTRACTOR SHALL FIELD VERIFY THE EXISTING CONDITIONS AND SHALL NOTIFY THE OWNER IMMEDIATELY OF ANY CONDITIONS THAT REQUIRE MODIFICATIONS TO THE UTILITY DESIGN INDICATED.
12. SEE MECHANICAL DRAWINGS FOR PRECAST STEAM PIPING MANHOLE DETAIL.
13. IF BID OPTION 3 IS NOT AWARDED, NO DEMOLITION SHALL BE PERFORMED WITHIN THE BID OPTION WORK ZONE EXCEPT FOR THE FOLLOWING:

    DRAINAGE SYTEM CONNECTION AT STRUCTURE EX-27, AND BUILDING UTILITY SERVICE INSTALLATIONS AS INDICATED.

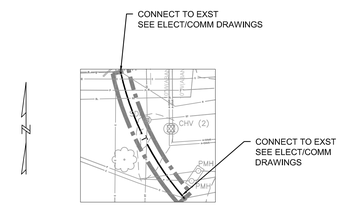

NOTE: EXISTING CONDITIONS SHOWN ABOVE ARE TAKEN FROM RECORD INFORMATION AND WERE NOT LOCATED BY FIELD SURVEY. PRIOR TO CONSTRUCTION, CONTRACTOR SHALL FIELD VERIFY THE EXISTING CONDITIONS AND SHALL NOTIFY THE OWNER IMMEDIATELY OF ANY CONDITIONS THAT REQUIRE MODIFICATIONS TO THE UTILITY DESIGN INDICATED.

OFFSITE COMMUNICATIONS DUCTBANK

SCALE: 1" = 30'

OUTAGE TABLE				
UTILITY	LOCATION	IMPACATED BLDGS	# DAYS	WORK HOURS
CHILLED WATER	20" CHILLED WATER MAIN BETWEEN THE BUILDING 12 AND BUILDING 16 SERVICE TEES.			NORMAL HRS
CHILLED WATER	16" CHILLED WATER MAIN EAST OF THE BUILDING 17 SERVICE TEES.			WEEKEND HRS
HP STEAM	12" HPS MAIN LINE BETWEEN EX STM-12 AND STM-13.			WEEKEND HRS

NOTE: WORK ON STEAM LINE(S) SHALL ONLY BE PERFORMED WHEN THE AMBIENT AIR TEMPERATURE IS ABOVE 40 DEGREES F.

1"=30' 30' 15' 0 30' 60'

100% SUBMITTAL

AECOM
AECOM TECHNICAL SERVICES, INC.
3101 WILSON BOULEVARD
SUITE 900
ARLINGTON, VA 22201
T: 703-682-4900 F: 703.682.4901
www.aecom.com

SEAL AREA

STATE OF MARYLAND ERIC P. LUCAS No. 26324 PROFESSIONAL ENGINEER
10/12/2012

KEY PLAN

REV	DATE	DESCRIPTION		S&R BR.	CUSTOMER	PM	SECT. HEAD

	INITIALS	DATE
DRAWN BY	MLF	06/16/11
CHECKED BY	FM	
A-E MANAGER	EW	
ENVIRONMENTAL BRANCH	JH	
SAFETY BRANCH	CS	
CM	MMD	
PM	RWP	
CUSTOMER	JWB	
ENG. BRANCH	DGL	

UTILITY PLAN

C-105

FLIGHT PROJECTS BUILDING

NATIONAL AERONAUTICS AND SPACE ADMINISTRATION

GODDARD SPACE FLIGHT CENTER GREENBELT, MARYLAND
FACILITIES MANAGEMENT DIVISION

DATE ISSUED	CoF CODE OR WR#	AECOM PROJECT NO.	SCALE
10/12/2012	12GXAZ	60187636	

FILE DATE: 10/10/2012 1:52:44 PM

File Location: M:\WATER\60190712 GODDARD SPACE FLIGHT CENTER\0001\CADD\DWG\90712C_105.DWG Plotted By: FRAZIER, MICHELLE; Plot Date: Wednesday, October 10, 2012; Plot CTB File: ----; Page Setup Name: ----; InsUnits: 2; LTScale: 1.00 Measurement: 0;

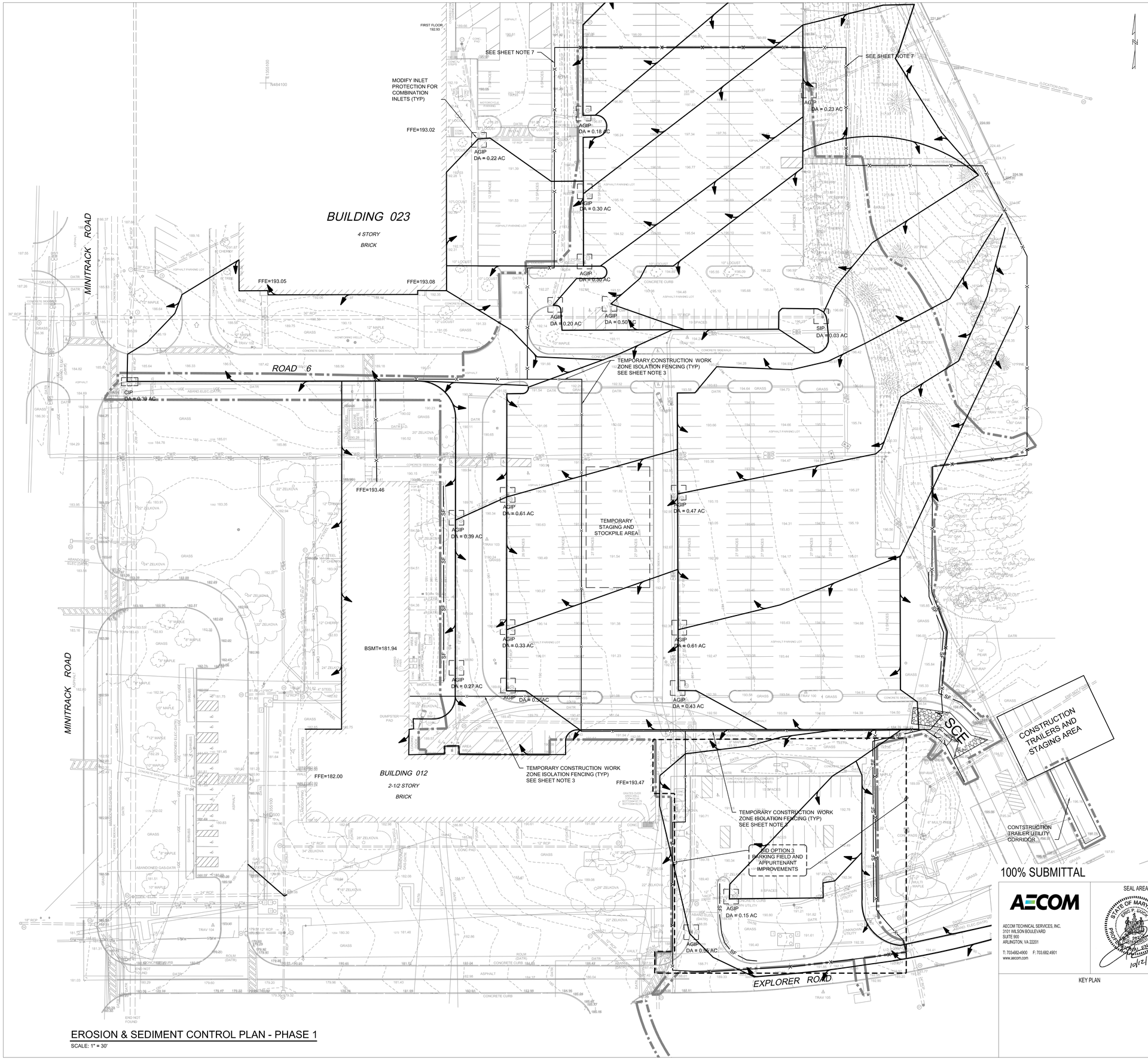

EROSION & SEDIMENT CONTROL PLAN - PHASE 1

SCALE: 1" = 30'

NOTES THIS SHEET:

1. EROSION AND SEDIMENT CONTROL WILL BE STRICTLY ENFORCED.
2. SEE SHEET C001 FOR GENERAL NOTES AND SITEWORK LEGEND.
3. INSTALL TEMPORARY CONSTRUCTION WORK ZONE ISOLATION FENCING AS NEEDED TO ALLOW EMERGENCY EGRESS FROM EXISTING FACILITIES WITHOUT HAVING TO GO THROUGH A WORK ZONE.
4. SEE SHEETS C501 TO C504 FOR EROSION CONTROL NOTES AND DETAILS.
5. CONSTRUCTION ENTRANCE INSTALLATIONS SHALL BE COORDINATED TO THE CONSTRUCTION STAGE (SEE NOTE 3).
6. CONTRIBUTING AREA TO EACH INLET LESS THAN 0.5 AC UNLESS OTHERWISE NOTED.
7. WHERE THE CONSTRUCTION FENCE IS OUTSIDE THE LIMITS OF DISTURBANCE, THE CONTRACTOR SHALL NOT DISTURB ANY AREA BETWEEN THE LIMITS AND THE CONSTRUCTION FENCE.
8. STORAGE AND STAGING AREAS MUST COMPLY WITH SECTION 4.9 OF GSFC STORMWATER POLLUTION PREVENTION PLAN IN ADDITION TO STATE REQUIREMENTS.
9. IF BID OPTION 3 IS NOT AWARDED, NO EROSION CONTROL INSTALLATIONS SHALL BE PERFORMED WITHIN THE BID OPTION WORK ZONE EXCEPT FOR THE FOLLOWING:

   EROSION CONTROL MEASURES FOR LINEAR UTILITY INSTALLATIONS.

EROSION & SEDIMENT CONTROL LEGEND

SCE	STABILIZED CONSTRUCTION ENTRANCE
SF	SILT FENCE
SSF	SUPER SILT FENCE
SIP	STANDARD INLET PROTECTION
AGIP	AT GRADE INLET PROTECTION
CIP	CURB INLET PROTECTION
	LIMIT OF DISTURBANCE
CD	CHECK DAM
	DRAINAGE DIVIDE
TP	TREE PROTECTION
X	CONSTRUCTION FENCING (SEE NOTE 3)

EROSION AND SEDIMENT CONTROL
PHASE I - SEQUENCE OF CONSTRUCTION

1. THE CONTRACTOR SHALL NOTIFY THE WATER MANAGEMENT ADMINISTRATION (WMA) AT (410)537-3510 SEVEN (7) DAYS BEFORE COMMENCING ANY LAND DISTURBING ACTIVITY AND, UNLESS WAIVED BY THE ADMINISTRATION SHALL BE REQUIRED TO HOLD A PRE CONSTRUCTION MEETING BETWEEN PROJECT REPRESENTATIVES AND A REPRESENTATIVE OF WMA.
2. LOCATE LIMITS OF DISTURBANCE AND TREE PROTECTION MEASURES AS SHOWN ON PLAN.
3. INSTALL CONSTRUCTION FENCING AROUND SITE.
4. REMOVE PAVEMENT AS REQUIRED TO INSTALL STABILIZED CONSTRUCTION ENTRANCE (SCE). INSTALL SCE, SILT FENCE, CHECK DAM, AND INLET PROTECTION AS SHOWN ON THE EROSION AND SEDIMENT CONTROL PLAN.
5. ESTABLISH CONSTUCTION TRAILERS AND STAGING AREAS AS SHOWN ON THE EROSION AND SEDIMENT CONTROL PLAN.
6. PERFORM DEMOLITION AND CLEAR AND GRUB SITE AS NECESSARY TO PREPARE FOR CONSTRUCTION. NOTE: WHEN DEMOLITION OF DRAINAGE SYSTEMS THAT CONVEY RUNOFF FROM UP-GRADIENT AREAS IS PERFORMED, PERMANENT OR TEMPORARY PIPING SHALL BE INSTALLED TO MAINTAIN CONVEYANCE OF CLEAN RUNOFF AROUND CONSTRUCTION AREAS.
7. FOR UTILITY CONSTRUCTION OUTSIDE OF THE DESIGNED SEDIMENT CONTROLS, SEE NOTE 22 OF THE EROSION AND SEDIMENT CONTROL PLAN NOTES ON SHEET C-501.

1"=30' 30' 15' 0 30' 60'

100% SUBMITTAL

AECOM
AECOM TECHNICAL SERVICES, INC.
3101 WILSON BOULEVARD
SUITE 900
ARLINGTON, VA 22201
T: 703-682-4900 F: 703.682.4901
www.aecom.com

SEAL AREA

STATE OF MARYLAND — ERIC P. KUPER — No. 26031 — PROFESSIONAL ENGINEER
10/12/2012

KEY PLAN

REV	DATE	DESCRIPTION	S&R BR.	CUSTOMER	PM	SECT. HEAD

	INITIALS	DATE
DRAWN BY	MLF	06/17/11
CHECKED BY	FM	
A-E MANAGER	EW	
ENVIRONMENTAL BRANCH	JH	
SAFETY BRANCH	CS	
CM	MMD	
PM	RWP	
CUSTOMER	JWB	
ENG. BRANCH	DGL	

EROSION & SEDIMENT CONTROL PLAN PHASE 1

C-106

FLIGHT PROJECTS BUILDING

NATIONAL AERONAUTICS AND SPACE ADMINISTRATION

GODDARD SPACE FLIGHT CENTER GREENBELT, MARYLAND
FACILITIES MANAGEMENT DIVISION

DATE ISSUED	CoF CODE OR WR#	AECOM PROJECT NO.	SCALE
10/12/2012	12GXAZ	60187636	

FILE DATE: 10/10/2012 1:53:05 PM

File Location: M:\WATER\60190712 GODDARD SPACE FLIGHT CENTER\0001\CADD\DWG\90712C-106.DWG Page Setup Name: ----; InsUnits: 2; LTScale: 1.00 Measurement: 0;
Plotted By: FRAZIER, MICHELLE; Plot Date: Wednesday, October 10, 2012; Plot CTB File: ----;

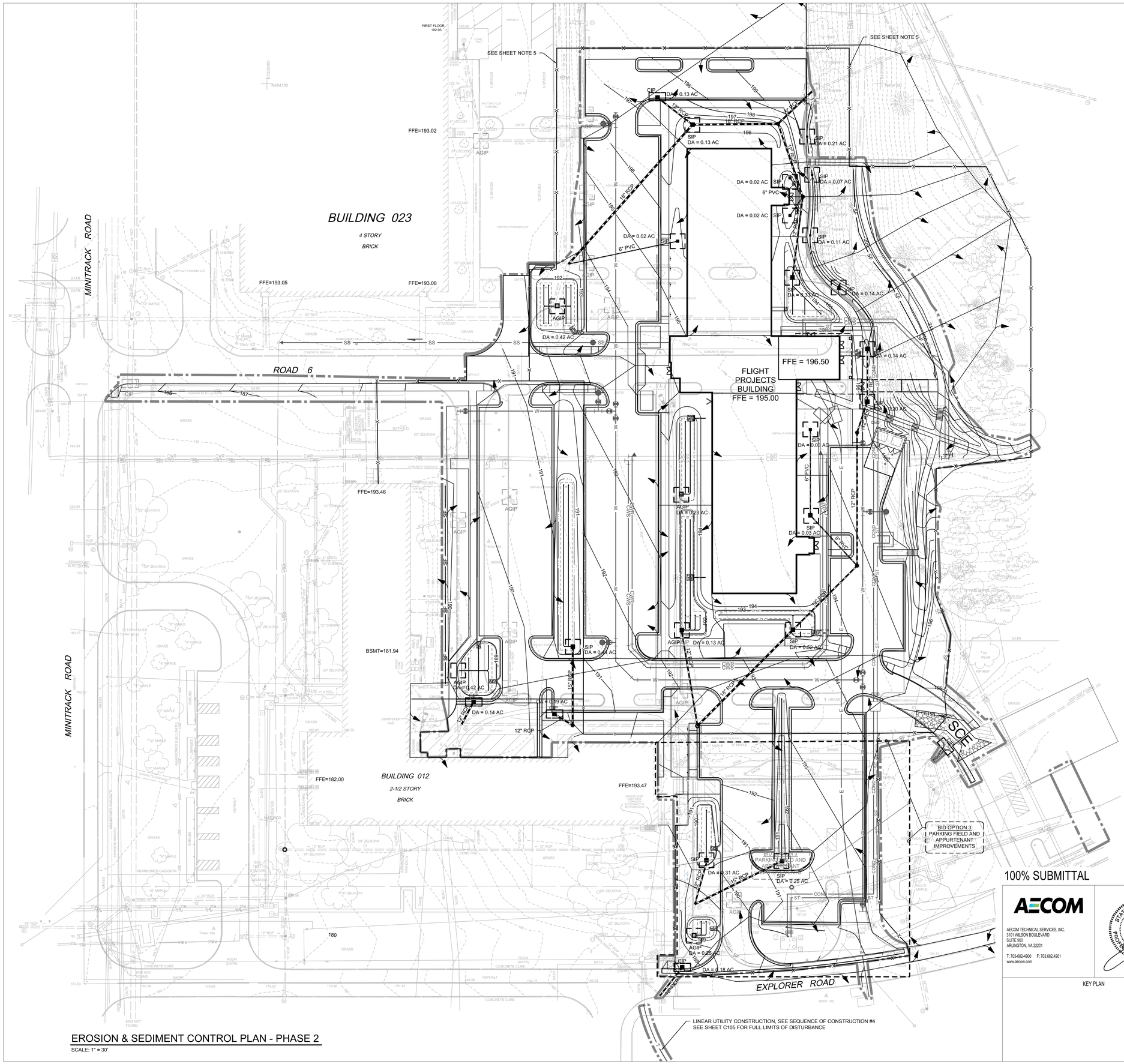

EROSION & SEDIMENT CONTROL PLAN - PHASE 2

SCALE: 1" = 30'

NOTES THIS SHEET:

1. EROSION AND SEDIMENT CONTROL WILL BE STRICTLY ENFORCED.
2. SEE SHEET C001 FOR GENERAL NOTES AND SITEWORK LEGEND.
3. SEE SHEET C106 FOR PHASE I EROSION CONTROL REQUIREMENTS AND SEQUENCING INDICATED.
4. SEE SHEETS C501 TO C504 FOR EROSION CONTROL NOTES AND DETAILS.
5. WHERE THE CONSTRUCTION FENCE IS OUTSIDE THE LIMITS OF DISTURBANCE, THE CONTRACTOR SHALL NOT DISTURB ANY AREA BETWEEN THE LIMITS AND THE CONSTRUCTION FENCE.
6. ALL STANDARD INLET PROECTION (SIP) WITH DRAINAGE AREAS LARGER THAN 0.25 ACRES SHALL BE TYPE 'B' SIP. SIP WITH DRAINAGE AREAS 0.25 ACRES AND UNDER SHALL BE TYPE 'A'.
7. IF BID OPTION 3 IS NOT AWARDED, NO EROSION CONTROL INSTALLATIONS SHALL BE PERFORMED WITHIN THE BID OPTION WORK ZONE EXCEPT FOR THE FOLLOWING;

   EROSION CONTROL MEASURES FOR LINEAR UTILITY INSTALLATIONS.

EROSION & SEDIMENT CONTROL LEGEND

SCE	STABILIZED CONSTRUCTION ENTRANCE
SF	SILT FENCE
SSF	SUPER SILT FENCE
SIP	STANDARD INLET PROTECTION
AGIP	AT GRADE INLET PROTECTION
CIP	CURB INLET PROTECTION
	LIMIT OF DISTURBANCE
CD	CHECK DAM
	DRAINAGE DIVIDE
TP	TREE PROTECTION

EROSION AND SEDIMENT CONTROL PHASE II - SEQUENCE OF CONSTRUCTION

1. ALL EROSION AND SEDIMENT CONTROL DEVICES INSTALLED AS PART OF PHASE I SHALL REMAIN IN PLACE AND FUNCTIONING FOR PHASE II UNTIL RELOCATED OR REMOVED BY THE NEW WORK, AND SHALL BE MAINTAINED AS LONG AS IT REMAINS.
2. BEGIN BUILDING (FOUNDATION) CONSTRUCTION.
3. INSTALL UNDERGROUND UTILITIES, INCLUDING STORM DRAIN SYSTEM. PROVIDE INLET PROTECTION IMMEDIATELY AS STORM INLETS ARE CONSTRUCTED.
4. FOR UTILITY CONSTRUCTION OUTSIDE OF DESIGNED SEDIMENT CONTROLS, SEE NOTE 22 OF THE EROSION AND SEDIMENT CONTROL PLAN NOTES ON SHEET C-501.
5. ONCE ALL STORM DRAIN INLETS ARE INSTALLED AND PROTECTED, GRADE SITE TO INLETS. ENSURE STORMWATER RUNOFF IS BE CONVEYED ONLY TO PROTECTED INLETS.
6. COMPLETE PROJECT SITEWORK IMPROVEMENTS.
7. AFTER STABILIZATION OF UP-GRADIENT AREAS, CONSTRUCT STORMWATER MANAGEMENT FACILITIES.
8. FINISH GRADE ALL REMAINING AREAS AND STABILIZE WITH VEGETATION
9. UPON SITE STABILIZATION AND WITH THE APPROVAL OF THE SEDIMENT CONTROL INSPECTOR, REMOVE ALL EROSION AND SEDIMENT CONTROL MEASURES.
10. STABILIZE ALL AREAS DISTURBED DURING REMOVAL OF EROSION AND SEDIMENT CONTROLS.

1"=30' 30' 15' 0 30' 60'

100% SUBMITTAL

AECOM
AECOM TECHNICAL SERVICES, INC.
3101 WILSON BOULEVARD
SUITE 900
ARLINGTON, VA 22201
T: 703-682-4900 F: 703.682.4901
www.aecom.com

SEAL AREA

STATE OF MARYLAND — CHRIS P. GUDAS — 26324 — PROFESSIONAL ENGINEER
10/12/2012

KEY PLAN

REV	DATE	DESCRIPTION			S&R BR.	CUSTOMER	PM	SECT. HEAD

	INITIALS	DATE
DRAWN BY	MLF	06/17/11
CHECKED BY	FM	
A-E MANAGER	EW	
ENVIRONMENTAL BRANCH	JH	
SAFETY BRANCH	CS	
CM	MMD	
PM	RWP	
CUSTOMER	JWB	
ENG. BRANCH	DGL	

EROSION & SEDIMENT CONTROL PLAN PHASE 2

C-107

FLIGHT PROJECTS BUILDING

NATIONAL AERONAUTICS AND SPACE ADMINISTRATION

GODDARD SPACE FLIGHT CENTER GREENBELT, MARYLAND
FACILITIES MANAGEMENT DIVISION

DATE ISSUED	CoF CODE OR WR#	AECOM PROJECT NO.	SCALE
10/12/2012	12GXAZ	60187636	

File Location: M:\WATER\60190712 GODDARD SPACE FLIGHT CENTER\000\1\CADD\DWG\697126_107.DWG
Plotted By: FRAZIER, MICHELLE; Plot Date: Wednesday, October 10, 2012; Plot CTB File: ----; Page Setup Name: ----; Insl/Hide: 2; LTScale: 1.00 Measurement: 0;
FILE DATE: 10/10/2012 1:53:41 PM

NOTES THIS SHEET:

1. SEE SHEET C001 FOR GENERAL NOTES AND LEGENDS.
2. SEE SHEET C104 FOR STORM DRAIN LAYOUT AND NOTES.
3. SEE SHEET C601 FOR STORM DRAIN STRUCTURE SCHEDULE.
4. HIGH DENSITY POLYETHYLENE (HDPE) STORM DRAIN PIPE MAY BE SUBSTITUTED WHERE RCP IS INDICATED.

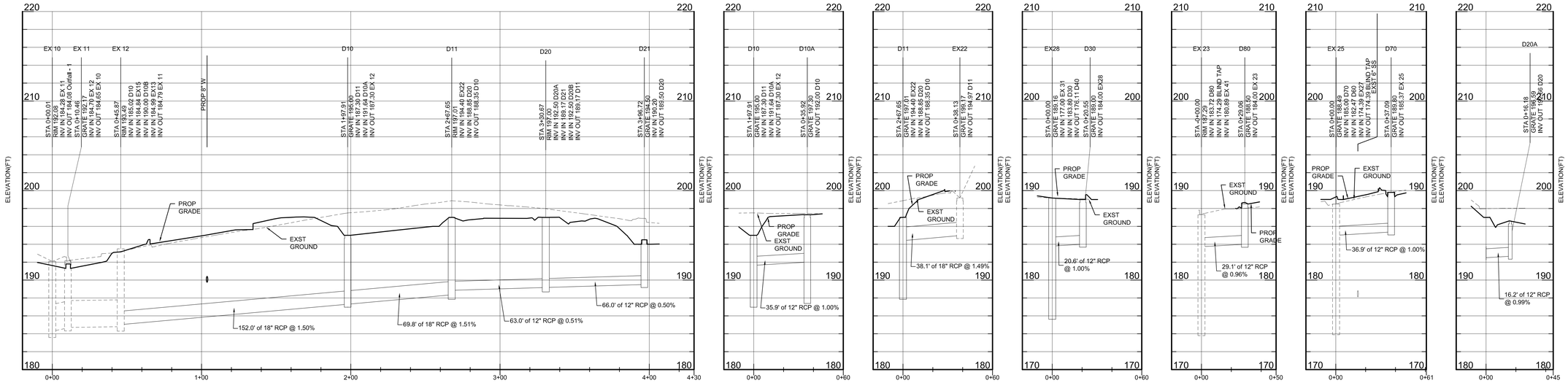

STORM DRAIN PROFILES

SCALE: H:1" = 30'/V:1" = 5'

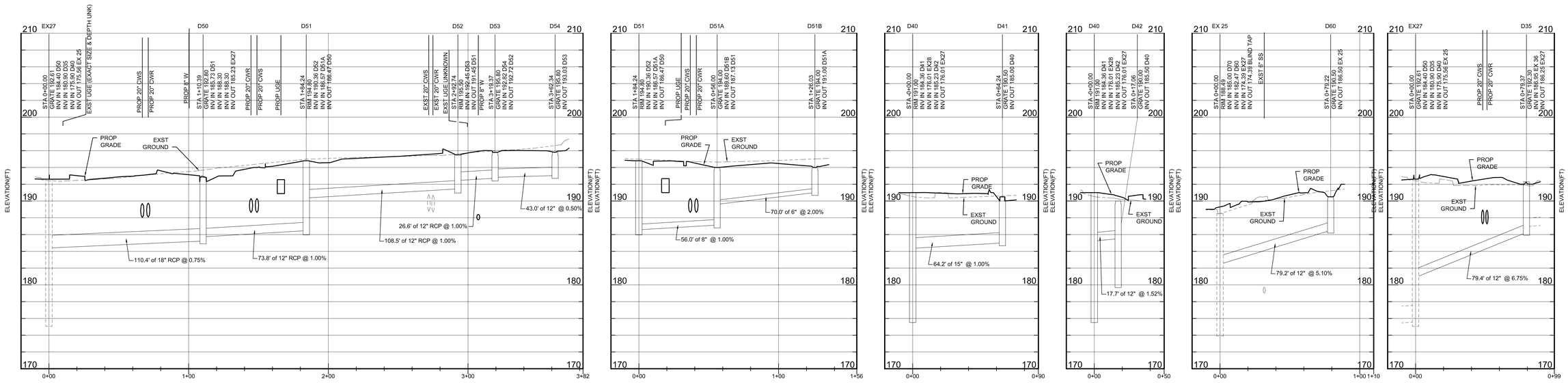

STORM DRAIN PROFILES

SCALE: H:1" = 30'/V:1" = 5'

1"=5' 5' 0 5' 10'

1"=30' 30' 15' 0 30' 60'

100% SUBMITTAL

AECOM

AECOM TECHNICAL SERVICES, INC.
3101 WILSON BOULEVARD
SUITE 900
ARLINGTON, VA 22201

T: 703-682-4900 F: 703.682.4901
www.aecom.com

SEAL AREA

STATE OF MARYLAND — ERIC W. WEIRICK — PROFESSIONAL ENGINEER — 10/12/2012

KEY PLAN

REV	DATE	DESCRIPTION	S&R BR.	CUSTOMER	PM	SECT. HEAD

	INITIALS	DATE
DRAWN BY	MLF	06/17/11
CHECKED BY	FM	
A-E MANAGER	EW	
ENVIRONMENTAL BRANCH	JH	
SAFETY BRANCH	CS	
CM	MMD	
PM	RWP	
CUSTOMER	JWB	
ENG. BRANCH	DGL	

PROFILES

C-201

FLIGHT PROJECTS BUILDING

NATIONAL AERONAUTICS AND SPACE ADMINISTRATION

GODDARD SPACE FLIGHT CENTER GREENBELT, MARYLAND
FACILITIES MANAGEMENT DIVISION

DATE ISSUED	CoF CODE OR WR#	AECOM PROJECT NO.	SCALE
10/12/2012	12GXAZ	60187636	

File Location: M:\COMMON\DEPARTMENT\CIVIL\60190712 GODDARD SFC\697122_201.DWG
Plotted By: FRAZIER, MICHELLE; Plot Date: Monday, October 15, 2012; Plot CTB File: ----; Page Setup Name: ----; InsUnits: 2; LTScale: 1.00 Measurement: 0;
FILE DATE: 10/15/2012 12:06:46 PM

NOTES THIS SHEET:

1. SEE SHEET C001 FOR GENERAL NOTES AND LEGENDS.
2. SEE SHEET C105 FOR WATERLINE LAYOUT AND NOTES.

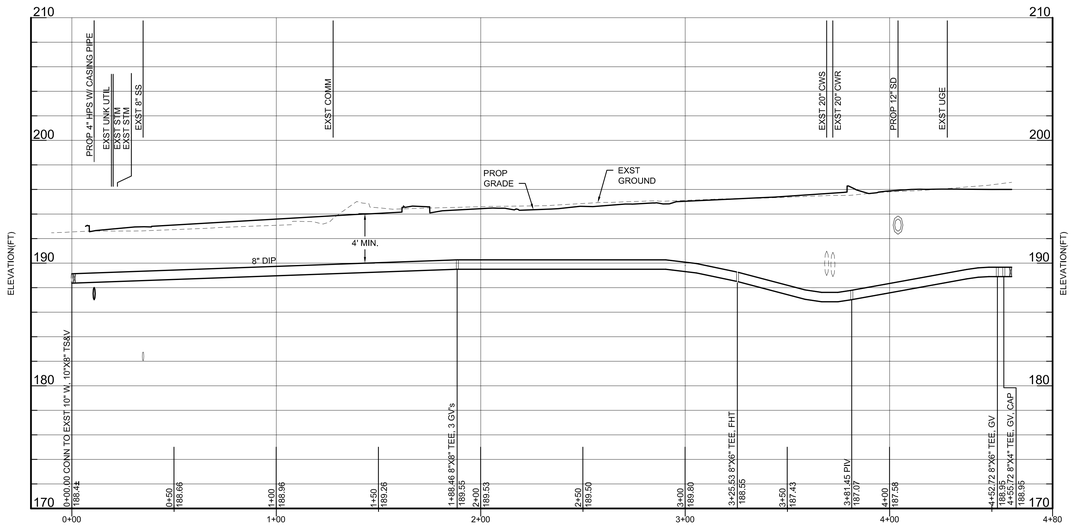

WATERLINE A PROFILE

SCALE: H:1" = 30'/V:1" = 5'

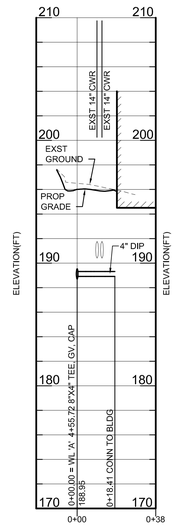

4" DOM. WATER PROFILE

SCALE: H:1" = 30'/V:1" = 5'

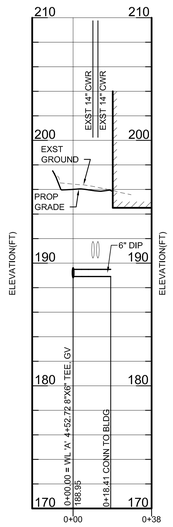

6" FIRE PROT. PROFILE

SCALE: H:1" = 30'/V:1" = 5'

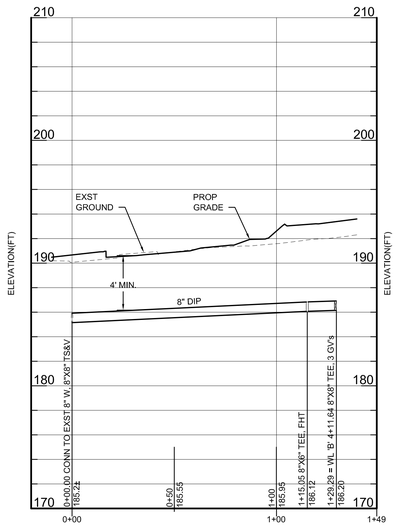

WATERLINE C PROFILE

SCALE: H:1" = 30'/V:1" = 5'

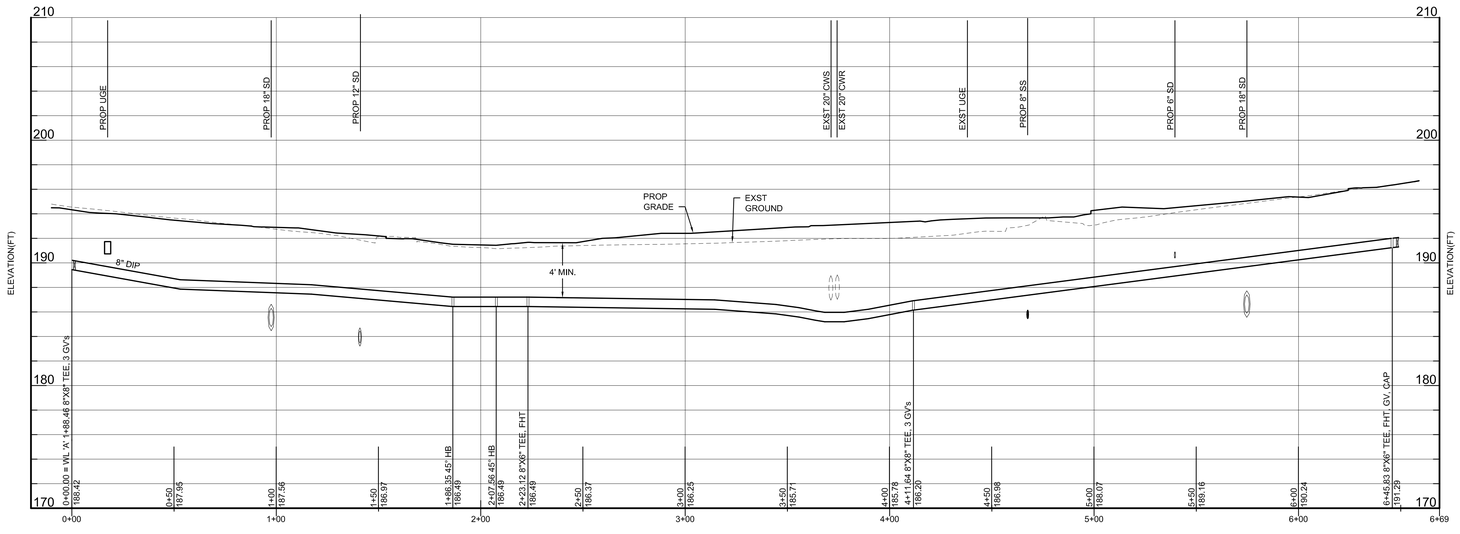

WATERLINE B PROFILE

SCALE: H:1" = 30'/V:1" = 5'

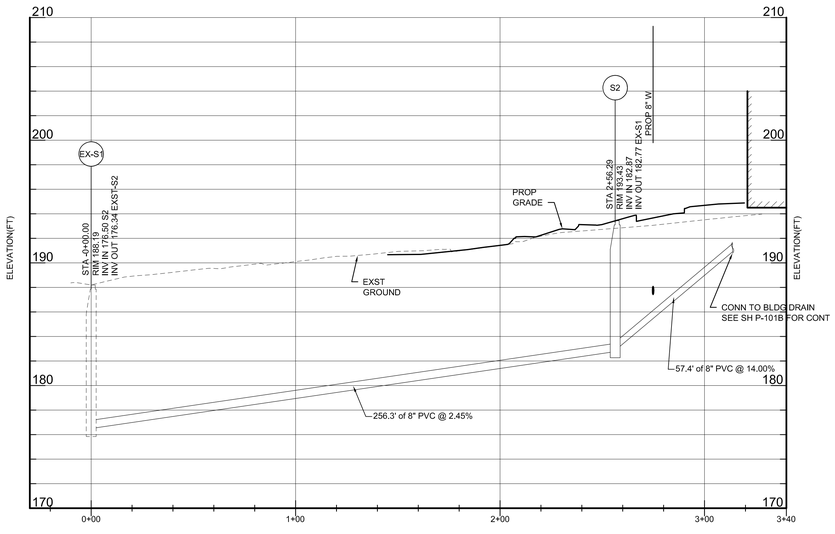

SANITARY SEWER PROFILE

SCALE: H:1" = 30'/V:1" = 5'

1"=5' 5' 0 5' 10'

1"=30' 30' 15' 0 30' 60'

100% SUBMITTAL

AECOM

AECOM TECHNICAL SERVICES, INC.
3101 WILSON BOULEVARD
SUITE 900
ARLINGTON, VA 22201

T: 703-682-4900 F: 703.682.4901
www.aecom.com

SEAL AREA

STATE OF MARYLAND — ERIC P. GUDAT — No. 28128 — PROFESSIONAL ENGINEER

10/12/2012

KEY PLAN

REV	DATE	DESCRIPTION	S&R BR.	CUSTOMER	PM	SECT. HEAD

	INITIALS	DATE
DRAWN BY	MLF	06/17/11
CHECKED BY	FM	
A-E MANAGER	EW	
ENVIRONMENTAL BRANCH	JH	
SAFETY BRANCH	CS	
CM	MMD	
PM	RWP	
CUSTOMER	JWB	
ENG. BRANCH	DGL	

PROFILES

C-202

FLIGHT PROJECTS BUILDING

NATIONAL AERONAUTICS AND SPACE ADMINISTRATION

GODDARD SPACE FLIGHT CENTER GREENBELT, MARYLAND
FACILITIES MANAGEMENT DIVISION

DATE ISSUED	CoF CODE OR WR#	AECOM PROJECT NO.	SCALE
10/12/2012	12GXAZ	60187636	

FILE DATE: 10/10/2012 1:55:47 PM

File Location: M:\WATER\60190712 GODDARD SPACE FLIGHT CENTER\0001\CADD\DWG\957126_202.DWG Page Setup Name: ----; Inst/Units: 2; LTScale: 1.00 Measurement: 0;
Plotted By: FRAZIER, MICHELLE; Plot Date: Wednesday, October 10, 2012; Plot CTB File: ----;

NOTES THIS SHEET:

1. SEE SHEET C001 FOR GENERAL NOTES AND LEGENDS.
2. SEE SHEET C105 FOR SANITARY SEWER LAYOUT AND NOTES.
3. SEE SHEET M505 FOR STEAM MANHOLE DETAILS.

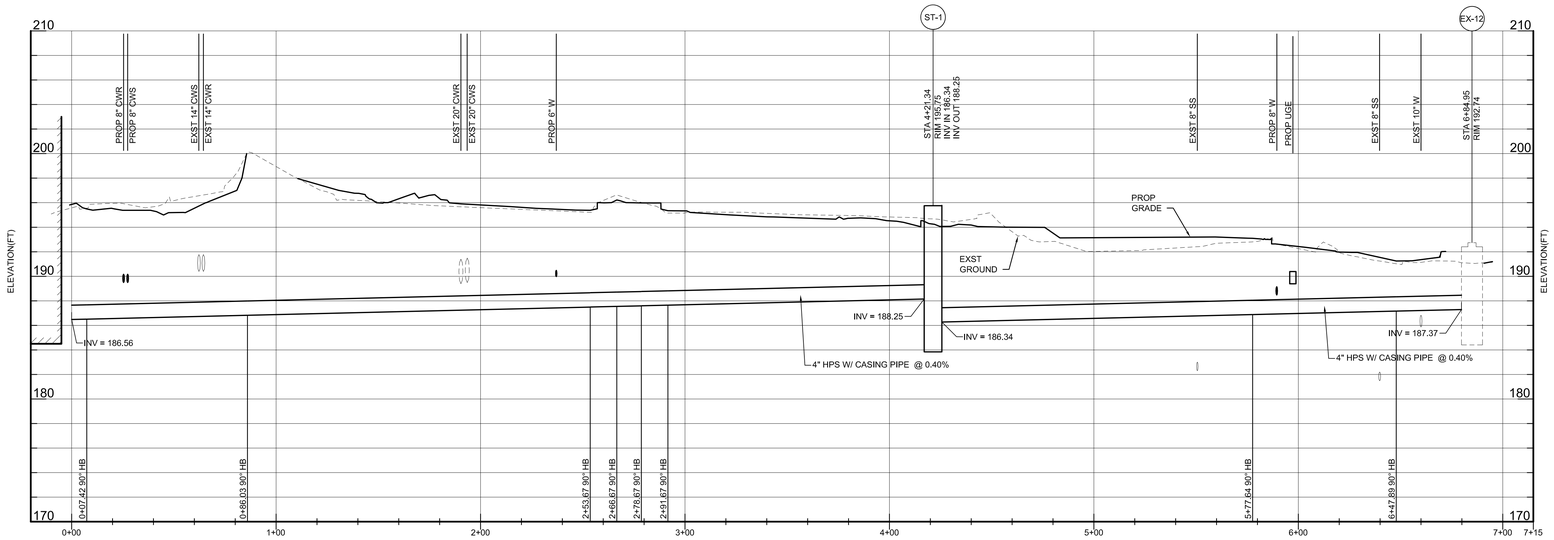

STEAM LINE PROFILE

SCALE: H:1" = 30'/V:1" = 5'

NOTE: 4" STEAM LINE WITH CASING PIPE IS PROFILED ABOVE. THE 2" CONDENSATE LINE IS OFFSET APPROXIMATELY 3' O.C. TO THE BUILDING SIDE OF THE STEAM LINE.

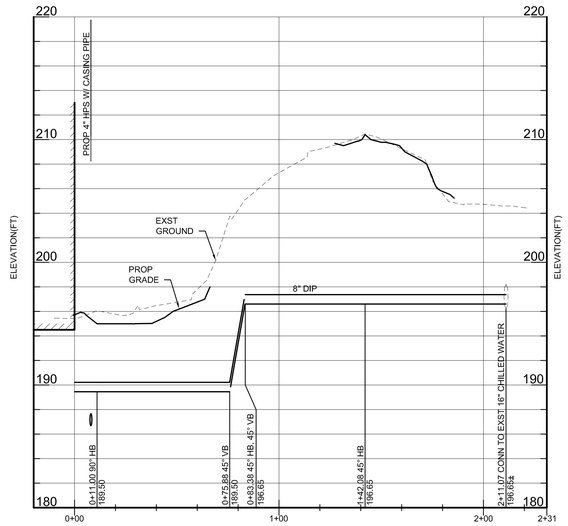

8" CHILLED WATER LINE PROFILE

SCALE: H:1" = 30'/V:1" = 5'

NOTE: THE 8" CHILLED WATER SUPPLY LINE IS PROFILED ABOVE. THE 8" CHILLED WATER RETURN LINE IS OFFSET APPROXIMATELY 3' O.C. TO THE OUTSIDE OF THE SUPPLY LINE.

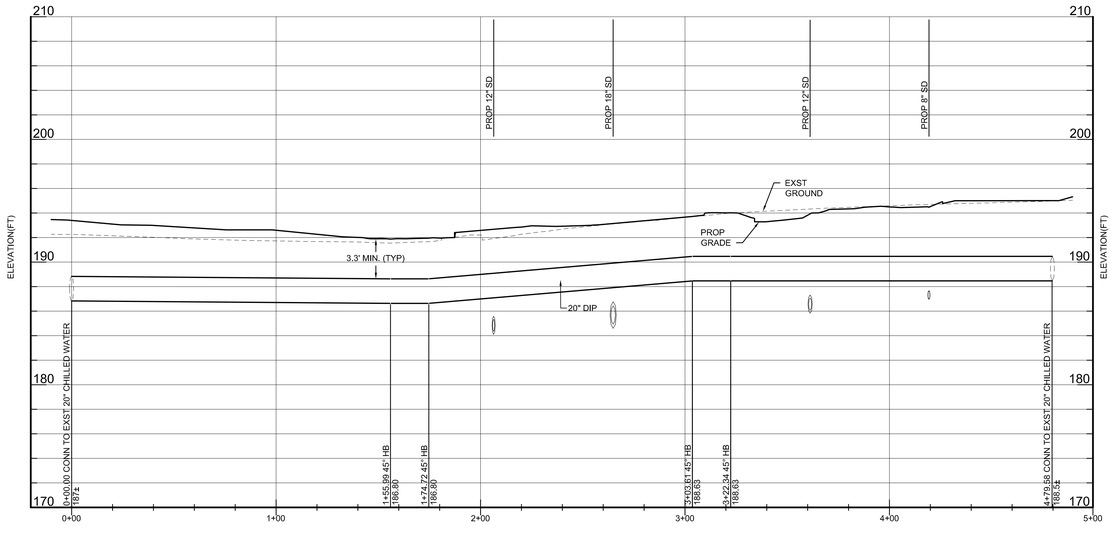

RELOCATED CHILLED WATER LINE PROFILE

SCALE: H:1" = 30'/V:1" = 5'

NOTE: THE 20" CHILLED WATER RETURN LINE IS PROFILED ABOVE. THE 20" CHILLED WATER SUPPLY LINE IS OFFSET APPROXIMATELY 3' O.C. AWAY FROM THE BUILDING FROM THE RETURN LINE.

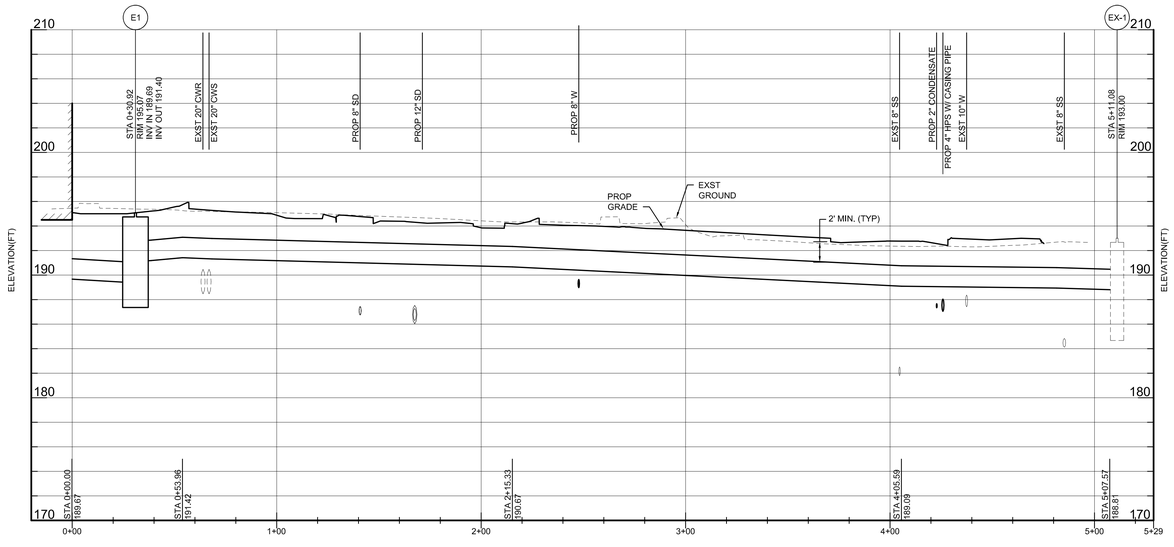

ELECTRICAL & TELECOMMUNICATIONS DUCTBANK PROFILE

SCALE: H:1" = 30'/V:1" = 5'

NOTE: THE ELECTRICAL DUCTBANK IS PROFILED ABOVE. THE ELECTRICAL DUCTBANK AND TELECOMMUNICATIONS DUCTBANK ARE RUN IN PARALLEL BETWEEN MANHOLE E1 AND STA 4+81.50. THE TELECOMMUNICATIONS DUCTBANK SHALL BE CONSTRUCTED IN THE SAME MANNER AS THE ELECTRICAL DUCTBANK, DRAINING AWAY FROM THE BUILDING AND DRAINING INTO THE EXISTING TELECOMMUNICATIONS MANHOLE.

1"=5' 5' 0 5' 10'

1"=30' 30' 15' 0 30' 60'

100% SUBMITTAL

AECOM

AECOM TECHNICAL SERVICES, INC.
3101 WILSON BOULEVARD
SUITE 900
ARLINGTON, VA 22201

T: 703-682-4900 F: 703.682.4901
www.aecom.com

SEAL AREA

STATE OF MARYLAND — GREG P. KUPPER — No. 28031 — PROFESSIONAL ENGINEER

10/12/2012

KEY PLAN

REV	DATE	DESCRIPTION	S&R BR.	CUSTOMER	PM	SECT. HEAD

	INITIALS	DATE
DRAWN BY	MLF	06/17/11
CHECKED BY	FM	
A-E MANAGER	EW	
ENVIRONMENTAL BRANCH	JH	
SAFETY BRANCH	CS	
CM	MMD	
PM	RWP	
CUSTOMER	JWB	
ENG. BRANCH	DGL	

PROFILES

C-203

FLIGHT PROJECTS BUILDING

NATIONAL AERONAUTICS AND SPACE ADMINISTRATION

GODDARD SPACE FLIGHT CENTER GREENBELT, MARYLAND
FACILITIES MANAGEMENT DIVISION

DATE ISSUED	CoF CODE OR WR#	AECOM PROJECT NO.	SCALE
10/12/2012	12GKAZ	60187636	

FILE DATE: 10/10/2012 1:56:12 PM

File Location: M:\WATER\60190712 (GODDARD SPACE FLIGHT CENTER)\0001\CADD\DWG\90712C_203.DWG
Plotted By: FRAZER, MICHELLE; Plot Date: Wednesday, October 10, 2012; Plot CTB File: ----; Page Setup Name: ----; InsUnits: 2; LTScale: 1.00 Measurement: 0;

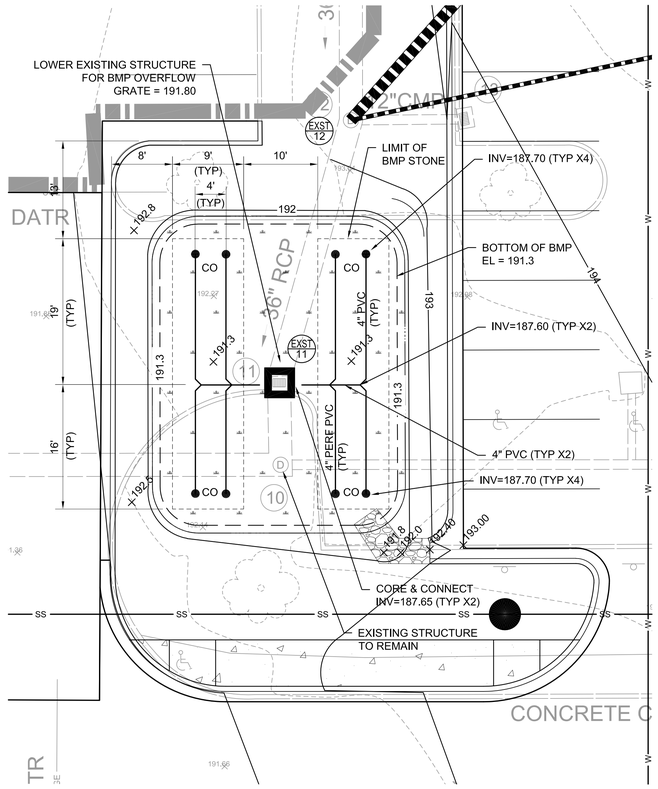

BMP - 2.1

SCALE: 1" = 10'

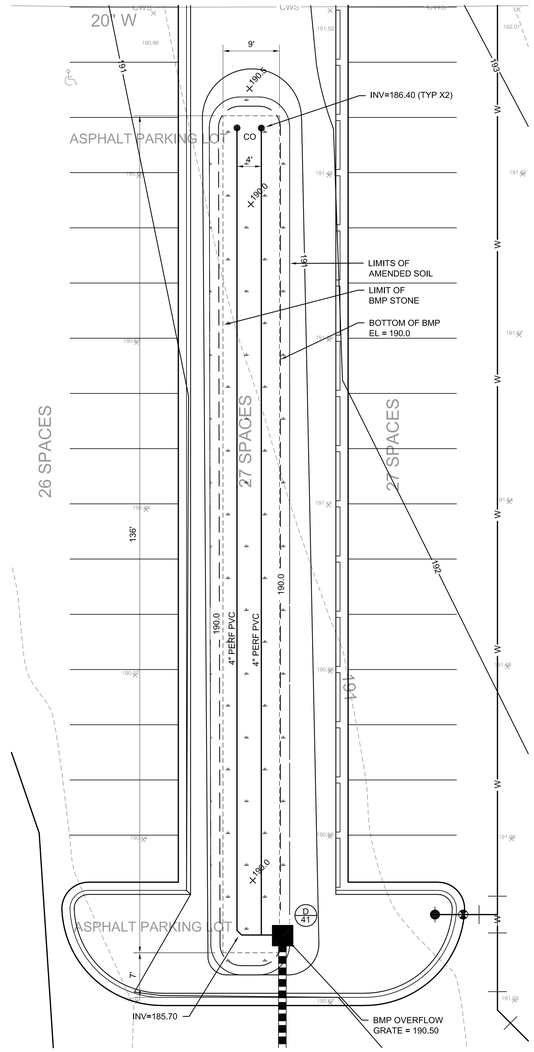

BMP - 4.1

SCALE: 1" = 10'

NOTES THIS SHEET:

1. SEE SH C-505 FOR BMP DETAILS, TYPICAL SECTIONS, NOTES AND CERTIFICATIONS.
2. REFER TO LANDSCAPE PLANS FOR FINAL PLANTING LAYOUT AND SCHEDULES.

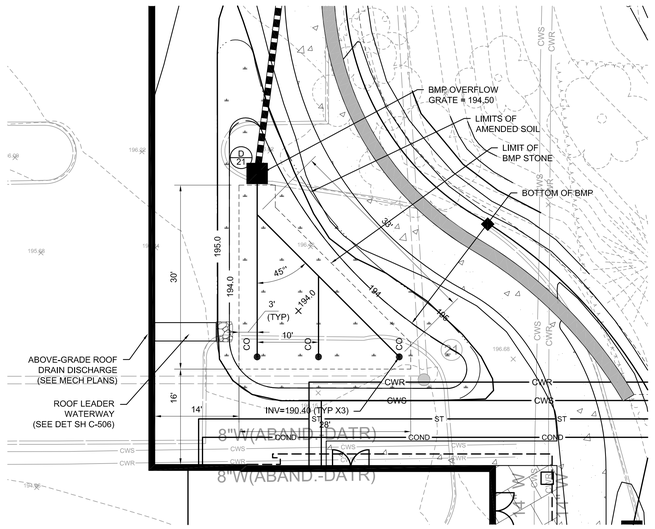

BMP - 3.1

SCALE: 1" = 10'

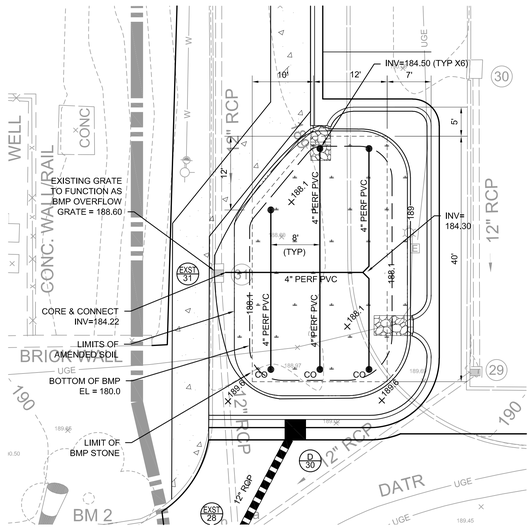

BMP - 4.2

SCALE: 1" = 10'

100% SUBMITTAL

10' 5' 0 10' 20'
1"=10'

AECOM

AECOM TECHNICAL SERVICES, INC.
3101 WILSON BOULEVARD
SUITE 900
ARLINGTON, VA 22201

T: 703-682-4900 F: 703.682.4901
www.aecom.com

SEAL AREA

STATE OF MARYLAND
ERIC P. LUCAS
No. 28134
PROFESSIONAL ENGINEER
10/12/2012

KEY PLAN

REV	DATE	DESCRIPTION	S&R BR.	CUSTOMER	PM	SECT. HEAD

	INITIALS	DATE
DRAWN BY	MLF	06/17/11
CHECKED BY	FM	
A-E MANAGER	EW	
ENVIRONMENTAL BRANCH	JH	
SAFETY BRANCH	CS	
CM	MMD	
PM	RWP	
CUSTOMER	JWB	
ENG. BRANCH	DGL	

STORM WATER MANAGEMENT ENLARGED PLAN

C-401

FLIGHT PROJECTS BUILDING

NATIONAL AERONAUTICS AND SPACE ADMINISTRATION

GODDARD SPACE FLIGHT CENTER GREENBELT, MARYLAND
FACILITIES MANAGEMENT DIVISION

DATE ISSUED	CoF CODE OR WR#	AECOM PROJECT NO.	SCALE
10/12/2012	12GXAZ	60187636	

FILE DATE: 10/10/2012 1:56:43 PM

File Location: M:\WATER\60190712 GODDARD SPACE FLIGHT CENTER\0001\CADD\DWG\90712C_401.DWG Page Setup Name: ----; InsUnits: 2; LTScale: 1.00 Measurement: 0;
Plotted By: FRAZIER, MICHELLE; Plot Date: Wednesday, October 10, 2012; Plot CTB File: ----;

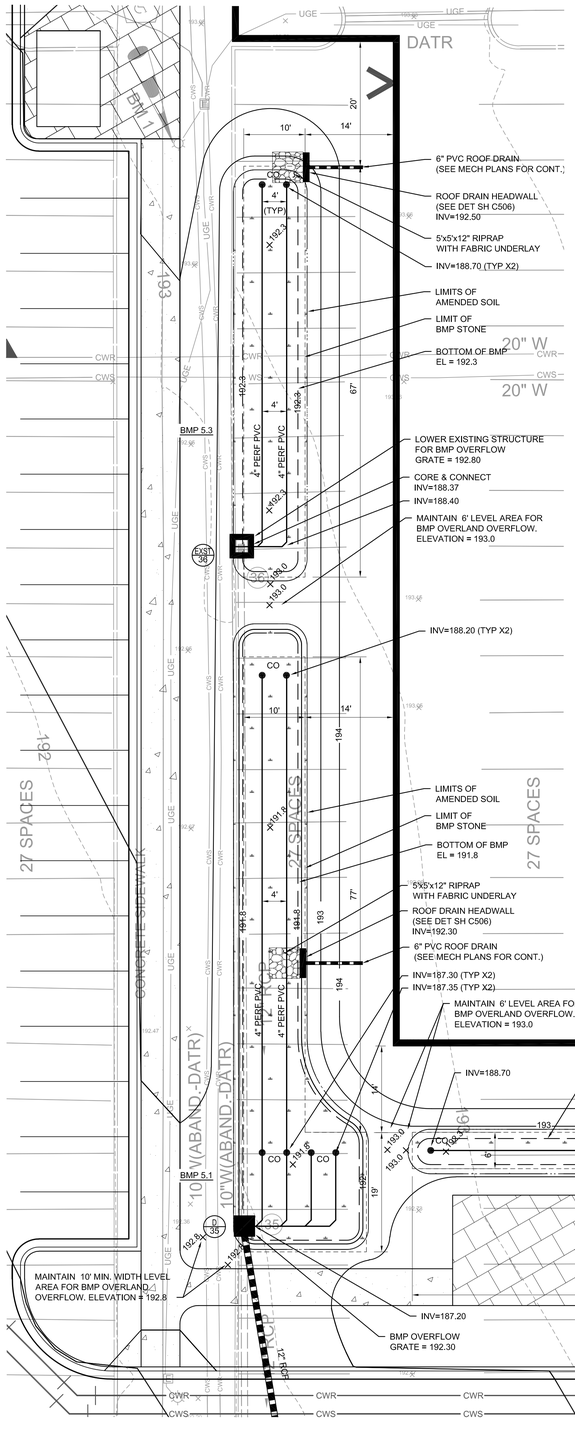

BMP - 5.1, 5.2 & 5.3

SCALE: 1" = 10'

BID OPTION 3
PARKING FIELD AND
APPURTENANT
IMPROVEMENTS

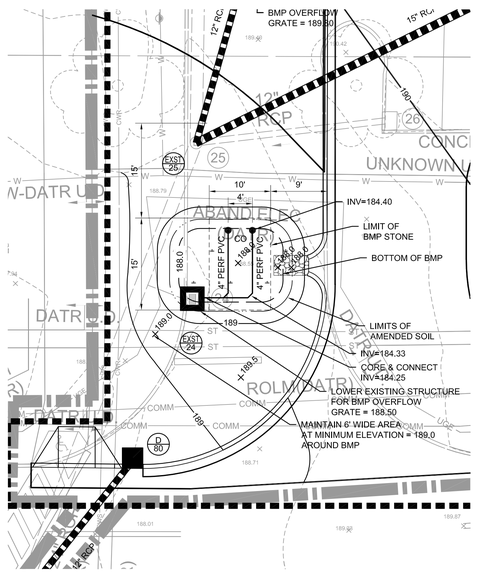

BMP - 6.1

SCALE: 1" = 10'

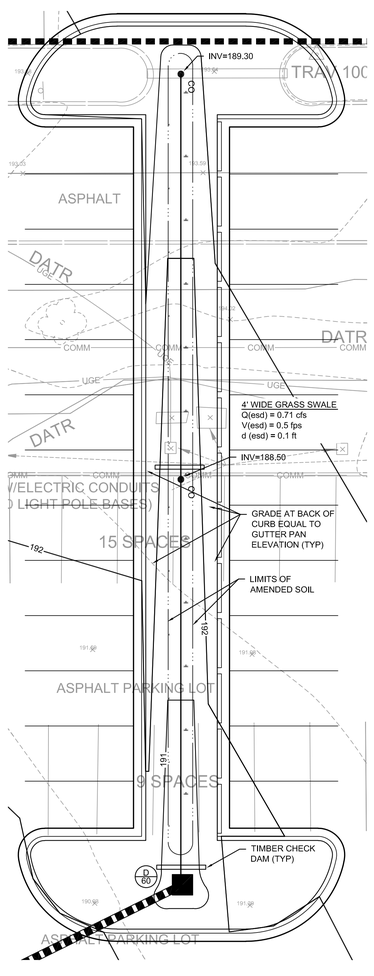

BMP - 6.2

SCALE: 1" = 10'

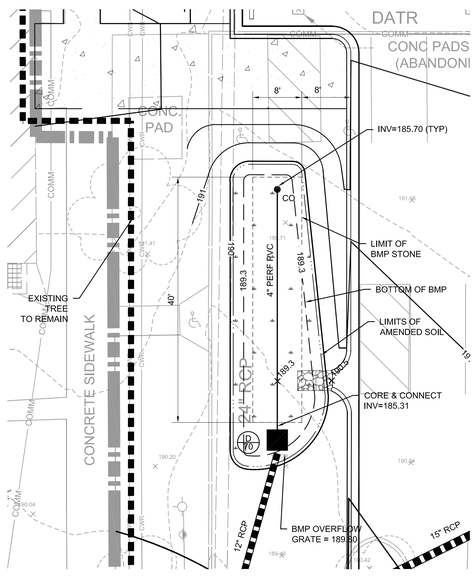

BMP - 6.3

SCALE: 1" = 10'

NOTES THIS SHEET:

1. SEE SH C-505 FOR BMP DETAILS, TYPICAL SECTIONS, NOTES AND CERTIFICATIONS.
2. REFER TO LANDSCAPE PLANS FOR FINAL PLANTING LAYOUT AND SCHEDULES.
3. IF BID OPTION 3 IS NOT AWARDED, BMP 6.1, 6.2 AND 6.3 SHALL NOT BE CONSTRUCTED.

100% SUBMITTAL

1"=10' 10' 5' 0 10' 20'

AECOM

AECOM TECHNICAL SERVICES, INC.
3101 WILSON BOULEVARD
SUITE 900
ARLINGTON, VA 22201

T: 703-682-4900 F: 703.682.4901
www.aecom.com

SEAL AREA

STATE OF MARYLAND
ERIC P. WOOD
29332
PROFESSIONAL ENGINEER
10/12/2012

KEY PLAN

REV	DATE	DESCRIPTION	S&R BR.	CUSTOMER	PM	SECT. HEAD

	INITIALS	DATE
DRAWN BY	MLF	06/17/11
CHECKED BY	FM	
A-E MANAGER	EW	
ENVIRONMENTAL BRANCH	JH	
SAFETY BRANCH	CS	
CM	MMD	
PM	RWP	
CUSTOMER	JWB	
ENG. BRANCH	DGL	

STORM WATER MANAGEMENT ENLARGED PLAN

C-402

FLIGHT PROJECTS BUILDING

NATIONAL AERONAUTICS AND SPACE ADMINISTRATION

GODDARD SPACE FLIGHT CENTER GREENBELT, MARYLAND
FACILITIES MANAGEMENT DIVISION

DATE ISSUED	CoF CODE OR WR#	AECOM PROJECT NO.	SCALE
10/12/2012	12GXAZ	60187636	

FILE DATE: 10/10/2012 1:57:20 PM

File Location: M:\WATER\60190712 GODDARD SPACE FLIGHT CENTER\000\1\CADD\DWG\697126_402.DWG; Plot CTB File: ----; Page Setup Name: ----; Inc/Units: 2; LTScale: 1.00 Measurement: 0;
Plotted By: FRAZIER, MICHELLE; Plot Date: Wednesday, October 10, 2012;

NOTES THIS SHEET:

1. SEE SHEET C001 FOR GENERAL CIVIL NOTES, LEGENDS & SURVEY CONTROL INFORMATION.

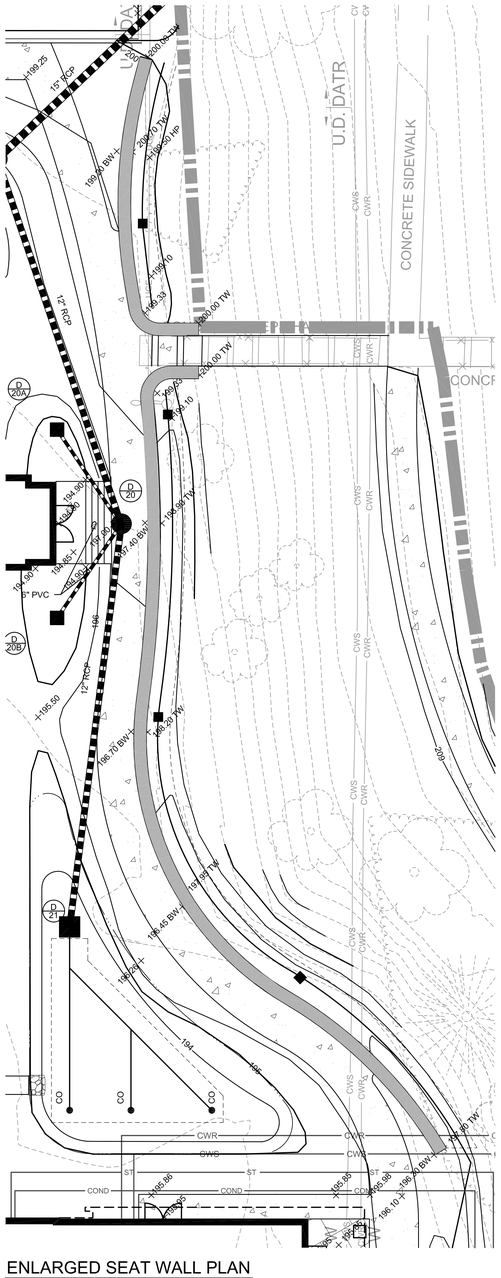

ENLARGED SEAT WALL PLAN

SCALE: 1" = 10'

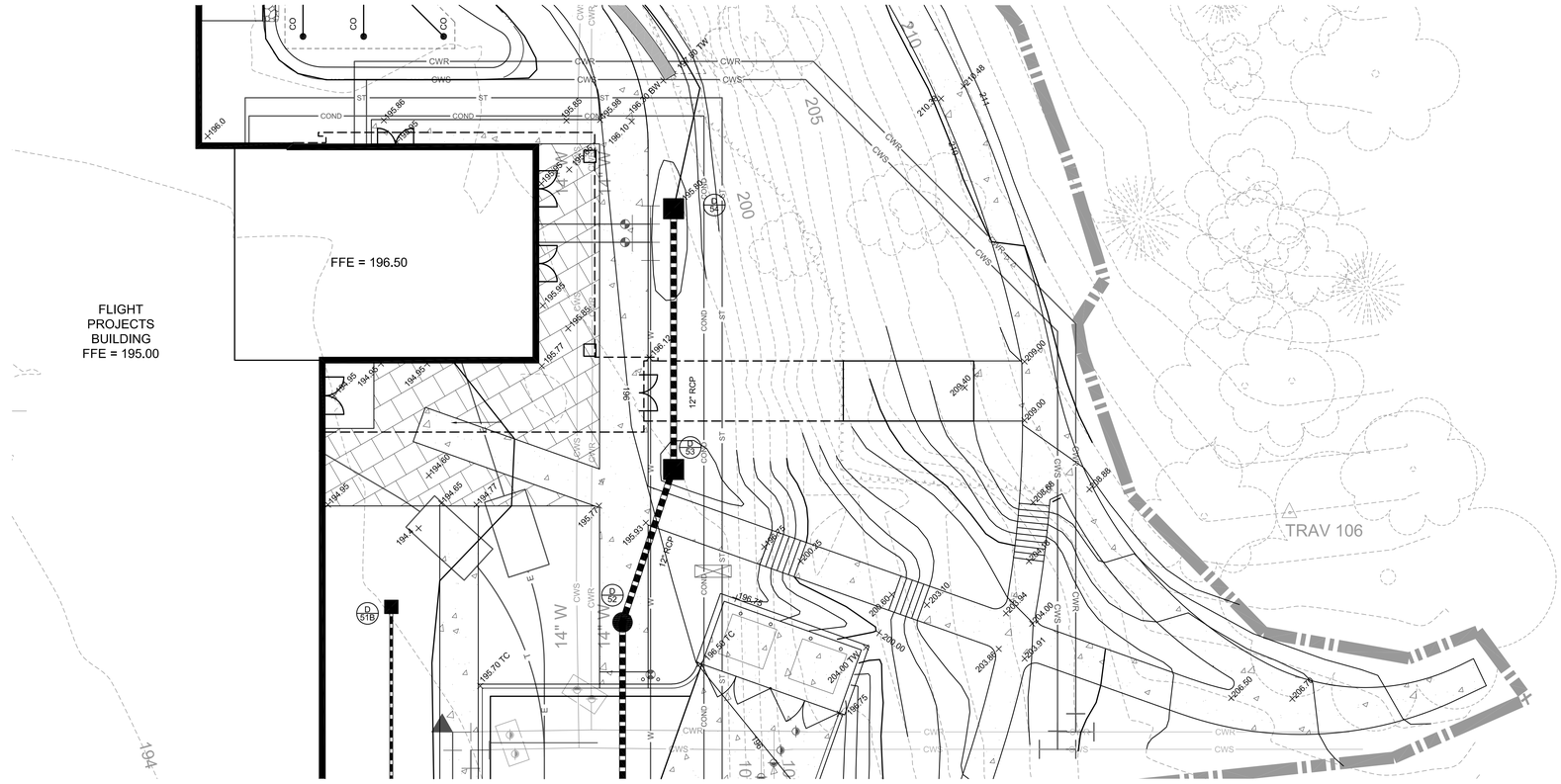

MECHANICAL YARD

SCALE: 1" = 10'

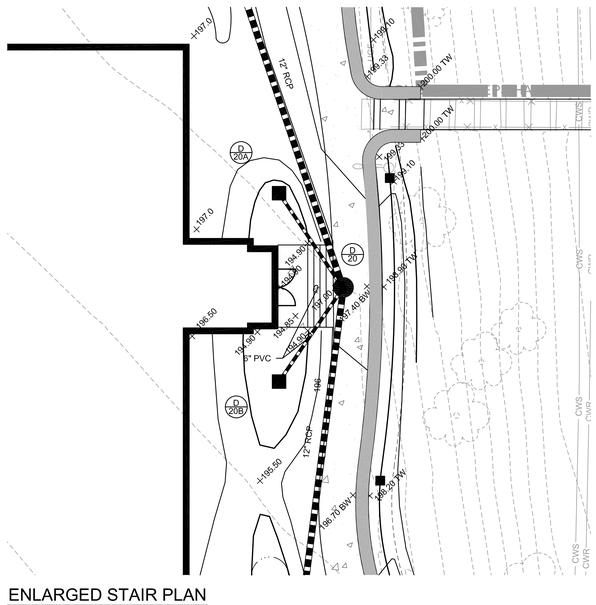

ENLARGED STAIR PLAN

SCALE: 1" = 10'

100% SUBMITTAL

1"=10' 10' 5' 0 10' 20'

AECOM

AECOM TECHNICAL SERVICES, INC.
3101 WILSON BOULEVARD
SUITE 900
ARLINGTON, VA 22201

T: 703-682-4900 F: 703.682.4901
www.aecom.com

SEAL AREA

STATE OF MARYLAND
ERIC P. GUDAT
No. 29282
REGISTERED PROFESSIONAL ENGINEER
10/12/2012

KEY PLAN

REV	DATE	DESCRIPTION	S&R BR.	CUSTOMER	PM	SECT. HEAD

	INITIALS	DATE
DRAWN BY	MLF	06/17/11
CHECKED BY	FM	
A-E MANAGER	EW	
ENVIRONMENTAL BRANCH	JH	
SAFETY BRANCH	CS	
CM	MMD	
PM	RWP	
CUSTOMER	JWB	
ENG. BRANCH	DGL	

SERVICE AREA
ENLARGED PLANS

C-403

FLIGHT PROJECTS BUILDING

NATIONAL AERONAUTICS AND SPACE ADMINISTRATION

GODDARD SPACE FLIGHT CENTER GREENBELT, MARYLAND
FACILITIES MANAGEMENT DIVISION

DATE ISSUED	CoF CODE OR WR#	AECOM PROJECT NO.	SCALE
10/12/2012	12GXAZ	60187636	

FILE DATE: 10/10/2012 14:57:53 PM

File Location: M:\WATER\60190712 GODDARD SPACE FLIGHT CENTER\0001\CADD\DWG\957120_403.DWG
Plotted By: FRAZIER, MICHELLE; Plot Date: Wednesday, October 10, 2012; Plot CTB File: ----; Page Setup Name: ----; InsUnits: 2; LTScale: 1.00 Measurement: 0;

EROSION AND SEDIMENT CONTROL NOTES

THE WATER MANAGEMENT ADMINISTRATION REQUIRES THAT THESE NOTES, IN THEIR ENTIRETY, BE INCLUDED ON THE EROSION AND SEDIMENT CONTROL PLAN. IT IS RECOGNIZED THAT EVERY NOTE MAY NOT APPLY TO ALL PROJECTS. THE REQUIREMENT OF ANY INDIVIDUAL NOTE NOT APPLICABLE TO THE SUBJECT PROJECT IS NOT BINDING UPON THE APPLICANT OR THE APPLICANT'S CONTRACTOR.

1. THE CONTRACTOR SHALL NOTIFY THE ADMINISTRATION (WMA) AT (410) 537-3510 SEVEN (7) DAYS BEFORE COMMENCING ANY LAND DISTURBING ACTIVITY AND, UNLESS WAIVED BY THE ADMINISTRATION, SHALL BE REQUIRED TO HOLD A PRE-CONSTRUCTION MEETING BETWEEN PROJECT REPRESENTATIVES AND A REPRESENTATIVE OF WMA.

2. THE CONTRACTOR MUST NOTIFY WMA IN WRITING AND BY TELEPHONE AT THE FOLLOWING POINTS:

   A. THE REQUIRED PRE-CONSTRUCTION MEETING.
   B. FOLLOWING INSTALLATION OF SEDIMENT CONTROL MEASURES.
   C. DURING THE INSTALLATION OF SEDIMENT BASINS (TO BE CONVERTED INTO PERMANENT STORMWATER MANAGEMENT STRUCTURES) AT THE REQUIRED INSPECTION POINTS (SEE INSPECTION CHECKLIST ON PLAN). NOTIFICATION PRIOR TO COMMENCING CONSTRUCTION OF EACH STEP IS MANDATORY.
   D. PRIOR TO REMOVAL OR MODIFICATION OF ANY SEDIMENT CONTROL STRUCTURE(S).
   E. PRIOR TO REMOVAL OF ALL SEDIMENT CONTROL DEVICES.
   F. PRIOR TO FINAL ACCEPTANCE.

3. THE CONTRACTOR SHALL CONSTRUCT ALL EROSION AND SEDIMENT CONTROL MEASURES PER THE APPROVED PLAN AND CONSTRUCTION SEQUENCE AND SHALL HAVE THEM INSPECTED AND APPROVED BY THE AGENCY INSPECTOR OR WMA INSPECTOR PRIOR TO BEGINNING ANY OTHER LAND DISTURBANCES. MINOR SEDIMENT CONTROL DEVICE LOCATION ADJUSTMENTS MAY BE MADE IN THE FIELD WITH THE APPROVAL OF THE WMA INSPECTOR. THE CONTRACTOR SHALL ENSURE THAT ALL RUNOFF FROM DISTURBED AREAS IS DIRECTED TO THE SEDIMENT CONTROL DEVICES AND SHALL NOT REMOVE ANY EROSION OR SEDIMENT CONTROL MEASURE WITHOUT PRIOR PERMISSION FROM WMA INSPECTOR AND AGENCY INSPECTOR. THE CONTRACTOR MUST OBTAIN PRIOR AGENCY AND WMA APPROVAL FOR CHANGES TO THE SEDIMENT CONTROL PLAN AND / OR SEQUENCE OF CONSTRUCTION.

4. THE CONTRACTOR SHALL PROTECT ALL POINTS OF CONSTRUCTION INGRESS AND EGRESS TO PREVENT THE DEPOSITION OF MATERIALS ONTO PUBLIC ROADS. ALL MATERIALS DEPOSITED ONTO PUBLIC ROADS SHALL BE REMOVED IMMEDIATELY.

5. THE CONTRACTOR SHALL INSPECT DAILY AND MAINTAIN CONTINUOUSLY IN AN EFFECTIVE OPERATING CONDITION ALL EROSION AND SEDIMENT CONTROL MEASURES UNTIL SUCH TIMES AS THEY ARE REMOVED WITH PRIOR PERMISSION FROM WMA INSPECTOR AND AGENCY INSPECTOR.

6. ALL SEDIMENT BASINS, TRAP EMBANKMENTS AND SLOPES, PERIMETER DIKES, SWALES AND ALL DISTURBED SLOPES STEEPER OR EQUAL TO 3:1 SHALL BE STABILIZED WITH SOD OR SEED AND ANCHORED STRAW MULCH, OR OTHER APPROVED STABILIZATION MEASURES, AS SOON AS POSSIBLE BUT NO LATER THAN SEVEN (7) CALENDAR DAYS AFTER ESTABLISHMENT. ALL AREAS DISTURBED OUTSIDE OF THE PERIMETER SEDIMENT CONTROL SYSTEM MUST BE MINIMIZED. MAINTENANCE MUST BE PERFORMED AS NECESSARY TO ENSURE CONTINUED STABILIZATION. (REQUIREMENT FOR STABILIZATION MAY BE REDUCED TO THREE (3) DAYS FOR SENSITIVE AREAS.)

7. THE CONTRACTOR SHALL APPLY SOD OR SEED AND ANCHORED STRAW MULCH, OR OTHER APPROVED STABILIZATION MEASURES TO ALL DISTURBED AREAS AND STOCKPILES WITHIN FOURTEEN (14) CALENDAR DAYS AFTER STRIPPING AND GRADING ACTIVITIES HAVE CEASED IN THE AREA. MAINTENANCE SHALL BE PERFORMED AS NECESSARY TO ENSURE CONTINUED STABILIZATION. (REQUIREMENT MAY BE REDUCED TO SEVEN (7) DAYS FOR SENSITIVE AREAS.)

8. PRIOR TO REMOVAL OF SEDIMENT CONTROL MEASURES, THE CONTRACTOR SHALL STABILIZE AND HAVE ESTABLISHED PERMANENT STABILIZATION FOR ALL CONTRIBUTORY DISTURBED AREAS USING SOD OR AN APPROVED PERMANENT SEED MIXTURE WITH REQUIRED SOIL AMENDMENTS AND AN APPROVED ANCHORED MULCH. WOOD FIBER MULCH MAY ONLY BE USED IN SEEDING SEASON WHERE THE SLOPE DOES NOT EXCEED 10% AND GRADING HAS BEEN DONE TO PROMOTE SHEET FLOW DRAINAGE. AREAS BROUGHT TO FINISHED GRADE DURING THE SEEDING SEASON SHALL BE PERMANENTLY STABILIZED AS SOON AS POSSIBLE, BUT NOT LATER THAN FOURTEEN (14) CALENDAR DAYS AFTER ESTABLISHMENT. WHEN PROPERTY IS BROUGHT TO FINISHED GRADE DURING THE MONTHS OF NOVEMBER THROUGH FEBRUARY, AND PERMANENT STABILIZATION IS FOUND TO BE IMPRACTICAL, TEMPORARY SEED AND ANCHORED STRAW MULCH SHALL BE APPLIED TO DISTURBED AREAS. THE FINAL PERMANENT STABILIZATION OF SUCH PROPERTY SHALL BE APPLIED BY MARCH 15 OR EARLIER IF GROUND AND WEATHER CONDITIONS ALLOW.

9. THE SITE'S APPROVAL LETTER, APPROVED EROSION AND SEDIMENT CONTROL PLANS, DAILY LOG BOOKS, AND TEST REPORTS SHALL BE AVAILABLE AT THE SITE FOR INSPECTION BY DULY AUTHORIZED OFFICIALS OF WMA AND THE AGENCY RESPONSIBLE FOR PROJECT.

10. SURFACE DRAINAGE FLOWS OVER UNSTABILIZED CUT AND FILL SLOPES SHALL BE CONTROLLED BY EITHER PREVENTING DRAINAGE FLOWS FROM TRAVERSING THE SLOPES OR BY INSTALLING PROTECTIVE DEVICES TO LOWER THE WATER DOWNSLOPE WITHOUT CAUSING EROSION. DIKES SHALL BE INSTALLED AND MAINTAINED AT THE TOP OF A CUT OR FILL SLOPE UNTIL THE SLOPE AND DRAINAGE AREA TO IT ARE FULLY STABILIZED, AT WHICH TIME THEY MUST BE REMOVED AND FINAL GRADING DONE TO PROMOTE SHEET FLOW DRAINAGE. PROTECTIVE METHODS MUST BE PROVIDED AT POINTS OF CONCENTRATED FLOW WHERE EROSION IS LIKELY TO OCCUR.

11. PERMANENT SWALES OR OTHER POINTS OF CONCENTRATED WATER FLOW SHALL BE STABILIZED WITH SOD OR SEED WITH AN APPROVED EROSION CONTROL MATTING, RIP-RAP, OR BY OTHER APPROVED STABILIZATION MEASURES.

12. TEMPORARY SEDIMENT CONTROL DEVICES MAY BE REMOVED, WITH PERMISSION OF WMA INSPECTOR AND AGENCY INSPECTORS, WITHIN THIRTY (30) CALENDAR DAYS FOLLOWING ESTABLISHMENT OF PERMANENT STABILIZATION IN ALL CONTRIBUTORY DRAINAGE AREAS. STORMWATER MANAGEMENT STRUCTURES USED TEMPORARILY FOR SEDIMENT CONTROL SHALL BE CONVERTED TO THE PERMANENT CONFIGURATION WITHIN THIS TIME PERIOD AS WELL.

13. NO PERMANENT CUT OR FILL SLOPE WITH A GRADIENT STEEPER THAN 3:1 WILL BE PERMITTED IN LAWN MAINTENANCE AREAS. A SLOPE GRADIENT OF UP TO 2:1 WILL BE PERMITTED IN NON-MAINTENANCE AREAS PROVIDED THAT THOSE AREAS ARE INDICATED ON THE EROSION AND SEDIMENT CONTROL PLAN WITH A LOW-MAINTENANCE GROUND COVER SPECIFIED FOR PERMANENT STABILIZATION. SLOPE GRADIENT STEEPER THAN 2:1 WILL NOT BE PERMITTED WITH VEGETATIVE STABILIZATION.

14. FOR FINISHED GRADING, THE CONTRACTOR SHALL PROVIDE ADEQUATE GRADIENTS TO PREVENT WATER FROM PONDING FOR MORE THAN TWENTY FOUR (24) HOURS AFTER THE END OF A RAINFALL EVENT. DRAINAGE COURSES AND SWALE FLOW AREAS MAY TAKE AS LONG AS FORTY-EIGHT (48) HOURS AFTER THE END OF A RAINFALL EVENT TO DRAIN. AREAS DESIGNED TO HAVE STANDING WATER SHALL NOT BE REQUIRED TO MEET THIS REQUIREMENT.

15. SEDIMENT TRAPS OR BASINS ARE NOT PERMITTED WITHIN 20 FEET OF A FOUNDATION THAT EXIST OR IS UNDER CONSTRUCTION. NO STRUCTURE MAY BE CONSTRUCTED WITHIN 20 FEET OF AN ACTIVE SEDIMENT TRAP OR BASIN.

16. THE WMA INSPECTOR HAS THE OPTION OF REQUIRING ADDITIONAL SAFETY OR SEDIMENT CONTROL MEASURES, IF DEEMED NECESSARY.

17. ALL TRAP DEPTH DIMENSIONS ARE RELATIVE TO THE OUTLET ELEVATION. ALL TRAPS MUST HAVE A STABLE OUTFALL. ALL TRAPS AND BASINS SHALL HAVE STABLE INFLOW POINTS.

18. VEGETATIVE STABILIZATION SHALL BE PERFORMED IN ACCORDANCE WITH THE STANDARDS AND SPECIFICATIONS FOR SOIL EROSION AND SEDIMENT CONTROL. REFER TO APPROPRIATE SPECIFICATIONS FOR TEMPORARY SEEDING, PERMANENT SEEDING, MULCHING, SODDING, AND GROUND COVERS.

19. SEDIMENT SHALL BE REMOVED AND THE TRAP OR BASIN RESTORED TO ITS ORIGINAL DIMENSIONS WHEN THE SEDIMENT HAS ACCUMULATED TO ONE QUARTER OF THE TOTAL DEPTH OF THE TRAP OR BASIN. TOTAL DEPTH SHALL BE MEASURED FROM THE TRAP OR BASIN BOTTOM TO THE CREST OF THE OUTLET.

20. SEDIMENT REMOVED FROM TRAPS (AND BASINS) SHALL BE PLACED AND STABILIZED IN APPROVED AREAS, BUT NOT WITHIN A FLOODPLAIN, WETLAND OR TREE-SAVE AREA. WHEN PUMPING SEDIMENT LADEN WATER, THE DISCHARGE MUST BE DIRECTED TO A SEDIMENT TRAPPING DEVICE PRIOR TO RELEASE FROM THE SITE. A SUMP PIT MAY BE USED IF SEDIMENT TRAPS THEMSELVES ARE BEING PUMPED OUT.

21. ALL WATER REMOVED FROM EXCAVATED AREAS (E.G. UTILITY TRENCHES) SHALL BE PASSED THROUGH AN APPROVED DEWATERING PRACTICE OR PUMPED TO A SEDIMENT TRAP OR BASIN PRIOR TO DISCHARGE FROM THE SITE (I.E. VIA FUNCTIONAL STORM DRAIN SYSTEM OR TO STABLE GROUND SURFACE).

22. SEDIMENT CONTROL FOR UTILITY CONSTRUCTION FOR AREAS OUTSIDE OF DESIGNED CONTROLS OR AS DIRECTED BY ENGINEER OR WMA INSPECTOR:

A. CALL "MISS UTILITY" AT 1-800-257-7777 48 HOURS PRIOR TO THE START OF WORK.
B. EXCAVATED TRENCH MATERIAL SHALL BE PLACED ON THE HIGH SIDE OF THE TRENCH.
C. TRENCHES FOR UTILITY INSTALLATION SHALL BE BACKFILLED, COMPACTED, AND STABILIZED AT THE END OF EACH WORKING DAY. NO MORE TRENCH SHALL BE OPENED THAN CAN BE COMPLETED THE SAME DAY, UNLESS;
D. TEMPORARY SILT FENCE SHALL BE PLACED IMMEDIATELY DOWNSTREAM OF ANY DISTURBED AREA INTENDED TO REMAIN DISTURBED FOR MORE THAN ONE DAY.

23. WHERE DEEMED APPROPRIATE BY THE ENGINEER OR INSPECTOR, SEDIMENT BASINS AND TRAPS MAY NEED TO BE SURROUNDED WITH AN APPROVED SAFETY FENCE. THE FENCE MUST CONFORM TO LOCAL ORDINANCES AND REGULATIONS. THE DEVELOPER OR OWNER SHALL CHECK WITH LOCAL BUILDING OFFICIALS ON APPLICABLE SAFETY REQUIREMENTS. WHERE SAFETY FENCE IS DEEMED APPROPRIATE AND LOCAL ORDINANCES DO NOT SPECIFY FENCING SIZES AND TYPES, THE FOLLOWING SHALL BE USED AS A MINIMUM STANDARD: THE SAFETY FENCE MUST BE MADE OF WELDED WIRE AND AT LEAST 42 INCHES HIGH, HAVE POSTS SPACED NO FARTHER APART THAN 8 FEET, HAVE MESH OPENINGS NO GREATER THAN 2 INCHES IN WIDTH AND 4 INCHES IN HEIGHT WITH A MINIMUM OF 14 GAUGE WIRE. SAFETY FENCE MUST BE MAINTAINED AND IN GOOD CONDITION AT ALL TIMES.

24. OFF-SITE SPOIL OR BORROW AREAS ON STATE OR FEDERAL PROPERTY MUST HAVE PRIOR APPROVAL BY WMA AND OTHER APPLICABLE STATE, FEDERAL, AND LOCAL AGENCIES; OTHERWISE APPROVAL MUST BE GRANTED BY THE LOCAL AUTHORITIES. ALL WASTE AND BORROW AREAS OFF-SITE MUST BE PROTECTED BY SEDIMENT CONTROL MEASURES AND STABILIZED.

25. SITES WHERE INFILTRATION DEVICES ARE USED FOR THE CONTROL OF STORMWATER, EXTREME CARE MUST BE TAKEN TO PREVENT RUNOFF FROM UNSTABILIZED AREAS FROM ENTERING THE STRUCTURE DURING CONSTRUCTION. SEDIMENT CONTROL DEVICES PLACED IN INFILTRATION AREAS MUST HAVE BOTTOM ELEVATIONS AT LEAST TWO (2) FEET HIGHER THAN THE FINISH GRADE BOTTOM ELEVATION OF THE INFILTRATION PRACTICE. WHEN CONVERTING A SEDIMENT TRAP TO AN INFILTRATION DEVICE, ALL ACCUMULATED SEDIMENT MUST BE REMOVED AND DISPOSED OF PRIOR TO FINAL GRADING OF INFILTRATION DEVICE.

26. WHEN A STORM DRAIN SYSTEM OUTFALL IS DIRECTED TO A SEDIMENT TRAP OR SEDIMENT BASIN AND THE SYSTEM IS TO BE USED FOR TEMPORARILY CONVEYING SEDIMENT LADEN WATER, ALL STORM DRAIN INLETS IN NON-SUMP AREAS SHALL HAVE TEMPORARY ASPHALT BERMS CONSTRUCTED AT THE TIME OF BASE PAVING TO DIRECT GUTTER FLOW INTO THE INLETS TO AVOID SURCHARGING AND OVERFLOW OF INLETS IN SUMP AREAS.

27. SITE INFORMATION:

A. TOTAL AREA OF FACILITY (BASE, CAMPUS, PARK, ETC.)	1,270	ACRES
B. TOTAL AREA OF PROJECT SITE (BLDG & PARKING)	10.0	ACRES
C. AREA DISTURBED	~~7.2~~ 5.5	ACRES
D. AREA TO BE ROOFED OR PAVED	~~4.5~~ 3.8	ACRES
E. TOTAL CUT	2,860	CUBIC YARDS
F. TOTAL FILL	9,660	CUBIC YARDS
G. OFF-SITE WASTE / BORROW AREA LOCATION	TBD	

PROFESSIONAL CERTIFICATION:

I HEREBY CERTIFY THAT THESE DOCUMENTS WERE PREPARED OR APPROVED BY ME, AND THAT I AM A DULY LICENSED PROFESSIONAL ENGINEER UNDER THE LAWS OF THE STATE OF MARYLAND.

NAME (PRINTED) ____ SIGNATURE ____ DATE ____

MARYLAND LICENSE NUMBER ____ EXPIRATION DATE ____

DESIGN CERTIFICATION:

I HEREBY CERTIFY THAT THIS PLAN HAS BEEN DESIGNED IN ACCORDANCE WITH THE 1994 MARYLAND STANDARDS AND SPECIFICATIONS FOR SOIL EROSION AND SEDIMENT CONTROL , THE 2000 MARYLAND STORMWATER DESIGN MANUAL, VOLUMES I & II AND THE MARYLAND DEPARTMENT OF THE ENVIRONMENT EROSION AND SEDIMENT CONTROL AND STORMWATER MANAGEMENT REGULATIONS

NAME (PRINTED) ____ SIGNATURE ____

MARYLAND REGISTRATION NUMBER
P.E., R.L.S. OR R.L.A. (CIRCLE) ____ DATE ____

OWNER/DEVELOPER'S CERTIFICATION:

"I/WE HEREBY CERTIFY THAT ALL CLEARING, GRADING, CONSTRUCTION AND/OR DEVELOPMENT WILL BE DONE PURSUANT TO THIS PLAN AND THAT ANY RESPONSIBLE PERSONNEL INVOLVED IN THE CONSTRUCTION PROJECT WILL HAVE A CERTIFICATE OF ATTENDANCE AT A MARYLAND DEPARTMENT OF THE ENVIRONMENT APPROVED TRAINING PROGRAM FOR THE CONTROL OF SEDIMENT AND EROSION BEFORE BEGINNING THE PROJECT. I HEREBY AUTHORIZE THE RIGHT OF ENTRY FOR PERIODIC ON-SITE EVALUATION BY STATE OF MARYLAND, DEPARTMENT OF THE ENVIRONMENT, COMPLIANCE INSPECTORS."

DATE ____ OWNER/DEVELOPER SIGNATURE ____

CARD NO. ____ PRINTED NAME AND TITLE ____

STANDARD STABILIZATION NOTE

FOLLOWING INITIAL SOIL DISTURBANCES OR REDISTURBANCE, PERMANENT OR TEMPORARY STABILIZATION SHALL BE COMPLETED WITHIN SEVEN (7) CALENDAR DAYS AS TO THE SURFACE OF ALL PERIMETER CONTROLS DIKES, SWALES, DITCHES. PERIMETER SLOPES, AND ALL SLOPES GREATER THAN 3 HORIZONTAL TO 1 VERTICAL (3:1); AND FOURTEEN DAYS (14) AS TO ALL OTHER DISTURBED OR GRADED AREAS ON THE PROJECT SITE.

NOTES THIS SHEET:

1. INFORMATION PROVIDED IS FOR MDE PERMITTING ONLY. CONTRACTOR SHALL VERIFY THE QUANTITY OF SPOIL MATERIALS.
2. THIS PROJECT WILL HAVE NPDES CONSTRUCTION ACTIVITY PERMIT COVERAGE. THE CONTRACTOR SHALL BE REQUIRED TO SIGN THE TRANSFER OF AUTHORIZATION AND ASSUME ALL RESPONSIBILITY ASSOCIATED WITH THE PERMIT.
3. CONTRACTOR SHALL DOCUMENT ALL MDE APPROVED MODIFICATIONS TO THE EROSION & SEDIMENT CONTROL PLANS.
4. ALL INSPECTION RECORDS AND DOCUMENTS SHALL BE KEPT ON SITE AND BE MADE AVAILABLE TO WMA AND AGENCY INSPECTORS.
5. OFF-SITE WASTE/BORROW LOCATION SHALL BE AN MDE APPROVED LOCATION.

100% SUBMITTAL

AECOM
AECOM TECHNICAL SERVICES, INC.
3101 WILSON BOULEVARD
SUITE 900
ARLINGTON, VA 22201
T: 703-682-4900 F: 703.682.4901
www.aecom.com

SEAL AREA
STATE OF MARYLAND
ERIC P. BUCK
No. 26217
REGISTERED
PROFESSIONAL ENGINEER
10/12/2012

KEY PLAN

REV	DATE	DESCRIPTION	S&R BR.	CUSTOMER	PM	SECT. HEAD

	INITIALS	DATE
DRAWN BY	MLF	06/17/11
CHECKED BY	FM	
A-E MANAGER	EW	
ENVIRONMENTAL BRANCH	JH	
SAFETY BRANCH	CS	
CM	MMD	
PM	RWP	
CUSTOMER	JWB	
ENG. BRANCH	DGL	

EROSION & SEDIMENT CONTROL NOTES

C-501

FLIGHT PROJECTS BUILDING

NATIONAL AERONAUTICS AND SPACE ADMINISTRATION
GODDARD SPACE FLIGHT CENTER GREENBELT, MARYLAND
FACILITIES MANAGEMENT DIVISION

DATE ISSUED	CoF CODE OR WR#	AECOM PROJECT NO.	SCALE
10/12/2012	12GXAZ	60187636	

FILE DATE: 10/10/2012 4:12:30 PM

File Location: M:\WATER\60190712 GODDARD SPACE FLIGHT CENTER\0001\CADD\DWG\90712C_501.DWG
Plotted By: FRAZIER, MICHELLE; Plot Date: Wednesday, October 10, 2012; Plot CTB File: ----; Page Setup Name: ----; InsUnits: 2; LTScale: 1.00 Measurement: 0;

SECTION I - VEGETATIVE STABILIZATION METHODS AND MATERIALS

A. SITE PREPARATION

i. INSTALL EROSION AND SEDIMENT CONTROL STRUCTURES (EITHER TEMPORARY OR PERMANENT) SUCH AS DIVERSIONS, GRADE STABILIZATION STRUCTURES, BERMS, WATERWAYS, OR SEDIMENT CONTROL BASINS.

ii. PERFORM ALL GRADING OPERATIONS AT RIGHT ANGLES TO THE SLOPE. FINAL GRADING AND SHAPING IS NOT USUALLY NECESSARY FOR TEMPORARY SEEDING.

iii. SCHEDULE REQUIRED SOIL TESTS TO DETERMINE SOIL AMENDMENT COMPOSITION AND APPLICATION RATES FOR SITES HAVING DISTURBED AREA OVER 5 ACRES.

B. SOIL AMENDMENTS (FERTILIZER AND LIME SPECIFICATIONS)

i. SOIL TESTS MUST BE PERFORMED TO DETERMINE THE EXACT RATIOS AND APPLICATION RATES FOR BOTH LIME AND FERTILIZER ON SITES HAVING DISTURBED AREAS OVER 5 ACRES. SOIL ANALYSIS MAY BE PERFORMED BY THE UNIVERSITY OF MARYLAND OR A RECOGNIZED COMMERCIAL LABORATORY. SOIL SAMPLES TAKEN FOR ENGINEERING PURPOSES MAY ALSO BE USED FOR CHEMICAL ANALYSIS.

ii. FERTILIZERS SHALL BE UNIFORM IN COMPOSITION, FREE FLOWING, AND SUITABLE FOR ACCURATE APPLICATION BY APPROVED EQUIPMENT. MANURE MAY BE SUBSTITUTED FOR FERTILIZER WITH PRIOR APPROVAL FROM THE APPROPRIATE APPROVAL AUTHORITY. FERTILIZERS SHALL BE DELIVERED TO THE SITE, FULLY LABELED ACCORDING TO APPLICABLE STATE FERTILIZER LAWS AND SHALL BEAR THE NAME, TRADE NAME OR TRADEMARK, AND WARRANTY OF THE PRODUCER.

iii. LIME MATERIALS SHALL BE GROUND LIMESTONE (HYDRATED OR BURNT LIME MAY BE SUBSTITUTED) WHICH CONTAINS AT LEAST 50%%% TOTAL OXIDES (CALCIUM OXIDE PLUS MAGNESIUM OXIDE). LIMESTONE SHALL BE GROUND TO SUCH FINENESS THAT AT LEAST 50% WILL PASS THROUGH A #100 MESH SIEVE, AND 98 TO 100% WILL PASS THROUGH A #20 MESH SIEVE.

iv. INCORPORATE LIME AND FERTILIZER INTO THE TOP 3 - 5" OF SOIL BY DISKING OR OTHER SUITABLE MEANS.

C. SEEDBED PREPARATION

i. TEMPORARY SEEDING

a. SEEDBED PREPARATION SHALL CONSIST OF LOOSENING SOIL TO A DEPTH OF 3 INCHES TO 5 INCHES BY MEANS OF SUITABLE AGRICULTURAL OR CONSTRUCTION EQUIPMENT, SUCH AS DISC HARROWS, CHISEL PLOWS, OR RIPPERS MOUNTED ON CONSTRUCTION EQUIPMENT. AFTER THE SOIL IS LOOSENED, IT SHOULD NOT BE ROLLED OR DRAGGED SMOOTH, BUT LEFT IN THE ROUGHENED CONDITION. SLOPED AREAS (GREATER THAN 3:1) SHOULD BE TRACKED BY A DOZER LEAVING THE SURFACE IN AN IRREGULAR CONDITION WITH RIDGES RUNNING PARALLEL TO THE CONTOUR OF THE SLOPE.

b. APPLY FERTILIZER AND LIME AS PRESCRIBED ON THE PLANS.

c. INCORPORATE LIME AND FERTILIZER INTO THE TOP 3 TO 5 INCHES OF SOIL BY DISKING OR OTHER SUITABLE MEANS.

ii. PERMANENT SEEDING

a. MINIMUM SOIL CONDITIONS REQUIRED FOR PERMANENT VEGETATIVE ESTABLISHMENT:

1. SOIL pH SHALL BE BETWEEN 6.0 AND 7.0.
2. SOLUBLE SALTS SHALL BE LESS THAN 500 PARTS PER MILLION (PPM).
3. THE SOIL SHALL CONTAIN LESS THAN 40% CLAY, BUT ENOUGH FINE GRAINED MATERIAL (>30% SILT PLUS CLAY) TO PROVIDE THE CAPACITY TO HOLD A MODERATE AMOUNT OF MOISTURE. AN EXCEPTION IS IF LOVEGRASS OR SERECIA LESPEDEZA IS TO BE PLANTED, THEN A SANDY SOIL (<30% SILT PLUS CLAY) WOULD BE ACCEPTABLE.
4. SOIL SHALL CONTAIN 1.5% MINIMUM ORGANIC MATTER BY WEIGHT.
5. SOIL MUST CONTAIN SUFFICIENT PORE SPACE TO PERMIT ADEQUATE ROOT PENETRATION.
6. IF THESE CONDITIONS CANNOT BE MET BY SOILS ON SITE, ADDING TOPSOIL IS REQUIRED IN ACCORDANCE WITH SECTION 21 "STANDARD AND SPECIFICATION FOR TOPSOIL" OF THE 1994 MD STANDARDS AND SPECIFICATIONS FOR SOIL EROSION AND SEDIMENT CONTROL BY THE MARYLAND DEPARTMENT OF THE ENVIRONMENT.

b. AREAS PREVIOUSLY GRADED IN CONFORMANCE WITH THE DRAWINGS SHALL BE MAINTAINED IN A TRUE AND EVEN GRADE, THEN SCARIFIED OR OTHERWISE LOOSENED TO A DEPTH OF 3 TO 5 INCHES TO PERMIT BONDING OF THE TOPSOIL TO THE SURFACE AREA AND TO CREATE HORIZONTAL EROSION CHECK SLOTS TO PREVENT TOPSOIL FROM SLIDING DOWN A SLOPE.

c. APPLY SOIL AMENDMENTS AS PER SOIL TEST OR AS INCLUDED IN THE CONTRACT DOCUMENTS.

d. MIX SOIL AMENDMENTS INTO THE TOP 3 - 5 INCHES OF TOPSOIL BY DISKING OR OTHER SUITABLE MEANS. LAWN AREAS SHOULD BE RAKED TO SMOOTH THE SURFACE; REMOVE LARGE OBJECTS LIKE STONES AND BRANCHES, AND READY THE AREA FOR SEED APPLICATION. WHERE SITE CONDITIONS WILL NOT PERMIT NORMAL SEEDBED PREPARATION, LOOSEN SURFACE SOIL BY DRAGGING WITH A HEAVY CHAIN OR OTHER EQUIPMENT TO ROUGHEN THE SURFACE. STEEP SLOPES (STEEPER THAN 3:1) SHOULD BE TRACKED BY A DOZER LEAVING THE SOIL IN AN IRREGULAR CONDITION WITH RIDGES RUNNING PARALLEL TO THE CONTOUR OF THE SLOPE. THE TOP 1-3 INCHES OF SOIL SHOULD BE LOOSE AND FRIABLE. SEEDBED LOOSENING MAY NOT BE NECESSARY ON NEWLY DISTURBED AREAS.

D. SEED SPECIFICATIONS

i. ALL SEED MUST MEET THE REQUIREMENTS OF THE MARYLAND STATE SEED LAW. ALL SEED SHALL BE SUBJECT TO RE-TESTING BY A RECOGNIZED SEED LABORATORY. ALL SEED USED SHALL HAVE BEEN TESTED WITHIN 6 MONTHS IMMEDIATELY PRECEDING THE DATE OF SOWING SUCH MATERIAL ON THIS JOB.

NOTE: SEED TAGS SHALL BE MADE AVAILABLE TO THE INSPECTOR TO VERIFY TYPE AND RATE OF SEED USED.

ii. INOCULANT - THE INOCULANT FOR TREATING LEGUME SEED IN THE SEED MIXTURES SHALL BE A PURE CULTURE OF NITROGEN-FIXING BACTERIA PREPARED SPECIFICALLY FOR THE SPECIES. INOCULANTS SHALL NOT BE USED LATER THAN THE DATE INDICATED ON THE CONTAINER. ADD FRESH INOCULANT AS DIRECTED ON PACKAGE. USE FOUR TIMES THE RECOMMENDED RATE WHEN HYDROSEEDING. IT IS VERY IMPORTANT TO KEEP INOCULANT AS COOL AS POSSIBLE UNTIL USED. TEMPERATURES ABOVE 75 - 80 DEGREES FAHRENHEIT CAN WEAKEN BACTERIA AND MAKE INOCULANT LESS EFFECTIVE.

E. METHODS OF SEEDING

i. DRY SEEDING: THIS INCLUDES USE OF CONVENTIONAL DROP OR BROADCAST SPREADERS

a. SEED SPREAD SHALL BE INCORPORATED INTO THE SUBSOIL AT THE RATES PRESCRIBED ON THE TEMPORARY OR PERMANENT SEEDING SUMMARIES. THE SEEDED AREA SHALL THEN BE ROLLED WITH A WEIGHTED ROLLER TO PROVIDE GOOD SEED TO SOIL CONTACT.

b. WHERE PRACTICAL, SEED SHOULD BE APPLIED IN TWO DIRECTIONS PERPENDICULAR TO EACH OTHER. APPLY HALF THE SEEDING RATE IN EACH DIRECTION.

ii. DRILL OR CULTIPACKER SEEDING: MECHANIZED SEEDERS THAT APPLY AND COVER SEED WITH SOIL.

a. CULTIPACKING SEEDERS ARE REQUIRED TO BURY THE SEED IN SUCH A FASHION AS TO PROVIDE AT LEAST 1/4 INCH OF SOIL COVERING. SEEDBED MUST BE FIRM AFTER PLANTING.

b. WHERE PRACTICAL, SEED SHOULD BE APPLIED IN TWO DIRECTIONS PERPENDICULAR TO EACH OTHER. APPLY HALF THE SEEDING RATE IN EACH DIRECTION.

F. MULCH SPECIFICATIONS (IN ORDER OF PREFERENCE)

i. STRAW SHALL CONSIST OF THOROUGHLY THRESHED WHEAT, RYE OR OAT STRAW, REASONABLY BRIGHT IN COLOR, AND SHALL NOT BE MUSTY, MOLDY, CAKED, DECAYED, OR EXCESSIVELY DUSTY, AND SHALL BE FREE OF NOXIOUS WEED SEEDS AS SPECIFIED IN THE MARYLAND SEED LAW.

NOTE: ONLY STERILE STRAW MULCH SHOULD BE USED IN AREAS WHERE A STAND OF ONE SPECIES OF GRASS IS DESIRED.

G. MULCHING SEEDED AREAS - MULCH SHALL BE APPLIED TO ALL SEEDED AREAS IMMEDIATELY AFTER SEEDING.

i. IF GRADING IS COMPLETED OUTSIDE OF THE SEEDING SEASON, MULCH ALONE SHALL BE APPLIED AND PRESCRIBED IN THIS SECTION AND MAINTAINED UNTIL THE SEEDING SEASON RETURNS, AND SEEDING CAN BE PERFORMED IN ACCORDANCE WITH THESE SPECIFICATIONS.

ii. WHEN STRAW MULCH IS USED, IT SHALL BE SPREAD OVER ALL SEEDED AREAS AT THE RATE OF 2 TONS/ACRE. MULCH SHALL BE APPLIED TO A UNIFORM LOOSE DEPTH OF BETWEEN 1 AND TWO INCHES. MULCH APPLIED SHALL ACHIEVE A UNIFORM DISTRIBUTION AND DEPTH SO THAT THE SOIL SURFACE IS NOT EXPOSED. IF A MULCH ANCHORING TOOL IS TO BE USED, THE RATE SHOULD BE INCREASED TO 2.5 TONS/ACRE.

H. SECURING STRAW MULCH (MULCH ANCHORING): MULCH ANCHORING SHALL BE PERFORMED IMMEDIATELY FOLLOWING MULCH APPLICATION TO MINIMIZE LOSS BY WIND OR WATER. THIS MAY BE DONE BY ONE OF THE FOLLOWING METHODS (LISTED BY PREFERENCE), DEPENDING UPON SIZE OF AREA AND EROSION HAZARD.

ij. APPLICATIONS OF LIQUID BINDERS SHOULD BE APPLIED HEAVIER AT EDGES WHERE WIND CATCHES MULCH, SUCH AS IN VALLEYS AND ON CRESTS OF BANKS. THE REMAINDER OF AREA SHOULD BE UNIFORM AFTER BINDER APPLICATION. SYNTHETIC BINDERS - SYNTHETIC BINDERS SUCH AS ACRYLIC DRL (AGRO-TACK), DCA-70, PETROSET, TERRA TAX II, TERRA TACK AR, OR OTHER APPROVED EQUAL MAY BE USED AT RATES RECOMMENDED BY THE MANUFACTURER TO ANCHOR

ii. LIGHTWEIGHT: PLASTIC NETTING MAY BE STAPLED OVER THE MULCH ACCORDING TO MANUFACTURER'S RECOMMENDATIONS. NETTING IS USUALLY AVAILABLE IN ROLLS 4 TO 15 FEET WIDE AND 300 TO 3,000 FEET LONG.

I. TURF GRASS ESTABLISHMENT

i. AREAS WHERE TURFGRASS MAY BE DESIRED INCLUDE LAWNS, PARKS, PLAYGROUNDS, AND COMMERCIAL SITES WHICH WILL RECEIVE A MEDIUM TO HIGH LEVEL OF MAINTENANCE. AREAS TO RECEIVE SEED SHALL BE TILLED BY DISKING OR OTHER APPROVED METHODS TO A DEPTH OF 2 TO 4 INCHES, LEVELED AND RAKED TO PREPARE A PROPER SEEDBED. STONES AND DEBRIS OVER 1 1/2 INCHES IN DIAMETER SHALL BE REMOVED. THE RESULTING SEEDBED SHALL BE IN SUCH CONDITION THAT FUTURE MOWING OF GRASSES WILL POSE NO DIFFICULTY.

NOTE: CHOOSE CERTIFIED MATERIAL. CERTIFIED MATERIAL IS THE BEST GUARANTEE OF CULTIVAR PURITY. THE CERTIFICATION PROGRAM OF THE MARYLAND DEPARTMENT OF AGRICULTURE, TURF AND SEED SECTION, PROVIDES A RELIABLE MEANS OF CONSUMER PROTECTION AND ASSURES A PURE GENETIC LINE.

ii. TURFGRASS MIXTURES

b. TALL FESCUE/KENTUCKY BLUEGRASS - FULL SUN MIXTURE - FOR USE IN DROUGHT PRONE AREAS AND/OR FOR AREAS RECEIVING LOW TO MEDIUM MANAGEMENT IN FULL SUN TO MEDIUM SHADE. RECOMMENDED MIXTURE INCLUDES; CERTIFIED TALL FESCUE CULTIVARS 95 - 100%, CERTIFIED KENTUCKY BLUEGRASS CULTIVARS 0 - 5%. SEEDING RATE: 5 TO 8 LB/1000 SF. ONE OR MORE CULTIVARS MAY BE BLENDED.

NOTE: TURFGRASS VARIETIES SHOULD BE SELECTED FROM THOSE LISTED IN THE MOST CURRENT UNIVERSITY OF MARYLAND PUBLICATION, AGRONOMY MIMEO #77, "TURFGRASS CULTIVAR RECOMMENDATIONS FOR MARYLAND".

iii. IDEAL TIMES OF SEEDING

WESTERN MD: MARCH 15 - JUNE 1, AUGUST 1 - OCTOBER 1
(HARDINESS ZONES - 5b, 6a)

CENTRAL MD: MARCH 1 - MAY 15, AUGUST 15 - OCTOBER 15
(HARDINESS ZONES - 6b)

SOUTHERN MD, EASTERN SHORE: MARCH 1 - MAY 15, AUGUST 15 - OCTOBER 15
(HARDINESS ZONES - 7a, 7b)

SECTION II - TEMPORARY SEEDING

VEGETATION - ANNUAL GRASS OR GRAIN USED TO PROVIDE COVER ON DISTURBED AREAS FOR UP TO TWELVE MONTHS. FOR LONGER DURATION OF VEGETATIVE COVER, PERMANENT SEEDING IS REQUIRED.

TEMPORARY SEEDING SUMMARY

SEED MIXTURE (HARDINESS ZONE 7a) (FROM TABLE B.1)					FERTILIZER RATE (10-20-20)	LIME RATE
NO.	SPECIES	APPLICATION RATE (lb/ac)	DATE	SEEDING DEPTHS		
	BARLEY (COOL SEASON)	96	2-15 TO 4-30, 8-15 TO 11-30	1 INCH	486 lb/ac (10 lb/1000 st)	2 tons/ac (100 lb/1000 st)
	FOXTAIL MILLET (WARM SEASON)	30	5-1 TO 8-14	0.5 INCH	486 lb/ac (10 lb/1000 st)	2 tons/ac (100 lb/1000 st)

SECTION III - PERMANENT SEEDING

SEEDING GRASS AND LEGUMES TO ESTABLISH GROUND COVER FOR A MINIMUM PERIOD OF ONE YEAR ON DISTURBED AREAS GENERALLY RECEIVING LOW MAINTENANCE.

PERMANENT SEEDING SUMMARY

SEED MIXTURE (HARDINESS ZONE 7a) (FROM TABLE B.3)					FERTILIZER RATE (10-20-20)			
NO.	SPECIES	APPLICATION RATE (lb/ac)	DATE	SEEDING DEPTHS	N	P205	K20	LIME RATE
9	TALL FESCUE	60	2-15 TO 4-30, 8-15 TO 10-31	1/4 TO 1/2 INCH	45 lb/ac (1.0 lb/ 1000 st)	90 lb/ac (2 lb/ 1000 st)	90 lb/ac (2 lb/ 1000 st)	2 tons/ac (90 lb/ 1000 st)
	PERENNIAL RYEGRASS	40	2-15 TO 4-30, 8-15 TO 10-31	1/4 TO 1/2 INCH				
	KENTUCKY BLUEGRASS	20	2-15 TO 4-30, 8-15 TO 10-31	1/4 TO 1/2 INCH				

SECTION IV - SOD TO PROVIDE QUICK COVER ON DISTURBED AREAS (2:1 GRADE OR FLATTER)

A. GENERAL SPECIFICATIONS

i. CLASS OF TURFGRASS SHALL BE MARYLAND OR VIRGINIA STATE CERTIFIED OR APPROVED. SOD LABELS SHALL BE MADE AVAILABLE TO THE JOB FOREMAN AND INSPECTOR.

ii. SOD SHALL BE MACHINE CUT AT A UNIFORM SOIL THICKNESS OF 3/4", PLUS OR MINUS 1/4", AT THE TIME OF CUTTING. MEASUREMENT FOR THICKNESS SHALL EXCLUDE TOP GROWTH AND THATCH. INDIVIDUAL PIECES OF SOD SHALL BE CUT TO THE SUPPLIER'S WIDTH AND LENGTH. MAXIMUM ALLOWABLE DEVIATION FROM STANDARD WIDTHS AND LENGTHS SHALL BE 5 PERCENT. BROKEN PADS AND TORN OR UNEVEN ENDS WILL NOT BE ACCEPTABLE.

iii. STANDARD SIZE SECTIONS OF SOD SHALL BE STRONG ENOUGH TO SUPPORT THEIR OWN WEIGHT AND RETAIN THEIR SIZE AND SHAPE WHEN SUSPENDED VERTICALLY WITH A FIRM GRASP ON THE UPPER 10 PERCENT OF THE SECTION.

iv. SOD SHALL NOT BE HARVESTED OR TRANSPLANTED WHEN MOISTURE CONTENT (EXCESSIVELY DRY OR WET) MAY ADVERSELY AFFECT ITS SURVIVAL.

v. SOD SHALL BE HARVESTED, DELIVERED, AND INSTALLED WITHIN A PERIOD OF 36 HOURS. SOD NOT TRANSPLANTED WITHIN THIS PERIOD SHALL BE APPROVED BY AN AGRONOMIST OR SOIL SCIENTIST PRIOR TO ITS INSTALLATION.

B. SOD INSTALLATION

i. DURING PERIODS OF EXCESSIVELY HIGH TEMPERATURE OR IN AREAS HAVING DRY SUBSOIL, THE SUBSOIL SHALL BE LIGHTLY IRRIGATED IMMEDIATELY PRIOR TO LAYING THE SOD.

ii. THE FIRST ROW OF SOD SHALL BE LAID IN A STRAIGHT LINE WITH SUBSEQUENT ROWS PLACED PARALLEL TO AND TIGHTLY WEDGED AGAINST EACH OTHER. LATERAL JOINTS SHALL BE STAGGERED TO PROMOTE MORE UNIFORM GROWTH AND STRENGTH. ENSURE THAT SOD IS NOT STRETCHED OR OVERLAPPED AND THAT ALL JOINTS ARE BUTTED TIGHT IN ORDER TO PREVENT VOIDS WHICH WOULD CAUSE AIR DRYING OF THE ROOTS.

iii. WHEREVER POSSIBLE, SOD SHALL BE LAID WITH THE LONG EDGES PARALLEL TO THE CONTOUR AND WITH STAGGERING JOINTS. SOD SHALL BE ROLLED AND TAMPED, PEGGED, OR OTHERWISE SECURED TO PREVENT SLIPPAGE ON SLOPES AND TO ENSURE SOLID CONTACT BETWEEN SOD ROOTS AND THE UNDERLYING SOIL SURFACE.

iv. SOD SHALL BE WATERED IMMEDIATELY FOLLOWING ROLLING OR TAMPING UNTIL THE UNDERSIDE OF THE NEW SOD PAD AND SOIL SURFACE BELOW THE SOD ARE THOROUGHLY WET. THE OPERATIONS OF LAYING, TAMPING, AND IRRIGATING FOR ANY PIECE OF SOD SHALL BE COMPLETED WITHIN EIGHT HOURS.

C. SOD MAINTENANCE

i. IN THE ABSENCE OF ADEQUATE RAINFALL, WATERING SHALL BE PERFORMED DAILY OR AS OFTEN AS NECESSARY DURING THE FIRST WEEK AND IN SUFFICIENT QUANTITIES TO MAINTAIN MOIST SOIL TO A DEPTH OF 4". WATERING SHOULD BE DONE DURING THE HEAT OF THE DAY TO PREVENT WILTING.

ii. AFTER THE FIRST WEEK, SOD WATERING IS REQUIRED AS NECESSARY TO MAINTAIN ADEQUATE MOISTURE CONTENT.

iii. THE FIRST MOWING OF SOD SHOULD NOT BE ATTEMPTED UNTIL THE FINAL SOD IS FIRMLY ROOTED. NO MORE THAN 1/3 OF THE GRASS LEAF SHALL BE REMOVED BY THE INITIAL CUTTING OR SUBSEQUENT CUTTINGS. GRASS HEIGHT SHALL BE MAINTAINED BETWEEN 2" AND 3", UNLESS OTHERWISE SPECIFIED.

100% SUBMITTAL

AECOM
AECOM TECHNICAL SERVICES, INC.
3101 WILSON BOULEVARD
SUITE 900
ARLINGTON, VA 22201
T: 703-682-4900 F: 703.682.4901
www.aecom.com

SEAL AREA

STATE OF MARYLAND
ERIC P. EUCH
No. 26
PROFESSIONAL ENGINEER
10/12/2012

KEY PLAN

REV	DATE	DESCRIPTION			S&R BR.	CUSTOMER	PM	SECT. HEAD
			INITIALS	DATE	EROSION & SEDIMENT CONTROL NOTES		C-502	
		DRAWN BY	MLF	06/17/11				
		CHECKED BY	FM					
		A-E MANAGER	EW					
		ENVIRONMENTAL BRANCH	JH					
		SAFETY BRANCH	CS		FLIGHT PROJECTS BUILDING			
		CM	MMD					
		PM	RWP		NATIONAL AERONAUTICS AND SPACE ADMINISTRATION			
		CUSTOMER	JWB		GODDARD SPACE FLIGHT CENTER GREENBELT, MARYLAND FACILITIES MANAGEMENT DIVISION			
		ENG. BRANCH	DGL					
					DATE ISSUED 10/12/2012	CoF CODE OR WR# 12GXAZ	AECOM PROJECT NO. 60187636	SCALE

File Location: M:\WATER\60190712 GODARD SPACE FLIGHT CENTER\0001\CADD\DWG\60712C_502.DWG Page Setup Name: ----; InsUnits: 2; LTScale: 1.00 Measurement: 0;
Plotted By: FRAZIER, MICHELLE; Plot Date: Wednesday, October 10, 2012; Plot CTB File: ----;
FILE DATE: 10/10/2012 1:36:14 PM

DETAIL 22 - SILT FENCE

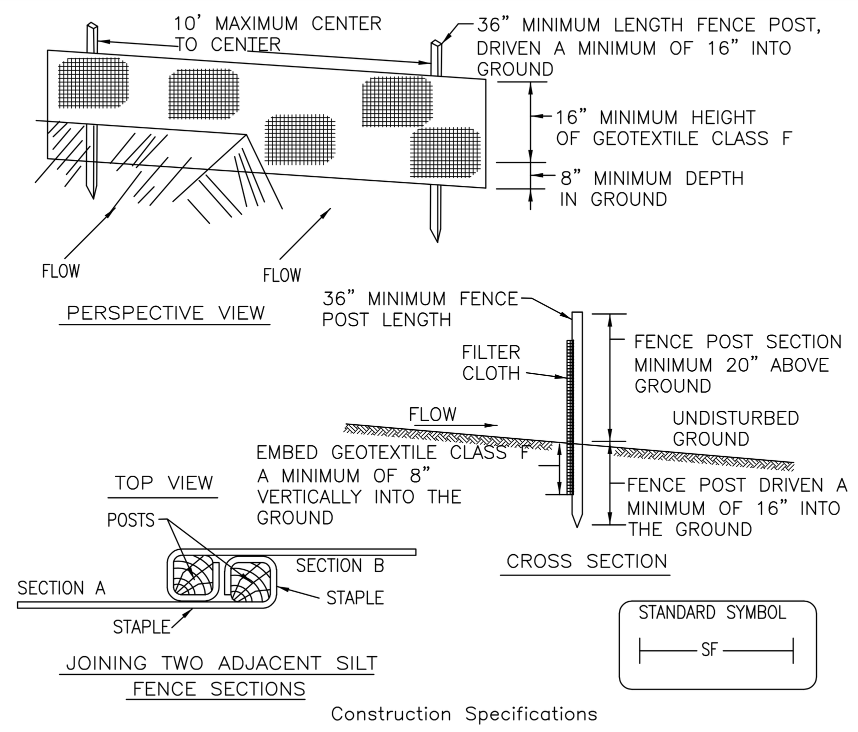

Construction Specifications

1. Fence posts shall be a minimum of 36" long driven 16" minimum into the ground. Wood posts shall be 11/2" x 11/2" square (minimum) cut, or 13/4" diameter (minimum) round and shall be of sound quality hardwood. Steel posts will be standard T or U section weighting not less than 1.00 pond per linear foot.
2. Geotextile shall be fastened securely to each fence post with wire ties or staples at top and mid-section and shall meet the following requirements for Geotextile Class F:

Tensile Strength	50 lbs/in (min.)	Test: MSMT 509
Tensile Modulus	20 lbs/in (min.)	Test: MSMT 509
Flow Rate	0.3 gal ft / minute (max.)	Test: MSMT 322
Filtering Efficiency	75% (min.)	Test: MSMT 322

3. Where ends of geotextile fabric come together, they shall be overlapped, folded and stapled to prevent sediment bypass.
4. Silt Fence shall be inspected after each rainfall event and maintained when bulges occur or when sediment accumulation reached 50% of the fabric height.

U.S. DEPARTMENT OF AGRICULTURE SOIL CONSERVATION SERVICE	PAGE E-15-3	MARYLAND DEPARTMENT OF ENVIRONMENT WATER MANAGEMENT ADMINISTRATION

DETAIL 33 - SUPER SILT FENCE

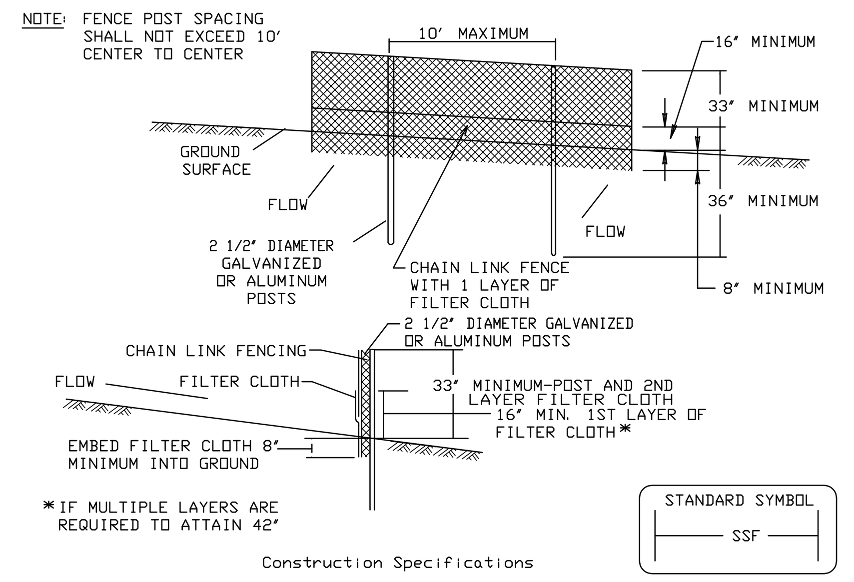

Construction Specifications

1. Fencing shall be 42' in height and constructed in accordance with the latest Maryland State Highway Details for Chain Link Fencing. The specification for a 6' fence shall be used, substituting 42' fabric and 6' length posts.

2. Chain link fence shall be fastened securely to the fence posts with wire ties. The lower tension wire, brace and truss rods, drive anchors and post caps are not required except on the ends of the fence.

3. Filter cloth shall be fastened securely to the chain link fence with ties spaced every 24' at the top and mid section.

4. Filter cloth shall be embedded a minimum of 8' into the ground.

5. When two sections of filter cloth adjoin each other, they shall be overlapped by 6' and folded.

6. Maintenance shall be performed as needed and silt buildups removed when 'bulges' develop in the silt fence, or when silt reaches 50% of fence height

7. Filter cloth shall be fastened securely to each fence post with wire ties or staples at top and mid section and shall meet the following requirements for Geotextile Class F:

Tensile Strength	50 lbs/in (min.)	Test: MSMT 509
Tensile Modulus	20 lbs/in (min.)	Test: MSMT 509
Flow Rate	0.3 gal/ft²/minute (max.)	Test: MSMT 322
Filtering Efficiency	75% (min.)	Test: MSMT 322

U.S. DEPARTMENT OF AGRICULTURE SOIL CONSERVATION SERVICE	PAGE H - 26 - 3	MARYLAND DEPARTMENT OF ENVIRONMENT WATER MANAGEMENT ADMINISTRATION

DETAIL E-9-1 STANDARD INLET PROTECTION

STANDARD SYMBOL SIP

TYPE A MAXIMUM DRAINAGE AREA = ¼ ACRE
TYPE B MAXIMUM DRAINAGE AREA = 1 ACRE

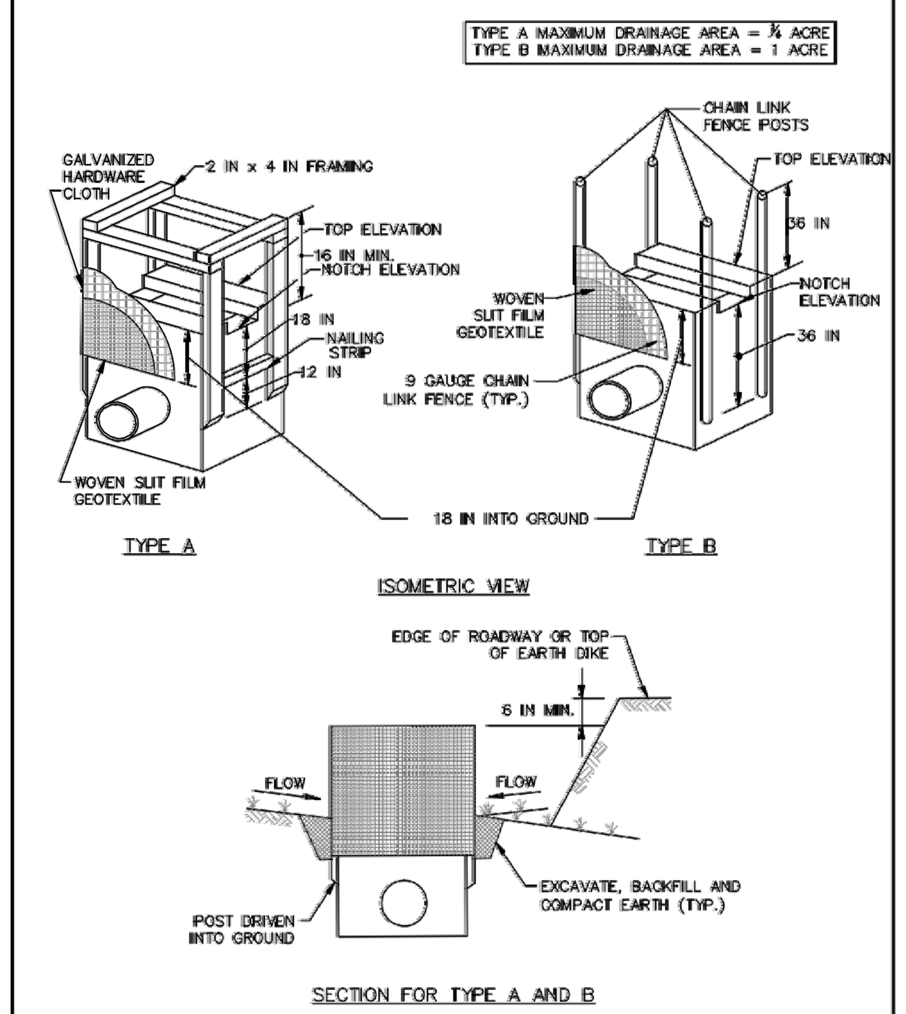

1 OF 2

MARYLAND STANDARDS AND SPECIFICATIONS FOR SOIL EROSION AND SEDIMENT CONTROL

U.S. DEPARTMENT OF AGRICULTURE NATURAL RESOURCES CONSERVATION SERVICE	2011	MARYLAND DEPARTMENT OF ENVIRONMENT WATER MANAGEMENT ADMINISTRATION

E.24

DETAIL E-9-1 STANDARD INLET PROTECTION

STANDARD SYMBOL SIP

CONSTRUCTION SPECIFICATIONS

1. USE WOVEN SLIT FILM GEOTEXTILE AS SPECIFIED IN SECTION H-1 MATERIALS.
2. EXCAVATE COMPLETELY AROUND THE INLET TO A DEPTH OF 18 INCHES BELOW THE NOTCH ELEVATION.
3. FOR TYPE A, USE NOMINAL 2 INCH X 4 INCH CONSTRUCTION GRADE LUMBER POSTS, DRIVEN 1 FOOT INTO THE GROUND AT EACH CORNER OF THE INLET. PLACE NAIL STRIPS BETWEEN THE POSTS ON THE ENDS OF THE INLET. ASSEMBLE THE TOP PORTION OF THE 2X4 FRAME AS SHOWN. STRETCH ½ INCH GALVANIZED HARDWARE CLOTH TIGHTLY AROUND THE FRAME AND FASTEN SECURELY. FASTEN GEOTEXTILE SECURELY TO THE HARDWARE CLOTH WITH TIES SPACED EVERY 24 INCHES AT THE TOP AND MID SECTION. EMBED GEOTEXTILE AND HARDWARE CLOTH A MINIMUM OF 18 INCHES BELOW THE WEIR CREST. THE ENDS OF THE GEOTEXTILE MUST MEET AT A POST, BE OVERLAPPED AND FOLDED, THEN FASTENED TO THE POST.

   FOR TYPE B, USE 2⅜ INCH DIAMETER GALVANIZED STEEL POSTS OF 0.095 INCH WALL THICKNESS AND 6 FOOT LENGTH, DRIVEN A MINIMUM OF 36 INCHES BELOW THE WEIR CREST AT EACH CORNER OF THE STRUCTURE. FASTEN 9 GAUGE OR HEAVIER CHAIN LINK FENCE, 42 INCHES IN HEIGHT, SECURELY TO THE FENCE POSTS WITH WIRE TIES. FASTEN GEOTEXTILE SECURELY TO THE CHAIN LINK FENCE WITH TIES SPACED EVERY 24 INCHES AT THE TOP AND MID SECTION. EMBED GEOTEXTILE AND CHAIN LINK FENCE A MINIMUM OF 18 INCHES BELOW THE WEIR CREST.
4. BACKFILL AROUND THE INLET IN LOOSE 4 INCH LIFTS AND COMPACT UNTIL SOIL IS LEVEL WITH THE NOTCH ELEVATION ON THE ENDS AND TOP ELEVATION ON THE SIDES.
5. STORM DRAIN INLET PROTECTION REQUIRES FREQUENT MAINTENANCE. REMOVE ACCUMULATED SEDIMENT AFTER EACH RAIN EVENT TO MAINTAIN FUNCTION AND AVOID PREMATURE CLOGGING. IF INLET PROTECTION DOES NOT COMPLETELY DRAIN WITHIN 24 HOURS AFTER A STORM EVENT, IT IS CLOGGED. WHEN THIS OCCURS, REMOVE ACCUMULATED SEDIMENT AND CLEAN, OR REPLACE GEOTEXTILE AND STONE.

2 OF 2

MARYLAND STANDARDS AND SPECIFICATIONS FOR SOIL EROSION AND SEDIMENT CONTROL

U.S. DEPARTMENT OF AGRICULTURE NATURAL RESOURCES CONSERVATION SERVICE	2011	MARYLAND DEPARTMENT OF ENVIRONMENT WATER MANAGEMENT ADMINISTRATION

E.25

CURB INLET PROTECTION (COG OR COS INLETS)

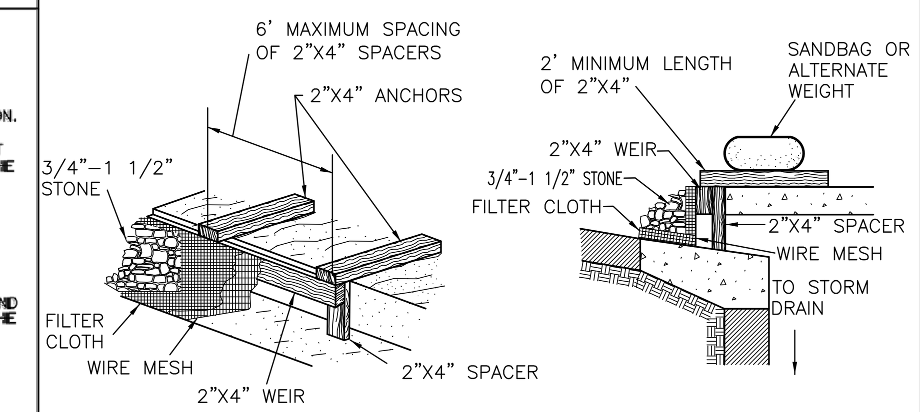

STANDARD SYMBOL CIP

MAX. DRAINAGE AREA = 1/4 ACRE

CONSTRUCTION SPECIFICATIONS

1. ATTACH A CONTINUOUS PIECE OF WIRE MESH (30" MINIMUM WIDTH BY THROAT LENGTH PLUS 4') TO THE 2" X 4" WEIR (MEASURING THROAT LENGTH PLUS 2') AS SHOWN ON THE STANDARD DRAWING.

2. PLACE A CONTINUOUS PIECE OF GEOTEXTILE CLASS E THE SAME DIMENSIONS AS THE WIRE MESH OVER THE WIRE MESH AND SECURELY ATTACH IT TO THE 2" X 4" WEIR.

3. SECURELY NAIL THE 2" X 4" WEIR TO A 9" LONG VERTICAL SPACER TO BE LOCATED BETWEEN THE WEIR AND THE INLET FACE (MAX. 4' APART).

4. PLACE THE ASSEMBLY AGAINST THE INLET THROAT AND NAIL (MINIMUM 2' LENGTHS OF 2" X 4" TO THE TOP OF THE WEIR AT SPACER LOCATIONS). THESE 2" X 4" ANCHORS SHALL EXTEND ACROSS THE INLET TOP AND BE HELD IN PLACE BY SANDBAGS OR ALTERNATE WEIGHT.

5. THE ASSEMBLY SHALL BE PLACED SO THAT THE END SPACERS ARE A MINIMUM 1' BEYOND BOTH ENDS OF THE THROAT OPENING.

6. FORM THE 1/2 " X 1/2 " WIRE MESH AND THE GEOTEXTILE FABRIC TO THE CONCRETE GUTTER AND AGAINST THE FACE OF THE CURB ON BOTH SIDES OF THE INLET. PLACE CLEAN 3/4 " X 1 1/2 " STONE OVER THE WIRE MESH AND GEOTEXTILE IN SUCH A MANNER TO PREVENT WATER FROM ENTERING THE INLET UNDER OR AROUND THE GEOTEXTILE.

7. THIS TYPE OF PROTECTION MUST BE INSPECTED FREQUENTLY AND THE FILTER CLOTH AND STONE REPLACED WHEN CLOGGED WITH SEDIMENT.

8. ASSURE THAT STORM FLOW DOES NOT BYPASS THE INLET BY INSTALLING A TEMPORARY EARTH OR ASPHALT DIKE TO DIRECT THE FLOW TO THE INLET.

U.S. DEPARTMENT OF AGRICULTURE SOIL CONSERVATION SERVICE	PAGE E-16-5B	MARYLAND DEPARTMENT OF ENVIRONMENT WATER MANAGEMENT ADMINISTRATION

DETAIL 3 - PERIMETER DIKE / SWALE

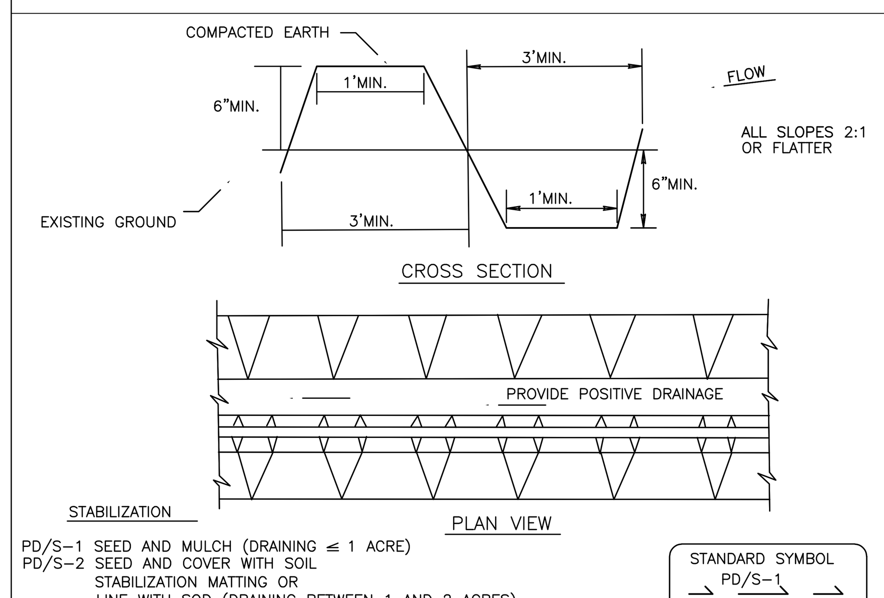

PD/S-1 SEED AND MULCH (DRAINING ≤ 1 ACRE)
PD/S-2 SEED AND COVER WITH SOIL STABILIZATION MATTING OR LINE WITH SOD (DRAINING BETWEEN 1 AND 2 ACRES)

STANDARD SYMBOL PD/S-1

Construction Specifications

1. All perimeter dike/swales shall have an uninterrupted positive grade to an outlet. Spot elevations may be necessary for grades less than 1%.

2. Runoff diverted from a disturbed area shall be conveyed to a sediment trapping device.

3. Runoff diverted from an undisturbed area shall outlet into an undisturbed stabilized area at a non-erosive velocity.

4. The swale shall be excavated or shaped to line, grade, and cross-section as required to meet the criteria specified in the standard.

5. Fill shall be compacted by earth moving equipment.

6. Stabilization with seed and mulch or as specified of the area disturbed by the dike and swale shall be completed within 7 days upon removal.

7. Inspection and required maintenance shall be provided after each rain event.

Note: The maximum drainage area for this practice is 2 acres.

U.S. DEPARTMENT OF AGRICULTURE SOIL CONSERVATION SERVICE	PAGE A - 3 - 3	MARYLAND DEPARTMENT OF ENVIRONMENT WATER MANAGEMENT ADMINISTRATION

DETAIL 24 - STABILIZED CONSTRUCTION ENTRANCE

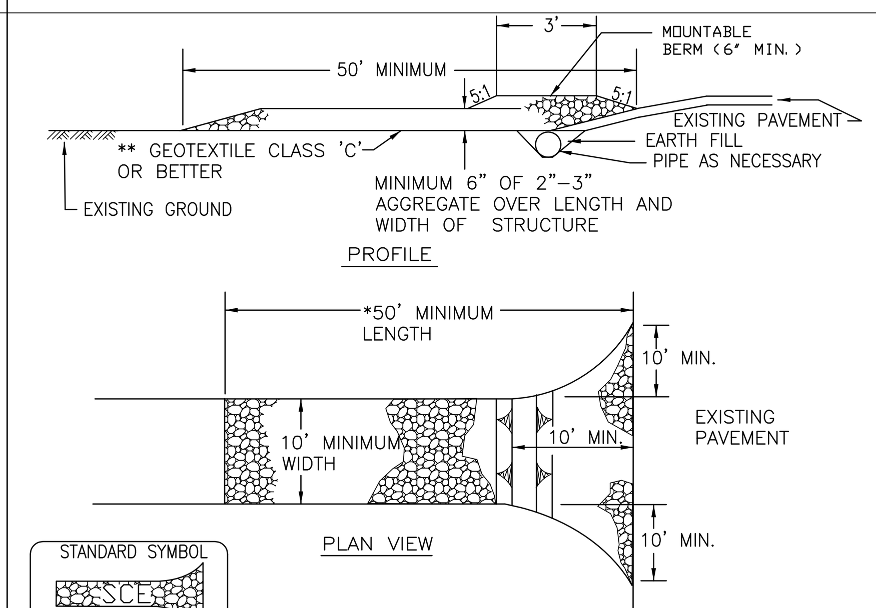

Construction Specification

1. Length – minimum of 50' (*30' for single residence lot).
2. Width – 10' minimum, should be flared at the existing road to provide a turning radius.
3. Geotextile fabric (filter cloth) shall be placed over the existing ground prior to placing stone. **The plan approval authority may not require single family residences to use geotextile.
4. Stone – crushed aggregate (2" to 3") or reclaimed or recycled concrete equivalent shall be placed at least 6" deep over the length and width of the entrance.
5. Surface Water – all surface water flowing to or diverted toward construction entrances shall be piped through the entrance, maintaining positive drainage. Pipe installed through the stabilized construction entrance shall be protected with a mountable berm with 5:1 slopes and a minimum of 6" of stone over the pipe. Pipe has to be sized according to the drainage. When the SCE is located at a high spot and has no drainage to convey a pipe will not be necessary. Pipe should be sized according to the amount of runoff to be conveyed. A 6" minimum will be required.
6. Location – A stabilized construction entrance shall be located at every point where construction traffic enters or leaves a construction site. Vehicles leaving the site must travel over the entire length of the stabilized construction entrance.

U.S. DEPARTMENT OF AGRICULTURE SOIL CONSERVATION SERVICE	PAGE F-17-3	MARYLAND DEPARTMENT OF ENVIRONMENT WATER MANAGEMENT ADMINISTRATION

DETAIL 23B - AT GRADE INLET PROTECTION

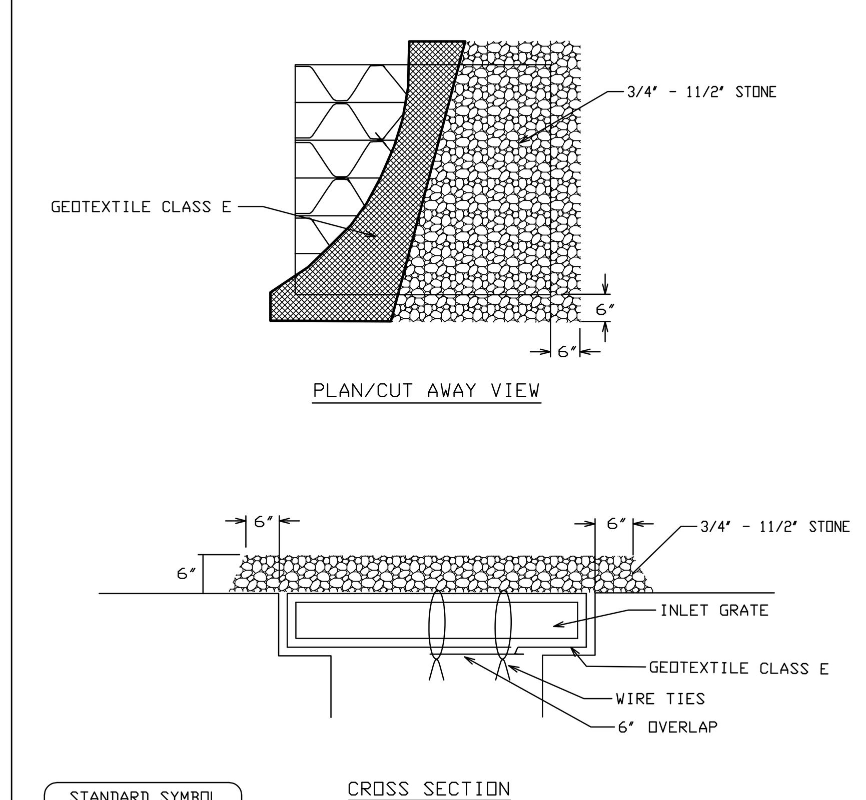

STANDARD SYMBOL AGIP

MAX. DRAINAGE AREA = 1 ACRE

Construction Specifications

1. Lift grate and wrap with Geotextile Class E to completely cover all openings, then set grate back in place.

2. Place 3/4' to 11/2' stone, 4'-6' thick on the grate to secure the fabric and provide additional filtration.

U.S. DEPARTMENT OF AGRICULTURE SOIL CONSERVATION SERVICE	PAGE E - 16 - 5A	MARYLAND DEPARTMENT OF ENVIRONMENT WATER MANAGEMENT ADMINISTRATION

TREE PROTECTION

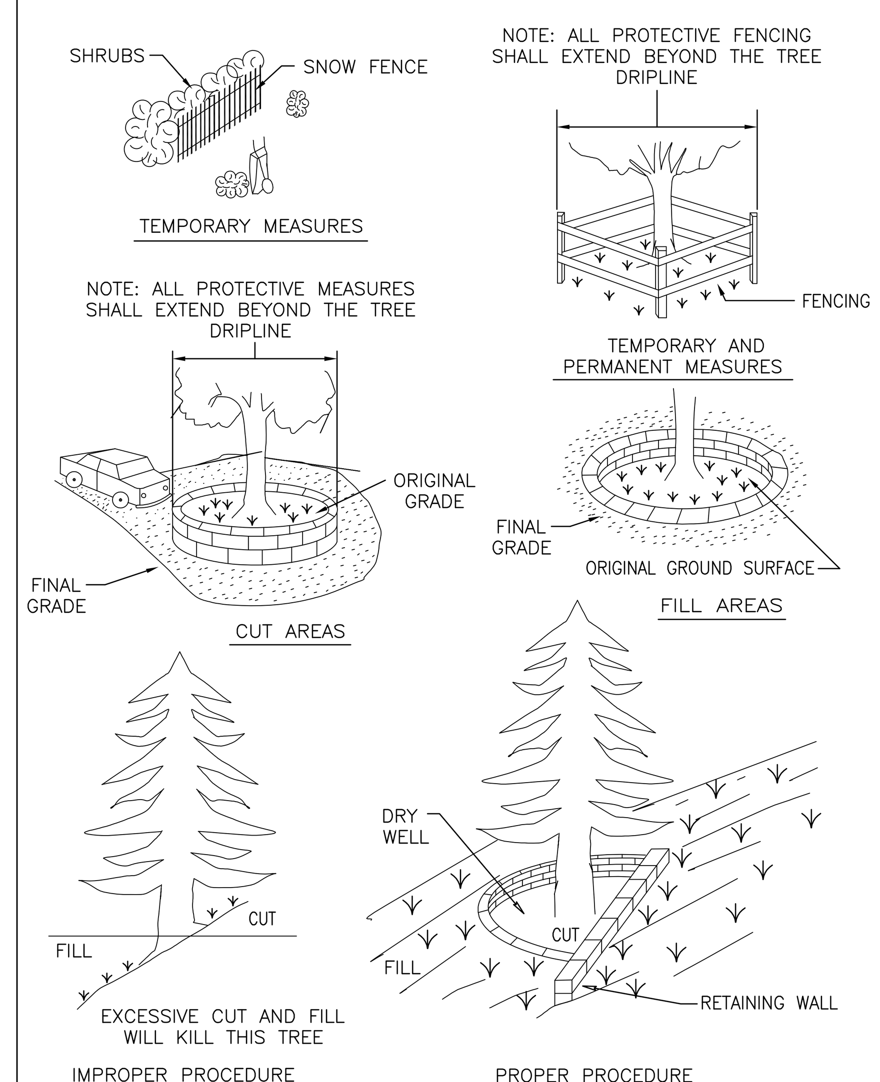

U.S. DEPARTMENT OF AGRICULTURE SOIL CONSERVATION SERVICE	PAGE G-23-3	MARYLAND DEPARTMENT OF ENVIRONMENT WATER MANAGEMENT ADMINISTRATION

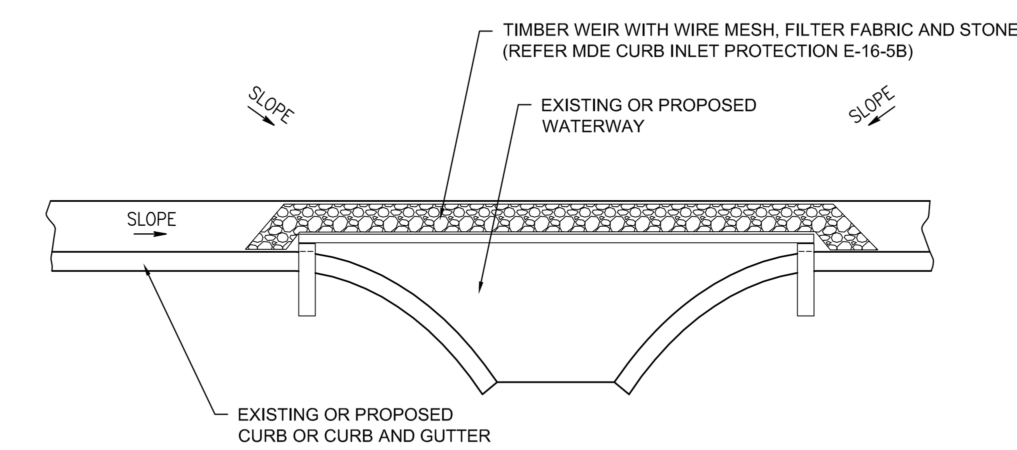

CURB INLET PROTECTION AT WATERWAY

NO SCALE

100% SUBMITTAL

AECOM

AECOM TECHNICAL SERVICES, INC.
3101 WILSON BOULEVARD
SUITE 900
ARLINGTON, VA 22201

T: 703-682-4900 F: 703.682.4901
www.aecom.com

SEAL AREA

STATE OF MARYLAND ERIC P. BUCK No. 26212 REGISTERED PROFESSIONAL ENGINEER 10/12/2012

KEY PLAN

REV	DATE	DESCRIPTION	S&R BR.	CUSTOMER	PM	SECT. HEAD

	INITIALS	DATE
DRAWN BY	MLF	06/17/11
CHECKED BY	FM	
A-E MANAGER	EW	
ENVIRONMENTAL BRANCH	JH	
SAFETY BRANCH	CS	
CM	MMD	
PM	RWP	
CUSTOMER	JWB	
ENG. BRANCH	DGL	

EROSION & SEDIMENT CONTROL DETAILS

C-503

FLIGHT PROJECTS BUILDING

NATIONAL AERONAUTICS AND SPACE ADMINISTRATION

GODDARD SPACE FLIGHT CENTER GREENBELT, MARYLAND
FACILITIES MANAGEMENT DIVISION

DATE ISSUED	CoF CODE OR WR#	AECOM PROJECT NO.	SCALE
10/12/2012	12GXAZ	60187636	

FILE DATE: 10/10/2012 1:58:26 PM

File Location: M:\WATER\60190712 GODDARD SPACE FLIGHT CENTER\0001\CADD\DWG\90712C_503.DWG
Plotted By: FRAZIER, MICHELLE; Plot Date: Wednesday, October 10, 2012; Plot CTB File: ----; Page Setup Name: ----; InsUnits: 2; LTScale: 1.00 Measurement: 0;

DETAIL 25 - ROCK OUTLET PROTECTION I

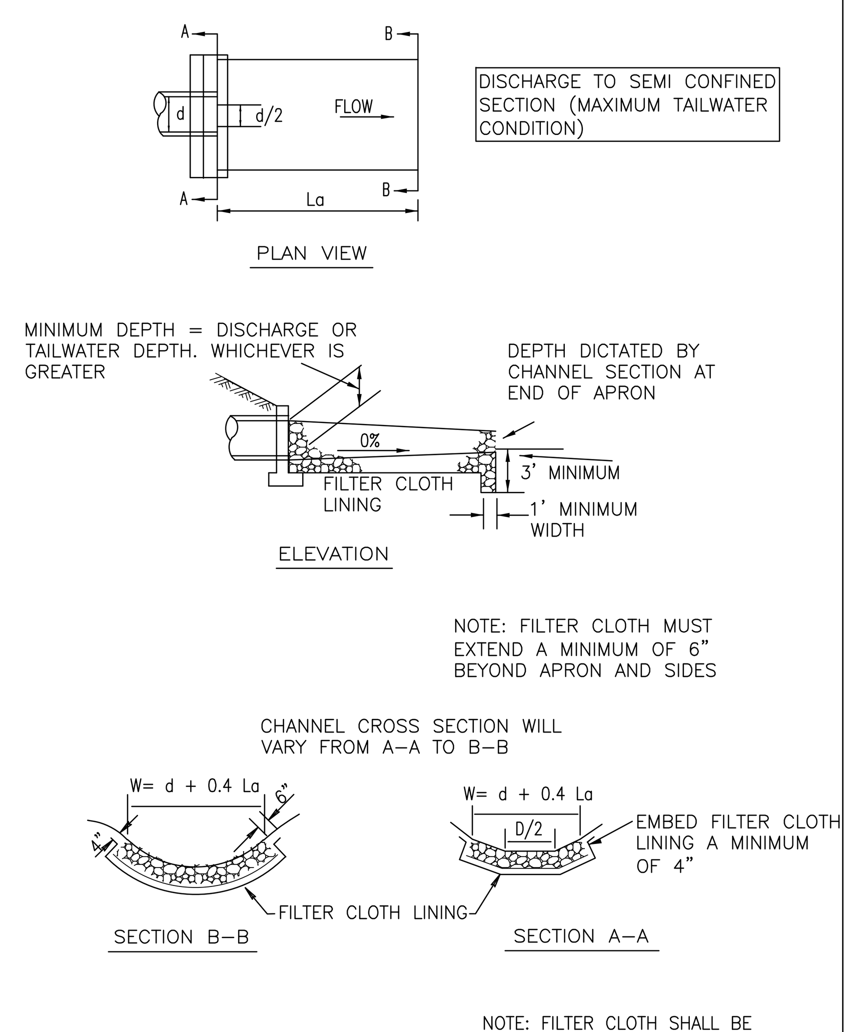

U.S. DEPARTMENT OF AGRICULTURE SOIL CONSERVATION SERVICE	PAGE F-18-8	MARYLAND DEPARTMENT OF ENVIRONMENT WATER MANAGEMENT ADMINISTRATION

ROCK OUTLET PROTECTION

Construction Specifications

1. The subgrade for the filter, rip-rap, or gabion shall be prepared to the required lines and grades. Any fill required in the subgrade shall be compacted to a density of approximately that of the surrounding undisturbed material.

2. The rock or gravel shall conform to the specified grading limits when installed respectively in the rip-rap or filter.

3. Geotextile shall be protected from punching, cutting, or tearing. Any damage other than an occasional small hole shall be repaired by placing another piece of geotextile over the damaged part or by completely replacing the geotextile. All overlaps whether for repairs or for joining two pieces of geotextile shall be a minimum of one foot.

4. Stone for the rip-rap or gabion outlets may be placed by equipment. They shall be constructed to the full course thickness in one operation and in such a manner as to avoid displacement of underlying materials. The stone for rip-rap or gabion outlets shall be delivered and placed in a manner that will ensure that it is reasonably homogeneous with the smaller stones and spalls filling the voids between the larger stones. Rip-rap shall be placed in a manner to prevent damage to the filter blanket or geotextile. Hand placement will be required to the extent necessary to prevent damage to the permanent works.

5. The stone shall be placed so that it blends in with the existing ground. If the stone is placed too high then the flow will be forced out of the channel and scour adjacent to the stone will occur.

U.S. DEPARTMENT OF AGRICULTURE SOIL CONSERVATION SERVICE	PAGE F-18-8A	MARYLAND DEPARTMENT OF ENVIRONMENT WATER MANAGEMENT ADMINISTRATION

DETAIL 2 - TEMPORARY SWALE

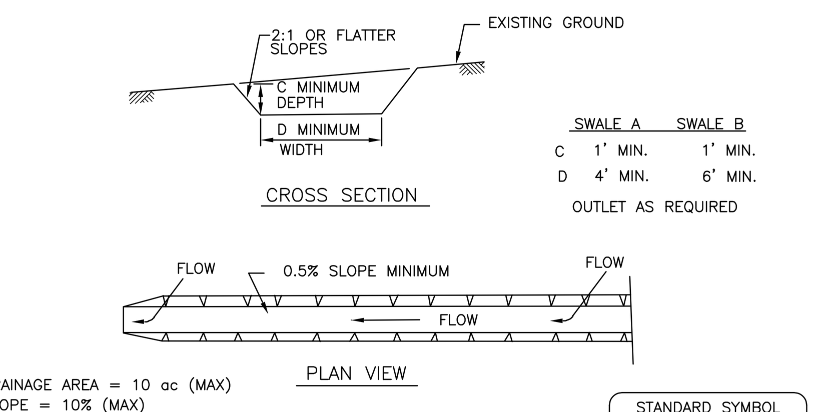

	SWALE A	SWALE B
C	1' MIN.	1' MIN.
D	4' MIN.	6' MIN.

OUTLET AS REQUIRED

DRAINAGE AREA = 10 ac (MAX)
SLOPE = 10% (MAX)

STANDARD SYMBOL
A - 2/ B - 3

FLOW CHANNEL STABILIZATION
GRADE 0.5% MIN. 10% MAX.

1. Seed and cover with straw mulch.
2. Seed and cover with Erosion Control Matting or line with sod.
3. 4"-7" stone or recycled concrete equivalent pressed into soil in a minimum 7" layer.

Construction Specifications

1. All temporary swales shall have uninterrupted positive grade to an outlet. Spot elevations may be necessary for grades less than 1%.

2. Runoff diverted from a disturbed area shall be conveyed to a sediment trapping device.

3. Runoff diverted from an undisturbed area shall outlet directly into an undisturbed stabilized area at a non-erosive velocity.

4. All trees, brush, stumps, obstructions, and other objectional material shall be removed and disposed of so as not to interfere with the proper functioning of the swale.

5. The swale shall be excavated or shaped to line, grade and cross section as required to meet the criteria specified herein and be free of bank projections or other irregularities which will impede normal flow.

6. Fill, if necessary, shall be compacted by earth moving equipment.

7. All earth removed and not needed for construction shall be placed so that it will not interfere with the functioning of the swale.

8. Inspection and maintenance must be provided periodically and after each rain event.

U.S. DEPARTMENT OF AGRICULTURE SOIL CONSERVATION SERVICE	PAGE A-2-4	MARYLAND DEPARTMENT OF ENVIRONMENT WATER MANAGEMENT ADMINISTRATION

DETAIL 20B - SUMP PIT

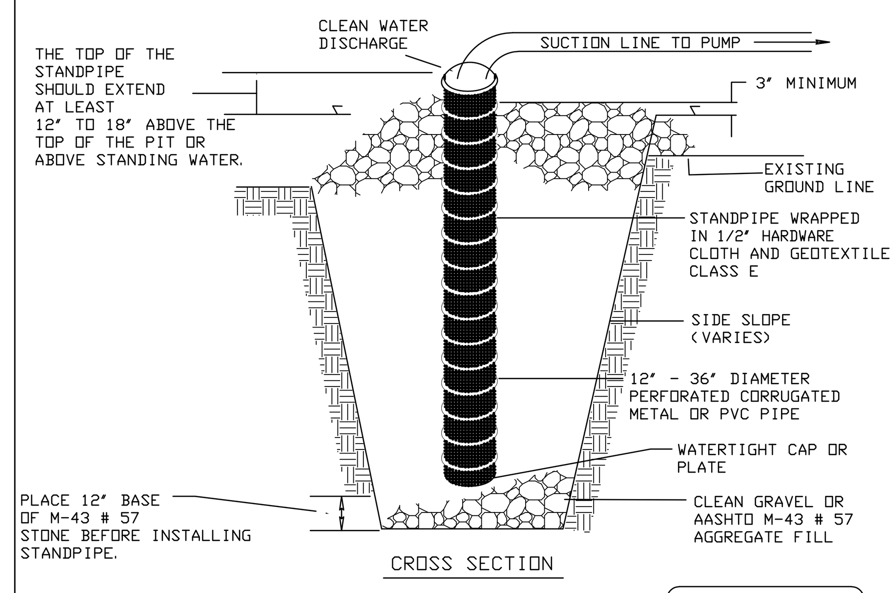

STANDARD SYMBOL
SP

Construction Specifications

1. Pit dimensions are variable, with the minimum diameter being 2 times the standpipe diameter.

2. The standpipe should be constructed by perforating a 12" to 24" diameter corrugated or PVC pipe. Then wrapping with 1/2" hardware cloth and Geotextile Class E. The perforations shall be 1/2" x 6" slits or 1" diameter holes.

3. A base of filter material consisting of clean gravel or #57 stone should be placed in the pit to a depth of 12". After installing the standpipe, the pit surrounding the standpipe should then be backfilled with the same filter material.

4. The standpipe should extend 12" to 18" above the lip of the pit or the riser crest elevation (basin dewatering only) and the filter material should extend 3" minimum above the anticipated standing water elevation.

U.S. DEPARTMENT OF AGRICULTURE SOIL CONSERVATION SERVICE	PAGE D - 13 - 2	MARYLAND DEPARTMENT OF ENVIRONMENT WATER MANAGEMENT ADMINISTRATION

DETAIL 27 - ROCK OUTLET PROTECTION III

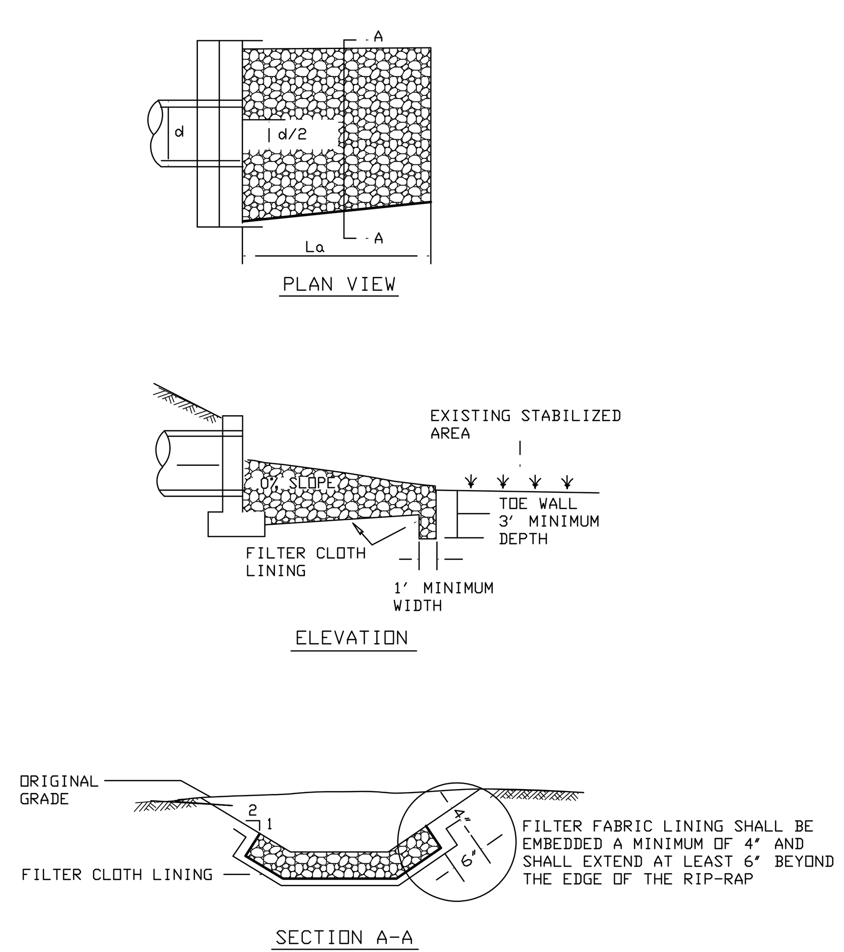

NOTE: FILTER CLOTH SHALL BE GEOTEXTILE CLASS C

U.S. DEPARTMENT OF AGRICULTURE SOIL CONSERVATION SERVICE	PAGE F - 18 - 10	MARYLAND DEPARTMENT OF ENVIRONMENT WATER MANAGEMENT ADMINISTRATION

DETAIL 30 - EROSION CONTROL MATTING

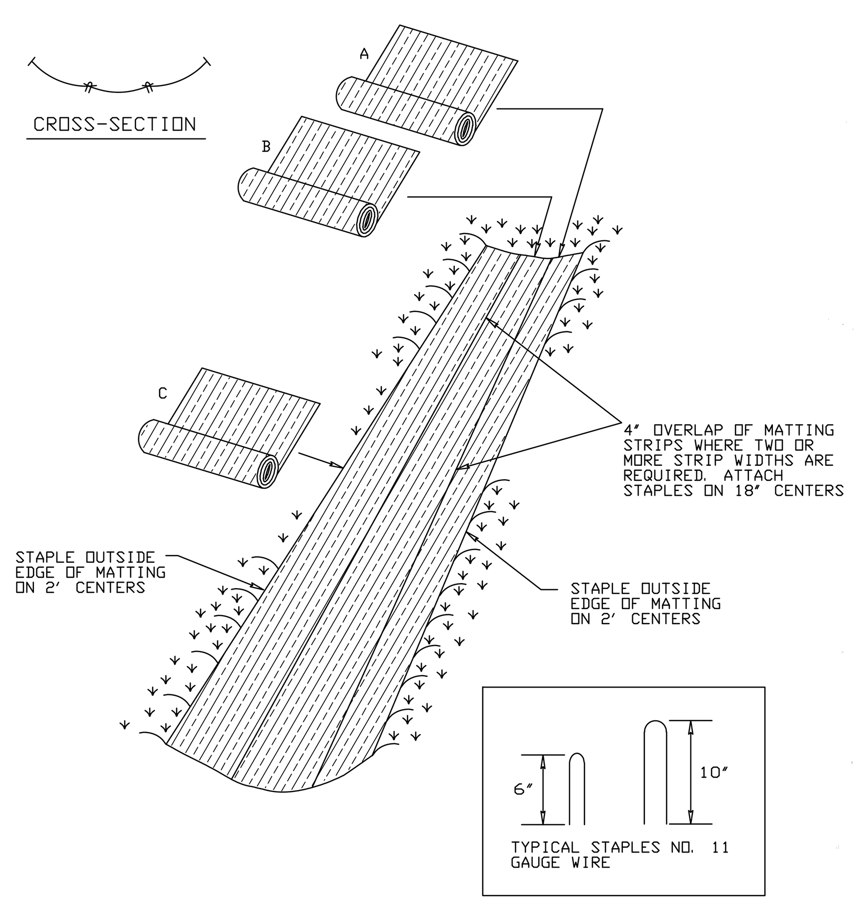

U.S. DEPARTMENT OF AGRICULTURE SOIL CONSERVATION SERVICE	PAGE G - 22 - 2	MARYLAND DEPARTMENT OF ENVIRONMENT WATER MANAGEMENT ADMINISTRATION

DETAIL 7 - STONE CHECK DAM

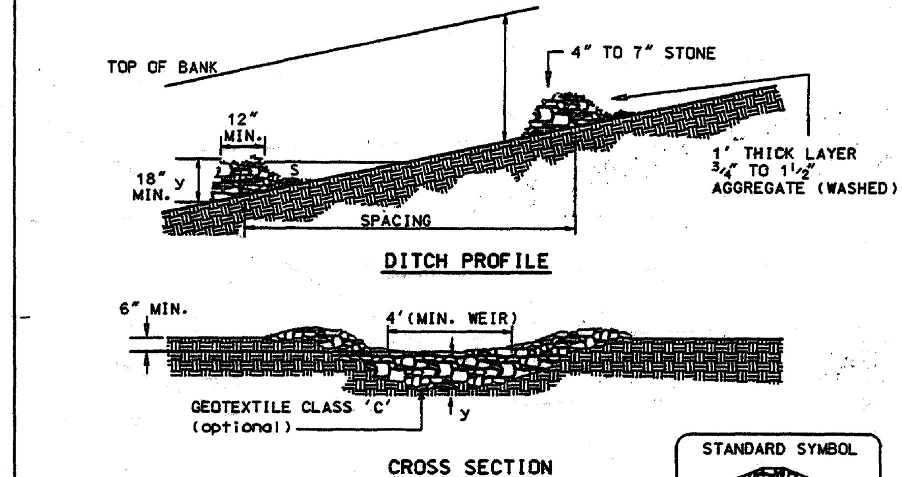

STANDARD SYMBOL
CD

STANDARD STONE CHECK DAM DESIGN

SLOPE	SPACING
2% or less	80'
2.1% to 4%	40'
4.1% to 7%	25'
7.1% to 10%	15'
over 10%	use lined waterway design

Construction Specifications

1. Swales and ditches shall be prepared in accordance with the construction specifications described in Section A-2. Standards and Specifications for Temporary Swale.
2. The check dam shall be constructed of 4"-7" stone. The stone shall be placed so that it completely covers the width of the channel and is keyed into the channel banks.
3. The top of the check dam shall be constructed so the the center is approximately 6" lower than the outer edges. forming a weir that water can flow across.
4. The maximum height of the check dam at the center shall not exceed 2'.
5. The upstream side of the check dam shall be lined with approximately 1' of 3/4" to 1 1/2" aggregate.
6. Accumulated sediment shall be removed when it has built up to 1/2 of the original height of the weir crest.

U.S. DEPARTMENT OF AGRICULTURE SOIL CONSERVATION SERVICE	PAGE B - 8 - 3	MARYLAND DEPARTMENT OF ENVIRONMENT WATER MANAGEMENT ADMINISTRATION

DETAIL F-4 FILTER BAG

STANDARD SYMBOL
FB

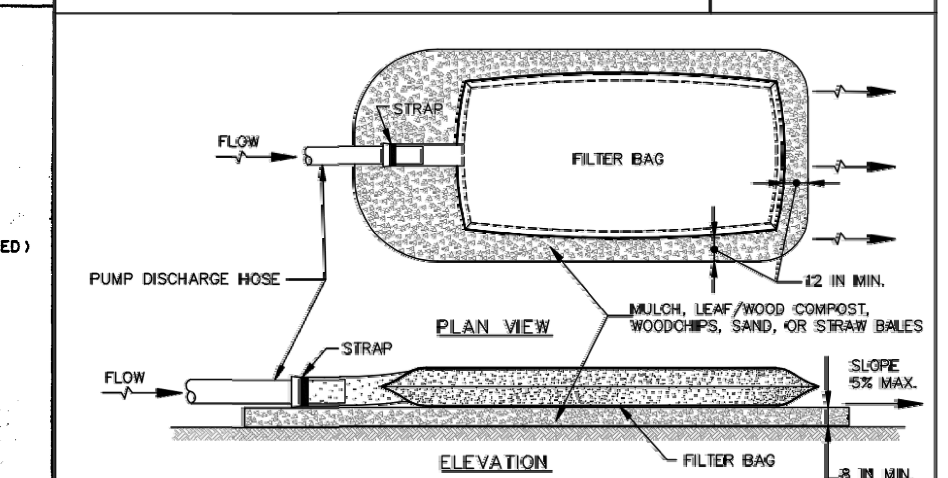

CONSTRUCTION SPECIFICATIONS

1. TIGHTLY SEAL SLEEVE AROUND THE PUMP DISCHARGE HOSE WITH A STRAP OR SIMILAR DEVICE.
2. PLACE FILTER BAG ON SUITABLE BASE (E.G., MULCH, LEAF/WOOD COMPOST, WOODCHIPS, SAND, OR STRAW BALES) LOCATED ON A LEVEL OR 5% MAXIMUM SLOPING SURFACE. DISCHARGE TO A STABILIZED AREA. EXTEND BASE A MINIMUM OF 12 INCHES FROM EDGES OF BAG.
3. CONTROL PUMPING RATE TO PREVENT EXCESSIVE PRESSURE WITHIN THE FILTER BAG IN ACCORDANCE WITH THE MANUFACTURER RECOMMENDATIONS. AS THE BAG FILLS WITH SEDIMENT, REDUCE PUMPING RATE.
4. REMOVE AND PROPERLY DISPOSE OF FILTER BAG UPON COMPLETION OF PUMPING OPERATIONS OR AFTER BAG HAS REACHED CAPACITY, WHICHEVER OCCURS FIRST. SPREAD THE DEWATERED SEDIMENT FROM THE BAG IN AN APPROVED UPLAND AREA AND STABILIZE WITH SEED AND MULCH BY THE END OF THE WORK DAY. RESTORE THE SURFACE AREA BENEATH THE BAG TO ORIGINAL CONDITION UPON REMOVAL OF THE DEVICE.
5. USE NONWOVEN GEOTEXTILE WITH DOUBLE STITCHED SEAMS USING HIGH STRENGTH THREAD. SIZE SLEEVE TO ACCOMMODATE A MAXIMUM 4 INCH DIAMETER PUMP DISCHARGE HOSE. THE BAG MUST BE MANUFACTURED FROM A NONWOVEN GEOTEXTILE THAT MEETS OR EXCEEDS MINIMUM AVERAGE ROLL VALUES (MARV) FOR THE FOLLOWING:

GRAB TENSILE	250 LB	ASTM D-4632
PUNCTURE	150 LB	ASTM D-4833
FLOW RATE	70 GAL/MIN/FT²	ASTM D-4491
PERMITTIVITY (SEC⁻¹)	1.2 SEC⁻¹	ASTM D-4491
UV RESISTANCE	70% STRENGTH @ 500 HOURS	ASTM D-4355
APPARENT OPENING SIZE (AOS)	0.15-0.18 MM	ASTM D-4751
SEAM STRENGTH	90%	ASTM D-4632

6. REPLACE FILTER BAG IF BAG CLOGS OR HAS RIPS, TEARS, OR PUNCTURES. DURING OPERATION KEEP CONNECTION BETWEEN PUMP HOSE AND FILTER BAG WATER TIGHT. REPLACE BEDDING IF IT BECOMES DISPLACED.

MARYLAND STANDARDS AND SPECIFICATIONS FOR SOIL EROSION AND SEDIMENT CONTROL

U.S. DEPARTMENT OF AGRICULTURE NATURAL RESOURCES CONSERVATION SERVICE	2011	MARYLAND DEPARTMENT OF ENVIRONMENT WATER MANAGEMENT ADMINISTRATION

F.9

100% SUBMITTAL

AECOM
AECOM TECHNICAL SERVICES, INC.
3101 WILSON BOULEVARD
SUITE 900
ARLINGTON, VA 22201
T: 703-682-4900 F: 703.682.4901
www.aecom.com

SEAL AREA
STATE OF MARYLAND ERIC P. BUCK No. 26212 REGISTERED PROFESSIONAL ENGINEER
10/12/2012

KEY PLAN

REV	DATE	DESCRIPTION	S&R BR.	CUSTOMER	PM	SECT. HEAD

	INITIALS	DATE
DRAWN BY	MLF	06/17/11
CHECKED BY	FM	
A-E MANAGER	EW	
ENVIRONMENTAL BRANCH	JH	
SAFETY BRANCH	CS	
CM	MMD	
PM	RWP	
CUSTOMER	JWB	
ENG. BRANCH	DGL	

EROSION & SEDIMENT CONTROL DETAILS

C-504

FLIGHT PROJECTS BUILDING

NATIONAL AERONAUTICS AND SPACE ADMINISTRATION
GODDARD SPACE FLIGHT CENTER GREENBELT, MARYLAND
FACILITIES MANAGEMENT DIVISION

DATE ISSUED	CoF CODE OR WR#	AECOM PROJECT NO.	SCALE
10/12/2012	12GXAZ	60187636	

FILE DATE: 10/10/2012 1:58:42 PM

File Location: M:\WATER\60190712 GODDARD SPACE FLIGHT CENTER\0001\CADD\DWG\90712C_504.DWG
Plotted By: FRAZIER, MICHELLE; Plot Date: Wednesday, October 10, 2012; Plot CTB File: ----; Page Setup Name: ----; InsUnits: 2; LTScale: 1.00 Measurement: 0;

B.4.C SPECIFICATIONS FOR MICRO-BIORETENTION. RAIN GARDENS, LANDSCAPE INFILTRATION & INFILTRATION BERMS

1. MATERIAL SPECIFICATIONS
THE ALLOWABLE MATERIALS TO BE USED IN THESE PRACTICES ARE DETAILED IN TABLE B.4.1.

2. FILTERING MEDIA OR PLANTING SOIL
THE SOIL SHALL BE A UNIFORM MIX, FREE OF STONES, STUMPS, ROOTS OR OTHER SIMILAR OBJECTS LARGER THAN TWO INCHES. NO OTHER MATERIALS OR SUBSTANCES SHALL BE MIXED OR DUMPED WITHIN THE MICRO-BIORETENTION PRACTICE THAT MAY BE HARMFUL TO PLANT GROWTH, OR PROVE A HINDRANCE TO THE PLANTING OR MAINTENANCE OPERATIONS. THE PLANTING SOIL SHALL BE FREE OF BERMUDA GRASS, QUACKGRASS, JOHNSON GRASS, OR OTHER NOXIOUS WEEDS AS SPECIFIED UNDER COMAR 15.08.01.05.

THE PLANTING SOIL SHALL BE TESTED AND SHALL MEET THE FOLLOWING CRITERIA:

- SOIL COMPONENT - LOAMY SAND OR SANDY LOAM (USDA SOIL TEXTURAL CLASSIFICATION)
- ORGANIC CONTENT - MINIMUM 10% BY DRY WEIGHT (ASTM D 2974). IN GENERAL, THIS CAN BE MET WITH A MIXTURE OF LOAMY SAND (60%-65%) AND COMPOST (35% TO 40%) OR SANDY LOAM (30%), COARSE SAND (30%), AND COMPOST (40%).
- CLAY CONTENT - MEDIA SHALL HAVE A CLAY CONTENT OF LESS THAN 5%
- pH RANGE - SHOULD BE BETWEEN 5.5 - 7.0. AMENDMENTS (E.G., LIME, IRON SULFATE PLUS SULFUR) MAY BE MIXED INTO THE SOIL TO INCREASE OR DECREASE pH.

THERE SHALL BE AT LEAST ONE SOIL TEST PER PROJECT. EACH TEST SHALL CONSIST OF BOTH THE STANDARD SOIL TEST FOR pH, AND ADDITIONAL TESTS OF ORGANIC MATTER, AND SOLUBLE SALTS. A TEXTURAL ANALYSIS IS REQUIRED FROM THE SITE STOCKPILED TOPSOIL. IF TOPSOIL IS IMPORTED, THEN A TEXTURE ANALYSIS SHALL BE PERFORMED FOR EACH LOCATION WHERE THE TOPSOIL WAS EXCAVATED.

3. COMPACTION
IT IS VERY IMPORTANT TO MINIMIZE COMPACTION OF BOTH THE BASE OF BIORETENTION PRACTICES AND THE REQUIRED BACKFILL. WHEN POSSIBLE, USE EXCAVATION HOES TO REMOVE ORIGINAL SOIL. IF PRACTICES ARE EXCAVATED USING A LOADER, THE CONTRACTOR SHOULD USE WIDE TRACK OR MARSH TRACK EQUIPMENT, OR LIGHT EQUIPMENT WITH TURF TYPE TIRES. USE OF EQUIPMENT WITH NARROW TRACKS OR NARROW TIRES, RUBBER TIRES WITH LARGE LUGS, OR HIGH-PRESSURE TIRES WILL CAUSE EXCESSIVE COMPACTION RESULTING IN REDUCED INFILTRATION RATES AND IS NOT ACCEPTABLE. COMPACTION WILL SIGNIFICANTLY CONTRIBUTE TO DESIGN FAILURE.

COMPACTION CAN BE ALLEVIATED AT THE BASE OF THE BIORETENTION FACILITY BY USING A PRIMARY TILLING OPERATION SUCH AS A CHISEL PLOW, RIPPER, OR SUBSOILER. THESE TILLING OPERATIONS ARE TO REFRACTURE THE SOIL PROFILE THROUGH THE 12 INCH COMPACTION ZONE. SUBSTITUTE METHODS MUST BE APPROVED BY THE ENGINEER. ROTOTILLERS TYPICALLY DO NOT TILL DEEP ENOUGH TO REDUCE THE EFFECTS OF COMPACTION FROM HEAVY EQUIPMENT

ROTOTILL 2 TO 3 INCHES OF SAND INTO THE BASE OF THE BIORETENTION FACILITY BEFORE BACKFILLING THE OPTIONAL SAND LAYER. PUMP ANY PONDED WATER BEFORE PREPARING (ROTOTILLING) BASE.

WHEN BACKFILLING THE TOPSOIL OVER THE SAND LAYER, FIRST PLACE 3 TO 4 INCHES OF TOPSOIL OVER THE SAND, THEN ROTOTILL THE SAND/TOPSOIL TO CREATE A GRADATION ZONE. BACKFILL THE REMAINDER OF THE TOPSOIL TO FINAL GRADE.

WHEN BACKFILLING THE BIORETENTION FACILITY, PLACE SOIL IN LIFTS 12" TO 18". DO NOT USE HEAVY EQUIPMENT WITHIN THE BIORETENTION BASIN. HEAVY EQUIPMENT CAN BE USED AROUND THE PERIMETER OF THE BASIN TO SUPPLY SOILS AND SAND. GRADE BIORETENTION MATERIALS WITH LIGHT EQUIPMENT SUCH AS A COMPACT LOADER OR A DOZER/LOADER WITH MARSH TRACKS.

4. PLANT MATERIAL
RECOMMENDED PLANT MATERIAL FOR MICRO-BIORETENTION PRACTICES CAN BE FOUND IN APPENDIX A, SECTION A.2.3.

5. PLANT INSTALLATION
COMPOST IS A BETTER ORGANIC MATERIAL SOURCE, IS LESS LIKELY TO FLOAT, AND SHOULD BE PLACED IN THE INVERT AND OTHER LOW AREAS. MULCH SHOULD BE PLACED IN SURROUNDING TO A UNIFORM THICKNESS OF 2" TO 3". SHREDDED OR CHIPPED HARDWOOD MULCH IS THE ONLY ACCEPTED MULCH. PINE MULCH AND WOOD CHIPS WILL FLOAT AND MOVE TO THE PERIMETER OF THE BIORETENTION AREA DURING A STORM EVENT AND ARE NOT ACCEPTABLE. SHREDDED MULCH MUST BE WELL AGED (6 TO 12 MONTHS) FOR ACCEPTANCE.

ROOTSTOCK OF THE PLANT MATERIAL SHALL BE KEPT MOIST DURING TRANSPORT AND ON-SITE OF THE BALL IS ABOVE FINAL TH STORAGE. THE PLANT ROOT BALL SHOULD BE PLANTED SO 1/8 GRADE SURFACE. THE DIAMETER OF THE PLANTING PIT SHALL BE AT LEAST SIX INCHES LARGER THAN THE DIAMETER OF THE PLANTING BALL. SET AND MAINTAIN THE PLANT STRAIGHT DURING THE ENTIRE PLANTING PROCESS. THOROUGHLY WATER GROUND BED COVER AFTER INSTALLATION.

TREES SHALL BE BRACED USING 2" BY 2" STAKES ONLY AS NECESSARY AND FOR THE FIRST GROWING SEASON ONLY. STAKES ARE TO BE EQUALLY SPACED ON THE OUTSIDE OF THE TREE BALL.

GRASSES AND LEGUME SEED SHOULD BE DRILLED INTO THE SOIL TO A DEPTH OF AT LEAST ONE INCH. GRASS AND LEGUME PLUGS SHALL BE PLANTED FOLLOWING THE NON-GRASS GROUND COVER PLANTING SPECIFICATIONS.

THE TOPSOIL SPECIFICATIONS PROVIDE ENOUGH ORGANIC MATERIAL TO ADEQUATELY SUPPLY NUTRIENTS FROM NATURAL CYCLING. THE PRIMARY FUNCTION OF THE BIORETENTION STRUCTURE IS TO IMPROVE WATER QUALITY. ADDING FERTILIZERS DEFEATS, OR AT A MINIMUM, IMPEDES THIS GOAL. ONLY ADD FERTILIZER IF WOOD CHIPS OR MULCH ARE USED TO AMEND THE SOIL. ROTOTILL UREA FERTILIZER AT A RATE OF 2 POUNDS PER 1000 SQUARE FEET.

6. UNDERDRAINS
UNDERDRAINS SHOULD MEET THE FOLLOWING CRITERIA:

- PIPE - SHOULD BE 4" TO 6" DIAMETER, SLOTTED OR PERFORATED RIGID PLASTIC PIPE (ASTM F 758, TYPE PS 28, OR AASHTO-M-278) IN A GRAVEL LAYER. THE PREFERRED MATERIAL IS SLOTTED, 4" RIGID PIPE (E.G., PVC OR HDPE).
- PERFORATIONS - IF PERFORATED PIPE IS USED, PERFORATIONS SHOULD BE 3/8" DIAMETER LOCATED 6" ON CENTER WITH A MINIMUM OF FOUR HOLES PER ROW. PIPE SHALL BE WRAPPED WITH A 1/4" (NO. 4 OR 4X4) GALVANIZED HARDWARE CLOTH.
- GRAVEL - THE GRAVEL LAYER (NO. 57 STONE PREFERRED) SHALL BE AT LEAST 3" THICK ABOVE AND BELOW THE UNDERDRAIN.
- THE MAIN COLLECTOR PIPE SHALL BE AT A MINIMUM 0.5% SLOPE.
- A RIGID, NON-PERFORATED OBSERVATION WELL MUST BE PROVIDED (ONE PER EVERY 1,000 SQUARE FEET) TO PROVIDE A CLEAN-OUT PORT AND MONITOR PERFORMANCE OF THE FILTER.
- A 4" LAYER OF PEA GRAVEL (1/8" TO 3/8" STONE) SHALL BE LOCATED BETWEEN THE FILTER MEDIA AND UNDERDRAIN TO PREVENT MIGRATION OF FINES INTO THE UNDERDRAIN. THIS LAYER MAY BE CONSIDERED PART OF THE FILTER BED WHEN BED THICKNESS EXCEEDS 24".

THE MAIN COLLECTOR PIPE FOR UNDERDRAIN SYSTEMS SHALL BE CONSTRUCTED AT A MINIMUM SLOPE OF 0.5%. OBSERVATION WELLS AND/OR CLEAN-OUT PIPES MUST BE PROVIDED (ONE MINIMUM PER EVERY 1,000 SQUARE FEET OF SURFACE AREA).

7. MISCELLANEOUS THESE PRACTICES MAY NOT BE CONSTRUCTED UNTIL ALL CONTRIBUTING DRAINAGE AREA HAS BEEN STABILIZED.

Appendix B.4. Construction Specifications for Environmental Site Design Practices

Table B.4.1 Materials Specifications for Micro-Bioretention, Rain Gardens & Landscape Infiltration-

Material	Specification	Size	Notes
Plantings	see Appendix A, Table A.4	n/a	plantings are site-specific
Planting soil [2' to 4' deep]	loamy sand (60 - 65%) & compost (35 – 40%) or sandy loam (30%), coarse sand (30%) & compost (40%)	n/a	USDA soil types loamy sand or sandy loam; clay content < 5%
Organic content	Min. 10% by dry weight (ASTM D 2974)		
Mulch	shredded hardwood		aged 6 months, minimum; no pine or wood chips
Pea gravel diaphragm	pea gravel: ASTM-D-448	NO. 8 OR NO. 9 (1/8" TO 3/8")	
Curtain drain	ornamental stone: washed cobbles	stone: 2" to 5"	
Geotextile		n/a	PE Type 1 nonwoven
Gravel (underdrains and infiltration berms)	AASHTO M-43	NO. 57 OR NO. 6 AGGREGATE (3/8" to 3/4")	
Underdrain piping	F 758, Type PS 28 or AASHTO M-278	4" to 6" rigid schedule 40 PVC or SDR35	Slotted or perforated pipe; 3/8" perf. @ 6" on center, 4 holes per row; minimum of 3" of gravel over pipes; not necessary underneath pipes. Perforated pipe shall be wrapped with ¼-inch galvanized hardware cloth
Poured in place concrete (if required)	MSHA Mix No. 3; f'c = 3500 psi @ 28 days, normal weight, air-entrained; reinforcing to meet ASTM-615-60	n/a	on-site testing of poured-in-place concrete required: 28 day strength and slump test; all concrete design (cast-in-place or pre-cast) *not using previously approved State or local standards* requires design drawings sealed and approved by a professional structural engineer licensed in the State of Maryland - design to include meeting ACI Code 350.R/89; vertical loading [H-10 or H-20]; allowable horizontal loading (based on soil pressures); and analysis of potential cracking
Sand	AASHTO-M-6 or ASTM-C-33	0.02" to 0.04"	Sand substitutions such as Diabase and Graystone (AASHTO) #10 are not acceptable. No calcium carbonated or dolomitic sand substitutions are acceptable. No "rock dust" can be used for sand.

B.4.7 Supp. 1

CONSTRUCTION REQUIREMENTS:

1. CARE SHALL BE EXERCISED TO PREVENT CONTAMINATION OF FILTERING MATERIAL AND AGGREGATE DURING CONSTRUCTION.
2. NO WATER SHALL BE ALLOWED TO FLOW INTO THE BIORETENTION FACILITIES BEFORE STABILIZATION OF THE SURROUNDING AREA.
3. BIORETENTION AREAS SHALL BE PROTECTED FROM COMPACTION DURING INSTALLATION AND MAINTENANCE OPERATIONS.
4. AT A MINIMUM, REGULAR INSPECTIONS SHALL BE MADE AND DOCUMENTED AT THE FOLLOWING SPECIFIED STAGES OF CONSTRUCTION.
   - 4.1. DURING EXCAVATION TO SUBGRADE
   - 4.2. DURING PLACEMENT AND BACKFILL OF UNDERDRAIN SYSTEMS
   - 4.3. DURING PLACEMENT OF FILTER MEDIA; AND
   - 4.4. UPON COMPLETION OF FINAL GRADING AND ESTABLISHMENT OF PERMANENT VEGETATION.
5. ONCE CONSTRUCTION IS COMPLETE, THE AS-BUILT CERTIFICATION SHALL BE COMPLETED AND COPIES SUBMITTED TO THE OWNER AND TO MDE FOR PROCESSING. AS-BUILT SURVEY DATA (FIELD NOTES) SHALL BE SUBMITTED TO THE OWNER FOR VERIFICATION.

POST CONSTRUCTION REQUIREMENTS:

1. BIORETENTION INLET AND OUTLETS SHALL BE INSPECTED SEASONALLY AND AFTER LARGE RAIN EVENTS. ANY SCOUR OR DAMAGE SHALL BE IMMEDIATELY RECTIFIED.
2. BIORETENTION AREAS SHALL BE IRRIGATED DURING PROLONGED DRY PERIODS.
3. DEAD AND DISEASED VEGETATION CONSIDERED BEYOND TREATMENT SHALL BE REMOVED AND REPLACED. IF SPECIFIC PLANTS ARE NOT SURVIVING, THEY SHALL BE REPLACED WITH MORE APPROPRIATE SPECIES.
4. DISEASED OR DAMAGED PLANTS SHALL BE PRUNED AS REQUIRED TO MAINTAIN HEALTH.
5. SEDIMENTS SHALL BE REMOVED FROM THE SURFACE OF THE FILTER BED WHEN ACCUMULATION EXCEEDS ONE INCH.
6. REPLACE MULCH ANNUALLY WHERE PRACTICE TREATS AREAS WITH HIGH CONCENTRATIONS OF HEAVY METALS. OTHERWISE REPLACE TOP 2-3 INCHES AS NECESSARY.
7. IF WATER PONDS FOR MORE THAN 48-HOURS, REMOVE AND REPLACE THE TOP FEW INCHES OF FILTER MEDIA.

MICRO BIORETENTION MAINTENANCE NOTES

NOT TO SCALE

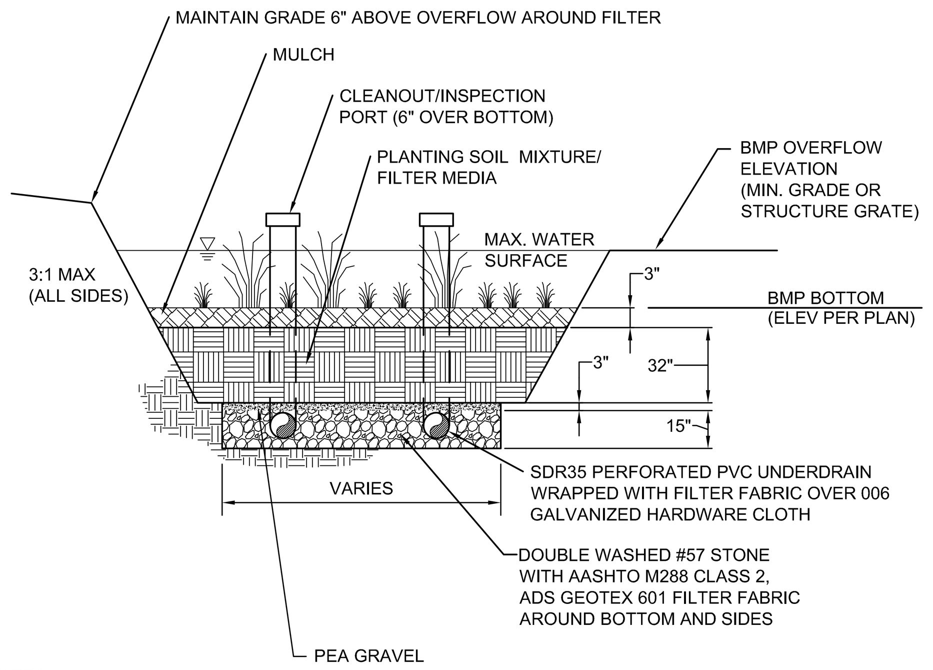

NOTES:

1. EXTENT OF MULCHING MAY VARY BASED ON VEGETATED ARRANGEMENT AND SHALL BE ESTABLISHED BY FINAL LANDSCAPE DESIGN. ALL INDIVIDUAL PLANTING SHALL BE MULCHED. ACCEPTABLE MULCH SHALL BE SHREDDED HARDWOOD ONLY. MULCH MUST BE WELL AGED, UNIFORM IN COLOR, AND FREE OF FOREIGN MATERIAL INCLUDING PLANT MATERIAL. WELL AGED MULCH IS DEFINED AS MULCH THAT HAS BEEN STOCKPILED OR STORED FOR AT LEAST SIX (6) MONTHS.
2. SOIL MIX SHALL CONFORM TO MDE STORMWATER MANUAL, APPENDIX B, TABLE B.4.1, AND TO THE PROJECT SPECIFICATIONS.

MICRO BIORETENTION SCHEMATIC SECTION

NOT TO SCALE

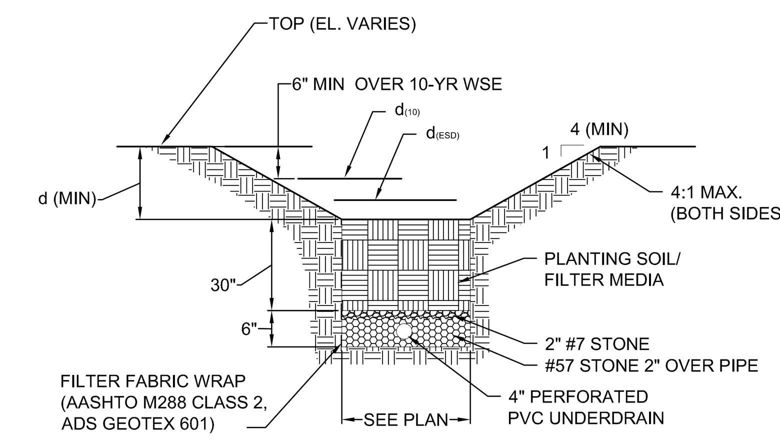

NOTES:

1. SOIL MIXTURE SHALL BE UNIFORM, FREE OF STONES, STUMPS, ROOTS OR OTHER SIMILAR OBJECTS LARGER THAN TWO INCHES. NO OTHER MATERIALS SHALL BE MIXED OR DUMPED WITHIN THE AREA THAT MAY BE HARMFUL TO PLANT GROWTH AND/OR MAINTENANCE. THE MIXTURE SHALL BE FREE OF BERMUDA GRASS, QUACK GRASS, JOHNSON GRASS, MUGWORT, NUTSEDGE, POISON IVY, CANADIAN THISTLE, TEARTHUMB, OR OTHER NOXIOUS WEEDS. AVOID OVER-COMPACTION OF THE BASE OF THE BIORETENTION AREA, AND OF THE PLANTING SOILS DURING CONSTRUCTION.
2. SOIL MIX SHALL CONFORM TO MDE STORMWATER MANUAL, APPENDIX B, TABLE B.4.1, AND TO THE PROJECT SPECIFICATIONS.

BIO-SWALE SCHEMATIC SECTION

NOT TO SCALE

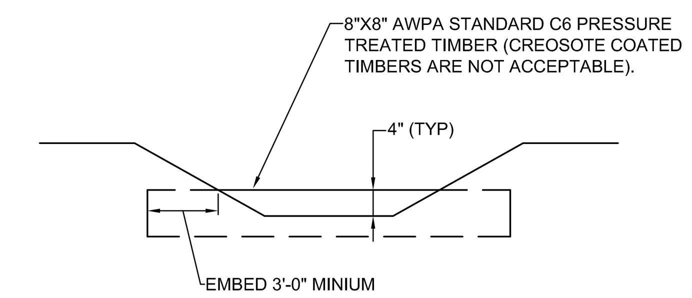

NOTES:

1. LOCATIONS PER PLAN.

BIO-SWALE TIMBER CHECK DAM

NOT TO SCALE

CONSTRUCTION REQUIREMENTS:

1. CARE SHALL BE EXERCISED TO PREVENT CONTAMINATION OF FILTERING MATERIAL DURING CONSTRUCTION.
2. NO WATER SHALL BE ALLOWED TO FLOW INTO THE BIO-SWALES BEFORE STABILIZATION OF THE SURROUNDING AREA.
3. BIO- SWALES SHALL BE PROTECTED FROM COMPACTION DURING INSTALLATION AND MAINTENANCE OPERATIONS.
4. AT A MINIMUM, REGULAR INSPECTIONS SHALL BE MADE AND DOCUMENTED AT THE FOLLOWING SPECIFIED STAGES OF CONSTRUCTION.
   - 4.1. DURING EXCAVATION TO SUBGRADE
   - 4.2. DURING PLACEMENT OF FILTER MEDIA; AND
   - 4.3. UPON COMPLETION OF FINAL GRADING AND ESTABLISHMENT OF PERMANENT VEGETATION.
5. ONCE CONSTRUCTION IS COMPLETE, THE AS-BUILT CERTIFICATION SHALL BE COMPLETED AND COPIES SUBMITTED TO THE OWNER AND TO MDE FOR PROCESSING. AS-BUILT SURVEY DATA (FIELD NOTES) SHALL BE SUBMITTED TO THE OWNER FOR VERIFICATION.

POST CONSTRUCTION REQUIREMENTS:

1. BIO-SWALES SHALL BE INSPECTED TWICE PER YEAR. ANY SCOUR OR DAMAGE SHALL BE IMMEDIATELY RECTIFIED.
2. MOW GRASS IN BIO-SWALES AT LEAST TWICE PER YEAR.
3. BIO-SWALES SHALL BE IRRIGATED DURING PROLONGED DRY PERIODS.
4. REMOVE SEDIMENT, DEBRIS, AND TRASH.
5. RE-SEED SPARSELY VEGETATED AREAS TO MAINTAIN DENSE COVERAGE.
6. REPAIR EROSION ON BOTTOM, SIDE SLOPES, AND INLETS. STABILIZE.
7. IF WATER PONDS FOR MORE THAN 48 HOURS, TILL BOTTOM SOIL AND REVEGETATE.
8. ASSESS PERFORMANCE OF FACILITY AND MAINTAIN THE FOLLOWING AS NECESSARY: SLOPE INTEGRITY, VEGETATIVE HEALTH, SOIL STABILITY, COMPACTION, EROSION, PONDING, AND SEDIMENTATION.

BIO-SWALE MAINTENANCE NOTES

NOT TO SCALE

STORMWATER / BMP AS-BUILT DATA

AS-BUILT DATA FOR MICRO-BIORETENTION BASINS
*TO BE COMPLETED BY CERTIFYING ENGINEER

ID		DESIGN	*AS-BUILT
1.1	NOT USED		
2.1	AREA OF SOIL MIX	1310 SF	
	BOTTOM OF BMP ELEVATION	191.3	
	BOTTOM OF SOIL MIX ELEVATION	188.3	
	BOTTOM OF STONE ELEVATION	186.8	
	OVERFLOW ELEVATION	191.80	
	UNDERDRAIN SIZE/INVERT	4"/187.65	
	PLANTINGS	PER PLAN	
	COMPOSITION OF FILTER MEDIA	PER PLAN	
	OBSERVATION WELL WITH DEPTH TO FILTER BOTTOM INDICATED ON CAP	REQUIRED	
3.1	AREA OF SOIL MIX	1270 SF	
	BOTTOM OF BMP ELEVATION	194.0	
	BOTTOM OF SOIL MIX ELEVATION	191.0	
	BOTTOM OF STONE ELEVATION	189.5	
	OVERFLOW ELEVATION	194.50	
	UNDERDRAIN SIZE/INVERT	4"/190.20	
	PLANTINGS	PER PLAN	
	COMPOSITION OF FILTER MEDIA	PER PLAN	
	OBSERVATION WELL WITH DEPTH TO FILTER BOTTOM INDICATED ON CAP	REQUIRED	
4.1	AREA OF SOIL MIX	1840 SF	
	BOTTOM OF BMP ELEVATION	190.0	
	BOTTOM OF SOIL MIX ELEVATION	187.0	
	BOTTOM OF STONE ELEVATION	185.5	
	OVERFLOW ELEVATION	190.50	
	UNDERDRAIN SIZE/INVERT	4"/185.66	
	PLANTINGS	PER PLAN	
	COMPOSITION OF FILTER MEDIA	PER PLAN	
	OBSERVATION WELL WITH DEPTH TO FILTER BOTTOM INDICATED ON CAP	REQUIRED	
4.2	AREA OF SOIL MIX	1160 SF	
	BOTTOM OF BMP ELEVATION	188.1	
	BOTTOM OF SOIL MIX ELEVATION	185.1	
	BOTTOM OF STONE ELEVATION	183.6	
	OVERFLOW ELEVATION	188.60	
	UNDERDRAIN SIZE/INVERT	4"/184.22	
	PLANTINGS	PER PLAN	
	COMPOSITION OF FILTER MEDIA	PER PLAN	
	OBSERVATION WELL WITH DEPTH TO FILTER BOTTOM INDICATED ON CAP	REQUIRED	

AS-BUILT DATA FOR MICRO-BIORETENTION BASINS
*TO BE COMPLETED BY CERTIFYING ENGINEER

ID		DESIGN	*AS-BUILT
5.1	AREA OF SOIL MIX	1410 SF	
	BOTTOM OF BMP ELEVATION	191.8	
	BOTTOM OF SOIL MIX ELEVATION	188.8	
	BOTTOM OF STONE ELEVATION	187.3	
	OVERFLOW ELEVATION	192.30	
	UNDERDRAIN SIZE/INVERT	4"/187.20	
	PLANTINGS	PER PLAN	
	COMPOSITION OF FILTER MEDIA	PER PLAN	
	OBSERVATION WELL WITH DEPTH TO FILTER BOTTOM INDICATED ON CAP	REQUIRED	
5.2	AREA OF SOIL MIX	840 SF	
	BOTTOM OF BMP ELEVATION	192.3	
	BOTTOM OF SOIL MIX ELEVATION	189.3	
	BOTTOM OF STONE ELEVATION	187.8	
	OVERFLOW ELEVATION	192.80	
	UNDERDRAIN SIZE/INVERT	4"/186.33	
	PLANTINGS	PER PLAN	
	COMPOSITION OF FILTER MEDIA	PER PLAN	
	OBSERVATION WELL WITH DEPTH TO FILTER BOTTOM INDICATED ON CAP	REQUIRED	
5.3	AREA OF SOIL MIX	720 SF	
	BOTTOM OF BMP ELEVATION	192.3	
	BOTTOM OF SOIL MIX ELEVATION	189.3	
	BOTTOM OF STONE ELEVATION	187.8	
	OVERFLOW ELEVATION	192.80	
	UNDERDRAIN SIZE/INVERT	4"/188.37	
	PLANTINGS	PER PLAN	
	COMPOSITION OF FILTER MEDIA	PER PLAN	
	OBSERVATION WELL WITH DEPTH TO FILTER BOTTOM INDICATED ON CAP	REQUIRED	
6.1	AREA OF SOIL MIX	280 SF	
	BOTTOM OF BMP ELEVATION	188.0	
	BOTTOM OF SOIL MIX ELEVATION	185.0	
	BOTTOM OF STONE ELEVATION	183.5	
	OVERFLOW ELEVATION	188.50	
	UNDERDRAIN SIZE/INVERT	4"184.25	
	PLANTINGS	PER PLAN	
	COMPOSITION OF FILTER MEDIA	PER PLAN	
	OBSERVATION WELL WITH DEPTH TO FILTER BOTTOM INDICATED ON CAP	REQUIRED	
6.3	AREA OF SOIL MIX	840 SF	
	BOTTOM OF BMP ELEVATION	189.3	
	BOTTOM OF SOIL MIX ELEVATION	186.3	
	BOTTOM OF STONE ELEVATION	184.8	
	OVERFLOW ELEVATION	189.80	
	UNDERDRAIN SIZE/INVERT	4"/185.42	
	PLANTINGS	PER PLAN	
	COMPOSITION OF FILTER MEDIA	PER PLAN	
	OBSERVATION WELL WITH DEPTH TO FILTER BOTTOM INDICATED ON CAP	REQUIRED	

DATE AS-BUILT ACCEPTED BY MDE: ____________

AS-BUILT DATA FOR BIO-SWALES
*TO BE COMPLETED BY CERTIFYING ENGINEER

ID		DESIGN	*AS-BUILT
6.2	BOTTOM WIDTH	4'	
	SWALE LENGTH	130'	
	AMENDED SOIL DEPTH	30"	
	SIDE SLOPES	4:1	
	CHANNEL SLOPE	1.3%	
	COMPOSITION OF FILTER MEDIA	PER PLAN	
	UNDERDRAIN SIZE	4"	
	MIN. DEPTH (INCL. 6" FREEBOARD)	.64'	
7.1	NOT USED		
7.2	NOT USED		

DATE AS-BUILT ACCEPTED BY MDE: ____________

STORMWATER / BMP CERTIFICATIONS:

PROFESSIONAL CERTIFICATION:

I HEREBY CERTIFY THAT THESE DOCUMENTS WERE PREPARED OR APPROVED BY ME, AND THAT I AM A DULY LICENSED PROFESSIONAL ENGINEER UNDER THE LAWS OF THE STATE OF MARYLAND.

LICENSE NO.

EXPIRATION DATE

AS BUILT CERTIFICATION:

I HEREBY CERTIFY THAT THE STORMWATER MANAGEMENT FACILITY (FACILITIES) SHOWN ON THE PLANS HAS (HAVE) BEEN CONSTRUCTED IN ACCORDANCE WITH THE PLANS INCLUDED UNDER THE MARYLAND DEPARTMENT OF THE ENVIRONMENT APPROVAL, NUMBER 12-SF-0102, EXCEPT AS NOTED IN RED ON THE "AS BUILT" DRAWINGS. FURTHERMORE, THE RED-NOTED EXCEPTIONS DO NOT ADVERSELY AFFECT THE INTENDED PERFORMANCE OF THE FACILITY (FACILITIES).

~~MICRO BIORETENTION 1.1~~, MICRO BIORETENTION 2.1,
MICRO BIORETENTION 3.1, MICRO BIORETENTION 4.1,
MICRO BIORETENTION 4.2, MICRO BIORETENTION 5.1,
MICRO BIORETENTION 5.2, MICRO BIORETENTION 5.3,
MICRO BIORETENTION 6.1, MICRO BIORETENTION 6.3,
BIO-SWALE 6.2, ~~BIO-SWALE 7.1, BIO-SWALE 7.2~~

FACILITY IDENTIFICATION

NAME (PRINTED) SIGNATURE

MARYLAND REGISTRATION NUMBER DATE

100% SUBMITTAL

AECOM

AECOM TECHNICAL SERVICES, INC.
3101 WILSON BOULEVARD
SUITE 900
ARLINGTON, VA 22201

T: 703-682-4900 F: 703.682.4901
www.aecom.com

SEAL AREA
STATE OF MARYLAND ERIC P. BUCK 26212 REGISTERED PROFESSIONAL ENGINEER
10/12/2012

KEY PLAN

REV	DATE	DESCRIPTION	S&R BR.	CUSTOMER	PM	SECT. HEAD

	INITIALS	DATE
DRAWN BY	MLF	06/16/11
CHECKED BY	FM	
A-E MANAGER	EW	
ENVIRONMENTAL BRANCH	JH	
SAFETY BRANCH	CS	
CM	MMD	
PM	RWP	
CUSTOMER	JWB	
ENG. BRANCH	DGL	

SWM CERTIFICATIONS AND DETAILS

C-505

FLIGHT PROJECTS BUILDING

NATIONAL AERONAUTICS AND SPACE ADMINISTRATION
GODDARD SPACE FLIGHT CENTER GREENBELT, MARYLAND
FACILITIES MANAGEMENT DIVISION

DATE ISSUED	CoF CODE OR WR#	AECOM PROJECT NO.	SCALE
10/12/2012	12GXAZ	60187636	

FILE DATE: 10/10/2012 4:18:36 PM

File Location: M:\WATER\60190712 GODDARD SPACE FLIGHT CENTER\0001\CADD\DWG\90712C_505.DWG Plot CTB File: ----; Page Setup Name: ----; InsUnits: 2; LTScale: 1.00 Measurement: 0;
Plotted By: FRAZIER, MICHELLE; Plot Date: Wednesday, October 10, 2012;

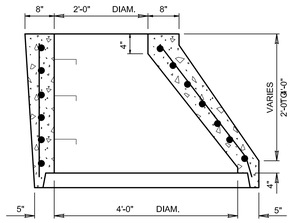

ALTERNATE ECCENTRICAL

CONE UNIT

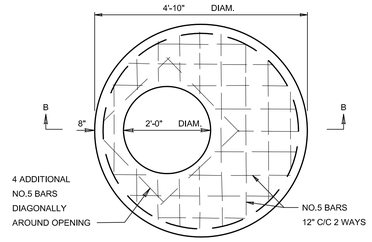

FLAT SLAB TOP

(SHOWN WITHOUT FRAME & COVER)

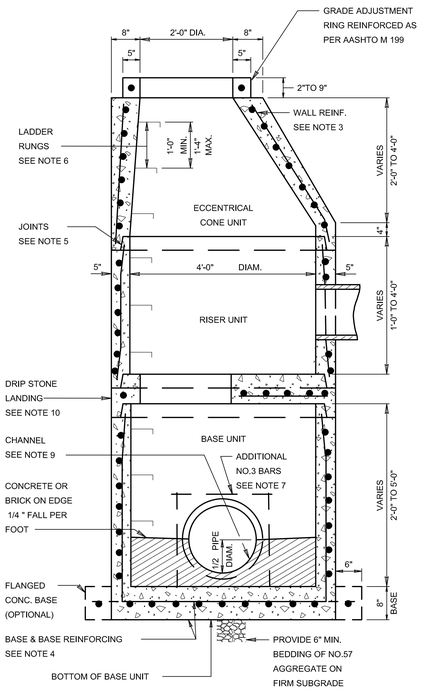

SECTION VIEW

(SHOWN WITHOUT FRAME & COVER)

STANDARD TYPE A MANHOLE
FRAME & COVER SEE STD.
MD 383.31 & MD 383.32

FRAME ANCHORAGE
SEE STD. MD 384.02

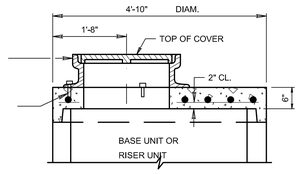

SECTION B-B

NOTES

1. MANHOLES SHALL BE CONSTRUCTED IN ACCORDANCE WITH AASHTO M 199.
2. CONCRETE SHALL BE MIX NO. 6 (4500 PSI).
3. WALL REINFORCEMENT FOR BASE UNITS. RISER UNITS AND ECCENTRICAL CONE UNITS SHALL BE REINFORCEMENT BASE OR WELDED WIRE FABRIC WITH A MINIMUM AREA OF 0.12 IN. 2 FT. FOR THE 48" DIAMETER MANHOLES. WELDED WIRE FABRIC SHALL CONFORM TO ASTM A 185 AND A 82. REINFORCEMENT BARS SHALL MEET ASTM A 615.GRADE 60.
4. BASE REINFORCEMENT SHAll BE REINFORCEMENT BARS OR WELDED WIRE FABRIC WITH A MINIMUM AREA OF 0.14 IN. 2 FT. THE BASE MAY BE CAST MONOLITHIC WITH THE UNIT OR JOINTED PER MANUFACTURER'S DESIGN.
5. THE MANUFACTURER SHALL FORM MALE AND FEMALE ENDS OF JOINTS USING THIER DESIGN. THE JOINTS SHALL BE SEALED BY THE CONTRACTOR AND MADE WATERTIGHT USING (WHERE APPLICABLE) MORTER, RUBBER O-RING GASKETS MEETING ASTM C 361 & C 443 OR FLEXIBLE PLASTIC GASKETS MEETING AASHTO M 198 TYPE B.
6. LADDER RUNGS SHALL BE INSTALLED IN VERTICAL ALIGNMENT AT 1'-4" MAXIMUM C/C. RUNG TYPES SHALL BE IN ACCORDANCE WITH SPECIFICATIONS.
7. WHEN THE DISTANCE BETWEEN MULTIPLE OPENINGS IN THE BASE UNIT OR ANY RISOR UNIT IS LESS THAN 6" ADDITIONAL NO. 3 BARS ARE REQUIRED AROUND OPENINGS.
8. LIFT HOLES OR LIFT EYES SHALL BE PROVIDED IN EACH SECTION FOR HANDLING.
9. MIX NO. 2 CONCRETE OR BRICK CHANNEL SHALL BE PROVIDED IN THE FIELD AND SHALL SLOPE 2" PER FOOT TOWARD OUTLET OR AS DIRECTED BY THE OWNER.
10. THE DRIP STONE LANDING SHALL BE USED ONLY WHEN THERE ARE PIPES CONNECTED TO THE RISER UNITS.
11. MINIMUM DEPTH PAYMENT PER EACH SHALL BE 9'-0" MEASURED FROM THE BOTOM OF THE BASE UNIT TO THE TOP OF THE MANHOLE COVER VERTICAL DEPTH PAYMENT PER LINEAR FOOT SHALL INCLUDE ALL DEPTHS IN EXCESS OF 9'-0". THE COST OF THE DRIP STONE LANDING. NO. 57 AGGREGATE GROUT, SEALANT, AND ALL NECESSARY APPURTENANCES SHALL BE INCIDENTAL TO THE PRICE BID.

48" DIAMETER PRECAST MANHOLE FOR 12" TO 24" PIPES

NO SCALE (MD SHA STD NO. 384.01)

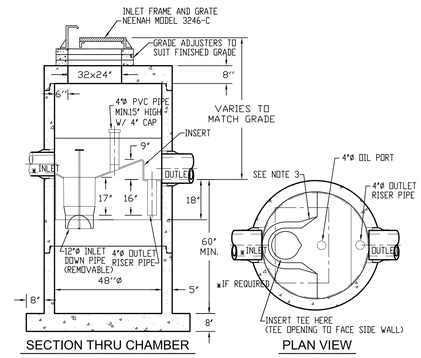

SECTION THRU CHAMBER

PLAN VIEW

NOTES

1. THE WATER QUALITY STRUCTURE SHALL BE CAPABLE OF REMOVING 80% OF THE AVERAGE ANNUAL POST DEVELOPMENT TOTAL SUSPENDED SOLIDS (TSS) LOAD FROM 90% OF THE AVERAGE ANNUAL RAINFALL WITH THE FOLLOWING DESIGN CONDITIONS:

   WATERSHED AREA: 0.19 AC
   IMPERVIOUS COVER: 0.13 AC
   PEAK 10-YR DISCHARGE (Q10): 0.9 CFS

2. THE USE OF FLEXIBLE CONNECTIONS IS RECOMMENDED AT THE INLETS AND OUTLETS WHERE APPLICABLE.
3. THE STRUCTURE COVER SHALL BE POSITIONED OVER THE INLET DROP PIPE AND THE OIL PORT.
4. REFER TO STORM PROFILES FOR STRUCTURE ELEVATION REQUIREMENTS.
5. THE DEPICTED WATER QUALITY INLET IS BASED ON "STORMCEPTOR", MODEL STC 450. ALTERNATE WATER QUALITY STRUCTURE CONFIGURATIONS MEETING THE SAME FUNCTIONAL REQUIREMENTS MAY BE SUBMITTED FOR REVIEW AND APPROVAL BY THE OWNER.
6. WATER QUALITY INLET SHALL BE INSPECTED QUARTERLY DURING THE FIRST YEAR AFTER INSTALLATION TO ACCURATELY DETERMINE MAINTENANCE SCHEDULE.

WATER QUALITY INLET

NO SCALE

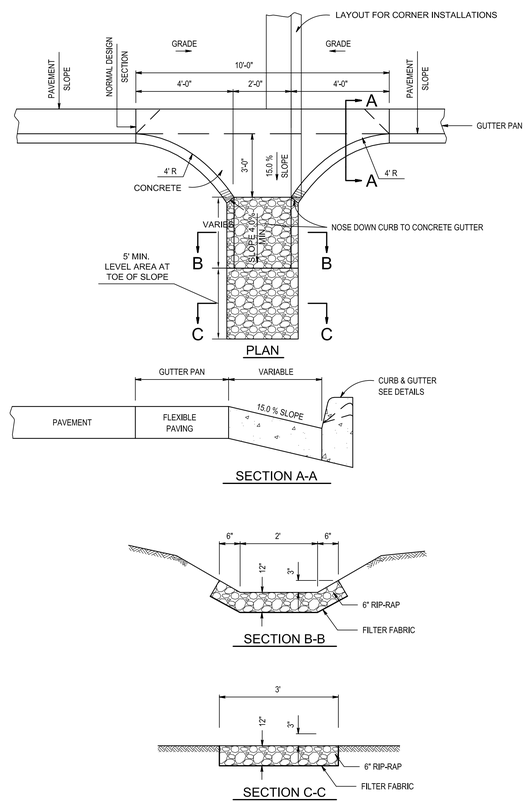

PAVED WATERWAY

NO SCALE

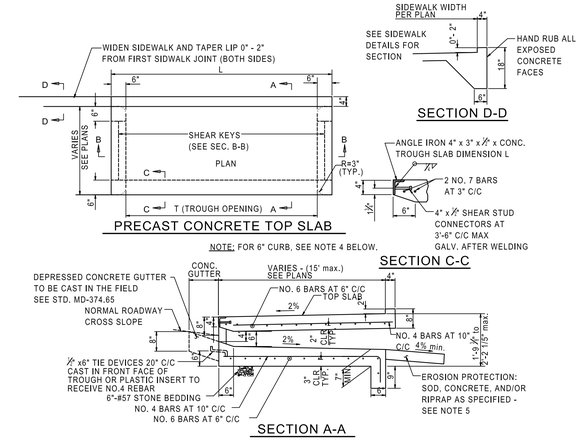

SLAB TYPE	L	T
I	6'-0"	5'-0"
II	11'-0"	10'-0"

NOTES:

1. CONCRETE SHALL BE MIX # 6 (4500 PSI).
2. REINFORCEMENT STEEL SHALL MEET THE REQUIREMENTS OF ASTM A615, GRADE 60.
3. ANGLE IRON AND SHEAR STUD CONNECTORS SHALL BE GALVANIZED AFTER WELDING IN ACCORDANCE WITH ASTM A 123.
4. SEE DETAIL FOR CURB REQUIREMENTS.
5. EROSION PROTECTION TO 6" MINIMUM THICKNESS CLASS C RIP RAP WITH FABRIC UNDERLAY. INSTALL RIPRAP OUTFALL AND LANDING PER PAVED WATERWAY DETAIL.

CURB OPENING UNDER SIDEWALK

NO SCALE

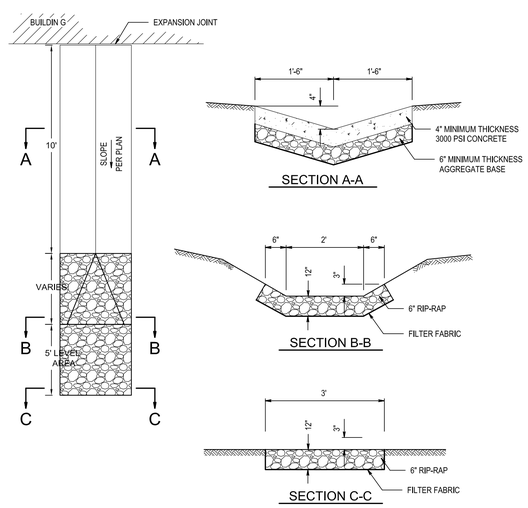

ROOF LEADER WATERWAY

NO SCALE

100% SUBMITTAL

AECOM

AECOM TECHNICAL SERVICES, INC.
3101 WILSON BOULEVARD
SUITE 900
ARLINGTON, VA 22201

T: 703-682-4900 F: 703.682.4901
www.aecom.com

SEAL AREA

STATE OF MARYLAND
ERIC F. EUDY
No. 26256
PROFESSIONAL ENGINEER
10/12/2012

KEY PLAN

REV	DATE	DESCRIPTION	S&R BR.	CUSTOMER	PM	SECT. HEAD

	INITIALS	DATE
DRAWN BY	MLF	06/16/11
CHECKED BY	FM	
A-E MANAGER	EW	
ENVIRONMENTAL BRANCH	JH	
SAFETY BRANCH	CS	
CM	MMD	
PM	RWP	
CUSTOMER	JWB	
ENG. BRANCH	DGL	

STORMWATER MANAGEMENT DETAILS

C-506

FLIGHT PROJECTS BUILDING

NATIONAL AERONAUTICS AND SPACE ADMINISTRATION

GODDARD SPACE FLIGHT CENTER GREENBELT, MARYLAND
FACILITIES MANAGEMENT DIVISION

DATE ISSUED	CoF CODE OR WR#	AECOM PROJECT NO.	SCALE
10/12/2012	12GXAZ	60187636	

FILE DATE: 10/10/2012 1:56:12 PM

File Location: M:\WATER\60190712 GODDARD SPACE FLIGHT CENTER\0001\CADD\DWG\90712C_506.DWG
Plotted By: FRAZIER, MICHELLE; Plot Date: Wednesday, October 10, 2012; Plot CTB File: ----; Page Setup Name: ----; Inslinks: 2; LTScale: 1.00 Measurement: 0;

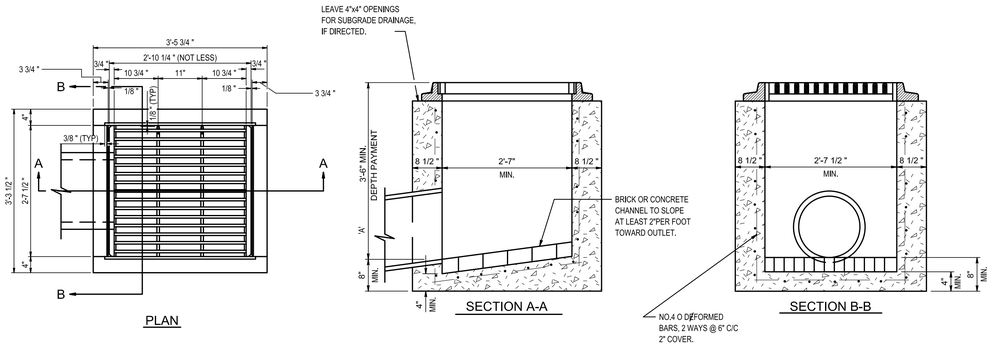

PLAN

SECTION A-A

SECTION B-B

NOTES

1. INLET SHALL BE CONSTRUCTED OF REINFORCED CONCRETE (MIX NO.2). SEE LATEST S.H.A. SPECIFICATIONS FOR INLETS.
2. REINFORCEMENT REQUIRED ON OUTSIDE, AS WELL AS ON INSIDE, OF WALLS BELOW 7'-0" WHEN 'A' IS GREATER THAN 7'-0", SPACING, SAME AS INSIDE OF WALL.
3. PLACE 1/4 " EXPANSION MATERIAL OF SAME TYPE APPROVED FOR PAVEMENT BETWEEN THE FRAME AND ABUTTING RIGID PAVEMENT, AND BETWEEN ENDS OF INLET CURB AND NORMAL CURB.
4. SIZE, TYPE AND DIRECTION OF INLET CONNECTION WILL VARY TO SUIT CONDITIONS.
5. "BRICK FOR MASONRY", TO COMPLY WITH THE LATEST S.H.A. SPECIFICATIONS.
6. FRAMES & GRATES TO BE SQUARE, FLAT, & TRUE.
7. STRUCTURAL STEEL SHALL BE ASTM DESIGNATION A 36.
8. FRAMES AND GRATES TO BE GALVANIZED AFTER FABRICATION IN ACCORDANCE WITH ASTM A123.
9. APPROX WEIGHTS:
   SINGLE FRAME = 175# SINGLE GRATE = 260#
10. SEE LATEST SHA SPECIFICATIONS.

STANDARD TYPE S INLET SINGLE GRATE

MD-SHA STD NO. 379.01 &379.06 / NO SCALE

NEENAH FOUNDRY

R-3246-CL- Combination Inlet, With Curb Box

R-3246-CL

Combination Inlet Frame, Grate, Curb Box

Heavy Duty

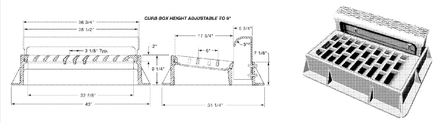

CATALOG NUMBER	GRATE TYPE	SQ. FT. OPEN	WEIR PERIMETER LINEAL FEET
R-246-CL	L	1.9	5.0
R-246-CL	C	2.1	5.0

Standard Grate (shown): Type L
Also available with grate Type C.

Type C

Catalog Number	A	B	C	E	F
R-3246-CL	17-3/4 x 35-1/2	2	18-1/4 x 32-7/8	31-1/4 x 43	6

All dimensions are listed in inches unless otherwise noted.

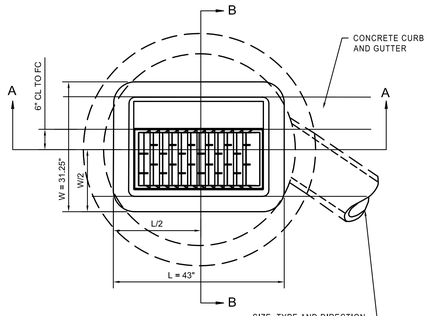

PLAN

SIZE, TYPE AND DIRECTION OF INLET CONNECTION WILL VARY TO SUIT CONDITIONS.

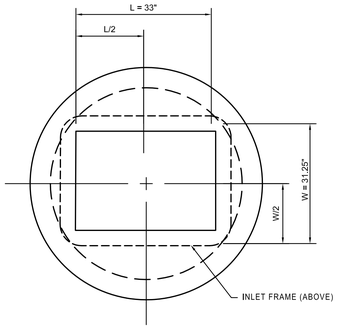

TOP SLAB LAYOUT

NEENAH FOUNDRY

R-3251- Combination Inlet, without curb box

R-3251

Catch Basin Inlet Frame, Convex Grate

Heavy Duty

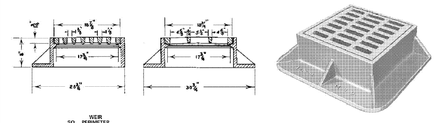

CATALOG NUMBER	GRATE TYPE	SQ. FT. OPEN	WEIR PERIMETER LINEAL FEET
R-3251	C	1.9	6.2

Catalog Number	A	B	C	E	F
R-3251	18-7/8 x 18-3/4	1-3/4	17-3/4 x 17-3/4	30-7/8 x 25-3/4	8

All dimensions are listed in inches unless otherwise noted.

LEVELING BRICK (TYP)

NOTES

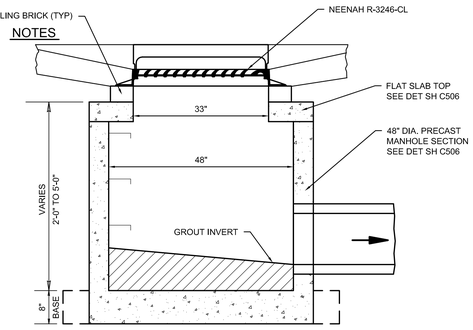

SECTION A-A

COMBINATION INLET

NO SCALE

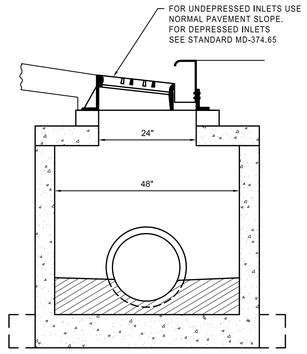

SECTION B-B

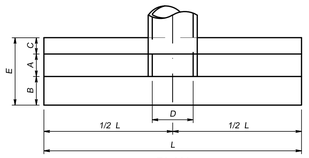

PLAN

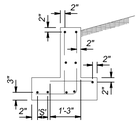

DISPOSITION OF BARS DETAIL

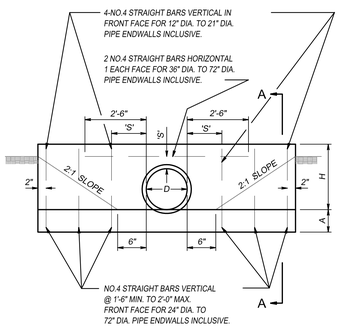

ELEVATION

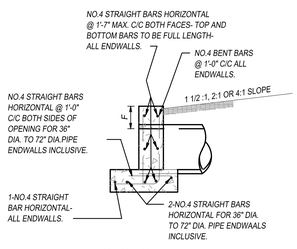

SECTION A-A

QUANTITIES FOR ESTIMATING PURPOSES ONLY

OPENING		DIMENSIONS							QUANTITIES	
D INCHES	AREA SQ.FT.	A	B	C	E	F	H	L	CONC. C.Y.	STEEL LBS.
4 - 12	0.79	9"	6"	6"	1'-9"	9"	1'-9"	6'-6"	0.61	41
15	1.23	9"	6"	6"	1'-9"	9"	2'-0"	7'-9"	0.77	47
18	1.77	9"	6"	6"	1'-9"	9"	2'-3"	9'-0"	0.95	54
21	2.40	9"	6"	6"	1'-9"	9"	2'-6"	10'-3"	1.14	70
24	3.14	9"	14"	6"	2'-5"	9"	2'-9"	11'-6"	1.56	80
27	3.98	9"	14"	6"	2'-5"	9"	3'-0"	12'-10"	1.82	88
30	4.91	9"	14"	6"	2'-5"	12"	3'-6"	14'-2"	2.22	98
33	5.94	9"	14"	6"	2'-5"	12"	3'-9"	15'-5"	2.48	105
36	7.07	12"	16"	10"	3'-2"	12"	4'-0"	16'-8"	4.16	182
42	9.62	12"	16"	10"	3'-2"	12"	4'-6"	19'-2"	5.07	206
48	12.57	12"	16"	10"	3'-2"	12"	5'-0"	21'-8"	6.09	244
54	15.90	12"	20"	12"	3'-8"	12"	5'-6"	24'-2"	7.62	275
60	19.64	12"	20"	12"	3'-8"	12"	6'-0"	26'-8"	8.82	304
72	28.27	12"	20"	12"	3'-8"	12"	7'-0"	31'-8"	11.46	377

CONCRETE ENDWALL

NO SCALE

'S' DISTANCES

4" FOR 12" DIA. TO 21" DIA. PIPES INCLUSIVE.
6" FOR 24" DIA. TO 36" DIA. PIPES INCLUSIVE.
8" FOR 42" DIA. TO 72" DIA. PIPES INCLUSIVE.

GENERAL NOTES

SPECIFICATIONS: LATEST S.H.A.
CONCRETE SHALL BE MIX NO.2
REINFORCING: DEFORMED STEEL BARS-NO.4
CHAMFER: ALL EXPOSED EDGES 1"x1" OR AS DIRECTED

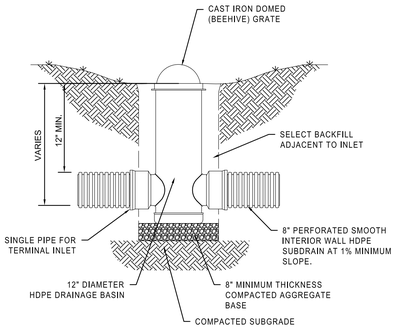

1. INLETS SHALL BE INSTALLED AT 100' MAXIMUM SPACING, UNLESS OTHERWISE INDICATED ON PLANS.
2. SUBDRAIN SHALL BE INSTALLED IN FILTER FABRIC SOCK AND INSTALLED WITH 6" MINIMUM THICKNESS #57 STONE ALL AROUND.

SUBDRAIN WITH SURFACE INLET

NO SCALE

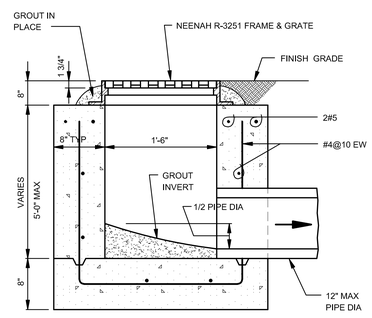

SECTION

YARD INLET

NO SCALE

100% SUBMITTAL

AECOM

AECOM TECHNICAL SERVICES, INC.
3101 WILSON BOULEVARD
SUITE 900
ARLINGTON, VA 22201

T: 703-682-4900 F: 703.682.4901
www.aecom.com

SEAL AREA

STATE OF MARYLAND ERIC P. GUDA No. 26320 PROFESSIONAL ENGINEER
10/12/2012

KEY PLAN

REV	DATE	DESCRIPTION	S&R BR.	CUSTOMER	PM	SECT. HEAD

	INITIALS	DATE
DRAWN BY	MLF	06/16/11
CHECKED BY	FM	
A-E MANAGER	EW	
ENVIRONMENTAL BRANCH	JH	
SAFETY BRANCH	CS	
CM	MMD	
PM	RWP	
CUSTOMER	JWB	
ENG. BRANCH	DGL	

STORMWATER MANAGEMENT DETAILS

C-507

FLIGHT PROJECTS BUILDING

NATIONAL AERONAUTICS AND SPACE ADMINISTRATION
GODDARD SPACE FLIGHT CENTER GREENBELT, MARYLAND
FACILITIES MANAGEMENT DIVISION

DATE ISSUED	CoF CODE OR WR#	AECOM PROJECT NO.	SCALE
10/12/2012	12GXAZ	60187636	

File Location: M:\WATER\60190712 GODDARD SPACE FLIGHT CENTER\0001\CADD\DWG\60712C_507.DWG Page Setup Name: ----; Plot CTB File: ----; LTScale: 1.00 Measurement: 0;
Plotted By: FRAZIER, MICHELLE; Plot Date: Wednesday, October 10, 2012; Instlnks: 2;
FILE DATE: 10/10/2012 1:59:29 PM

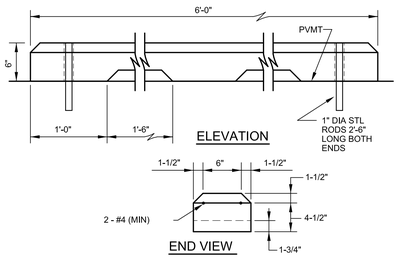

PRECAST WHEEL STOP

NO SCALE

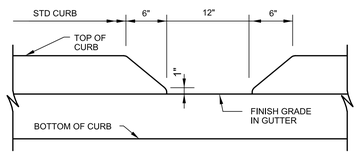

CURB BREAK

NO SCALE

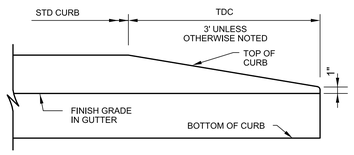

TURNED DOWN CURB (TDC) ELEVATION

NO SCALE

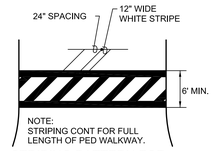

STRIPING PATTERN FOR PEDESTRIAN WALKWAY

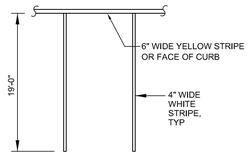

STRIPING PATTERN FOR SINGLE PARKING STALL

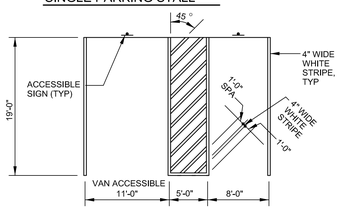

TYPICAL ACCESSIBLE PARKING SPACES

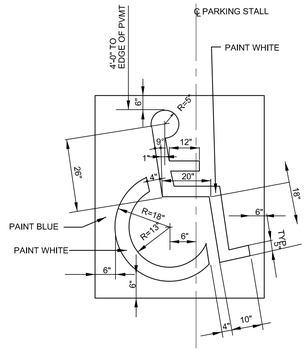

STRIPING PATTERN FOR ACCESSIBLE PARKING DETAIL

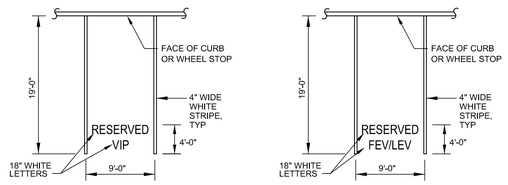

STRIPING PATTERN FOR VIP PARKING STALL

STRIPING PATTERN FOR FEV/LEV PARKING STALL

NOTE:
1. RESERVED SPACES (VIP AND FEV/LEV) SHALL HAVE THE WORD "RESERVED" STENCILED ON THE FACE OF CURB OR WHEEL STOP FOR EACH SPACE. LETTERING SHALL BE BLACK ON A WHITE BACKGROUND.

PAVEMENT MARKING DETAILS

NO SCALE

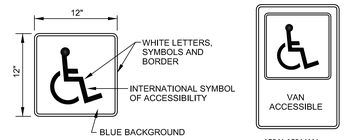

SIGNAGE

NO SCALE

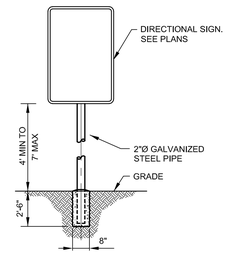

ALL DIRECTIONAL SIGNAGE SHALL COMPLY WITH THE MANUAL OF UNIFORM TRAFFIC CONTROL DIVICES (MUTCD), 2009 EDITION.

SIGN INSTALLATION DETAIL

NO SCALE

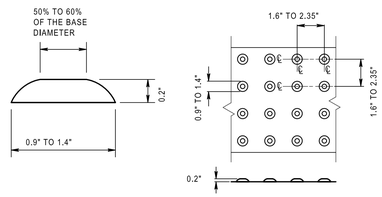

DETECTABLE WARNING

NO SCALE

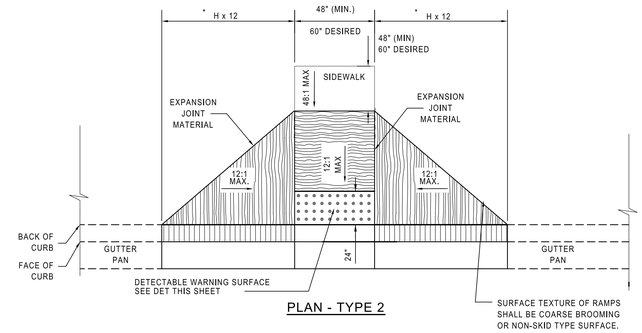

PLAN - TYPE 2

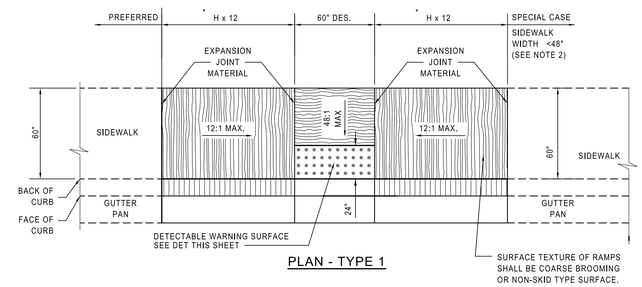

PLAN - TYPE 1

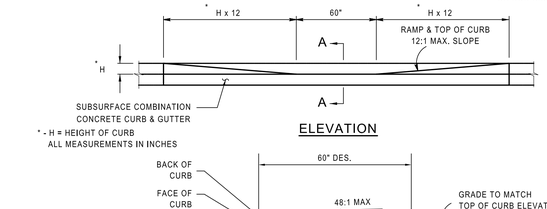

ELEVATION

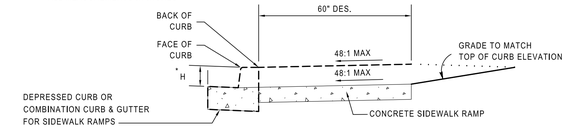

SECTION A-A

CURB CUT RAMP

NO SCALE

100% SUBMITTAL

AECOM

AECOM TECHNICAL SERVICES, INC.
3101 WILSON BOULEVARD
SUITE 900
ARLINGTON, VA 22201

T: 703-682-4900 F: 703.682.4901
www.aecom.com

SEAL AREA

STATE OF MARYLAND — ERIC P. BUCKLEY — No. 24922 — PROFESSIONAL ENGINEER
10/12/2012

KEY PLAN

REV	DATE	DESCRIPTION	S&R BR.	CUSTOMER	PM	SECT. HEAD

	INITIALS	DATE
DRAWN BY	MLF	06/16/11
CHECKED BY	EPB	
A-E MANAGER	EW	
ENVIRONMENTAL BRANCH	JH	
SAFETY BRANCH	CS	
CM	MMD	
PM	RWP	
CUSTOMER	JWB	
ENG. BRANCH	DGL	

SITE DETAILS

C-511

FLIGHT PROJECTS BUILDING

NATIONAL AERONAUTICS AND SPACE ADMINISTRATION

GODDARD SPACE FLIGHT CENTER GREENBELT, MARYLAND
FACILITIES MANAGEMENT DIVISION

DATE ISSUED	CoF CODE OR WR#	AECOM PROJECT NO.	SCALE
10/12/2012	12GXAZ	60187636	

FILE DATE: 10/10/2012 1:58:41 PM

File Location: M:\WATER\60190712 GODDARD SPACE FLIGHT CENTER\0001\CADD\DWG\90712C_511.DWG Page Setup Name: ----; InsUnits: 2; LTScale: 1.00 Measurement: 0;
Plotted By: FRAZIER, MICHELLE; Plot Date: Wednesday, October 10, 2012; Plot CTB File: ----;

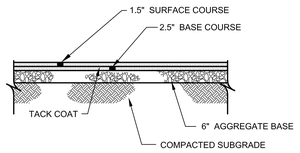

LIGHT DUTY PAVEMENT

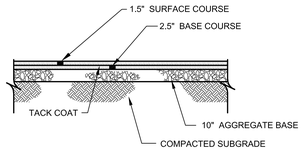

HEAVY DUTY PAVEMENT

PAVEMENT DETAIL
NO SCALE

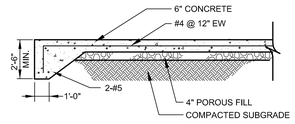

TYPICAL DUMPSTER PAD
NO SCALE

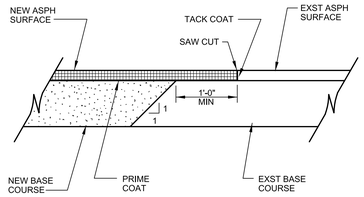

PAVEMENT TRANSITION DETAIL
NO SCALE

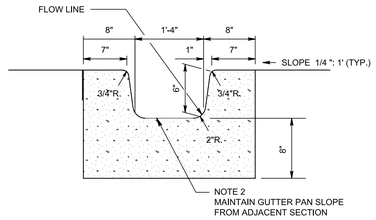

NOTES

1. MAXIMUM JOINT SPACING FOR CONCRETE CURB AND COMBINATION CURB & GUTTER IS 10'. SEE SPECIFICATION FOR LOCATIONS AND DESCRIPTION OF TREATMENT FOR THE TYPES OF JOINTS USED.
2. STANDARD CURB & GUTTER (CG) GUTTER PAN SHALL BE SLOPED TOWARD CURB AT 3/4":1'.
3. SEE DETAIL FOR GRATING REQUIREMENTS FOR SIDEWALK CROSSINGS.

THROUGH GUTTER FOR DRAINAGE
NO SCALE

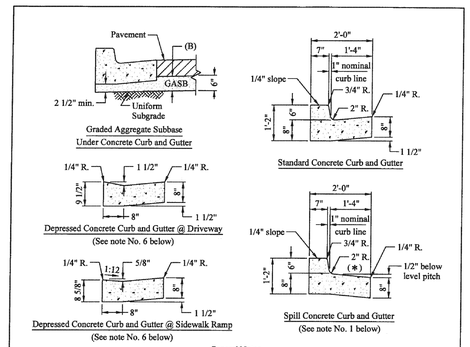

General Notes

1. Use of spill concrete curb and gutter requires special Departmental approval, except for "Urban Major Collector Road" design.
2. The slope (*) of a spill concrete curb and gutter pan shall be equal to the cross slope of roadway paving.
3. Install expansion joints using 1/2" preformed non-extruding joint filler, at 100' intervals, at the beginning and end of curves with less than 100' radii, at structures, and at midpoints of curb returns.
4. All construction joints shall be located at 10' intervals. The contraction joints shall be constructed to a depth equal to 1/4 of the depth of the thickness of the concrete.
5. All concrete shall be Class I (MSHA Mix No. 3) air-entrained, unless otherwise approved by the Department. The surface shall be brush finished.
6. The depressed concrete curb and gutter sections shall be used at all driveway aprons and sidewalk ramps.
7. Preformed joint fillers shall conform to M 153. The bituminous fiber type joint shall conform to M 213, with the bitumen content determined using T 164.
8. Granite curb and gutter may be required under certain conditions.
9. Provide uniform subgrade under entire roadway section.
10. All new construction within the County right-of-way shall comply with Federal accessibility guidelines of the Americans with Disabilities Act and Fair Housing regulations.

APPROVED:

DIRECTOR	DATE
REVISION DATES	APPROVED BY:

DEPARTMENT OF PUBLIC WORKS AND TRANSPORTATION
Prince George's County, MD

Concrete Curb and Gutter — STD. 300.01

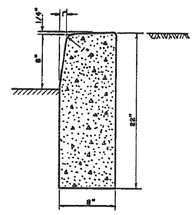

GENERAL NOTE:
CONSTRUCT EXPANSION JOINTS AT 100' INTERVALS, AT BEGINNING AND END OF SHORT RADIUS (LESS THAN 100') CURVES, AND AT STRUCTURES, USING 1/2" PREFORMED BITUMINOUS EXPANSION JOINT FILLER, NON EXTRUDING. USE CLASS I (AIR-ENTRAINED) CONCRETE.

REVISED		PRINCE GEORGE'S COUNTY DEPARTMENT OF PUBLIC WORKS AND TRANSPORTATION	CONCRETE CURB	STANDARD 3
DATE	BY			
11/18/71	S.E.H.	APPROVED:		
10-18-79	U.M.M.	DIRECTOR — DATE 7-1-68		

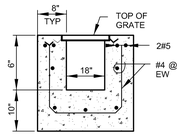

CROSS SECTION

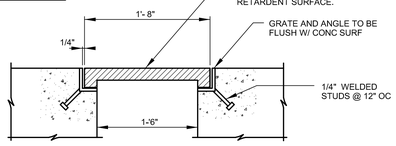

FRAME AND GRATE SECTION

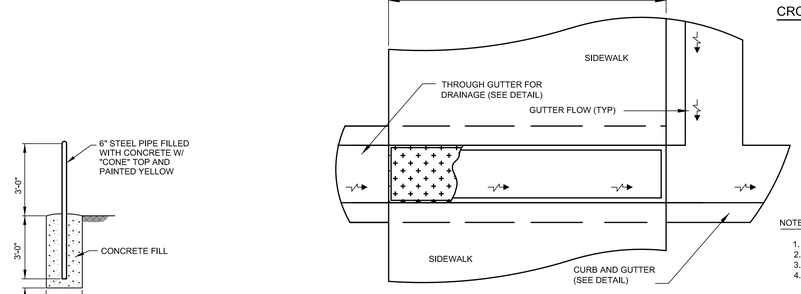

PLAN

NOTES:

1. GRATE AND FRAME SHALL BE GRAY CAST IRON OR DUCTILE CAST IRON.
2. GRATE SHALL BE BOLTED TO FRAME.
3. FRAME AND GRATES SHALL BE RATED FOR PEDESTRIAN TRAFFIC.
4. GRATES SHALL BE SOLID SLIP RETADENT CASTINGS, NEENAH R-4990-FX, DEETER FOUNDRY 3990-F, EAST JORDON IRON WORKS 6956A, OR SIMILAR MODEL APPROVED BY OWNER.
5. FRAME INSTALLATION AND ANCHORING SHALL BE IN ACCORDANCE WITH MANUFACTURERS PUBLISHED RECOMMENDATIONS.

THROUGH GUTTER WALK CROSSING
NO SCALE

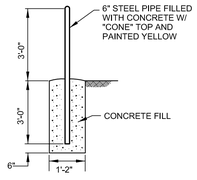

BOLLARD
NO SCALE

100% SUBMITTAL

AECOM

AECOM TECHNICAL SERVICES, INC.
3101 WILSON BOULEVARD
SUITE 900
ARLINGTON, VA 22201

T: 703-682-4900 F: 703.682.4901
www.aecom.com

SEAL AREA

STATE OF MARYLAND — ERIC F. WUCK — PROFESSIONAL ENGINEER — No. 29993
10/12/2012

KEY PLAN

REV	DATE	DESCRIPTION	S&R BR.	CUSTOMER	PM	SECT. HEAD

	INITIALS	DATE
DRAWN BY	MLF	06/16/11
CHECKED BY	FM	
A-E MANAGER	EW	
ENVIRONMENTAL BRANCH	JH	
SAFETY BRANCH	CS	
CM	MMD	
PM	RWP	
CUSTOMER	JWB	
ENG. BRANCH	DGL	

SITE DETAILS

C-512

FLIGHT PROJECTS BUILDING

NATIONAL AERONAUTICS AND SPACE ADMINISTRATION
GODDARD SPACE FLIGHT CENTER GREENBELT, MARYLAND
FACILITIES MANAGEMENT DIVISION

DATE ISSUED	CoF CODE OR WR#	AECOM PROJECT NO.	SCALE
10/12/2012	12GXAZ	60187636	

File Location: M:\WATER\60190712 GODDARD SPACE FLIGHT CENTER\0001\CADD\DWG\60712C_512.DWG Page Setup Name: ----; InsUnits: 2; LTScale: 1.00 Measurement: 0;
Plotted By: FRAZIER, MICHELLE; Plot Date: Wednesday, October 10, 2012; Plot CTB File: ----;
FILE DATE: 10/10/2012 4:23:21 PM

NOTES THIS SHEET:

1. FIRE HYDRANTS SHALL BE INSTALLED WITH A MINIMUM OF 18 INCHES BETWEEN THE FINISHED GRADE AND THE HYDRANT OUTLET PER NASA STANDARDS.
2. FIRE HYDRANTS SHALL BE INSTALLED NO LESS THAN THREE (3) FEET AND NO MORE THAN SEVEN (7) FEET FROM THE CURB LINE PER NASA STANDARDS.

BEND TYPE	PIPE DIAMETER	THRUST BLOCK DIMENSIONS L	H	F	T
1/32	4"	1'-0"	1'-0"	0'-5"	1'-0"
	6"	1'-3"	1'-0"	0'-5"	1'-0"
	8"	1'-6"	1'-3"	0'-5"	1'-0"
	10"	1'-9"	1'-9"	0'-6"	1'-0"
	12"	2'-3"	2'-0"	0'-6"	1'-0"
	14"	3'-0"	2'-0"	0'-6"	1'-0"
	16"	3'-6"	2'-0"	1'-0"	1'-6"
1/16	4"	1'-6"	1'-6"	0'-5"	1'-0"
	6"	1'-9"	1'-6"	0'-5"	1'-0"
	8"	2'-0"	2'-0"	0'-5"	1'-0"
	10"	3'-0"	2'-0"	0'-10"	1'-0"
	12"	4'-0"	2'-0"	0'-10"	1'-6"
	14"	4'-9"	2'-3"	1'-0"	2'-0"
	16"	5'-0"	3'-0"	1'-0"	2'-0"
1/8	4"	1'-6"	1'-6"	0'-6"	1'-0"
	6"	3'-0"	1'-6"	0'-6"	1'-0"
	8"	4'-0"	2'-0"	0'-6"	1'-0"
	10"	5'-0"	2'-6"	0'-10"	2'-6"
	12"	6'-0"	3'-0"	1'-0"	2'-6"
	14"	7'-0"	3'-6"	1'-0"	3'-0"
	16"	8'-0"	4'-0"	1'-0"	3'-6"
1/4	4"	3'-0"	1'-6"	0'-6"	1'-0"
	6"	4'-6"	2'-0"	0'-6"	2'-0"
	8"	6'-0"	2'-6"	0'-6"	2'-6"
	10"	7'-0"	3'-6"	0'-10"	3'-0"
	12"	8'-0"	4'-0"	1'-0"	4'-0"
	14"	9'-0"	5'-0"	1'-0"	4'-0"
	16"	11'-6"	5'-0"	1'-0"	5'-6"

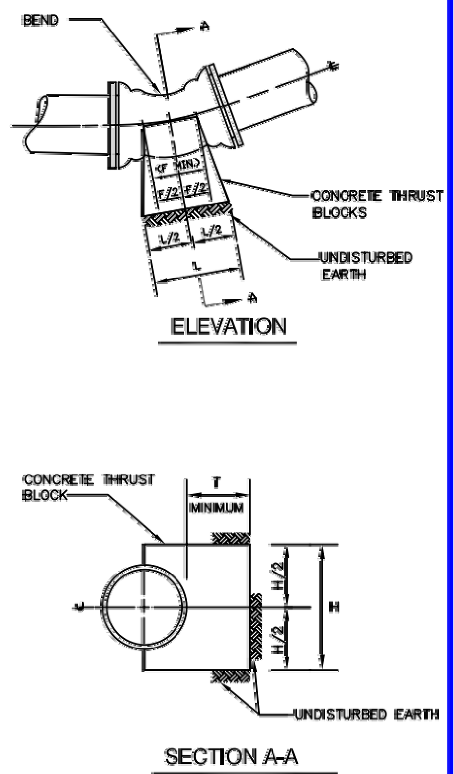

BLOCKING DESIGN REQUIREMENT NOTES

1. CONCRETE STRENGTH f'c=3000 psi AT 28 DAYS.
2. STANDARD THRUST BLOCKING IS BASED ON THE FOLLOWING ASSUMPTIONS AND LIMITATIONS, IF THESE CONDITIONS ARE NOT MET, SPECIAL DESIGN IS REQUIRED:
   a) TEST PRESSURE (WORKING + SURGE) IS 250 psi OR LOWER.
   b) DEPTH FROM FINISHED GRADE TO TOP OF PIPE ASSUMED TO EQUAL 4'-0" OR DEEPER.
   c) ELEVATION OF GROUNDWATER TABLE ASSUMED TO BE BELOW BOTTOM OF THE BLOCK.
3. IF SOIL CONDITIONS ARE SOFT OR ORGANIC SPECIAL DESIGN IS REQUIRED.
4. FOR LARGER PIPE DIAMETER, SEE DRAWINGS FOR SPECIAL DETAILS.
5. ALL DIMENSIONS ARE MINIMUMS EXCEPT WHERE LARGER DIMENSION WILL INTERFERE WITH THE PIPE JOINTS OR NOT FACILITATE BOLT REMOVAL ON MECHANICAL JOINT FITTINGS.

WASHINGTON SUBURBAN SANITARY COMMISSION | APPROVED: JULY 1, 2005 | Chief Engineer | STANDARD DETAIL | THRUST BLOCKS FOR HORIZONTAL BENDS | B 1.0

B10

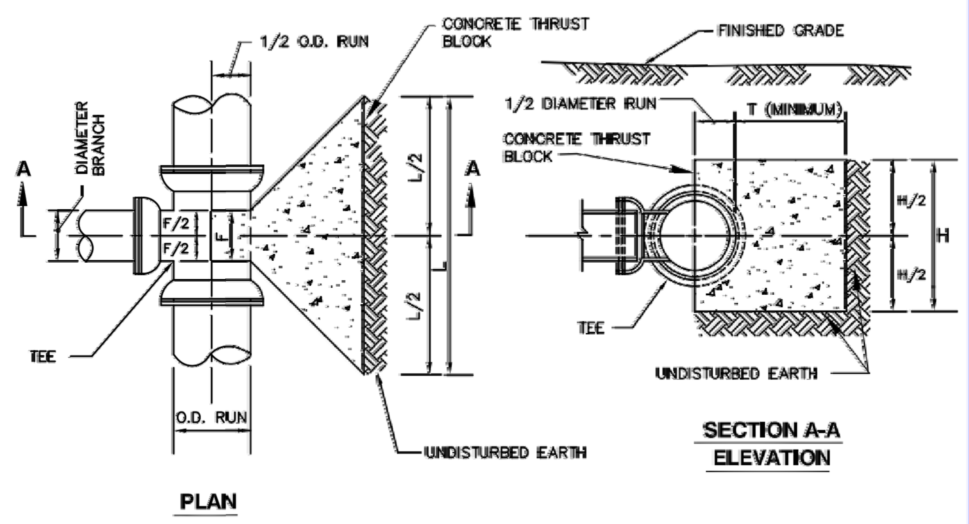

	NOMINAL DIAMETER OF BRANCH 4"	6"	8"	10"	12"	14"	16"
L	2'-0"	3'-0"	4'-0"	6'-0"	7'-0"	8'-0"	9'-0"
H	1'-6"	2'-0"	3'-0"	3'-0"	3'-6"	4'-0"	4'-6"
T	1'-0"	1'-0"	1'-6"	2'-6"	3'-0"	3'-6"	4'-0"
F	0'-6"	0'-6"	0'-9"	0'-9"	1'-0"	1'-0"	1'-0"

NOTE:

1. SEE BLOCKING DESIGN REQUIREMENT NOTES, DETAIL B/1.0.

WASHINGTON SUBURBAN SANITARY COMMISSION | APPROVED: JULY 1, 2005 | Chief Engineer | STANDARD DETAIL | THRUST BLOCKS FOR TEES AND TAPPING SLEEVES | B 1.3

B13

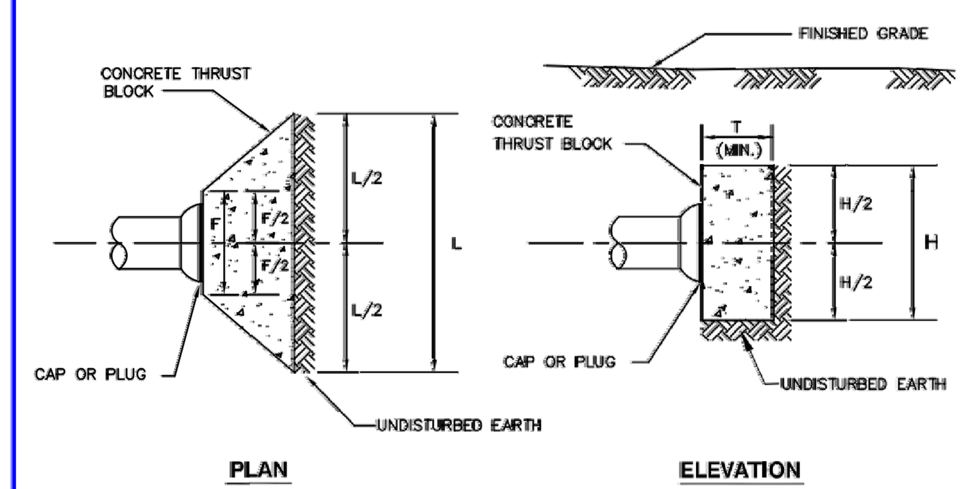

	NOMINAL DIAMETER OF PLUG OR CAP 4"	6"	8"	10"	12"	14"	16"
L	2'-0"	3'-0"	4'-0"	6'-0"	7'-0"	8'-0"	9'-0"
H	1'-6"	2'-0"	3'-0"	3'-0"	3'-6"	4'-0"	4'-6"
T	1'-0"	1'-0"	1'-6"	2'-6"	3'-0"	3'-6"	4'-0"
F	1'-0"	1'-0"	1'-0"	1'-0"	1'-6"	1'-6"	2'-0"

NOTE:

1. SEE BLOCKING DESIGN REQUIREMENT NOTES, DETAIL B/1.0.

WASHINGTON SUBURBAN SANITARY COMMISSION | APPROVED: JULY 1, 2005 | Chief Engineer | STANDARD DETAIL | THRUST BLOCKS FOR PLUGS AND CAPS | B 1.4

B14

VALVE SIZE	NUMBER OF 3/4"ø BARS REQUIRED	MAX. LENGTH OF SPIGOT PIPE
3"	2	24"
4"	2	24"
6"	2	27"
8"	2	27"
10"	4	27"
12"	6	27"
16"	8	36"
20"	12	36"
24"	16	36"
30"	20	42"

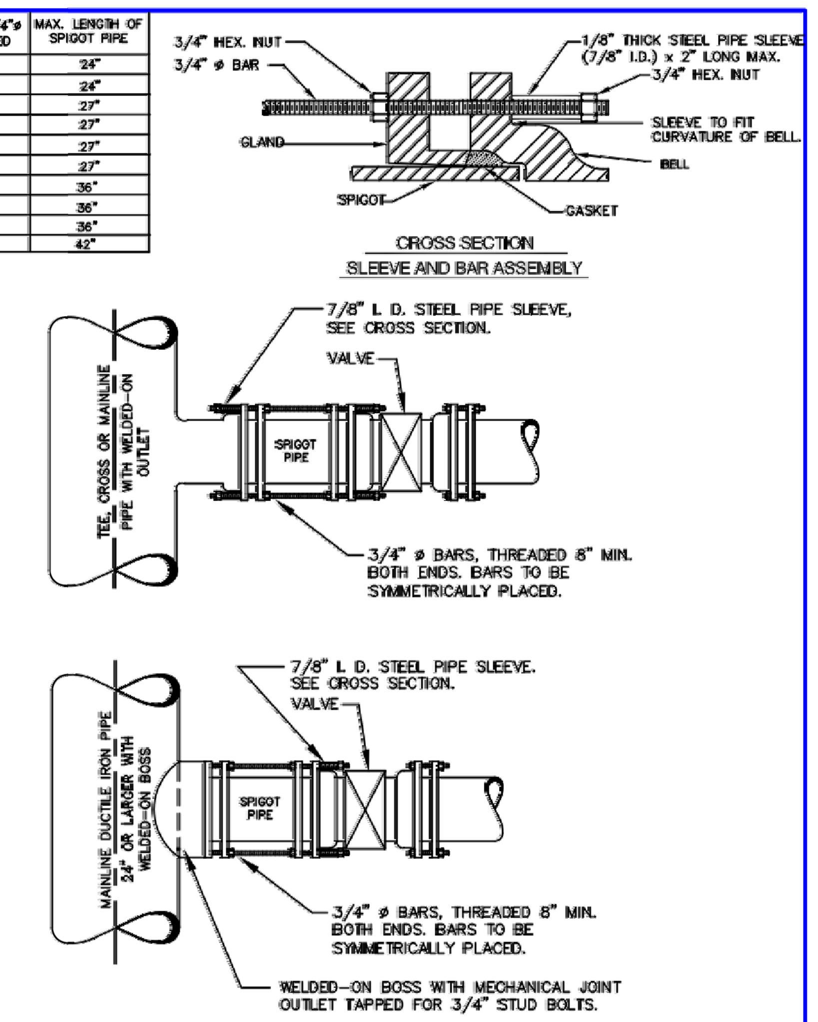

NOTES:

1. USE MECHANICAL JOINT FITTINGS ONLY.
2. COAT BARS AND APPURTENANCES WITH FIELD APPLIED COATING, SEE SPECIFICATIONS.
3. WHEN WELDED-ON BOSS OR WELDED-ON OUTLET IS USED ON 24" AND LARGER DUCTILE IRON PIPE, SEE DETAIL W/3.05.
4. FOR ALTERNATIVE METHOD OF STRAPPING VALVE TO MAIN, SEE DETAIL B/2.3.

WASHINGTON SUBURBAN SANITARY COMMISSION | APPROVED: JULY 1, 2005 | Chief Engineer | STANDARD DETAIL | METHOD OF STRAPPING VALVE TO MAIN | B 2.0

B20

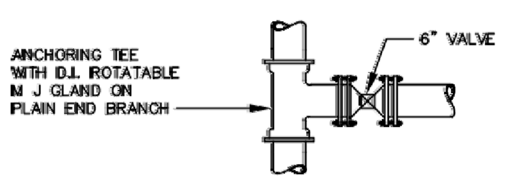

OPTION FOR USE OF ANCHORING COUPLING

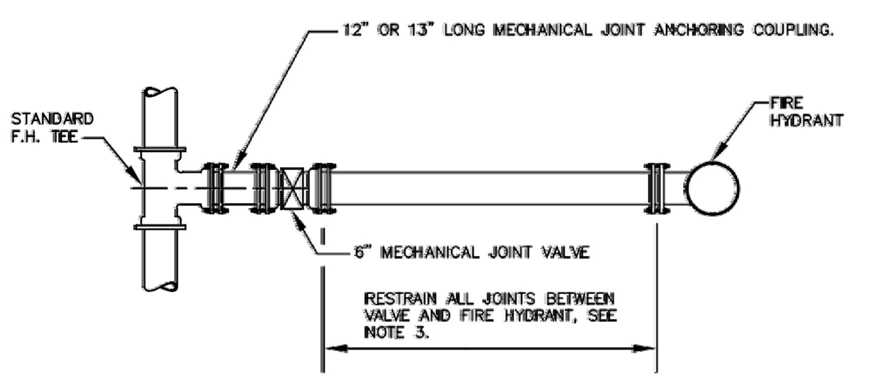

PLAN

NOTES:

1. DO NOT BLOCK FIRE HYDRANT TEE OR FIRE HYDRANT.
2. RESTRAIN ALL JOINTS BETWEEN FIRE HYDRANT TEE AND VALVE, USING ANCHORING TEE OR ANCHORING COUPLING.
3. RESTRAIN ALL JOINTS FROM VALVE TO FIRE HYDRANT, SEE DETAILS B/2.2, B/2.2a, B/2.7 OR RESTRAINED JOINT GASKETS, SEE SPECIFICATIONS.
4. PLACE RESTRAINED JOINT PIPE TAPE ON TOP OF PIPE FROM FIRE HYDRANT TEE TO FIRE HYDRANT FOR RESTRAINED JOINT GASKETS ONLY, SEE SPECIFICATIONS.

WASHINGTON SUBURBAN SANITARY COMMISSION | APPROVED: JULY 1, 2005 | Chief Engineer | STANDARD DETAIL | METHOD OF RESTRAINING FIRE HYDRANT TO MAIN | B 2.1

B21

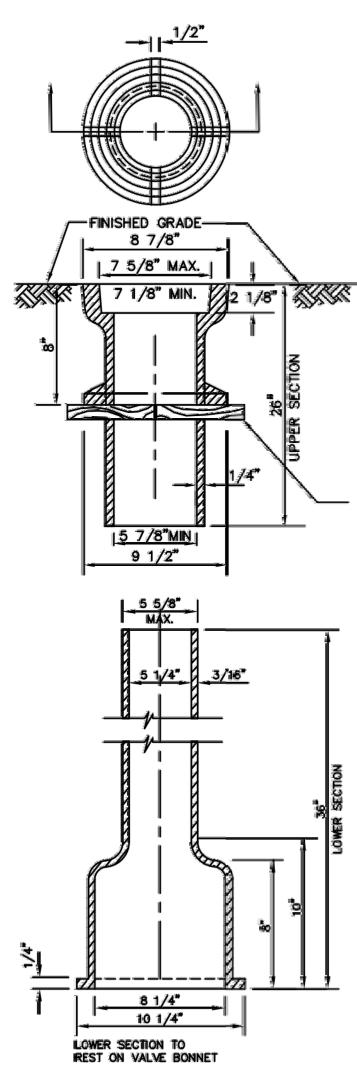

UPPER AND LOWER VALVE BOX SECTION

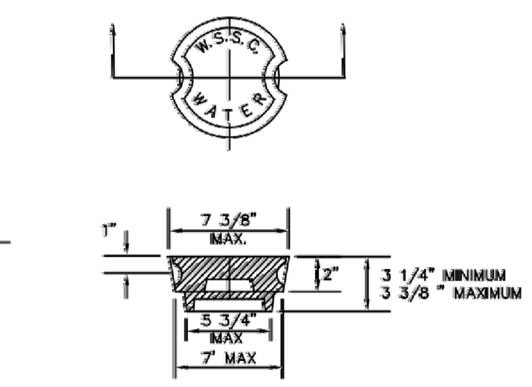

COVER

THE FLANGE SHALL BE LOCATED 8" BELOW TOP OF TOP SECTION & SHALL REST UPON NOTCHED BOARDS (SEE DETAIL BELOW)

NOTE:
ALL SECTIONS SHOWN TO BE GRAY.
IRON CASTINGS, CLASS NO. 25 ASTM A-48

WEIGHTS:
LID - 15 LBS.
TOP SECTION - 52 LBS.
BOTTOM SECTION - 48 LBS
TOTAL - 115
MINUS WEIGHT TOLERANCE 5%

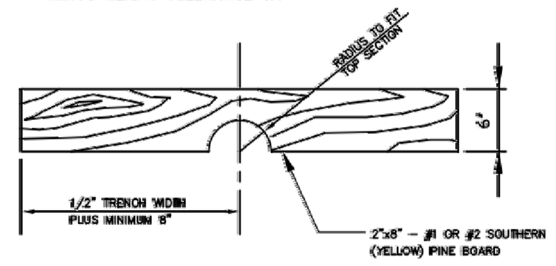

WASHINGTON SUBURBAN SANITARY COMMISSION | APPROVED: JUNE 17, 2004 | Chief Engineer | STANDARD DETAIL | ADJUSTABLE VALVE BOX ROUND HEAD SLIDING TYPE | W 2.1

W21.dwg

TYPE OF HYDRANT	H (IN.) MIN.	MAX.
U.S. PIPE AND FOUNDRY CO.	18	24
MUELLER COMPANY	18	24
KENNEDY VALVE	18 ~~17 1/4~~	23 1/4
AMERICAN FLOW CONTROL	18 ~~14~~	20

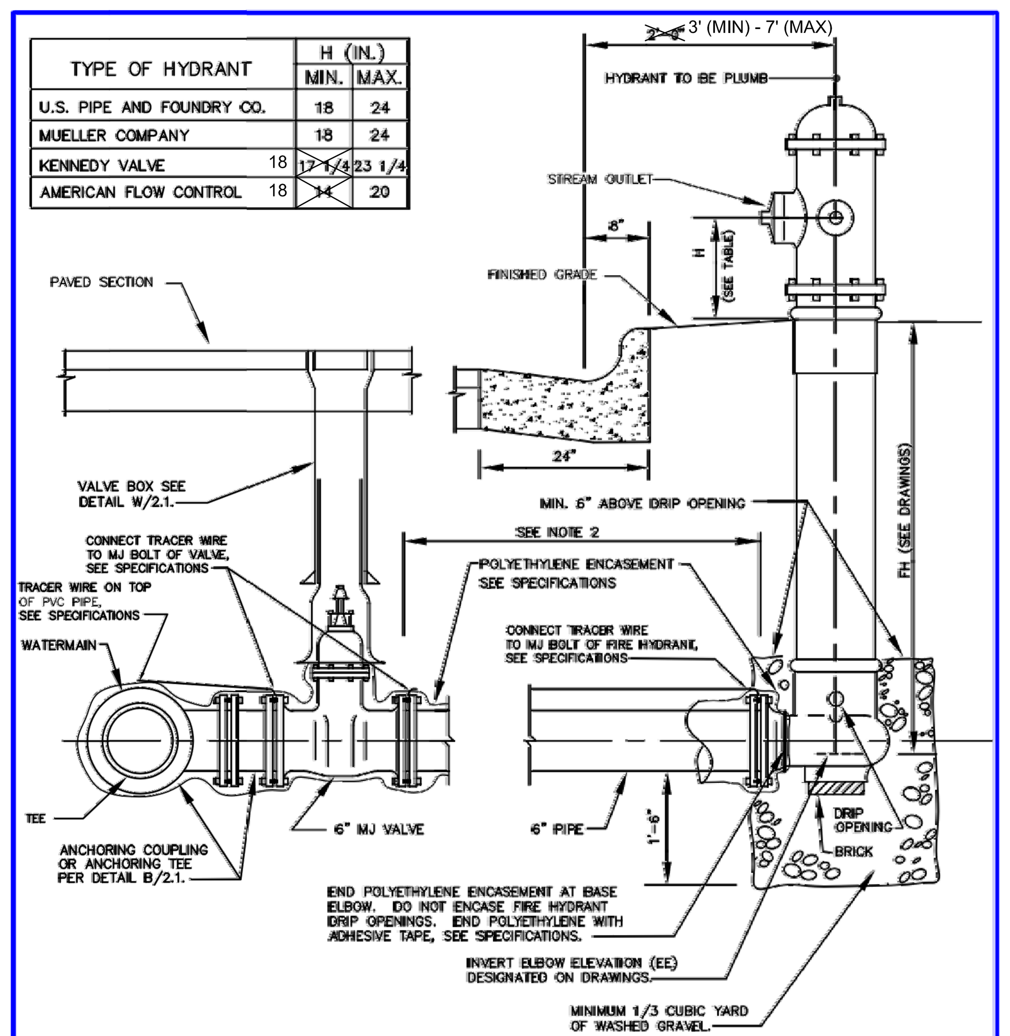

NOTES:

1. DO NOT BLOCK FIRE HYDRANT OR FIRE HYDRANT TEE.
2. FOR RESTRAINING VALVE TO FIRE HYDRANT, SEE DETAIL B/2.1.

WASHINGTON SUBURBAN SANITARY COMMISSION | APPROVED: JULY 1, 2005 | Chief Engineer | STANDARD DETAIL | FIRE HYDRANT SETTING CLOSED PAVING SECTION | W 8.0

W80

TYPE OF HYDRANT	H (IN.) MIN.	MAX.
U.S. PIPE AND FOUNDRY CO.	18	24
MUELLER COMPANY	18	24
KENNEDY VALVE	18 ~~17 1/4~~	23 1/4
AMERICAN FLOW CONTROL	18 ~~14~~	20

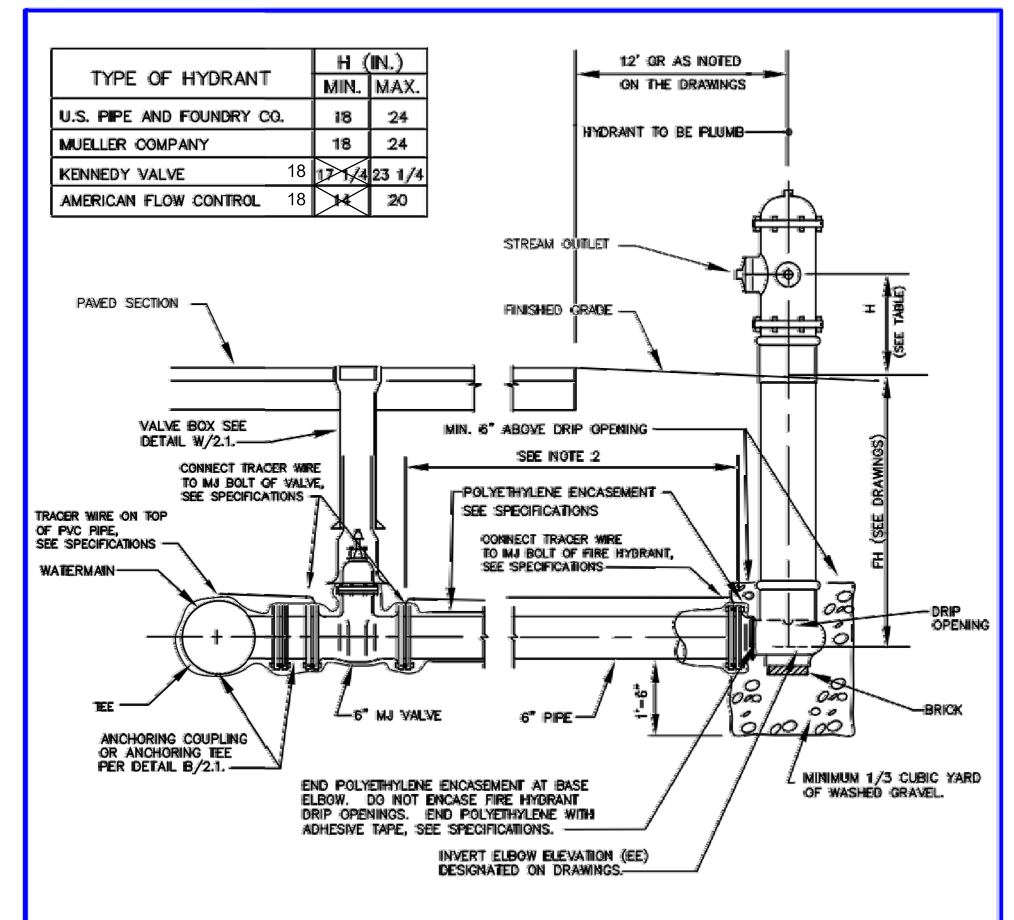

NOTES:

1. DO NOT BLOCK FIRE HYDRANT OR FIRE HYDRANT TEE.
2. FOR RESTRAINING VALVE TO FIRE HYDRANT, SEE DETAIL B/2.1.

WASHINGTON SUBURBAN SANITARY COMMISSION | APPROVED: JULY 1, 2005 | Chief Engineer | STANDARD DETAIL | FIRE HYDRANT SETTING OPEN PAVING SECTION | W 8.1

W81

100% SUBMITTAL

AECOM

AECOM TECHNICAL SERVICES, INC.
3101 WILSON BOULEVARD
SUITE 900
ARLINGTON, VA 22201

T: 703-682-4900 F: 703.682.4901
www.aecom.com

SEAL AREA

KEY PLAN

REV	DATE	DESCRIPTION	S&R BR.	CUSTOMER	PM	SECT. HEAD

	INITIALS	DATE
DRAWN BY	MLF	06/17/11
CHECKED BY	FM	
A-E MANAGER	EW	
ENVIRONMENTAL BRANCH	JH	
SAFETY BRANCH	CS	
CM	MMD	
PM	RWP	
CUSTOMER	JWB	
ENG. BRANCH	DGL	

UTILITY DETAILS

C-513

FLIGHT PROJECTS BUILDING

NATIONAL AERONAUTICS AND SPACE ADMINISTRATION

GODDARD SPACE FLIGHT CENTER GREENBELT, MARYLAND
FACILITIES MANAGEMENT DIVISION

DATE ISSUED	CoF CODE OR WR#	AECOM PROJECT NO.	SCALE
10/12/2012	12GXAZ	60187636	

FILE DATE: 10/10/2012 2:00:06 PM

File Location: M:\WATER\60190712 GODDARD SPACE FLIGHT CENTER\0001\CADD\DWG\90712C_513.DWG
Plotted By: FRAZIER, MICHELLE; Plot Date: Wednesday, October 10, 2012; Plot CTB File: ----; Page Setup Name: ----; InsUnits: 2; LTScale: 1.00 Measurement: 0;

NOTES: TYPICAL MANHOLE STEPS

A. MANHOLE STEPS SHALL BE MINIMUM 12" WIDE AND SPACED 12" WITH ± 1" TOLERANCE, CENTER TO CENTER, IN VERTICAL ALIGNMENT AND ALIGNED WITH BENCH.

B. EMBED STEPS MINIMUM 3" WITH A MINIMUM PROJECTION OF 5".

C. INSTALL BOTTOM STEP MINIMUM 5" AND MAXIMUM 16-1/2" ABOVE BENCH.

NOTES: MANHOLES

1. PROVIDE LIFTING HOLES OR DEVICES FOR ALL PRECAST SECTIONS. HOLES COMPLETELY THRU WALLS SHALL BE PLUGGED W/NEOPRENE OR RUBBER PLUG INSERTS, MORTARED FLUSH ON EACH SIDE OF WALL WITH NON-SHRINK GROUT. HOLES NOT COMPLETELY THRU WALL SHALL BE FILLED FLUSH WITH WALL WITH NON-SHRINK GROUT.
2. UNLESS OTHERWISE NOTED, MAXIMUM DEPTH OF MANHOLE SHALL BE 20'-0". PROVIDE 5'-0" MANHOLE WITH FALL PREVENTION SYSTEM FOR DEPTH OVER 20'.
3. PROVIDE FLEXIBLE GASKET CONNECTOR BETWEEN PIPE AND MANHOLE.
4. MINIMUM HEIGHT OF RISERS = 1'-0". NO MORE THAN ONE 1'-0" RISER IS PERMITTED ON EACH MANHOLE.
5. WHEN MANHOLE DEPTH IS 16'-0" AND GREATER, SEE DETAIL S/3.02 FOR PIPE TO MANHOLE CONNECTION.
6. WHEN PIPE GRADE IS 10% OR GREATER, SEE DETAIL S/3.03 FOR PIPE TO MANHOLE CONNECTION.
7. SEE DETAIL S/3.7 FOR 15" AND LARGER SEWER PIPE TO MANHOLE CONNECTION.
8. CHANNEL LINING MINIMUM 4" FOR BRICK CHANNELS AND MINIMUM 2" FOR PRECAST CONCRETE CHANNELS.
9. MINIMUM SPACING BETWEEN O.D. OF ADJACENT PIPE SHALL BE 9". SEE DETAILS S/6.4. WHEN PIPE DIAMETER OF SMALLER ADJACENT PIPE IS 12" OR GREATER CONTACT MANHOLE MANUFACTURER.

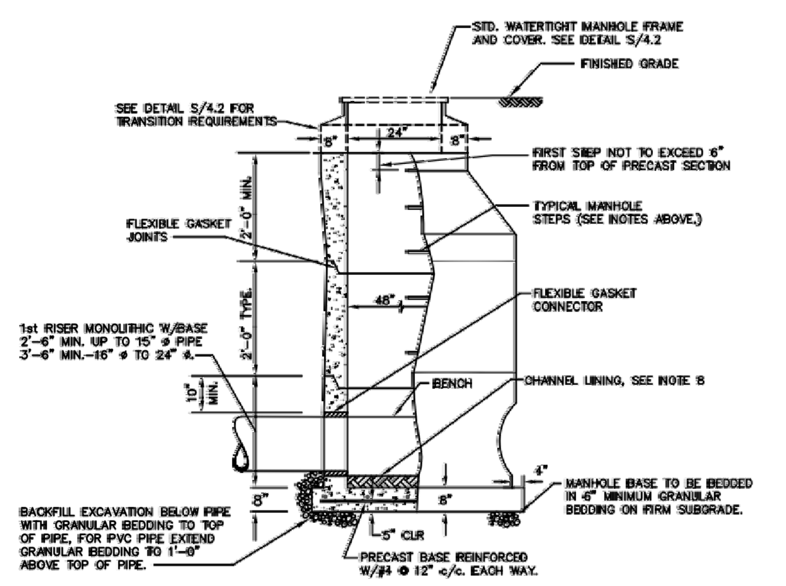

WASHINGTON SUBURBAN SANITARY COMMISSION	APPROVED: JULY 1, 2005 Chief Engineer	STANDARD DETAIL 48" DIAMETER PRECAST CONCRETE MANHOLE	S 1.0

S10

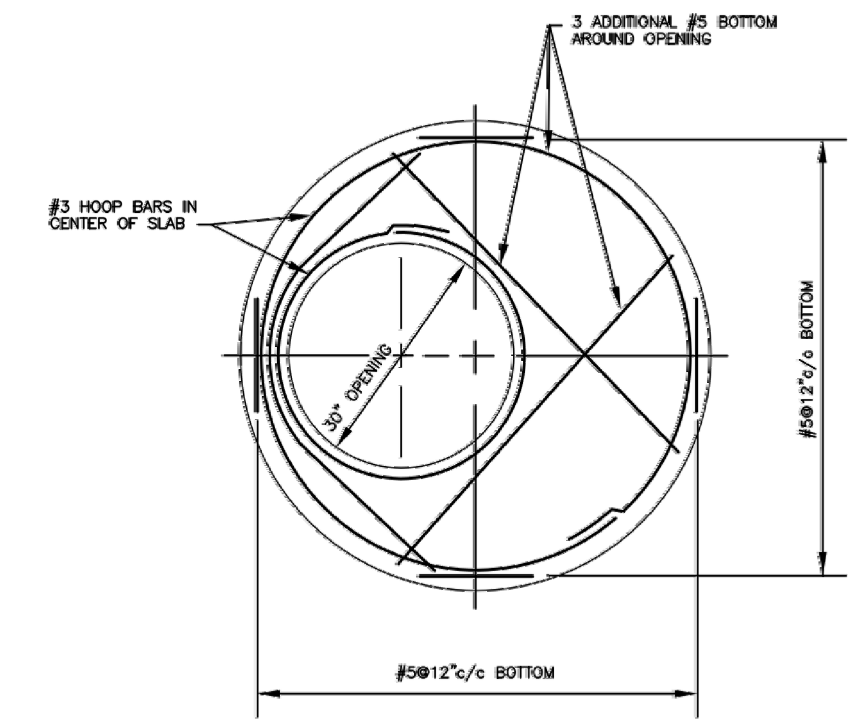

NOTES:

1. SLAB THICKNESS 8".
2. REINFORCING STEEL SHALL HAVE MINIMUM 1-1/2" COVER.

WASHINGTON SUBURBAN SANITARY COMMISSION	APPROVED: JULY 1, 2005 Chief Engineer	STANDARD DETAIL PRECAST TOP SLAB FOR 48" AND 60" DIAMETER PRECAST CONCRETE MANHOLES	S 1.3

S13

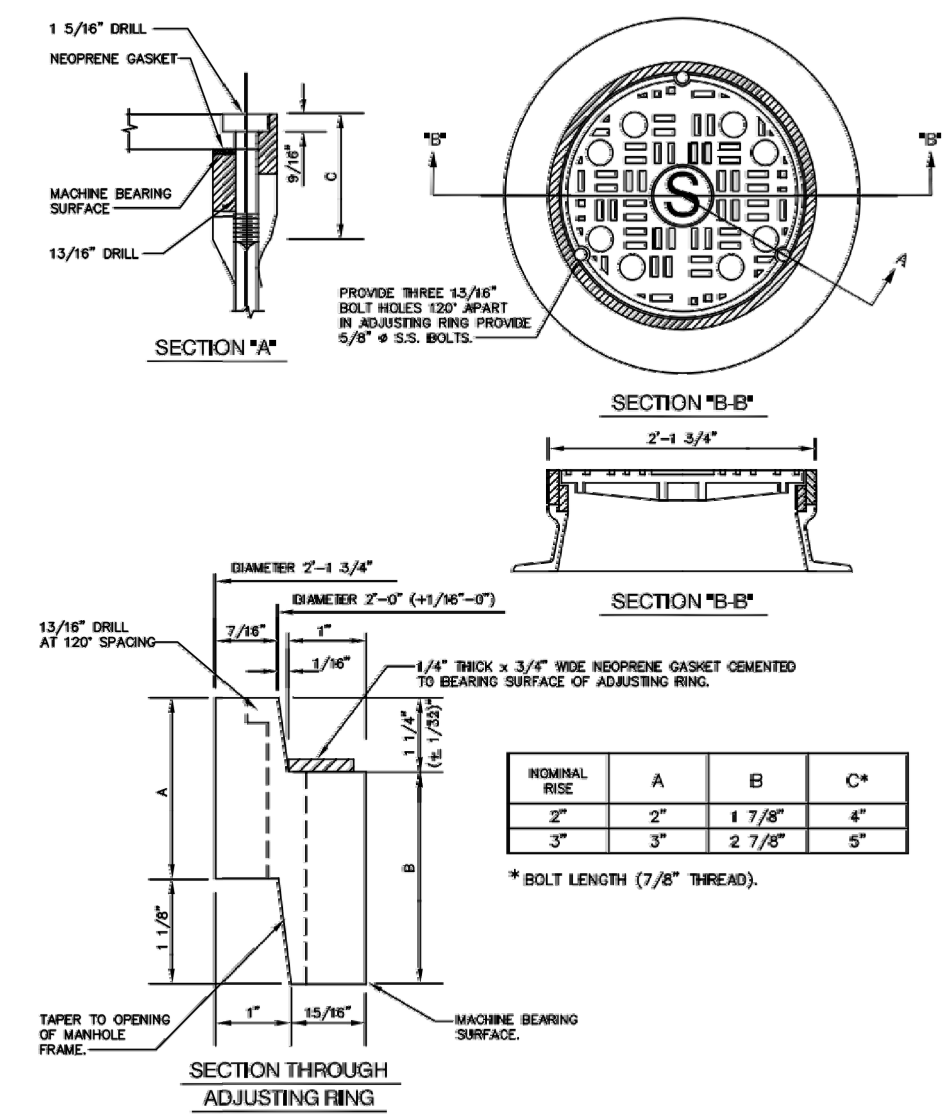

NOMINAL RISE	A	B	C*
2"	2"	1 7/8"	4"
3"	3"	2 7/8"	5"

* BOLT LENGTH (7/8" THREAD).

WASHINGTON SUBURBAN SANITARY COMMISSION	APPROVED: JULY 1, 2005 Chief Engineer	STANDARD DETAIL ADJUSTING RINGS FOR 22" OPENING WATERTIGHT MANHOLE FRAME & COVER	S 4.0

S40

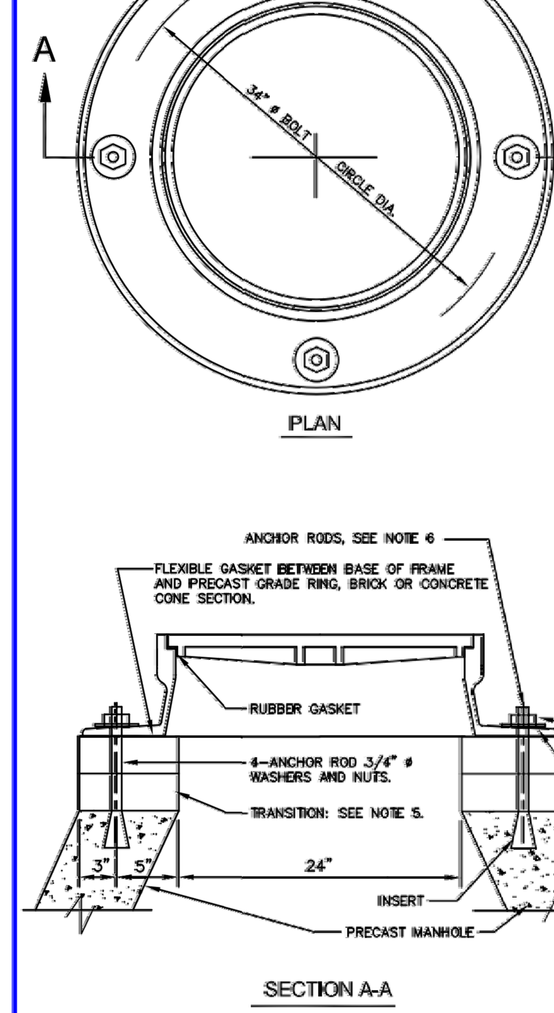

MANHOLE FRAME AND COVER NOTES:

1. ADJUST MANHOLE FRAME AND COVER TO PROPER GRADE, CROSS-SLOPE, AND ELEVATION IN SPACE DEDICATED TO PUBLIC USE, TRAVELED WAY, OR WHEN DESIGNATED TO MEET EXISTING GRADE. OTHERWISE PRECAST MANHOLE TO BE BUILT WITHOUT TRANSITION.
2. TO BRING AN INTERIM SETTING TO FINAL GRADE, REMOVE EXISTING ANCHOR RODS, WASHERS, NUTS, FRAME AND COVER, AND FLEXIBLE GASKET. INSTALL NEW ANCHOR RODS, BRICK/GRADE RINGS AND REINSTALL EXISTING FRAME/COVER, AND NEW WASHERS/NUTS. USE NEW FLEXIBLE GASKET.
3. PARGING:
   A. MANHOLE BUILT WITHOUT TRANSITION: NO PARGING NECESSARY.
   B. MANHOLE BUILT WITH BRICK TRANSITION: PARGE TOP OF BRICK WORK AND EXTERIOR OF BRICK WORK. EXTEND PARGING 6" BELOW TOP OF CONE SECTION.
   C. MANHOLE BUILT WITH GRADE RING TRANSITION: NO PARGING NECESSARY
4. WATER PROOFING:
   A. MANHOLE BUILT WITH BRICK TRANSITION: AFTER SETTING MANHOLE FRAME AND COVER, APPLY TWO COATS OF ASPHALT BASED WATER PROOFING. ASPHALT BASED WATER PROOFING SHALL EXTEND 2" MINIMUM BEYOND PARGING ON CONE. AT FRAME, EXTEND WATER PROOFING TO COVER MANHOLE FRAME FLANGE.
   B. MANHOLE BUILT WITH GRADE RING TRANSITION OR WITHOUT TRANSITION: NO WATERPROOFING NECESSARY.
5. TRANSITION: WHEN MANHOLE IS IN SPACE DEDICATED TO PUBLIC USE OR TRAVELED WAY OR WHEN DESIGNATED TO MEETING GRADE, PROVIDE BRICK OR CONCRETE GRADE RINGS. OTHERWISE PRECAST MANHOLE TO BE WITHOUT TRANSITION.
   A. BRICK: TWO COURSES MINIMUM (4") AND 6 COURSES MAXIMUM (18").
   B. GRADE RING: MINIMUM (4") AND MAXIMUM (18").
6. FIELD CUT ENDS OF ANCHOR RODS TO MAXIMUM 1" ABOVE TOP OF NUT. ROUGH EDGES SHALL BE GROUND SMOOTH.

WASHINGTON SUBURBAN SANITARY COMMISSION	APPROVED: JULY 1, 2005 Chief Engineer	STANDARD DETAIL FINAL SETTING ANCHORING 24" WATERTIGHT FRAME AND COVER TO MANHOLE WALL	S 4.2

S42

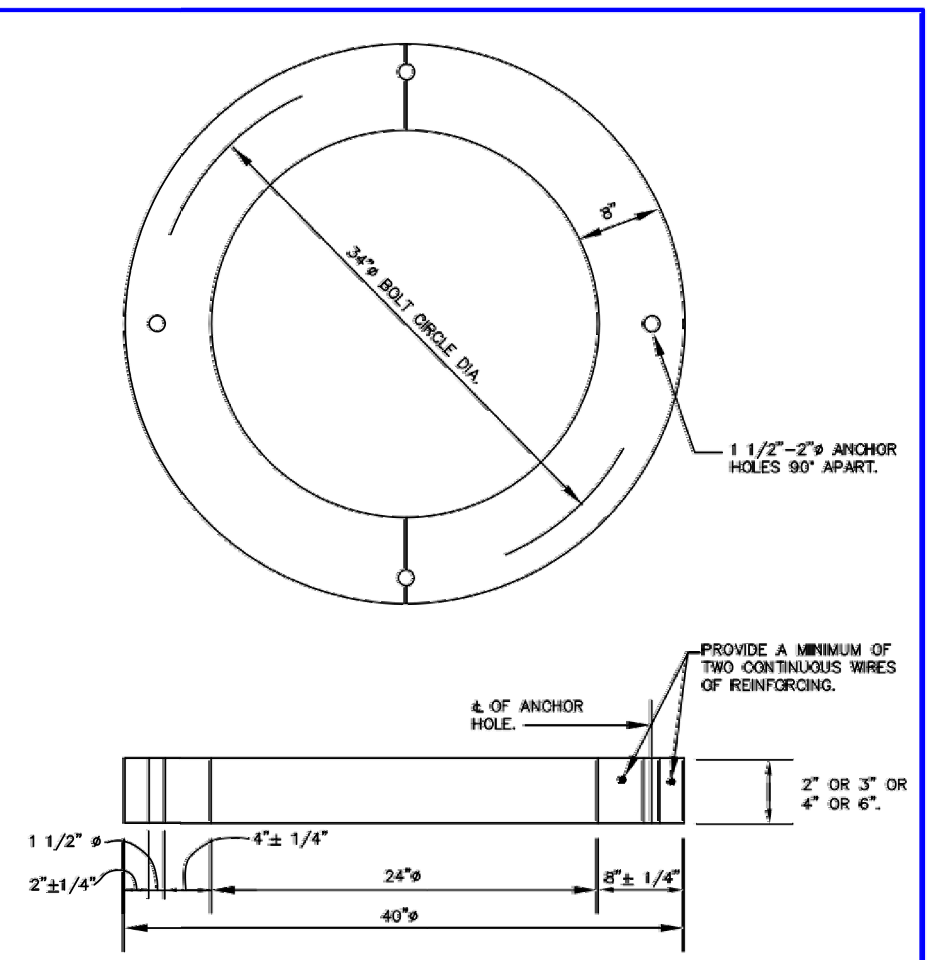

NOTES:

1. PRECAST CONCRETE f'c=5000 PSI @ 28 DAYS.
2. REINFORCEMENT SHALL CONFORM TO ASTM C-478.
3. CAST LIFT LUGS ARE REQUIRED FOR 4" AND 6" RINGS.

WASHINGTON SUBURBAN SANITARY COMMISSION	APPROVED: JULY 1, 2005 Chief Engineer	STANDARD DETAIL 24" PRECAST CONCRETE MANHOLE ADJUSTING GRADE RING	S 4.21

S421

PIPE SIZE D	W
3	12
4	12
6	11
8	10
10	9
12	8
14	8
16	8
18	8
20	8
24	12
30	12
36	15
42	15
48	18

ALL DIMENSIONS IN INCHES

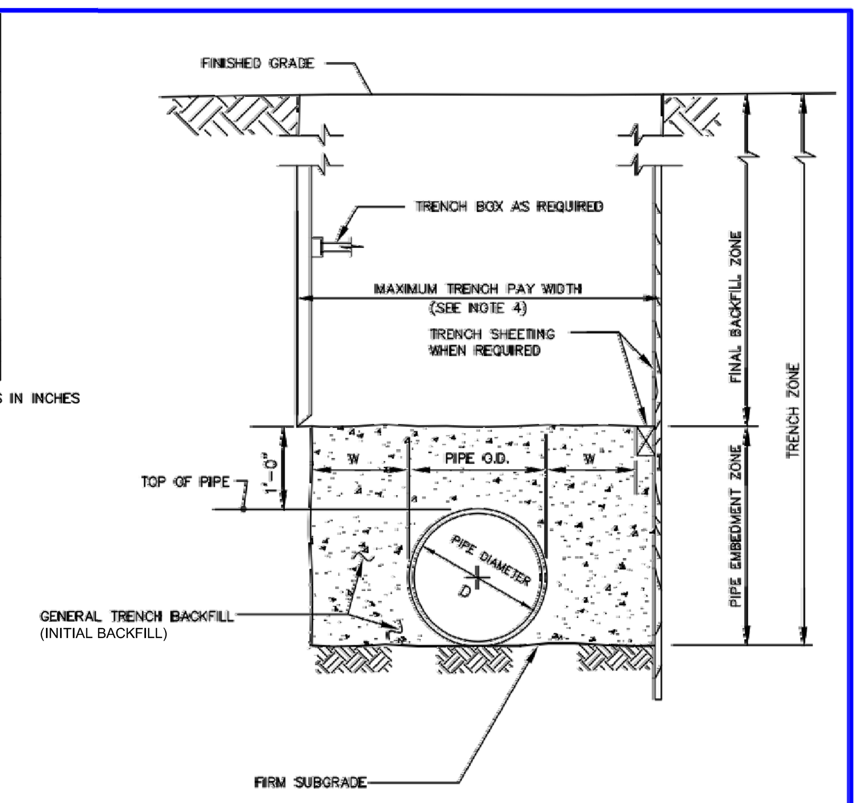

NOTES:

1. FOR MAXIMUM ALLOWABLE COVER, SEE DETAILS W/6.0, AND W/6.1.
2. THE "W" DIMENSION SHALL BE USED TO CALCULATE MAXIMUM TRENCH PAY WIDTH.
3. THE "W" DIMENSION SHALL NOT BE LESS THAN 8" FOR ALL PIPE INSTALLATION.
4. THE MAXIMUM TRENCH PAY WIDTH EQUALS 2W + PIPE O.D. – OTHERWISE, THE MAXIMUM TRENCH PAY WIDTH IN AREAS OF REQUIRED TRENCH BOX/SHEETING EQUALS 2W + PIPE O.D. + 24", EXCEPT FOR AREAS BELOW THE TRENCH BOX WHERE THE TRENCH WIDTH EQUALS 2W + PIPE O.D.

WASHINGTON SUBURBAN SANITARY COMMISSION	APPROVED: JULY 1, 2005 Chief Engineer	STANDARD DETAIL TRENCH DETAIL - FLEXIBLE PIPE (DUCTILE IRON 24" AND SMALLER AND PVC AWWA C-900/905)	M 8.1a

M81a

PIPE SIZE D	W
4	12
6	11
8	10
10	9
12	8
15	8
18	8
21	8
24	12
27	12
30	12
36	15
42	15
48	18

ALL DIMENSIONS IN INCHES

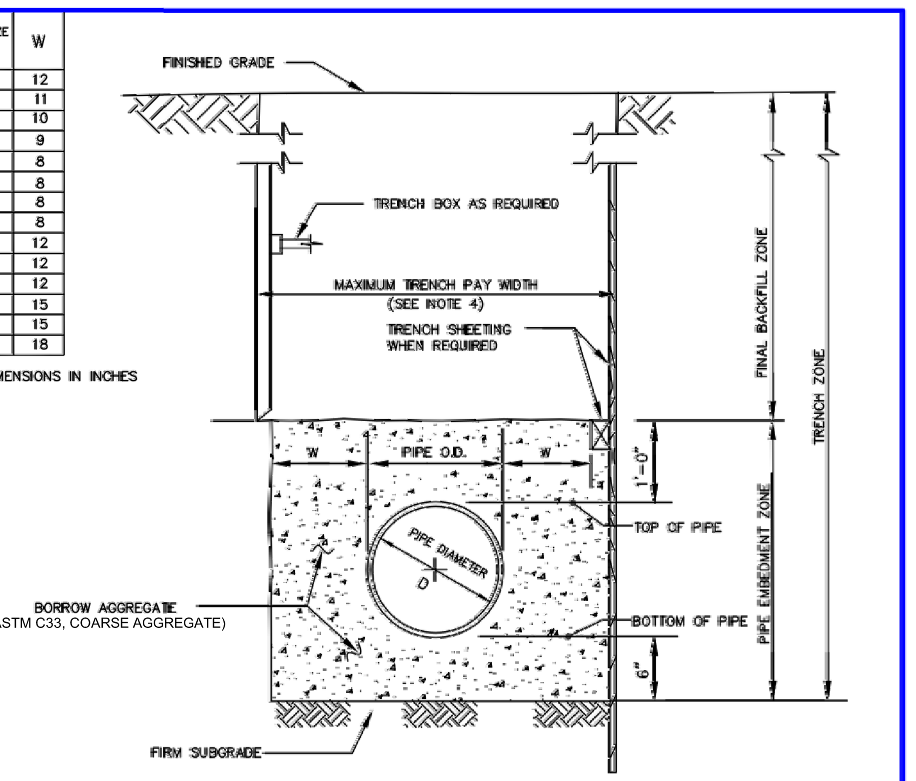

NOTES:

1. FOR MAXIMUM ALLOWABLE COVER, SEE DETAIL S/8.1.
2. THE "W" DIMENSION SHALL BE USED TO CALCULATE MAXIMUM TRENCH PAY WIDTH.
3. THE "W" DIMENSION SHALL NOT BE LESS THAN 8" FOR ALL PIPE INSTALLATION.
4. THE MAXIMUM TRENCH PAY WIDTH EQUALS 2W + PIPE O.D. – OTHERWISE, THE MAXIMUM TRENCH PAY WIDTH IN AREAS OF REQUIRED TRENCH BOX/SHEETING EQUALS 2W + PIPE O.D. + 24", EXCEPT FOR AREAS BELOW THE TRENCH BOX WHERE THE TRENCH WIDTH EQUALS 2W + PIPE O.D.

WASHINGTON SUBURBAN SANITARY COMMISSION	APPROVED: JULY 1, 2005 Chief Engineer	STANDARD DETAIL TRENCH DETAIL - FLEXIBLE PIPE GRAVITY PVC SEWER	M 8.1c

M81c

100% SUBMITTAL

AECOM

AECOM TECHNICAL SERVICES, INC.
3101 WILSON BOULEVARD
SUITE 900
ARLINGTON, VA 22201

T: 703-682-4900 F: 703.682.4901
www.aecom.com

SEAL AREA

STATE OF MARYLAND ERIC P. BUCK REGISTERED PROFESSIONAL ENGINEER 10/12/2012

KEY PLAN

REV	DATE	DESCRIPTION	S&R BR.	CUSTOMER	PM	SECT. HEAD

	INITIALS	DATE
DRAWN BY	MLF	06/17/11
CHECKED BY	FM	
A-E MANAGER	EW	
ENVIRONMENTAL BRANCH	JH	
SAFETY BRANCH	CS	
CM	MMD	
PM	RWP	
CUSTOMER	JWB	
ENG. BRANCH	DGL	

UTILITY DETAILS

C-514

FLIGHT PROJECTS BUILDING

NATIONAL AERONAUTICS AND SPACE ADMINISTRATION

GODDARD SPACE FLIGHT CENTER GREENBELT, MARYLAND
FACILITIES MANAGEMENT DIVISION

DATE ISSUED	CoF CODE OR WR#	AECOM PROJECT NO.	SCALE
10/12/2012	12GXAZ	60187636	

FILE DATE: 10/10/2012 2:00:20 PM

File Location: M:\WATER\60190712 GODDARD SPACE FLIGHT CENTER\0001\CADD\DWG\90712C_514.DWG
Plotted By: FRAZIER, MICHELLE; Plot Date: Wednesday, October 10, 2012; Plot CTB File: ----; Page Setup Name: ----; InsUnits: 2; LTScale: 1.00 Measurement: 0;

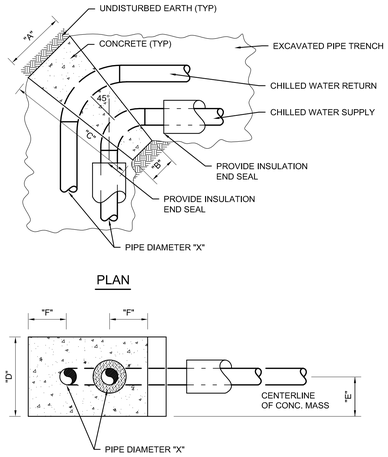

90° ELBOW PIPE INSTALLATION DETAIL

NO SCALE

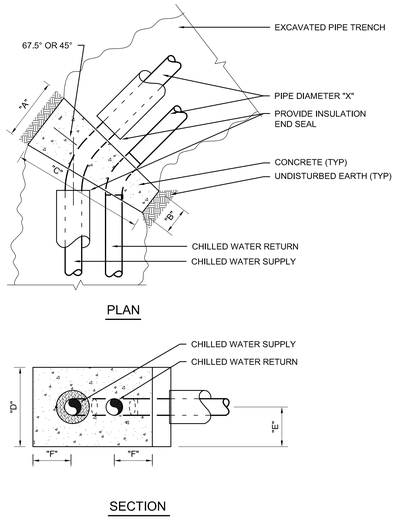

45° ELBOW PIPE INSTALLATION DETAIL

NO SCALE

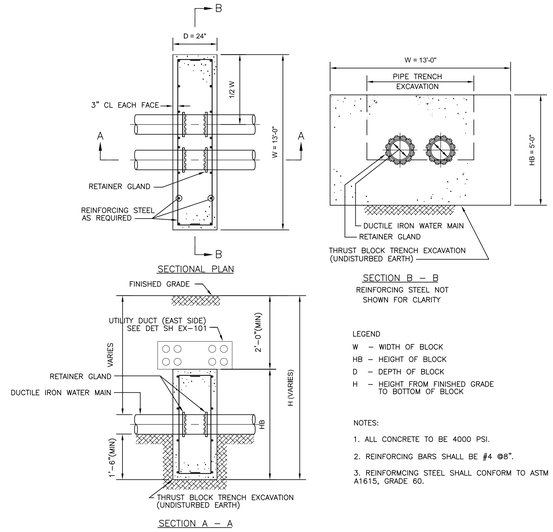

LEGEND

W – WIDTH OF BLOCK

HB – HEIGHT OF BLOCK

D – DEPTH OF BLOCK

H – HEIGHT FROM FINISHED GRADE TO BOTTOM OF BLOCK

NOTES:

1. ALL CONCRETE TO BE 4000 PSI.
2. REINFORCING BARS SHALL BE #4 @8".
3. REINFORMCING STEEL SHALL CONFORM TO ASTM A1615, GRADE 60.

IN-LINE THRUST RESTRAINT FOR CHILLED WATER LINES

NO SCALE

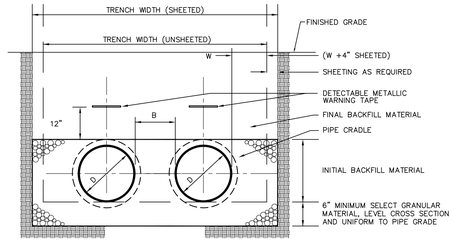

PIPE DIAMETER D	BETWEEN PIPE CLEAR B	EACH SIDE CLEAR W	TRENCH WIDTH UNSHEETED	TRENCH WIDTH SHEETED
4 & SMALLER	11	8	36	42
6	11	8	40	46
8	12	8	44	50
10	12	10	48	58
12	12	12	52	62
14	12	12	56	66
16	12	12	60	70
18	12	12	64	74
20	12	12	66	74

CHILLED WATER TRENCH AND BEDDING DETAIL

NO SCALE

90 DEGREE BEND						
	THRUST BLOCK DIMENSIONS - IN INCHES - MIN.					
PIPE DIA. (INCHES)	A	B	C	D	E	F
8	12	12	48	24	12	14
20	12	12	72	48	24	20

45 DEGREE BEND						
	THRUST BLOCK DIMENSIONS - IN INCHES					
PIPE DIA. (INCHES)	A	B	C	D	E	F
8	24	12	48	32	16	14
20	24	12	78	40	20	20

NOTE

THRUST BLOCK & ANCHORS SHALL BE POURED TO THE SHOWN DESIGN DIMENSIONS (NOT LARGER) UNLESS APPROVED OTHERWISE BY THE COTR.

THRUST BLOCK DIMENSIONS FOR 90° AND 45° FITTINGS ON STEAM LINES

NO SCALE

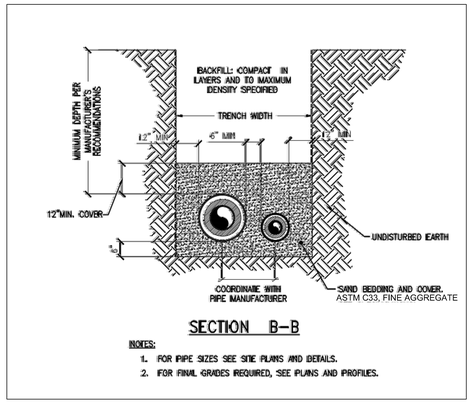

SECTION B–B

NOTES:

1. FOR PIPE SIZES SEE SITE PLANS AND DETAILS.
2. FOR FINAL GRADES REQUIRED, SEE PLANS AND PROFILES.

STEAM TRENCH DETAIL

NO SCALE

100% SUBMITTAL

AECOM

AECOM TECHNICAL SERVICES, INC.
3101 WILSON BOULEVARD
SUITE 900
ARLINGTON, VA 22201

T: 703-682-4900 F: 703.682.4901
www.aecom.com

SEAL AREA

STATE OF MARYLAND ERIC F. EUDY 26212 PROFESSIONAL ENGINEER
10/12/2012

KEY PLAN

REV	DATE	DESCRIPTION	S&R BR.	CUSTOMER	PM	SECT. HEAD

	INITIALS	DATE
DRAWN BY	MLF	06/17/11
CHECKED BY	FM	
A-E MANAGER	EW	
ENVIRONMENTAL BRANCH	JH	
SAFETY BRANCH	CS	
CM	MMD	
PM	RWP	
CUSTOMER	JWB	
ENG. BRANCH	DGL	

UTILITY DETAILS

C-515

FLIGHT PROJECTS BUILDING

NATIONAL AERONAUTICS AND SPACE ADMINISTRATION

GODDARD SPACE FLIGHT CENTER GREENBELT, MARYLAND
FACILITIES MANAGEMENT DIVISION

DATE ISSUED	CoF CODE OR WR#	AECOM PROJECT NO.	SCALE
10/12/2012	12GXAZ	60187636	

File Location: M:\WATER\60190712 GODDARD SPACE FLIGHT CENTER\0001\CADD\DWG\90712C_215.DWG
Plotted By: FRAZIER, MICHELLE; Plot Date: Wednesday, October 10, 2012; Plot CTB File: ----; Page Setup Name: ----; Inskinks: 2; LTScale: 1.00 Measurement: 0;
FILE DATE: 10/10/2012 2:00:34 PM

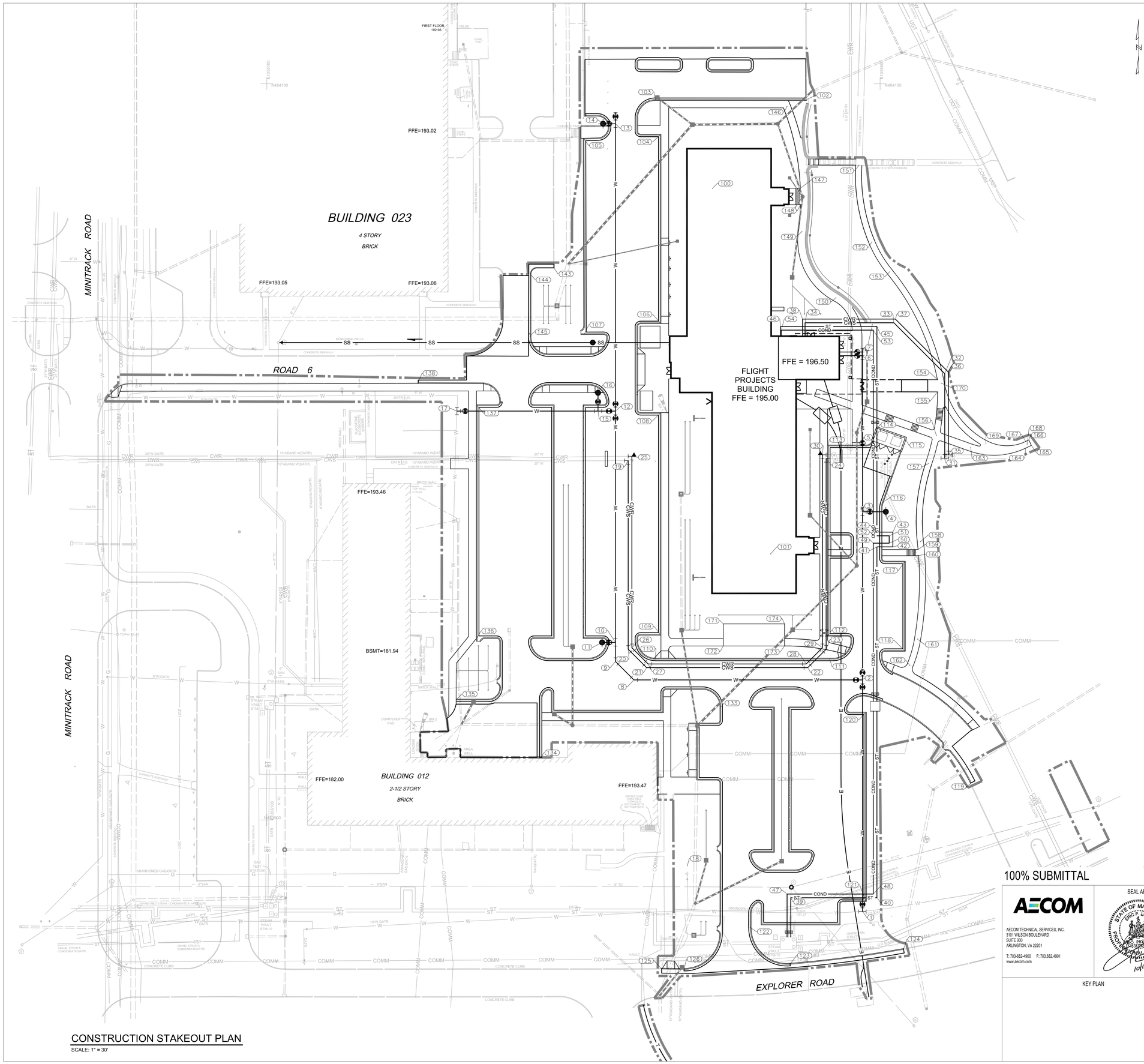

NOTES THIS SHEET:

1. SEE SHEET C001 FOR GENERAL CIVIL NOTES, LEGENDS & SURVEY CONTROL INFORMATION.
2. SEE SHEET C601 FOR SITE, CURVE, AND UTILITY STAKEOUT DATA.

CONSTRUCTION STAKEOUT PLAN

SCALE: 1" = 30'

100% SUBMITTAL

1"=30' 30' 15' 0 30' 60'

AECOM

AECOM TECHNICAL SERVICES, INC.
3101 WILSON BOULEVARD
SUITE 900
ARLINGTON, VA 22201

T: 703-682-4900 F: 703.682.4901
www.aecom.com

SEAL AREA

STATE OF MARYLAND
ERIC P. BUCHAN
No. 29236
PROFESSIONAL ENGINEER
10/12/2012

KEY PLAN

REV	DATE	DESCRIPTION	S&R BR.	CUSTOMER	PM	SECT. HEAD

	INITIALS	DATE
DRAWN BY	MLF	06/16/11
CHECKED BY	FM	
A-E MANAGER	RGW	
ENVIRONMENTAL BRANCH	EEW JH	
SAFETY BRANCH	CS	
CM	MMD	
PM	RWP	
CUSTOMER	JWB	
ENG. BRANCH	DGL	

CONSTRUCTION STAKEOUT PLAN

C-600

FLIGHT PROJECTS BUILDING

NATIONAL AERONAUTICS AND SPACE ADMINISTRATION

GODDARD SPACE FLIGHT CENTER GREENBELT, MARYLAND
FACILITIES MANAGEMENT DIVISION

DATE ISSUED	CoF CODE OR WR#	AECOM PROJECT NO.	SCALE
10/12/2012	12GXAZ	60187636	

File Location: M:\WATER\60190712 GODDARD SPACE FLIGHT CENTER\0001\CADD\DWG\60712C_600.DWG
Plotted By: FRAZIER, MICHELLE; Plot Date: Wednesday, October 10, 2012; Plot CTB File: ----; Page Setup Name: ----; InsUnits: 2; LTScale: 1.00 Measurements: 0;

FILE DATE: 10/10/2012 2:01:06 PM

STORM DRAIN STRUCTURE SCHEDULE

STRUCT NO.	TYPE	COORDINATE NORTH	COORDINATE EAST	REMARKS
D10	S' INLET	484066.69	1355446.86	
D10A	WQS	484088.60	1355418.37	SEE DET SH C506
D10B	YARD INLET	483971.68	1355434.80	
D11	MH	484067.41	1355516.62	
D20	MH	484007.69	1355536.75	
D20A	YARD INLET	484020.02	1355526.32	RIM = 194.3, INV = 193.00
D20B	YARD INLET	483992.59	1355526.32	RIM = 194.3, INV = 193.00
D21	S' INLET	483942.19	1355528.37	
D30	COMB. INLET	483596.14	1355268.44	
D35	S' INLET	483655.00	1355437.97	
D40	MH	483577.11	1355349.23	
D41	S' INLET	483641.35	1355349.14	
D42	WQS	483586.50	1355334.27	SEE DET SH C506
D50	S' INLET	483655.01	1355528.75	
D51	MH	483707.19	1355581.00	
D51A	S' INLET	483748.27	1355542.91	
D51B	YARD INLET	483818.27	1355542.91	
D52	MH	483815.69	1355581.00	
D53	S' INLET	483840.95	1355589.32	
D54	S' INLET	483883.92	1355589.43	
D60	S' INLET	483466.46	1355519.81	
D70	S' INLET	483467.05	1355458.17	
D80	COMB. INLET	483380.00	1355438.71	

EXISTING STRUCTURE ADJUSTMENT SCHEDULE

STRUCT NO.	TYPE	EXISTING ELEVATION	PROPOSED ELEVATION	REMARKS
EXST 11	SD INLET	192.17	191.80	
EXST 24	SD INLET	187.80	188.50	
EXST 27	SD MH	192.41	192.10	
EXST 32	SD INLET	189.10		REMOVE CURB BOX
EXST 36	SD INLET	192.52	192.80	
EXST 4	SS MH	191.22	191.35	

SANITARY SEWER STRUCTURE SCHEDULE

STRUCT. NO.	TYPE	COORDINATE NORTH	COORDINATE EAST	REMARKS
EX S1	MH			CORE AND CONNECT TO EXST.
S2	4' MH	483889.11	1355390.75	

STEAM LINE STRUCTURE SCHEDULE

STRUCT. NO.	TYPE	COORDINATE NORTH	COORDINATE EAST	REMARKS
EX 12	MH			CONNECT TO EXST.
ST-1	MH	483592.65	1355595.93	PRECAST STRUCTURE, SEE DETAIL ON MECH DWGS

WATERLINE STAKE OUT SCHEDULE

POINT NO.	NORTHING	EASTING	STATION	REMARKS
1	483425.67	1355585.64		CONN TO EXST, 10"X8" TSV
2	483614.13	1355585.64		8"X8" TEE, 3-8" GV
3	483751.20	1355585.64		8"X6"TEE, 6" GV
4	483751.20	1355604.69		FH4
5	483807.12	1355585.64		PIV
6	483878.39	1355585.64		8"X6"TEE, 6" GV
7	483881.39	1355585.64		8"X4" TEE, 4" GV, 8" RESTR. CAP
8	483614.13	1355399.29		45° BEND
9	483629.13	1355384.29		45° BEND
10	483644.68	1355384.29		8"X6" TEE, 6" GV
11	483644.68	1355373.37		FH3
12	483833.21	1355384.29		8"X8" TEE, 3-8" GV
13	484067.40	1355384.29		8"X6" TEE, 6" GV, CAP
14	484067.40	1355374.12		FH2
15	483833.21	1355370.05		8"X6"TEE, 6" GV
16	483848.11	1355370.05		FH1
17	483833.21	1355255.00		CONN TO EXST, 8"X8" TSV, 8" GV
18	483462.69	1355442.83		FH5

CHILLED WATER STAKE OUT SCHEDULE

POINT NO.	NORTHING	EASTING	STATION	REMARKS
19	483792.92	1355394.64		90° HB
20	483639.13	1355394.64		45° HB
21	483624.13	1355409.64		45° HB
22	483624.13	1355541.02		45° HB
23	483639.13	1355556.02		45° HB
24	483794.64	1355556.02		90° HB
25	483796.36	1355397.64		90° HB
26	483640.37	1355397.64		45° HB
27	483627.13	1355410.88		45° HB
28	483627.13	1355539.77		45° HB
29	483640.37	1355553.02		45° HB
30	483797.61	1355553.02		90° HB
31	483794.78	1355652.71		90° HB
32	483863.71	1355652.71		45° HB
33	483905.22	1355611.20		45° HB
34	483905.22	1355538.82		90° HB
35	483797.65	1355655.71		90° HB
36	483864.95	1355655.71		45° HB
37	483908.22	1355612.44		45° HB
38	483908.22	1355536.82		90° HB

STEAM & CONDENSATE STAKE OUT SCHEDULE

POINT NO.	NORTHING	EASTING	STATION	REMARKS
39	483436.61	1355527.18		90° HB
40	483436.61	1355597.43		90° HB
41	483722.57	1355597.43		90° HB
42	483722.57	1355610.43		90° HB
43	483734.57	1355610.43		90° HB
44	483734.57	1355597.43		90° HB
45	483902.22	1355597.43		90° HB
46	483902.22	1355518.82		90° HB
47	483439.61	1355524.18		90° HB
48	483439.61	1355594.43		90° HB
49	483725.57	1355594.43		90° HB
50	483725.57	1355607.43		90° HB
51	483731.57	1355607.43		90° HB
52	483731.57	1355594.43		90° HB
53	483899.22	1355594.43		90° HB
54	483899.22	1355519.45		90° HB

SITE STAKE OUT SCHEDULE

POINT NO.	NORTHING	EASTING	STATION	REMARKS
100	484014.86	1355463.31		COLUMN GRID INTERSECTION E-2
101	483716.86	1355510.81		COLUMN GRID INTERSECTION B-17
102	484087.00	1355539.53		FACE OF CURB
103	484087.09	1355416.69		FACE OF CURB
104	484058.18	1355420.64		FACE OF CURB
105	484054.89	1355358.65		FACE OF CURB
106	483905.18	1355420.65		FACE OF CURB
107	483896.29	1355359.05		FACE OF CURB
108	483831.32	1355420.65		FACE OF CURB
109	483651.32	1355420.65		FACE OF CURB
110	483631.13	1355416.65		FACE OF CURB
111	483631.13	1355558.91		FACE OF CURB
112	483650.53	1355557.91		FACE OF CURB
113	483804.86	1355557.91		FACE OF CURB
114	483819.20	1355597.76		INSIDE CORNER OF DUMPSTER ENCLOSURE
115	483811.17	1355620.38		INSIDE CORNER OF DUMPSTER ENCLOSURE
116	483758.75	1355601.77		FACE OF CURB
117	483710.17	1355619.91		FACE OF CURB
118	483638.17	1355619.91		FACE OF CURB
119	483530.32	1355674.36		FACE OF CURB
120	483587.19	1355588.15		FACE OF CURB
121	483434.19	1355588.15		FACE OF CURB
122	483412.31	1355494.15		FACE OF CURB
123	483382.42	1355526.66		FACE OF CURB
124	483394.70	1355619.10		FACE OF CURB
125	483378.47	1355421.91		FACE OF CURB
126	483378.27	1355440.12		FACE OF CURB
133	483592.13	1355470.15		FACE OF CURB
134	483550.91	1355323.65		FACE OF CURB
135	483597.73	1355254.35		FACE OF CURB
136	483648.64	1355271.60		FACE OF CURB
137	483837.64	1355271.60		FACE OF CURB
138	483856.51	1355223.39		FACE OF CURB
143	483950.35	1355333.78		FACE OF CURB
144	483945.03	1355314.80		FACE OF CURB
145	483894.16	1355314.62		FACE OF CURB
146	484081.44	1355524.06		SIDEWALK CENTERLINE
147	484014.86	1355535.17		EDGE OF SIDEWALK
148	484001.44	1355535.18		EDGE OF SIDEWALK
149	483979.57	1355536.28		SIDEWALK CENTERLINE PT
150	483925.58	1355564.00		SIDEWALK CENTERLINE PT
151	484033.48	1355582.68		SIDEWALK CENTERLINE
152	483971.04	1355593.27		SIDEWALK CENTERLINE PT
153	483946.77	1355607.90		SIDEWALK CENTERLINE PT
154	483858.82	1355646.88		EDGE OF SIDEWALK
155	483848.90	1355646.95		EDGE OF SIDEWALK
156	483813.45	1355645.85		SIDEWALK CL INTERSECTION
157	483790.67	1355639.73		SIDEWALK CENTERLINE PT
158	483726.80	1355632.85		SIDEWALK CENTERLINE PT
159	483720.38	1355630.99		EDGE OF SIDEWALK

SITE STAKE OUT SCHEDULE

POINT NO.	NORTHING	EASTING	STATION	REMARKS
160	483715.38	1355631.40		EDGE OF SIDEWALK
161	483647.38	1355630.56		SIDEWALK CENTERLINE PT
162	483625.85	1355624.32		SIDEWALK CENTERLINE
163	483803.51	1355673.85		SIDEWALK CENTERLINE PT
164	483803.04	1355718.69		SIDEWALK EDGE PT
165	483805.27	1355723.37		CONN TO EXST SIDEWALK
166	483809.73	1355721.25		CONN TO EXST SIDEWALK
167	483808.52	1355718.78		SIDEWALK EDGE PT
168	483806.27	1355719.88		SIDEWALK CENTERLINE PT
169	483806.58	1355686.28		SIDEWALK CENTERLINE PT
170	483855.97	1355649.86		SIDEWALK CENTERLINE PT
171	483659.80	1355472.11		EDGE OF SIDEWALK
172	483641.80	1355472.11		EDGE OF SIDEWALK
173	483641.80	1355522.11		EDGE OF SIDEWALK
174	483659.80	1355522.11		EDGE OF SIDEWALK

100% SUBMITTAL

AECOM

AECOM TECHNICAL SERVICES, INC.
3101 WILSON BOULEVARD
SUITE 900
ARLINGTON, VA 22201

T: 703-682-4900 F: 703.682.4901
www.aecom.com

SEAL AREA

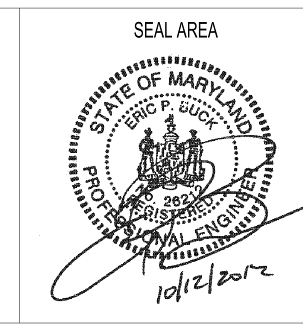

KEY PLAN

REV	DATE	DESCRIPTION	S&R BR.	CUSTOMER	PM	SECT. HEAD

	INITIALS	DATE
DRAWN BY	MLF	06/17/11
CHECKED BY	FM	
A-E MANAGER	REW	
ENVIRONMENTAL BRANCH	EEW JH	
SAFETY BRANCH	CS	
CM	MMD	
PM	RWP	
CUSTOMER	JWB	
ENG. BRANCH	DGL	

STRUCTURE SCHEDULES & STAKEOUT DATA

C-601

FLIGHT PROJECTS BUILDING

NATIONAL AERONAUTICS AND SPACE ADMINISTRATION

GODDARD SPACE FLIGHT CENTER GREENBELT, MARYLAND
FACILITIES MANAGEMENT DIVISION

DATE ISSUED	CoF CODE OR WR#	AECOM PROJECT NO.	SCALE
10/12/2012	12GXAZ	60187636	

FILE DATE: 10/10/2012 2:01:27 PM

File Location: M:\WATER\60190712 GODDARD SPACE FLIGHT CENTER\0001\CADD\DWG\90712C_601.DWG

Plotted By: FRAZIER, MICHELLE; Plot Date: Wednesday, October 10, 2012; Plot CTB File: ----; Page Setup Name: ----; InsUnits: 2; LTScale: 1.00 Measurement: 0;

TIE INTO EXISTING CONCRETE WALK.

1 L101

LIMIT OF WORK

6'-0"

1 L-501 CONCRETE WALK

EXISTING STORMWATER MANAGEMENT POND

LIMIT OF WORK

2'-6" TYP.

7 L502 LIGHTING FIXTURE TYPE B, TYP.

1 L-100 BID OPTION #3 LAYOUT

EXPLORER ROAD

FFE = 196.50

FLIGHT PROJECTS BUILDING

FPB

±12'

– C-511 CURB CUT RAMP

2'-6"

6'-0" 7'-0" 2'-6"

LIMIT OF WORK

41'-9"

CURB CUT RAMP – C-511 SIM.

MATCH WIDTH AND DIRECTION OF EXISTING CONCRETE SIDEWALK.

2'-6"

6'-0" 6'-0"

– C-511 CURB CUT RAMP SIM.

1 L-501 CONCRETE WALK

7'-3"

70'-6" 77'-9"

2'-6" TYP.

6'-0" 6'-0"

MATCH WIDTH OF EXISTING CONCRETE SIDEWALK.

BLDG. 12

BUILDING 012

2-1/2 STORY BRICK

EXPLORER ROAD

BLDG. 23

BUILDING 023

4 STORY BRICK

ROAD 6

6'-0" TYP.

1 L-501 CONCRETE WALK

LIMIT OF WORK

– C-511 CURB CUT RAMP

MINITRACK ROAD

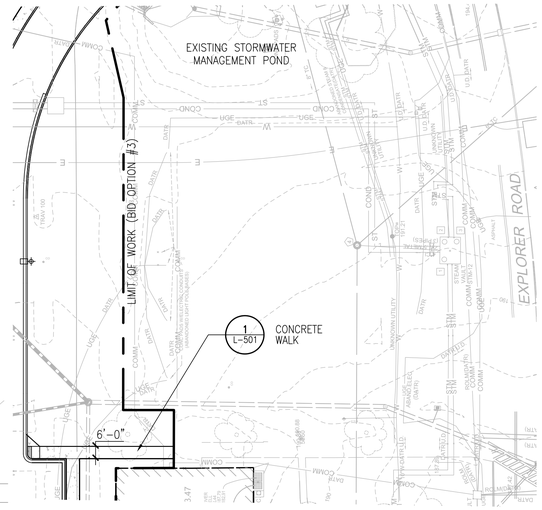

1 **BID OPTION #3**
SCALE: 1/8" = 1'-0"

NOTES:
1.) FOR ADDITIONAL WALKWAYS DIMENSIONS REFER TO SHEET C-103.

LEGEND

A PEDESTRIAN LIGHTING, REFER TO SHEET L-502

B GENERAL PARKING LIGHTING

30 FEET 0 15 30 60

100% SUBMITTAL

AECOM

AECOM TECHNICAL SERVICES, INC.
3101 WILSON BOULEVARD
SUITE 900
ARLINGTON, VA 22201

T: 703-682-4900 F: 703.682.4901
www.aecom.com

SEAL AREA

STATE OF MARYLAND ROGER GUY COURTNEY NO. 970 LANDSCAPE ARCHITECT

KEY PLAN

REV	DATE	DESCRIPTION	S&R BR.	CUSTOMER	PM	SECT. HEAD

	INITIALS	DATE
DRAWN BY	CC, SW	
CHECKED BY	MA, JP	
A-E MANAGER	EW	
ENVIRONMENTAL BRANCH	JH	
SAFETY BRANCH	CS	
CM	MMD	
PM	RWP	
CUSTOMER	JWB	
ENG. BRANCH	DGL	
LANDSCAPE		

OVERALL LANDSCAPE SITE PLAN

L-100

FLIGHT PROJECTS BUILDING

NATIONAL AERONAUTICS AND SPACE ADMINISTRATION

GODDARD SPACE FLIGHT CENTER GREENBELT, MARYLAND
FACILITIES MANAGEMENT DIVISION

DATE ISSUED	CoF CODE OR WR#	AECOM PROJECT NO.	SCALE
10/12/2012	12GXAZ	60187636	1" = 30'-0"

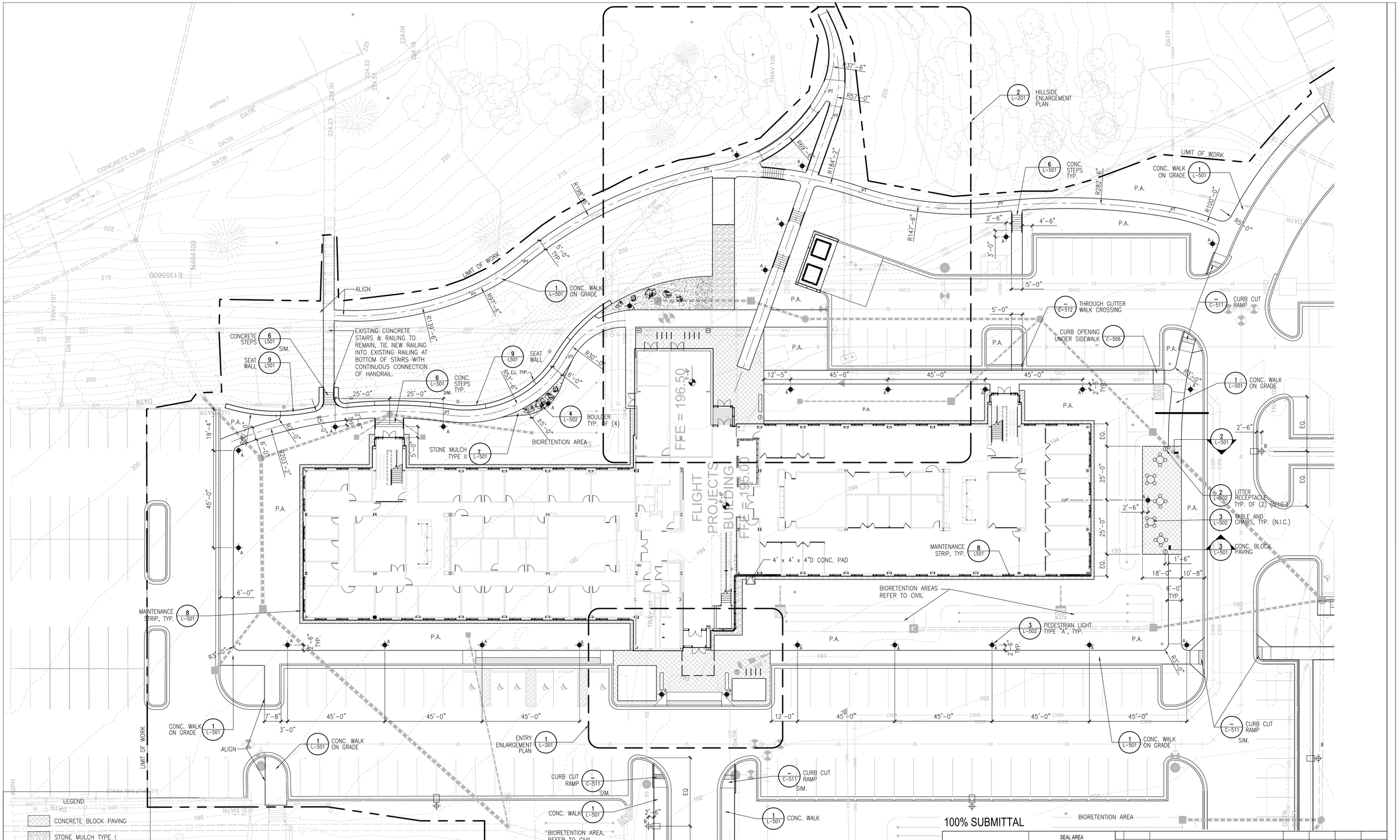

100% SUBMITTAL

AECOM

AECOM TECHNICAL SERVICES, INC.
3101 WILSON BOULEVARD
SUITE 900
ARLINGTON, VA 22201

T: 703-682-4900 F: 703.682.4901
www.aecom.com

SEAL AREA

KEY PLAN

REV	DATE	DESCRIPTION	S&R BR.	CUSTOMER	PM	SECT. HEAD

	INITIALS	DATE
DRAWN BY	GDL, SAG	
CHECKED BY	MA, JP	
A-E MANAGER	EW	
ENVIRONMENTAL BRANCH	JH	
SAFETY BRANCH	CS	
CM	MMD	
PM	RWP	
CUSTOMER	JWB	
ENG. BRANCH	DGL	
LANDSCAPE		

LANDSCAPE ENLARGEMENT SITE PLAN

L-101

FLIGHT PROJECTS BUILDING

NATIONAL AERONAUTICS AND SPACE ADMINISTRATION

GODDARD SPACE FLIGHT CENTER GREENBELT, MARYLAND
FACILITIES MANAGEMENT DIVISION

DATE ISSUED	CoF CODE OR WR#	AECOM PROJECT NO.	SCALE
10/12/2012	12GXAZ	60187636	1/16" = 1'-0"

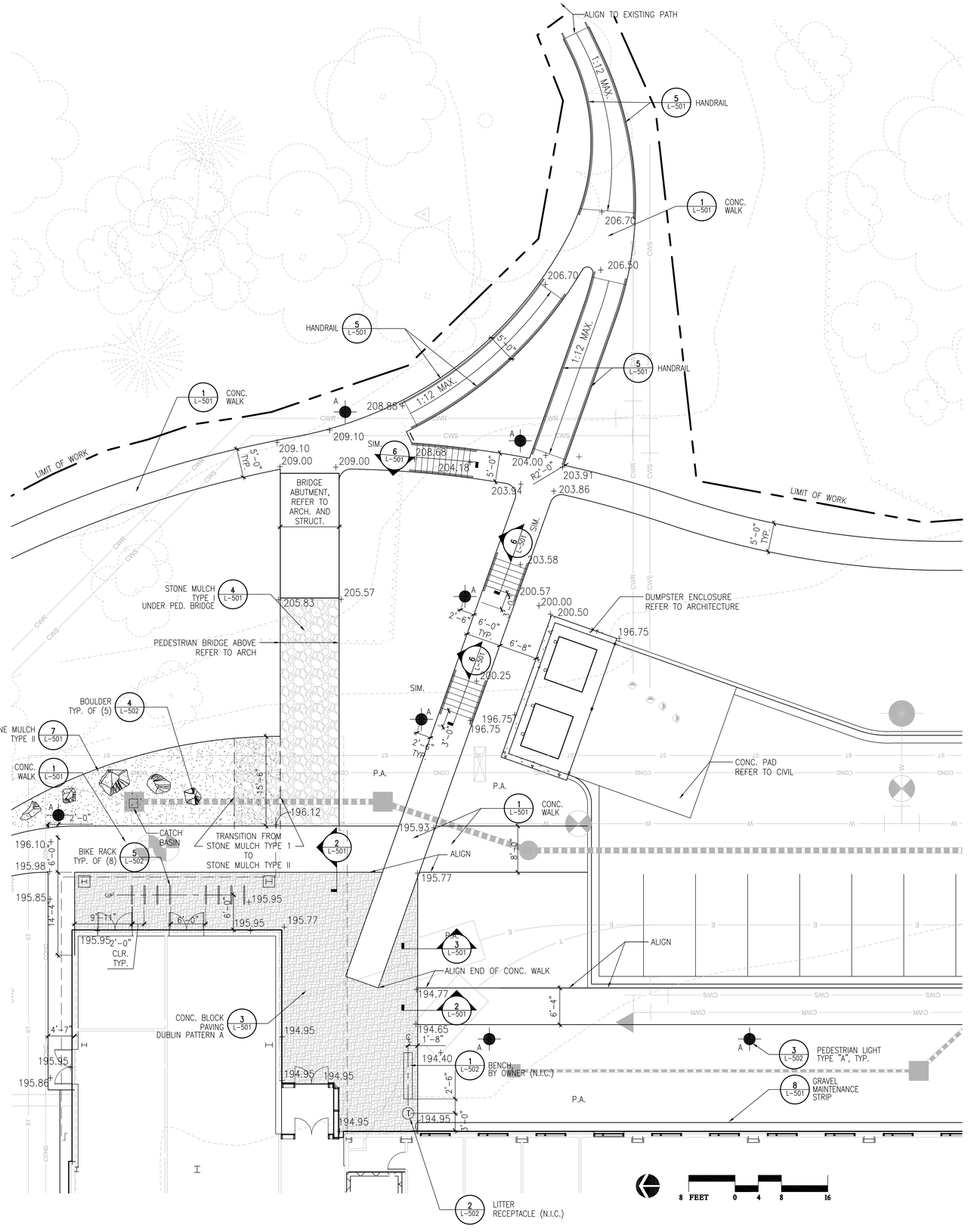

2 HILLSIDE ENLARGEMENT PLAN

SCALE: 1/8" = 1'-0" HILLSIDE ENLARGEMENT PLAN.dwg

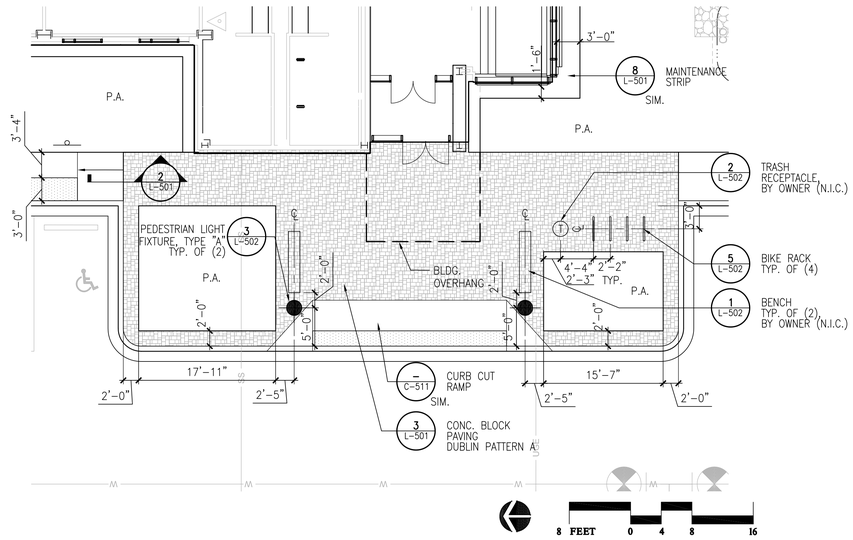

1 ENTRY ENLARGEMENT PLAN

SCALE: 1/8" = 1'-0" ENTRT ENLARGEMENT PLAN.dwg

100% SUBMITTAL

AECOM

AECOM TECHNICAL SERVICES, INC.
3101 WILSON BOULEVARD
SUITE 900
ARLINGTON, VA 22201

T: 703.682.4900 F: 703.682.4901
www.aecom.com

SEAL AREA

STATE OF MARYLAND ROGER GUY COUNTRYMAN REGISTERED LANDSCAPE ARCHITECT NO. 970

KEY PLAN

REV	DATE	DESCRIPTION	S&R BR.	CUSTOMER	PM	SECT. HEAD

	INITIALS	DATE
DRAWN BY	CC, SW	
CHECKED BY	MA, JP	
A-E MANAGER	EW	
ENVIRONMENTAL BRANCH	JH	
SAFETY BRANCH	CS	
CM	MMD	
PM	RWP	
CUSTOMER	JWB	
ENG. BRANCH	DGL	
LANDSCAPE		

ENTRY & HILLSIDE ENLARGEMENT PLANS

L-201

FLIGHT PROJECTS BUILDING

NATIONAL AERONAUTICS AND SPACE ADMINISTRATION

GODDARD SPACE FLIGHT CENTER GREENBELT, MARYLAND
FACILITIES MANAGEMENT DIVISION

DATE ISSUED	CoF CODE OR WR#	AECOM PROJECT NO.	SCALE
10/12/2012	12GXAZ	60187636	AS SHOWN

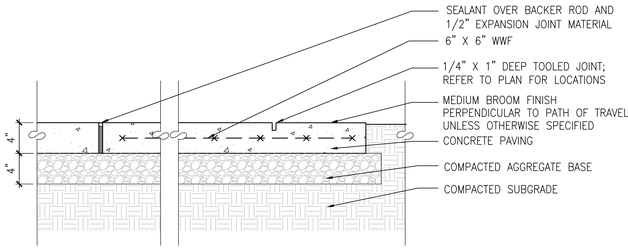

NOTES:
1. INSTALL 1/2" EXPANSION JOINTS WITH SEALANT WHEN PAVING IS ADJACENT TO VERTICAL FACES, CURBS, STEPS, ANY FIXED OBJECT, OR OTHER RIGID PAVING MATERIAL, AND AT A MAXIMUM 20' O.C. OR AS OTHERWISE NOTED ON PLANS.
2. MEET FLUSH WITH ADJACENT HARDSCAPE FINISH GRADES

1 CONCRETE WALK
SCALE: 1-1/2" = 1'-0" DT-PAVE-CONC_AGGR.dwg

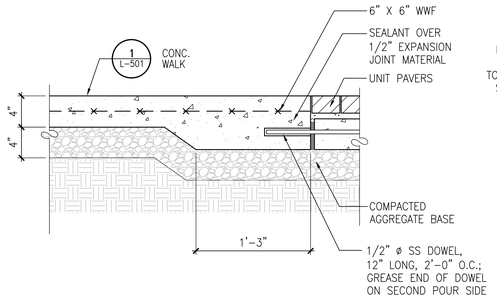

2 CONCRETE / UNIT PAVERS TRANSITION
SCALE: 1-1/2" = 1'-0" DT-PAVE-CONC-UNIT-TRAN.dwg

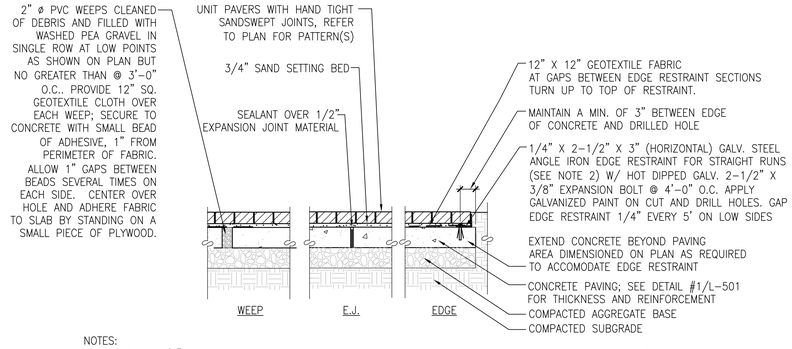

NOTES:
1. INSTALL 1/2" EXPANSION JOINT WITH SEALANT WHEN PAVING IS ADJACENT TO VERTICAL FACES, CURBS, STEPS, ANY FIXED OBJECT,OR OTHER RIGID PAVING MATERIAL, AND AT A MAXIMUM 20' O.C. UNLESS OTHERWISE NOTED ON PLANS.
2. MEET FLUSH WITH ADJACENT HARDSCAPE FINISH GRADES
3. START LAYING PAVERS ON SIDE OPPOSITE EDGE RESTRAINT, INSTALL LAST ROW TEMPORARILY TO POSITION EDGE RESTRAINT TO AVOID CUT PAVERS (STRAIGHT SECTIONS ONLY)
4. REFER TO DRAINAGE DETAIL IF UNIT PAVERS SLOPE TO RESTRAINT.

3 UNIT PAVERS ON SLAB WITH EDGE RESTRAINT
SCALE: 1" = 1'-0" DT-PAVE-UNIT_CONC-SAND.dwg

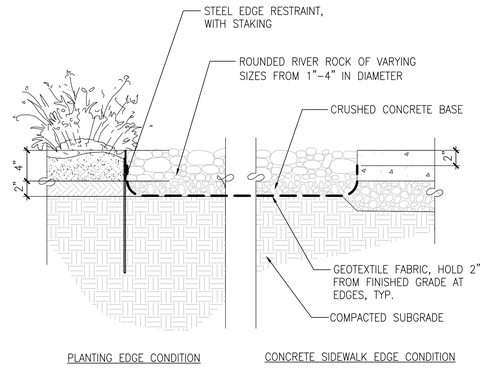

4 STONE MULCH TYPE I
SCALE: 1-1/2" = 1'-0" DT-ROCK MULCH.dwg

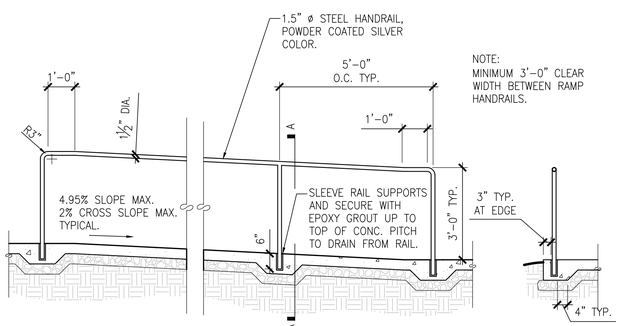

NOTE:
MINIMUM 3'-0" CLEAR WIDTH BETWEEN RAMP HANDRAILS.

5 SLOPED WALK HANDRAIL
SCALE: 1/2" = 1'-0" DT-RAILING.dwg

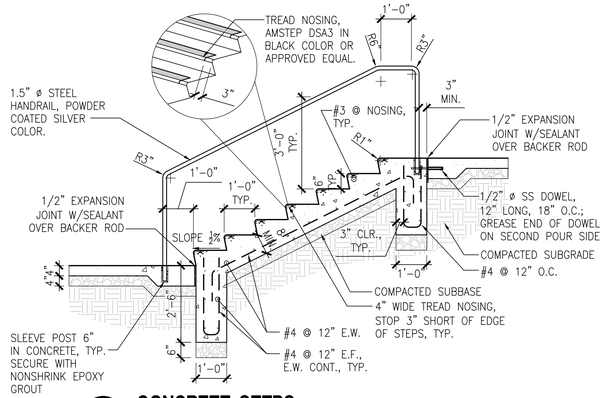

6 CONCRETE STEPS
SCALE: 1/2" = 1'-0" DT-STEPS.dwg

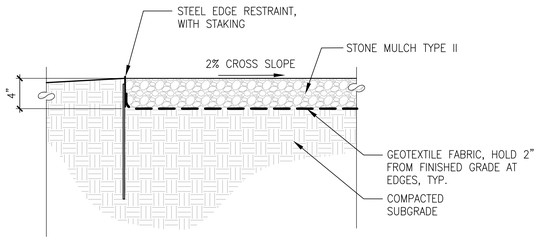

7 STONE MULCH TYPE II
SCALE: 1-1/2" = 1'-0" DT-PAVE-GRAV.dwg

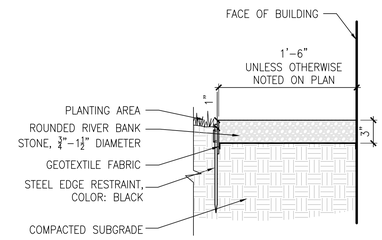

8 GRAVEL MAINTENANCE STRIP
SCALE: 1 1/2" = 1'-0" DT-GRAVEL STRIP.dwg

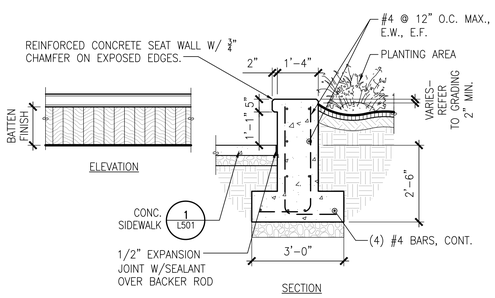

NOTE:
PROVIDE SEALED FULL-DEPTH EXPANSION JOINTS AT LOCATIONS SHOWN ON PLAN.

9 SEAT WALL
SCALE: 1/2" = 1'-0" DT-SEAT WALL.dwg

100% SUBMITTAL

AECOM

AECOM TECHNICAL SERVICES, INC.
3101 WILSON BOULEVARD
SUITE 900
ARLINGTON, VA 22201

T: 703-682-4900 F: 703.682.4901
www.aecom.com

SEAL AREA

STATE OF MARYLAND
ROGER GUY COUTEMANCHE
No. 970
LANDSCAPE ARCHITECT

KEY PLAN

REV	DATE	DESCRIPTION	S&R BR.	CUSTOMER	PM	SECT. HEAD

	INITIALS	DATE
DRAWN BY	CC, SW	
CHECKED BY	MA, JP	
A-E MANAGER	EW	
ENVIRONMENTAL BRANCH	JH	
SAFETY BRANCH	CS	
CM	MMD	
PM	RWP	
CUSTOMER	JWB	
ENG. BRANCH	DGL	
LANDSCAPE		

SITE DETAILS

L-501

FLIGHT PROJECTS BUILDING

NATIONAL AERONAUTICS AND SPACE ADMINISTRATION
GODDARD SPACE FLIGHT CENTER GREENBELT, MARYLAND
FACILITIES MANAGEMENT DIVISION

DATE ISSUED	CoF CODE OR WR#	AECOM PROJECT NO.	SCALE
10/12/2012	12GXAZ	60187636	AS SHOWN

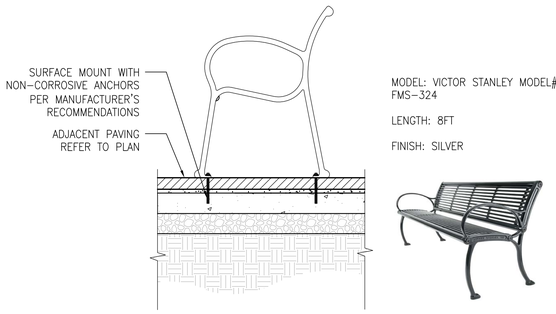

MODEL: VICTOR STANLEY MODEL# FMS-324

LENGTH: 8FT

FINISH: SILVER

NOTE: ONE EXPANSION BOLT FOR EACH LEG

1 BENCH MOUNTING SECTION (N.I.C.)

SCALE: 1" = 1'-0" DT-BENCH.dwg

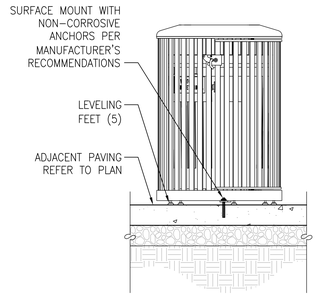

MODEL: VICTOR STANLEY MODEL# NSDC-36

CAPACITY: 36 GALLONS

FINISH: SILVER

2 LITTER RECEPTACLE (N.I.C.)

SCALE: 1" = 1'-0" DT-LITTER.dwg

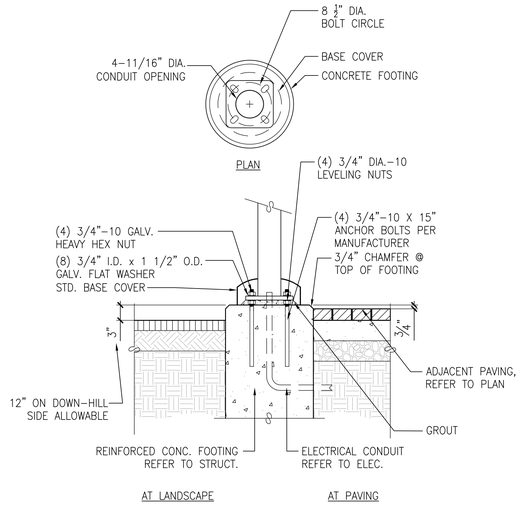

MODEL: SE'LUX
MODEL: RITORNO RRS LZ, SE' LUX REP: CHESAPEAKE LIGHTING
HEIGHT: 16FT
LAMP: 150W MH
FINISH: SILVER

3 PEDESTRIAN LIGHT "A"

SCALE: 1" = 1'-0" DT-PED LIGHT.dwg

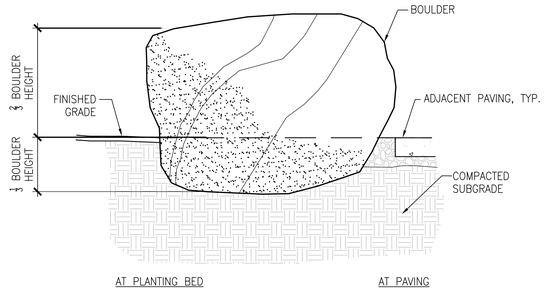

4 SITE BOULDER

SCALE: 1/2" = 1'-0"

MODEL: CREATIVE PIPE HORSEHOE RACK, MODEL# HS 2-F-SS

HEIGHT: 2'-8 1/2"

WIDTH: 3'-0"

DIAMETER: 2"

FINISH: STAINLESS STEEL

5 BIKE RACK

SCALE: 1/2" = 1'-0" DT-BIKE RACK.dwg

TABLE

MODEL: FORMS + SURFACES, SPCOL-T30R42

TABLETOP DIAMETER: 42" ROUND TOP, 30" BASE

TABLETOP HEIGHT: TABLE HEIGHT

FINISH: SILVER TEXTURE POWDERCOAT

FREESTANDING, WITH UMBRELLA HOLE

CHAIRS

MODEL: FORMS + SURFACES, SCVIS-AP VISTA STACKING ARMCHAIR, PERFORATED SEAT

FINISH: SILVER TEXTURE POWDERCOAT

6 TABLE AND CHAIRS (N.I.C.)

SCALE: 1/2" = 1'-0" DT-TABLE.dwg

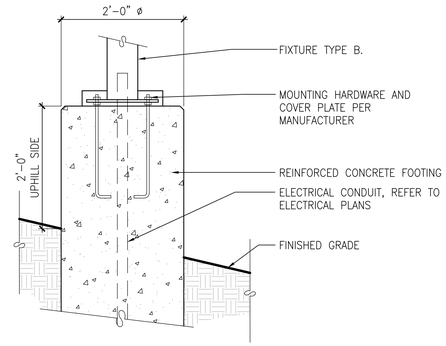

7 LIGHTING FIXTURE TYPE B

SCALE: 1" = 1'-0" DT-LGHT-FIXT-B.dwg

SITE FURNISHING SCHEDULE

QTY.		ITEM (MANUFACTURER)	FINISH	NOTES
BENCHES				
3	BENCH	MODEL# FMS-324, 8' LENGTH (VICTOR STANLEY)	SILVER	SURFACE MOUNT, INSTALL PER MANUFACTURER'S RECOMMENDATION W/ VANDAL RESISTANT HARDWARE. (BY OWNER, N.I.C.)
GATHERING AREA FURNITURE				
5	MOVEABLE TABLE	MODEL: SPCOL-T30R42; 42" ROUND TOP, 30" BASE (FORMS + SURFACES)	SILVER TEXTURE POWDERCOAT	TABLE HEIGHT, FREESTANDING, WITH UMBRELLA HOLE (BY OWNER, N.I.C)
	MOVEABLE CHAIRS	MODEL: SCVIS-AP VISTA STACKING ARMCHAIR (FORMS + SURFACES)	SILVER TEXTURE POWDERCOAT	FREESTANDING, PERFORATED SEAT (BY OWNER, N.I.C.)
TRASH RECEPTACLE				
4	TRASH RECEPTACLE	MODEL# NSDC-36, 36 GALLONS (VICTOR STANLEY)	SILVER	SURFACE MOUNT, INSTALL PER MANUFACTURER'S RECOMMENDATION W/ VANDAL RESISTANT HARDWARE. (BY OWNER, N.I.C.)
BICYCLE RACK				
5	BICYCLE RACK	HORSESHOE RACK MODEL #HS 2-F-SS (CREATIVE PIPE)	STAINLESS STEEL	FLANGED SURFACE MOUNT, INSTALL PER MANUFACTURER'S RECOMMENDATION.

100% SUBMITTAL

AECOM
AECOM TECHNICAL SERVICES, INC.
3101 WILSON BOULEVARD
SUITE 900
ARLINGTON, VA 22201
T: 703-682-4900 F: 703.682.4901
www.aecom.com

SEAL AREA

STATE OF MARYLAND
ROGER GUY COURTEAU
NO. 970
REGISTERED LANDSCAPE ARCHITECT

REV	DATE	DESCRIPTION	S&R BR.	CUSTOMER	PM	SECT. HEAD

KEY PLAN

	INITIALS	DATE
DRAWN BY	CC, SW	
CHECKED BY	MA, JP	
A-E MANAGER	EW	
ENVIRONMENTAL BRANCH	JH	
SAFETY BRANCH	CS	
CM	MMD	
PM	RWP	
CUSTOMER	JWB	
ENG. BRANCH	DGL	
LANDSCAPE		

SITE DETAILS

L-502

FLIGHT PROJECTS BUILDING

NATIONAL AERONAUTICS AND SPACE ADMINISTRATION

GODDARD SPACE FLIGHT CENTER GREENBELT, MARYLAND
FACILITIES MANAGEMENT DIVISION

DATE ISSUED	CoF CODE OR WR#	AECOM PROJECT NO.	SCALE
10/12/2012	12GXAZ	60187636	AS SHOWN

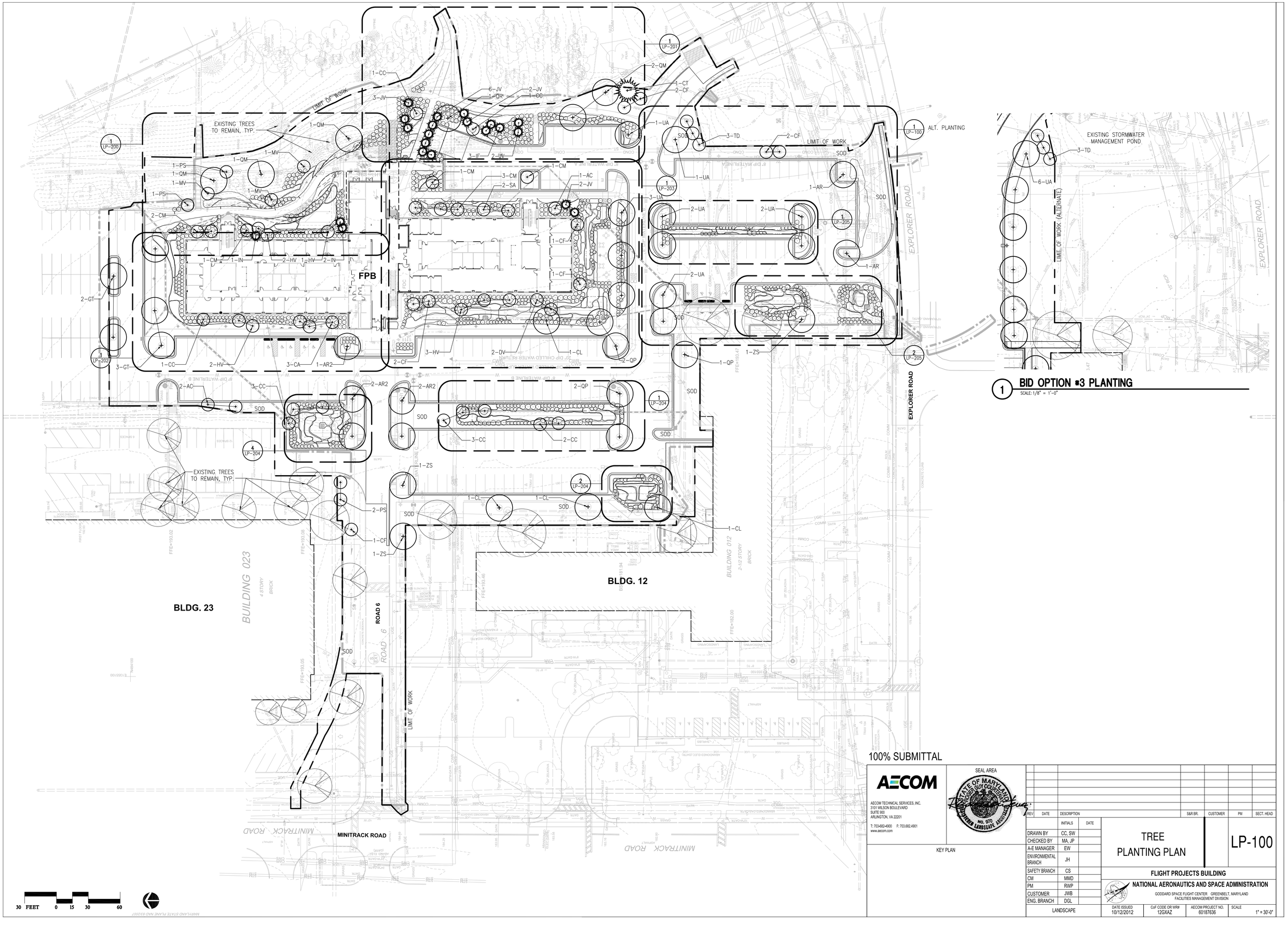

1 BID OPTION #3 PLANTING
SCALE: 1/8" = 1'-0"

100% SUBMITTAL

AECOM

AECOM TECHNICAL SERVICES, INC.
3101 WILSON BOULEVARD
SUITE 900
ARLINGTON, VA 22201

T: 703-682-4900 F: 703.682.4901
www.aecom.com

SEAL AREA

STATE OF MARYLAND
ROGER GUY COURTNEY
NO. 970
LANDSCAPE ARCHITECT

KEY PLAN

REV	DATE	DESCRIPTION	S&R BR.	CUSTOMER	PM	SECT. HEAD

	INITIALS	DATE
DRAWN BY	CC, SW	
CHECKED BY	MA, JP	
A-E MANAGER	EW	
ENVIRONMENTAL BRANCH	JH	
SAFETY BRANCH	CS	
CM	MMD	
PM	RWP	
CUSTOMER	JWB	
ENG. BRANCH	DGL	
LANDSCAPE		

TREE PLANTING PLAN

LP-100

FLIGHT PROJECTS BUILDING

NATIONAL AERONAUTICS AND SPACE ADMINISTRATION
GODDARD SPACE FLIGHT CENTER GREENBELT, MARYLAND
FACILITIES MANAGEMENT DIVISION

DATE ISSUED	CoF CODE OR WR#	AECOM PROJECT NO.	SCALE
10/12/2012	12GXAZ	60187636	1" = 30'-0"

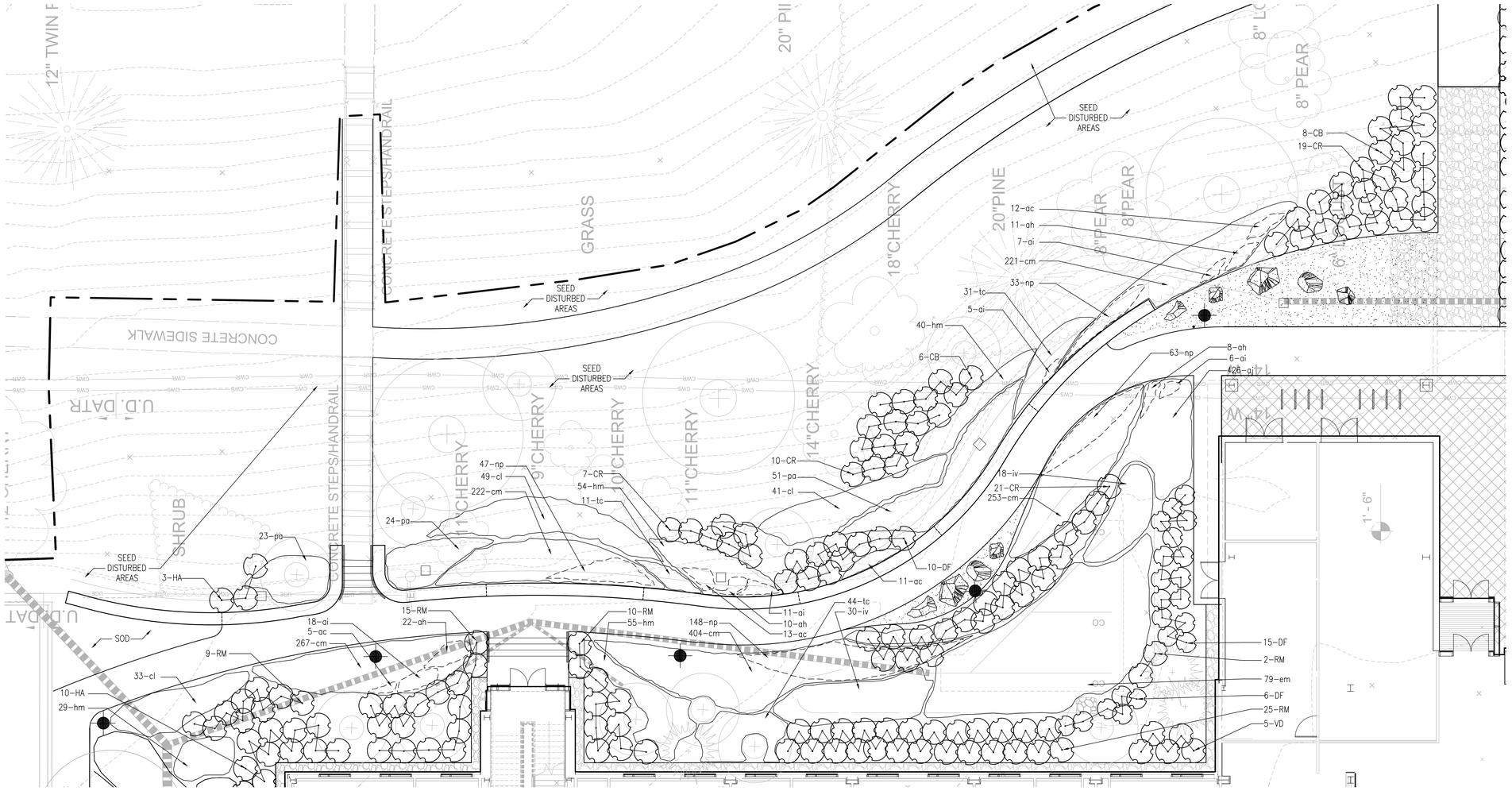

NOTE: DASHED AREAS REPRESENT SPECIES (BULBS) TO BE PLANTED UNDER GROUNDCOVER/PERENNIAL AREAS. REFER TO UNDERPLANTING DETAIL #4/LP-502

1 NORTH CORNER PLANTING ENLARGEMENT PLAN

SCALE: 1/8" = 1'-0"

8 FEET 0 4 8 16

100% SUBMITTAL

AECOM

AECOM TECHNICAL SERVICES, INC.
3101 WILSON BOULEVARD
SUITE 900
ARLINGTON, VA 22201

T: 703-682-4900 F: 703.682.4901
www.aecom.com

SEAL AREA

STATE OF MARYLAND
ROGER GUY POWERS
No. 970
REGISTERED LANDSCAPE ARCHITECT

KEY PLAN

REV	DATE	DESCRIPTION	S&R BR.	CUSTOMER	PM	SECT. HEAD

	INITIALS	DATE
DRAWN BY	CC, SW	
CHECKED BY	MA, JP	
A-E MANAGER	EW	
ENVIRONMENTAL BRANCH	JH	
SAFETY BRANCH	CS	
CM	MMD	
PM	RWP	
CUSTOMER	JWB	
ENG. BRANCH	DGL	
LANDSCAPE		

NE CORNER PLANTING ENLARGEMENT PLAN

LP-200

FLIGHT PROJECTS BUILDING

NATIONAL AERONAUTICS AND SPACE ADMINISTRATION

GODDARD SPACE FLIGHT CENTER GREENBELT, MARYLAND
FACILITIES MANAGEMENT DIVISION

DATE ISSUED	CuF CODE OR WR#	AECOM PROJECT NO.	SCALE
10/12/2012	12GXAZ	60187636	1/8" = 1'-0"

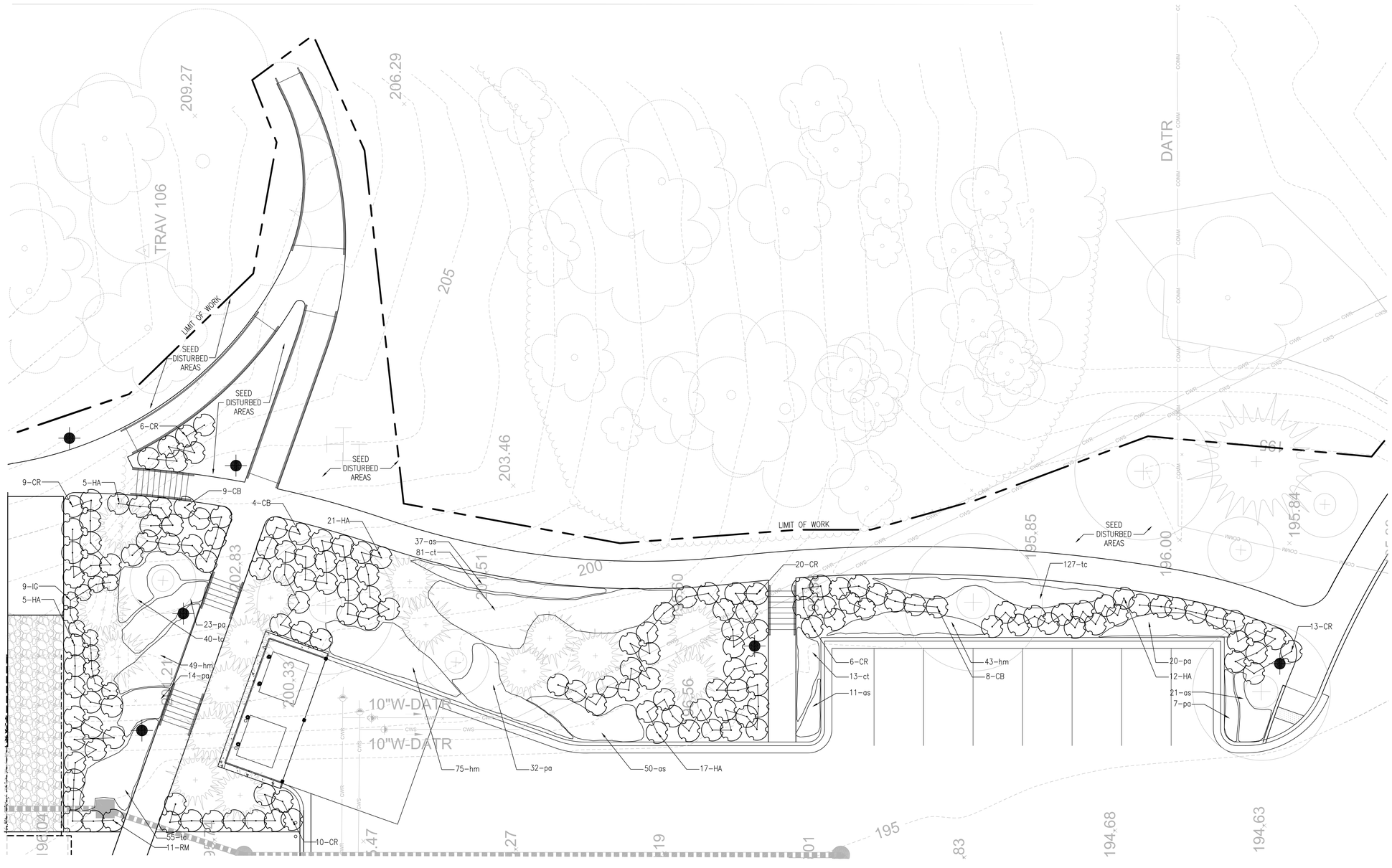

1 HILLSIDE PLANTING ENLARGEMENT

SCALE: 1/8" = 1'-0"

100% SUBMITTAL

AECOM

AECOM TECHNICAL SERVICES, INC.
3101 WILSON BOULEVARD
SUITE 900
ARLINGTON, VA 22201

T: 703-682-4900 F: 703.682.4901
www.aecom.com

SEAL AREA

STATE OF MARYLAND
ROGER GUY CORTEZ
No. 970
LICENSED LANDSCAPE ARCHITECT

KEY PLAN

REV	DATE	DESCRIPTION	S&R BR.	CUSTOMER	PM	SECT. HEAD

	INITIALS	DATE
DRAWN BY	CC, SW	
CHECKED BY	MA, JP	
A-E MANAGER	EW	
ENVIRONMENTAL BRANCH	JH	
SAFETY BRANCH	CS	
CM	MMD	
PM	RWP	
CUSTOMER	JWB	
ENG. BRANCH	DGL	
LANDSCAPE		

HILLSIDE PLANTING ENLARGEMENT PLAN

LP-201

FLIGHT PROJECTS BUILDING

NATIONAL AERONAUTICS AND SPACE ADMINISTRATION

GODDARD SPACE FLIGHT CENTER GREENBELT, MARYLAND
FACILITIES MANAGEMENT DIVISION

DATE ISSUED	CoF CODE OR WR#	AECOM PROJECT NO.	SCALE
10/12/2012	12GXAZ	60187636	1/8" = 1'-0"

8 FEET 0 4 8 16

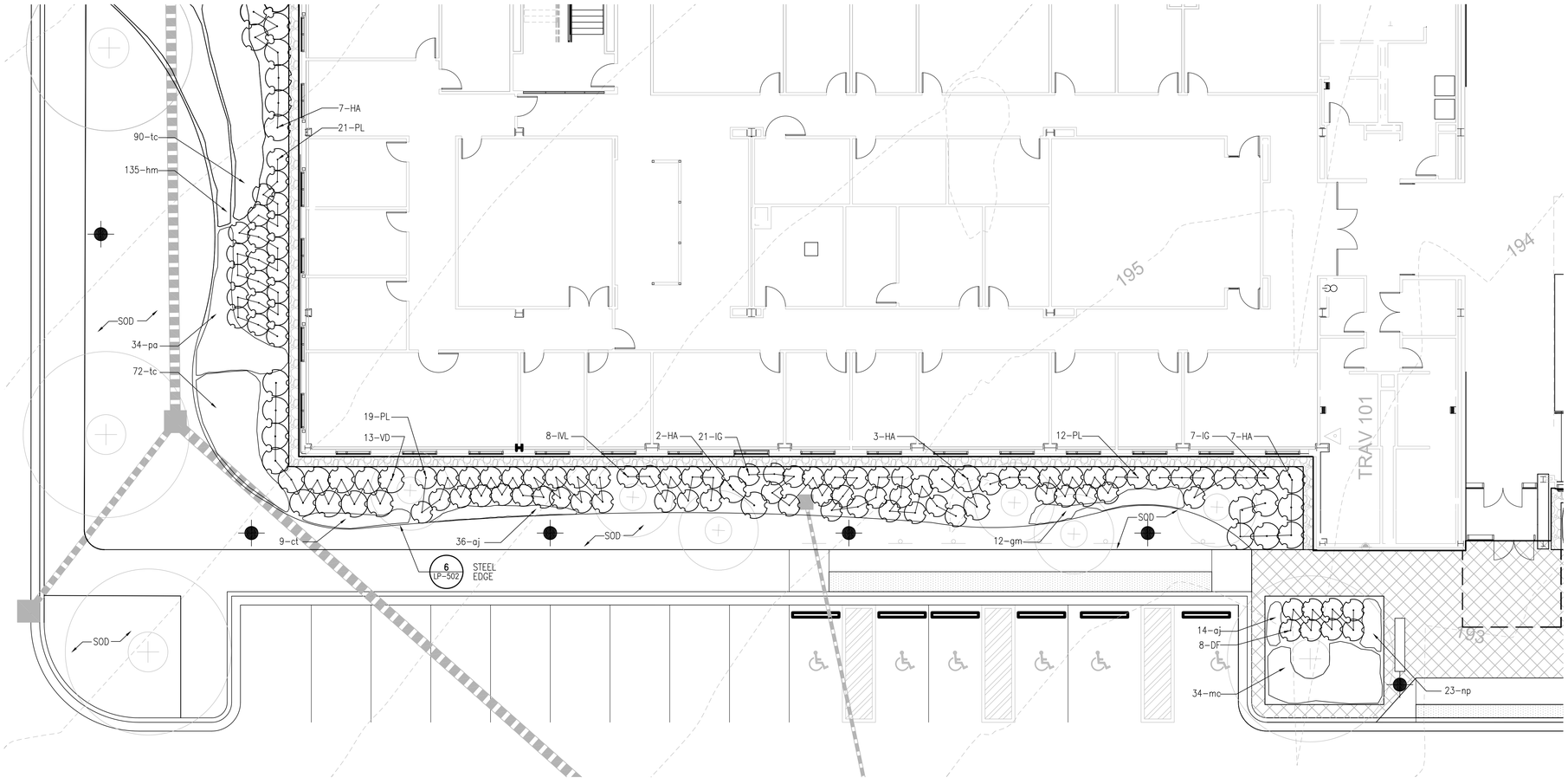

1 NW CORNER PLANTING ENLARGEMENT

SCALE: 1/8" = 1'-0"

100% SUBMITTAL

AECOM

AECOM TECHNICAL SERVICES, INC.
3101 WILSON BOULEVARD
SUITE 900
ARLINGTON, VA 22201

T: 703-682-4900 F: 703.682.4901
www.aecom.com

SEAL AREA

STATE OF MARYLAND
RODGER GUY COUNTISS
NO. 970
PROFESSIONAL LANDSCAPE ARCHITECT

KEY PLAN

REV	DATE	DESCRIPTION	S&R BR.	CUSTOMER	PM	SECT. HEAD

	INITIALS	DATE
DRAWN BY	CC, SW	
CHECKED BY	MA, JP	
A-E MANAGER	EW	
ENVIRONMENTAL BRANCH	JH	
SAFETY BRANCH	CS	
CM	MMD	
PM	RWP	
CUSTOMER	JWB	
ENG. BRANCH	DGL	
LANDSCAPE		

NW CORNER PLANTING ENLARGEMENT PLAN

LP-202

FLIGHT PROJECTS BUILDING

NATIONAL AERONAUTICS AND SPACE ADMINISTRATION

GODDARD SPACE FLIGHT CENTER GREENBELT, MARYLAND
FACILITIES MANAGEMENT DIVISION

DATE ISSUED	CoF CODE OR WR#	AECOM PROJECT NO.	SCALE
10/12/2012	12GXAZ	60187636	1/8" = 1'-0"

8 FEET 0 4 8 16

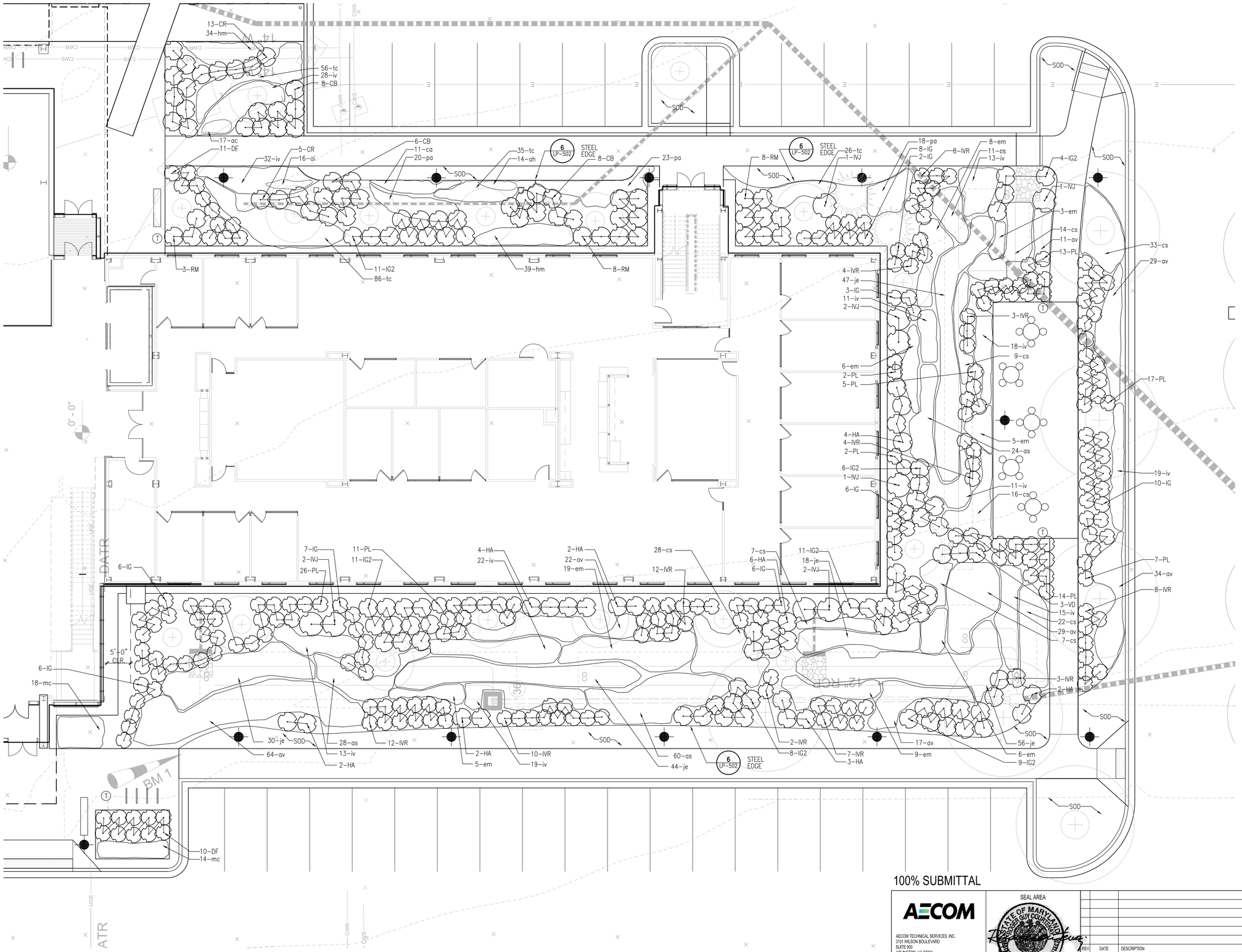

100% SUBMITTAL

1 SOUTH PLANTING ENLARGEMENT

SCALE: 1/8" = 1'-0"

8 FEET 0 4 8 16

AECOM

AECOM TECHNICAL SERVICES, INC.
3101 WILSON BOULEVARD
SUITE 900
ARLINGTON, VA 22201

T: 703-682-4900 F: 703.682.4901
www.aecom.com

SEAL AREA

STATE OF MARYLAND
ROGER GUY DOWNING
NO. 970
REGISTERED LANDSCAPE ARCHITECT

KEY PLAN

REV	DATE	DESCRIPTION	S&R BR.	CUSTOMER	PM	SECT. HEAD

	INITIALS	DATE
DRAWN BY	CC, SW	
CHECKED BY	MA, JP	
A-E MANAGER	EW	
ENVIRONMENTAL BRANCH	JH	
SAFETY BRANCH	CS	
CM	MMD	
PM	RWP	
CUSTOMER	JWB	
ENG. BRANCH	DGL	
LANDSCAPE		

SOUTH PLANTING ENLARGEMENT PLAN

LP-203

FLIGHT PROJECTS BUILDING

NATIONAL AERONAUTICS AND SPACE ADMINISTRATION

GODDARD SPACE FLIGHT CENTER GREENBELT, MARYLAND
FACILITIES MANAGEMENT DIVISION

DATE ISSUED	CoF CODE OR WR#	AECOM PROJECT NO.	SCALE
10/12/2012	12GXAZ	60187636	1/8" = 1'-0"

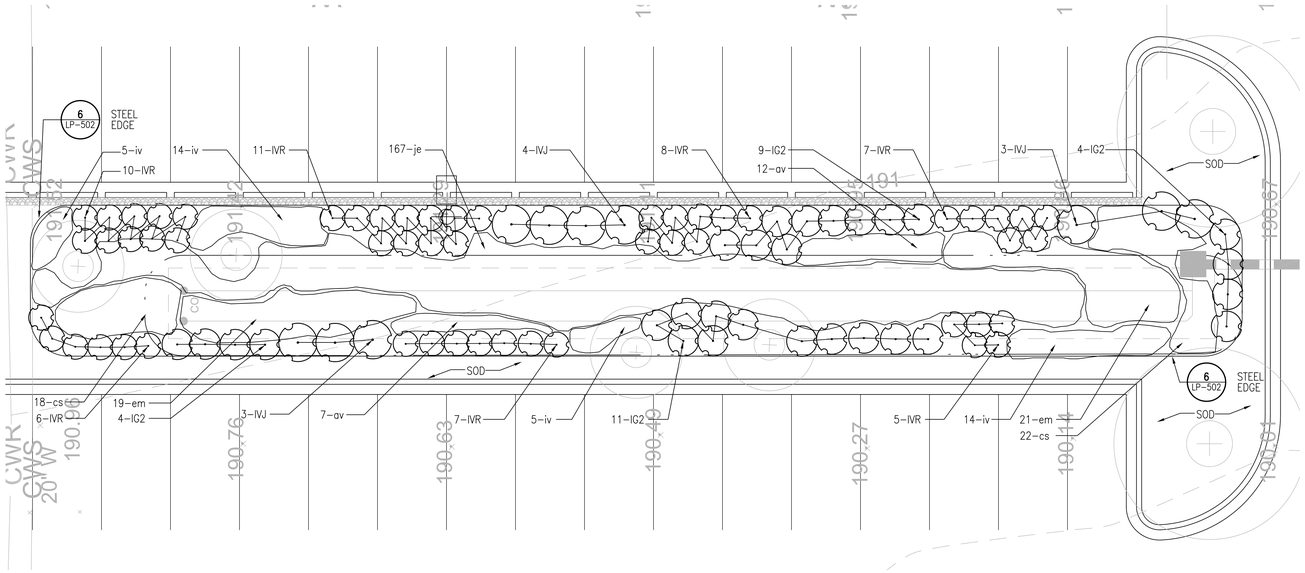

1 **BMP PLANTING ENLARGEMENT**
SCALE: 1/8" = 1'-0"

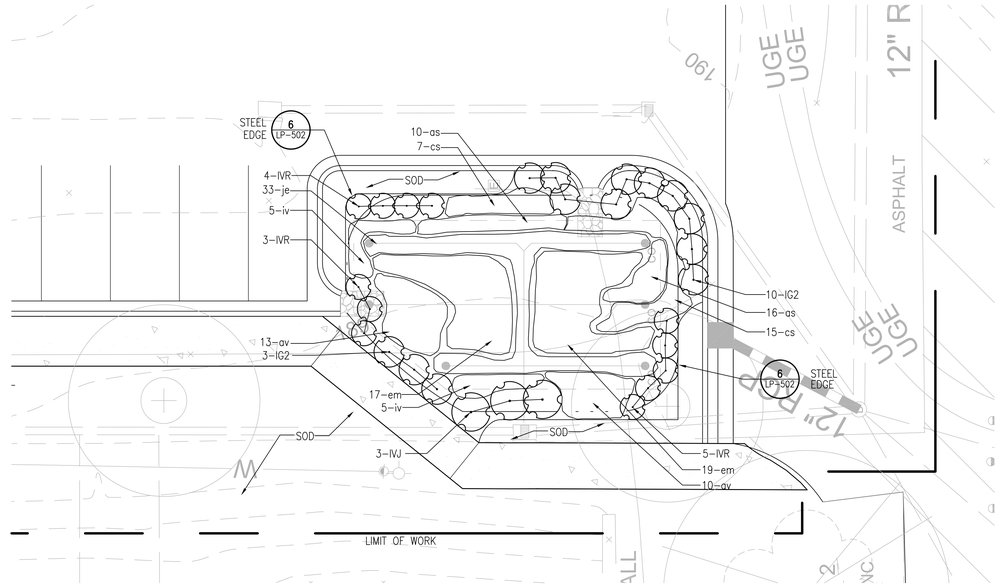

2 **BMP PLANTING ENLARGEMENT**
SCALE: 1/8" = 1'-0"

3 **NOT USED**
SCALE:

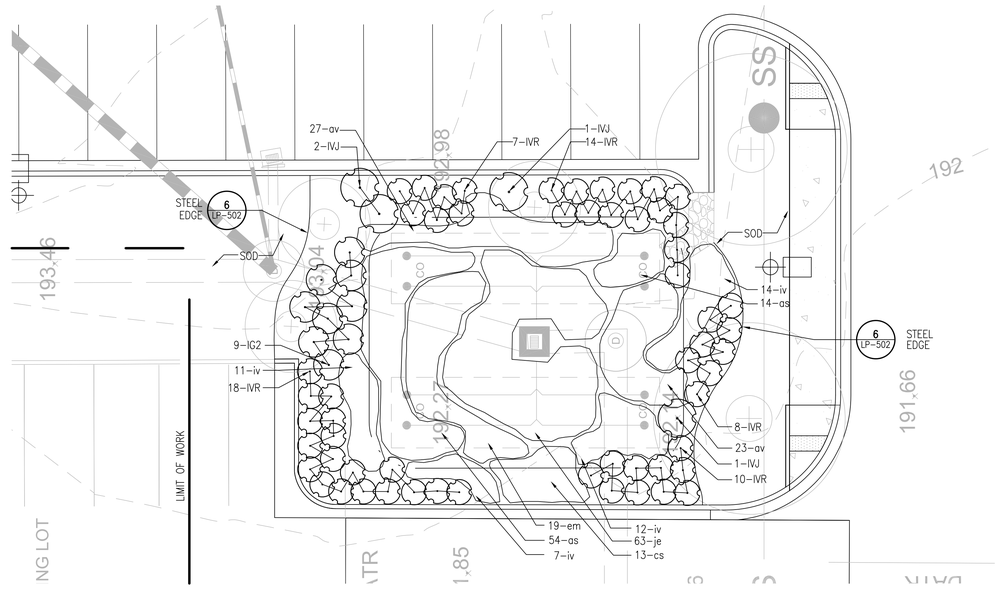

4 **BMP PLANTING ENLARGEMENT**
SCALE: 1/8" = 1'-0"

100% SUBMITTAL

AECOM

AECOM TECHNICAL SERVICES, INC.
3101 WILSON BOULEVARD
SUITE 900
ARLINGTON, VA 22201

T: 703-682-4900 F: 703.682.4901
www.aecom.com

SEAL AREA

STATE OF MARYLAND ROSS GUY COURTEAU REGISTERED LANDSCAPE ARCHITECT NO. 970

KEY PLAN

REV	DATE	DESCRIPTION	S&R BR.	CUSTOMER	PM	SECT. HEAD

	INITIALS	DATE
DRAWN BY	CC, SW	
CHECKED BY	MA, JP	
A-E MANAGER	EW	
ENVIRONMENTAL BRANCH	JH	
SAFETY BRANCH	CS	
CM	MMD	
PM	RWP	
CUSTOMER	JWB	
ENG. BRANCH	DGL	
LANDSCAPE		

BMP PLANTING ENLARGMENT PLANS

LP-204

FLIGHT PROJECTS BUILDING

NATIONAL AERONAUTICS AND SPACE ADMINISTRATION
GODDARD SPACE FLIGHT CENTER GREENBELT, MARYLAND
FACILITIES MANAGEMENT DIVISION

DATE ISSUED	CoF CODE OR WR#	AECOM PROJECT NO.	SCALE
10/12/2012	12GXAZ	60187636	1/8" = 1'-0"

8 FEET 0 4 8 16

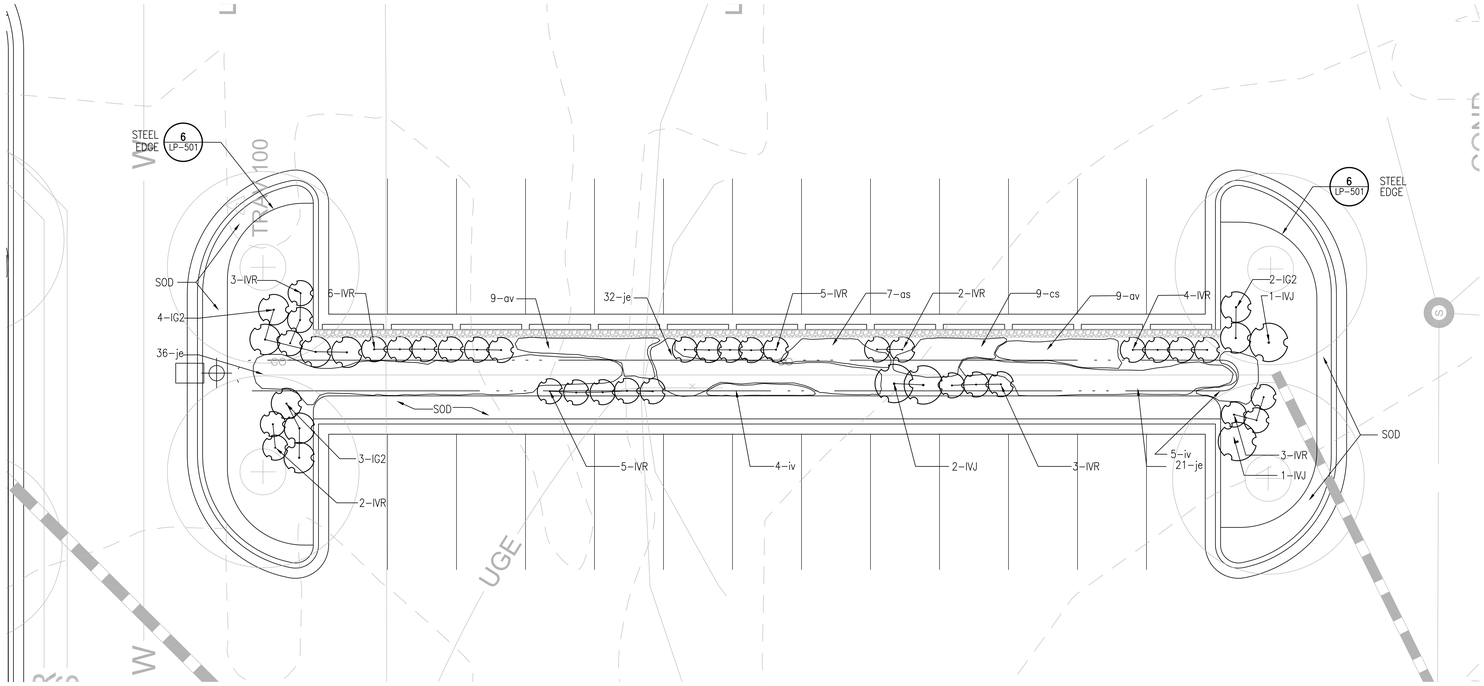

1 BMP PLANTING ENLARGEMENT

SCALE: 1/8" = 1'-0"

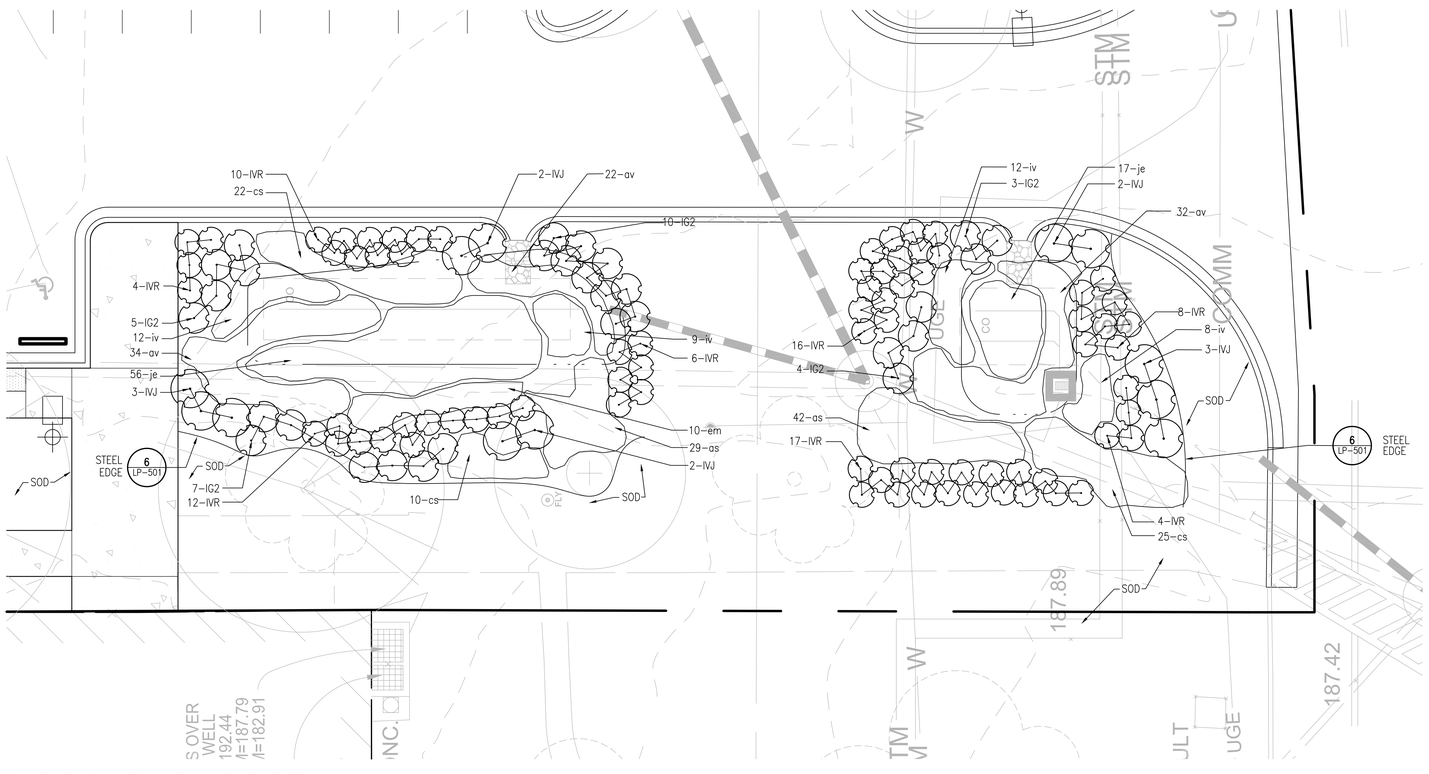

2 BMP PLANTING ENLARGEMENT

SCALE: 1/8" = 1'-0"

8 FEET 0 4 8 16

100% SUBMITTAL

AECOM

AECOM TECHNICAL SERVICES, INC.
3101 WILSON BOULEVARD
SUITE 900
ARLINGTON, VA 22201

T: 703-682-4900 F: 703.682.4901
www.aecom.com

SEAL AREA

STATE OF MARYLAND
ROGER GUY COURTNEY
NO. 970
REGISTERED LANDSCAPE ARCHITECT

KEY PLAN

REV	DATE	DESCRIPTION	S&R BR.	CUSTOMER	PM	SECT. HEAD

	INITIALS	DATE
DRAWN BY	CC, SW	
CHECKED BY	MA, JP	
A-E MANAGER	EW	
ENVIRONMENTAL BRANCH	JH	
SAFETY BRANCH	CS	
CM	MMD	
PM	RWP	
CUSTOMER	JWB	
ENG. BRANCH	DGL	
LANDSCAPE		

BMP PLANTING ENLARGEMENT PLANS

LP-205

FLIGHT PROJECTS BUILDING

NATIONAL AERONAUTICS AND SPACE ADMINISTRATION

GODDARD SPACE FLIGHT CENTER GREENBELT, MARYLAND
FACILITIES MANAGEMENT DIVISION

DATE ISSUED	CoF CODE OR WR#	AECOM PROJECT NO.	SCALE
10/12/2012	12GXAZ	60187636	1/8" = 1'-0"

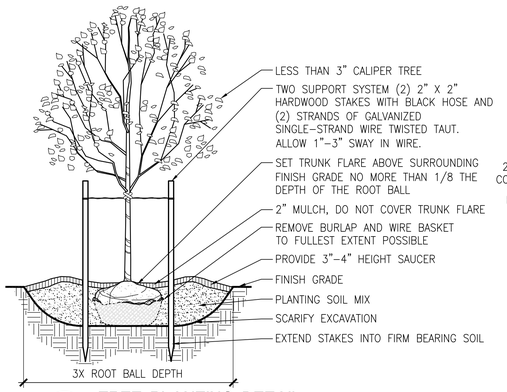

2 TREE PLANTING DETAIL

SCALE: N.T.S. 0-OG-Tree-Staking.dwg

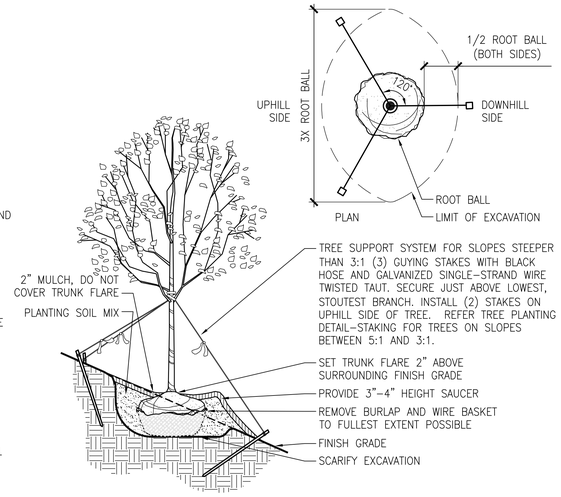

3 TREE PLANTING DETAIL - ON SLOPE

SCALE: N.T.S. 0-OG-Tree-Slope.dwg

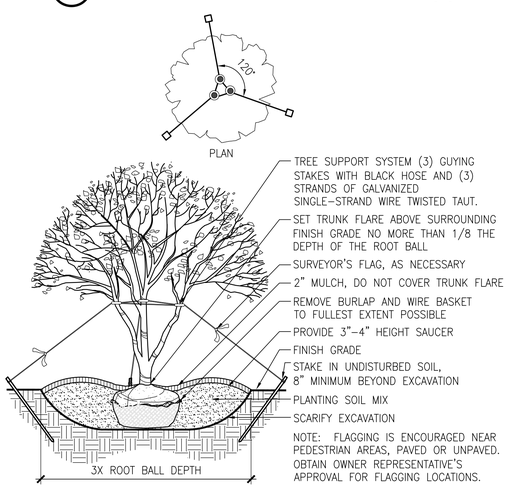

4 MULTI-STEM TREE PLANTING DETAIL

SCALE: N.T.S. 0-OG-Multistem.dwg

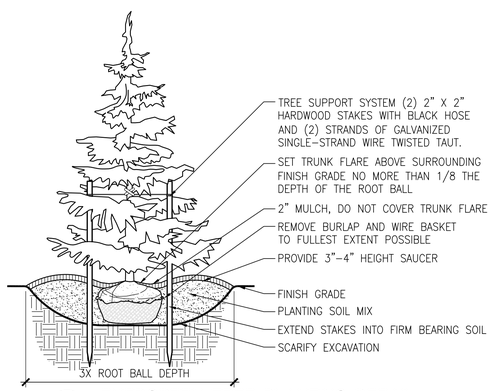

5 EVERGREEN TREE PLANTING DETAIL

SCALE: N.T.S. 0-OG-Evergreen.dwg

KEY	QUANTITY	BOTANICAL NAME	COMMON NAME	SIZE	ROOT BALL	REMARKS
SHADE TREES						
AR	2	Acer rubrum 'Autumn Flame'	Autumn Flame Red Maple	2" cal.	B&B	single leader
AR2	5	Acer rubrum 'Armstrong'	Armstrong Red Maple	3" cal.	B&B	single leader
CL	4	Cladrastis lutea	Kentucky Yellowwood	2" cal.	B&B	multi-stemmed
GT	5	Gleditsia triacanthos var. Inermis	Honeylocust	2" cal.	B&B	single leader
QB	2	Quercus bicolor	Swamp White Oak	2" cal.	B&B	single leader
QM	5	Quercus marilandica	Blackjack Oak	2" cal.	B&B	single leader
QR	1	Quercus rubra	Northern Red Oak	1" cal.	B&B	single leader
QP	5	Quercus phellos	Willow Oak	2" cal.	B&B	single leader
TD	3	Taxodium disticum	Bald Cypress	2" cal.	B&B	single leader
UA	11	Ulmus americana 'Valley Forge'	American Elm	2" cal.	B&B	single leader
ZS	3	Zelkova serrata	Japanese Zelkova	2" cal.	B&B	single leader
UNDERSTORY TREES						
AC	3	Amelanchier arborea	Serviceberry	8' ht.	B&B	multi-stemmed
CA	3	Carpinus caroliniana	American Hornbeam	2" cal.	B&B	multi-stemmed
CC	11	Cercis canadensis	Eastern Redbud	2" cal.	B&B	single-stemmed
CF	9	Cornus florida 'Cloud 9'	Cloud 9 Dogwood	8' ht.	B&B	multi-stemmed
CM	8	Clethra acuminata	Mountainsweet Pepperbush	6' ht.	B&B	multi-stemmed
CP	5	Cornus florida 'Stellar Pink'	Stellar Pink Dogwood	8' ht.	B&B	multi-stemmed
DV	2	Diospyrus virginica	Persimmon	1.5" cal.	B&B	single leader
HV	8	Hamamelis virginiana	Witch Hazel	6' ht.	B&B	multi-stemmed
PS	3	Prunus subhirtella 'Autumnalis'	Autumn Blooming Higan Cherry	2" cal.	B&B	single leader
SA	2	Sassifras albidum	Common Sassafras	6' ht.	B&B	multi-stemmed
EVERGREEN TREES						
CT	1	Chamaecyparis thymoides	Atlantic White Cedar	2" cal.	B&B	multi-stemmed
IF	3	Illicium floridanum	Anise Tree	4' ht.	cont.	full to ground
IN	3	Illex x Nelly R. Stevens	Nelly Stevens Holly	8' ht.	B&B	full to ground
JV	15	Juniperus virginiana	Eastern Redcedar	8' ht.	B&B	full to ground
MV	3	Magnolia virginiana	Sweetbay Magnolia	8' ht.	B&B	multi-stemmed
SHRUBS						
CB	57	Cornus alba 'Elegantissima'	Variegated Redtwig Dogwood	36" ht.	cont.	–
CR	139	Cornus sericea 'Flavirmira'	Yellowtwig Dogwood	36" ht.	cont.	–
DF	61	Fothergilla gardenii	Dwarf Fothergilla	24" ht.	cont.	–
HA	115	Hydrangea macrophylla normalis	Lacecap Hydrangea	36" ht.	cont.	–
IG	91	Ilex glabra 'Shamrock'	Shamrock Holly	24" ht.	cont.	–
IG2	148	Ilex glabra	Inkberry	36" ht.	cont.	–
IVJ	42	Ilex verticillata 'Jim Dandy'	Jim Dandy Winterberry	36" ht.	cont.	–
IVR	293	Ilex verticillata 'Red Sprite'	Red Sprite Winterberry	24" ht.	cont.	–
IVL	8	Itea virginica 'Little Henry'	Little Henry Sweetspire	24" ht.	cont.	–
PL	149	Prunus laurocerasus 'Otto Luyken'	Otto Luyken English Laurel	24" ht.	cont.	–
RM	91	Rhododendron maximum	Rosebay Rhododendron	36" ht.	B&B	–
VD	21	Viburnum dentatum 'Christom'	Blue Muffin Arrowwood Viburnum	36" ht.	cont.	–
PERENNIALS						
aj	476	Ajuga reptans 'Chocolate Chip'	Carpet Bungle	#1	cont.	12" O.C. SPACING
as	403	Asclepias incarnata	Swamp Milkweed	#1	cont.	24" O.C. SPACING
em	245	Eupatorium dubium 'Little Joe'	Dwarf Joe Pye Weed	#3	cont.	36" O.C. SPACING
gm	12	Geranium maculatum	Wild Geranium	#1	cont.	24" O.C. SPACING
hm	553	Heuchera micrantha	Coral Bells	#1	cont.	18" O.C. SPACING
iv	391	Iris versicolor	Sweetflag Iris	#1	cont.	30" O.C. SPACING
je	620	Juncus effusus	Commonrush	#3	cont.	30" O.C. SPACING
pa	289	Polystichum acrostichoides	Christmas Fern	#1	cont.	24" O.C. SPACING
tc	673	Tiarella cordifolia	Foam Flower	#1	cont.	18" O.C. SPACING
GRASSES & SEDGES						
av	404	Andropogon virginicus	Broom Sedge	#3	cont.	30" O.C. SPACING
ca	11	Carex amphibola	Creek Sedge	#3	cont.	24" O.C. SPACING
cl	123	Carex appalachia	Appalachian Sedge	#3	cont.	24" O.C. SPACING
cs	411	Carex stricta	Upright Sedge	#3	cont.	30" O.C. SPACING
ct	103	Chasmanthium latifolium	Northern Sea Oats	#3	cont.	24" O.C. SPACING
mc	66	Muhlenbergia capillaris	Muhly Grass	#3	cont.	24" O.C. SPACING
BULBS						
ac	58	Allium cernuum	Nodding Onion	Top Size	bulb	12" O.C. SPACING
ai	63	Allium schubertii	Ornamental Onion	Top Size	bulb	12" O.C. SPACING
ah	65	Allium christophii	Star of Persia	Top Size	bulb	12" O.C. SPACING
cm	1367	Convallaria majalis	Lily of the Valley	#1	bulb	12" O.C. SPACING
np	314	Narcissus pseudonarcissus	Daffodil	Top Size	bulb	12" O.C. SPACING

1 PLANT SCHEDULE

SCALE: 1" = 1'-0" DT-PLNT SCHEDULE.DWG

100% SUBMITTAL

AECOM
AECOM TECHNICAL SERVICES, INC.
3101 WILSON BOULEVARD
SUITE 900
ARLINGTON, VA 22201
T: 703-682-4900 F: 703.682.4901
www.aecom.com

SEAL AREA

STATE OF MARYLAND
ROGER GUY COURTEMANCHE
NO. 970
REGISTERED LANDSCAPE ARCHITECT

KEY PLAN

REV	DATE	DESCRIPTION	S&R BR.	CUSTOMER	PM	SECT. HEAD

	INITIALS	DATE
DRAWN BY	CC, SW	
CHECKED BY	MA, JP	
A-E MANAGER	EW	
ENVIRONMENTAL BRANCH	JH	
SAFETY BRANCH	CS	
CM	MMD	
PM	RWP	
CUSTOMER	JWB	
ENG. BRANCH	DGL	
LANDSCAPE		

PLANTING SCHEDULE AND DETAILS

LP-501

FLIGHT PROJECTS BUILDING

NATIONAL AERONAUTICS AND SPACE ADMINISTRATION
GODDARD SPACE FLIGHT CENTER GREENBELT, MARYLAND
FACILITIES MANAGEMENT DIVISION

DATE ISSUED	CoF CODE OR WR#	AECOM PROJECT NO.	SCALE
10/12/2012	12GXAZ	60187636	AS SHOWN

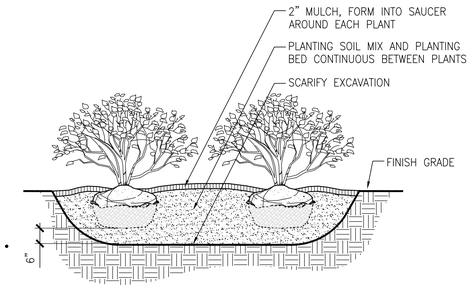

1 SHRUB PLANTING DETAIL

SCALE: N.T.S. 0-0G-Shrubs.dwg

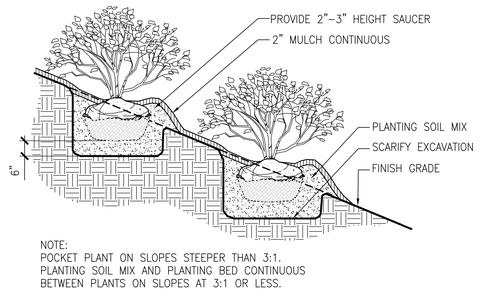

NOTE:
POCKET PLANT ON SLOPES STEEPER THAN 3:1.
PLANTING SOIL MIX AND PLANTING BED CONTINUOUS BETWEEN PLANTS ON SLOPES AT 3:1 OR LESS.

2 SHRUB PLANTING DETAIL - ON SLOPE

SCALE: N.T.S. 0-0G-Shrubs-Slope.dwg

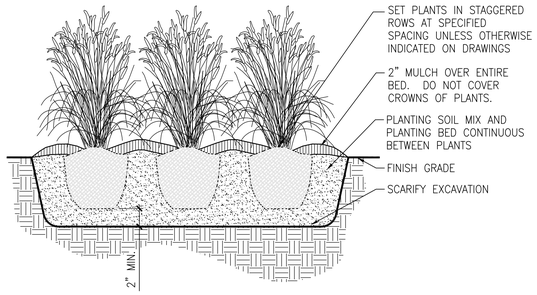

3 PERENNIALS & ORNAMENTAL GRASSES

SCALE: N.T.S. 0-0G-Perennials.dwg

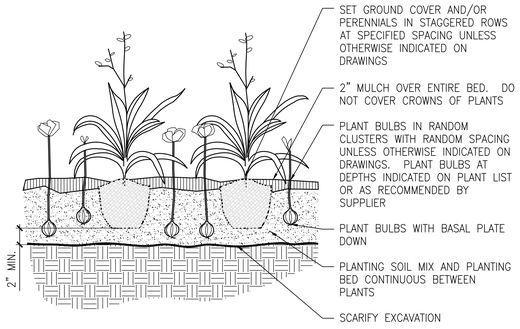

4 INTERPLANTING WITH BULBS DETAIL

SCALE: N.T.S. 0-0G-GC-Bulbs.dwg

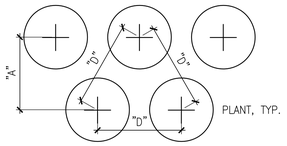

PLANT SPACING "D"	ROW "A"
6" O.C.	5" O.C.
8" O.C.	7" O.C.
10" O.C.	9" O.C.
12" O.C.	10" O.C.
15" O.C.	13" O.C.
18" O.C.	16" O.C.
24" O.C.	20" O.C.
36" O.C.	26" O.C.

NOTE: INSTALL PLANTS WITH TRIANGULAR SPACING UNLESS OTHERWISE INDICATED ON DRAWINGS.

5 PLANT SPACING DETAIL

SCALE: N.T.S. 0-0G-Spacing.dwg

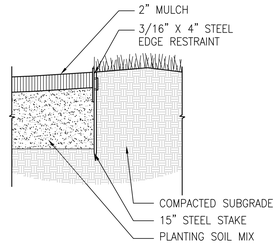

6 STEEL LANDSCAPE EDGING

SCALE: 1-1/2" = 1'-0" 0-0G-STEEL EDGE.DWG

100% SUBMITTAL

AECOM

AECOM TECHNICAL SERVICES, INC.
3101 WILSON BOULEVARD
SUITE 900
ARLINGTON, VA 22201

T: 703-682-4900 F: 703.682.4901
www.aecom.com

SEAL AREA

STATE OF MARYLAND
ROGER GUY COUTEMANCHE
No. 970
REGISTERED LANDSCAPE ARCHITECT

KEY PLAN

REV	DATE	DESCRIPTION	S&R BR.	CUSTOMER	PM	SECT. HEAD

	INITIALS	DATE
DRAWN BY	CC, SW	
CHECKED BY	MA, JP	
A-E MANAGER	EW	
ENVIRONMENTAL BRANCH	JH	
SAFETY BRANCH	CS	
CM	MMD	
PM	RWP	
CUSTOMER	JWB	
ENG. BRANCH	DGL	
LANDSCAPE		

PLANTING DETAILS

LP-502

FLIGHT PROJECTS BUILDING

NATIONAL AERONAUTICS AND SPACE ADMINISTRATION

GODDARD SPACE FLIGHT CENTER GREENBELT, MARYLAND
FACILITIES MANAGEMENT DIVISION

DATE ISSUED	CoF CODE OR WR#	AECOM PROJECT NO.	SCALE
10/12/2012	12GXAZ	60187636	AS SHOWN

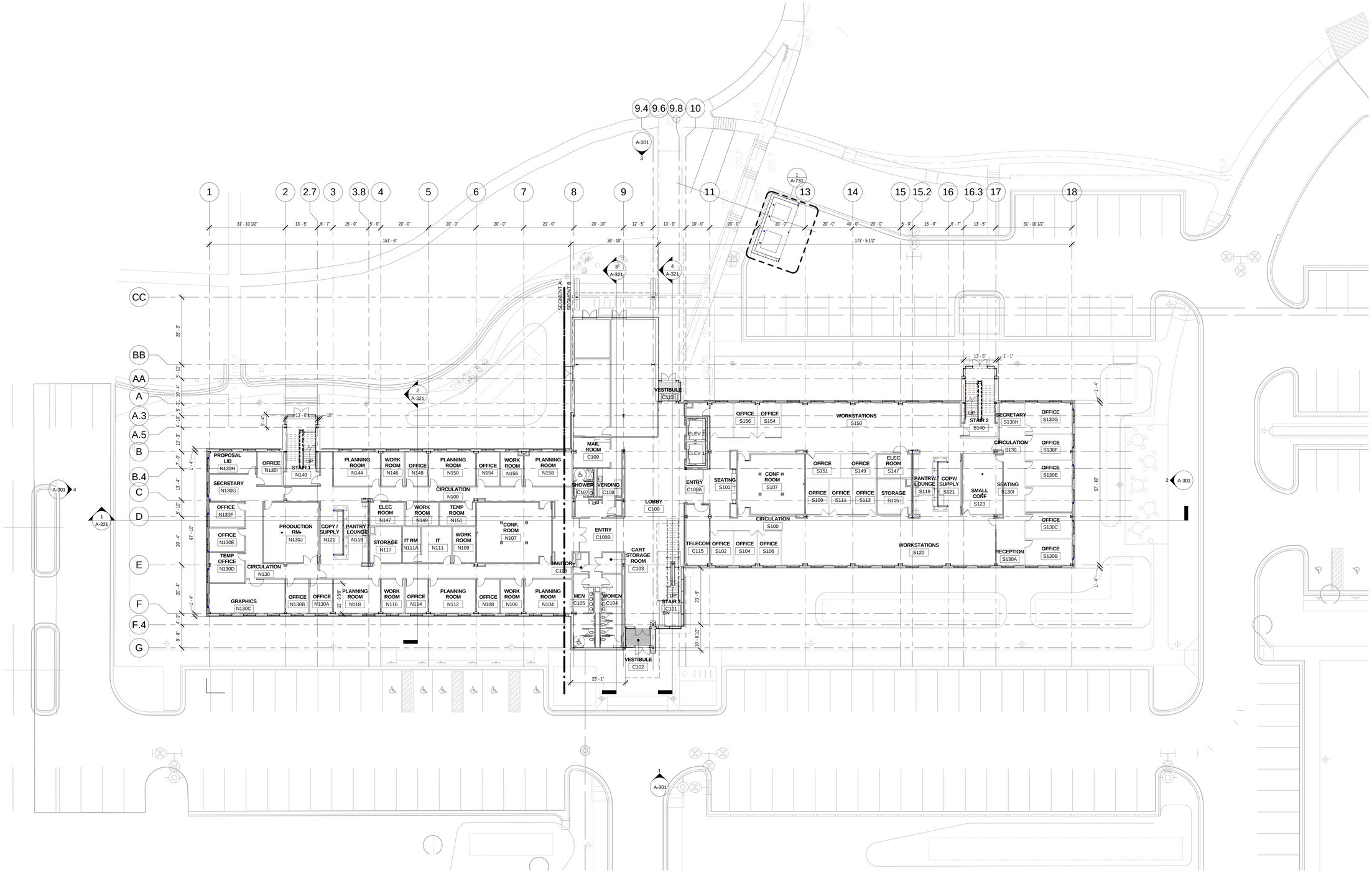

1 LEVEL 1 FLOOR PLAN OVERALL

A-101 REF. A-301 SCALE: 1/16" = 1'-0"

100% SUBMITTAL

NORTH

1/16"=1'-0" 16' 12' 8' 4' 0 16' 32'

AECOM

AECOM TECHNICAL SERVICES, INC.
3101 WILSON BOULEVARD
SUITE 900
ARLINGTON, VA 22201

T: 703-682-4900 F: 703.682.4901
www.aecom.com

SEAL AREA

BOARD OF ARCHITECTURE 10088 REGISTERED ARCHITECT STATE OF MARYLAND

KEY PLAN

REV	DATE	DESCRIPTION	S&R BR.	CUSTOMER	PM	SECT. HEAD

	INITIALS	DATE
DRAWN BY	LA/NS	
CHECKED BY	BW/MW	
A-E MANAGER	EW	
ENVIRONMENTAL BRANCH	JH	
SAFETY BRANCH	CS	
CM	MMD	
PM	RWP	
CUSTOMER	JWB	
ENG. BRANCH	DGL	
ARCHITECTURE		

LEVEL 1 - FLOOR PLAN OVERALL

A-101

FLIGHT PROJECTS BUILDING

NATIONAL AERONAUTICS AND SPACE ADMINISTRATION

GODDARD SPACE FLIGHT CENTER GREENBELT, MARYLAND
FACILITIES MANAGEMENT DIVISION

DATE ISSUED	CoF CODE OR WR#	AECOM PROJECT NO.	SCALE
10/12/2012	12GXAZ	60187636	1/16" = 1'-0"

FILE DATE: 10/11/2012 3:48:58 PM

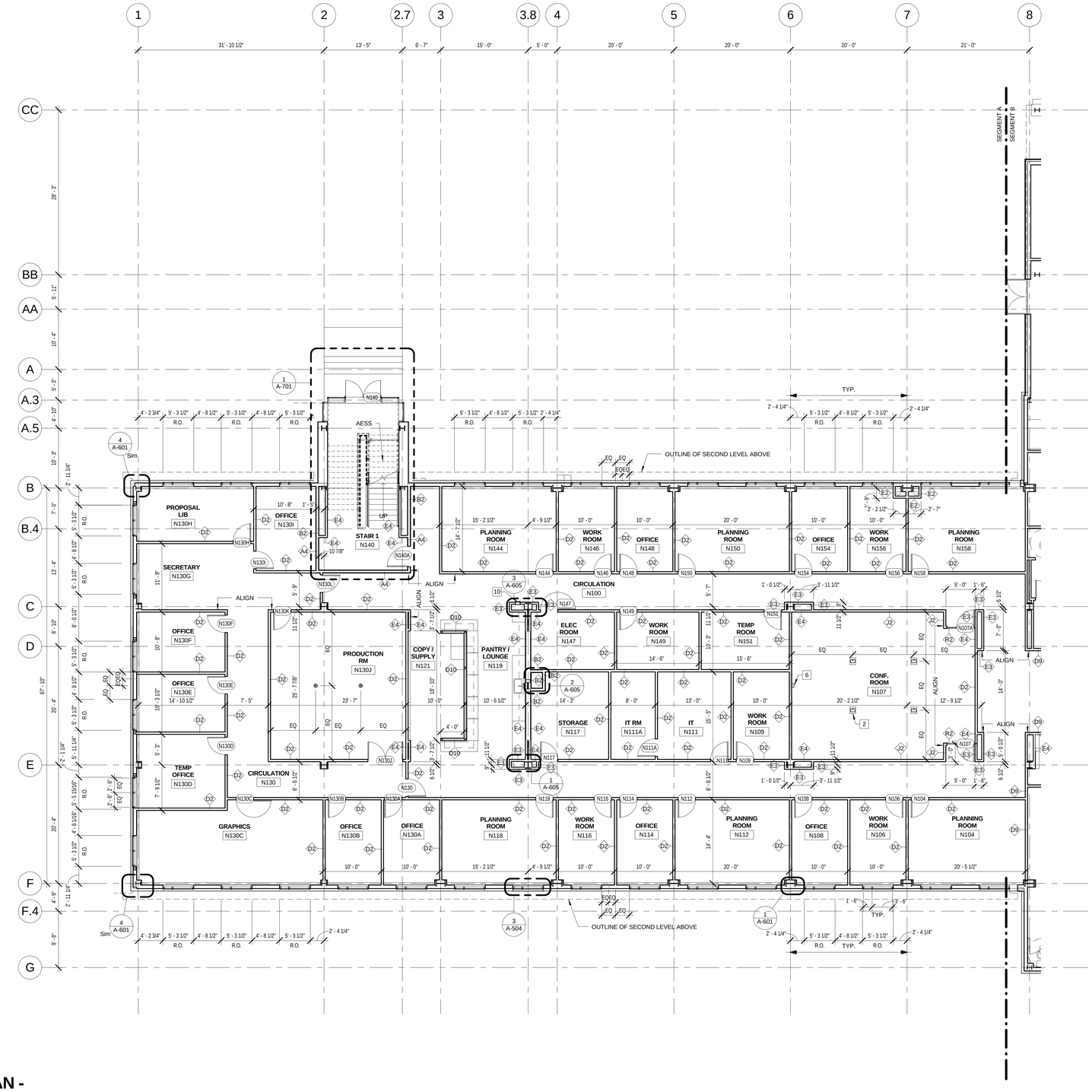

FLOOR PLAN GENERAL NOTES:

1. ALL WORK SHALL CONFORM TO ALL APPLICABLE CODES, REGULATIONS AND REQUIREMENTS OF ALL GOVERNING AUTHORITIES. REFER TO THE GENERAL NOTES SHEETS FOR APPLICABLE CODES.
2. REFER TO SHEET LS-010 SERIES FOR LIFE SAFETY FIRE SEPARATION, OCCUPANT LOAD, EXIT CAPACITY, FIRE EXTINGUISHER LOCATIONS AND EGRESS PLAN.
3. REFER TO SHEET A-801 & 802 FOR PARTITION TYPES.
4. REFER TO STRUCTURAL DRAWINGS FOR LOCATION AND SIZE OF STRUCTURAL ELEMENTS.
5. REFER TO MECHANICAL DRAWINGS FOR ALL PENETRATIONS AND INSTALL FIRESTOPS AS REQUIRED TO MAINTAIN FIRE RATING.
6. ALL DIMENSIONS SHALL BE VERIFIED WITH FIELD CONDITIONS. THE G.C. SHALL INFORM THE CLIENT BEFORE PROCEEDING WITH ANY DIMENSIONAL MODIFICATION DUE TO FIELD CONDITIONS.
7. MANUFACTURER'S OR VENDOR'S NAMEPLATE, TRADEMARKS, LOGOS OR OTHER IDENTIFICATIONS SHALL NOT BE VISIBLE WITHIN ANY PUBLIC OR TENANT AREA OF THE PROJECT. EXCEPTED ARE REQUIRED LABELS FROM TESTING AGENCIES OR MARKINGS REQUIRED BY CODE OR GOVERNING AUTHORITY.
8. ALL INTERIOR DIMENSIONS ARE TO FACE OF UNFINISHED GYPSUM BOARD UNLESS NOTED OTHERWISE.
9. ALL INTERIOR DOOR DIMENSIONS NOTED ON FLOOR PLAN ARE TO DOOR OPENING. IF NO DIMENSION IS NOTED ON FLOOR PLAN, REFER TO SHEET A-946 FOR TYPICAL DOOR LOCATION.
10. REFER TO A-900 SERIES SHEETS FOR ADDITIONAL FINISHES AND FINISH INSTALLATIONS.
11. G.C. TO PROVIDE LEVELING COMPOUND AT ALL LOCATIONS WHERE GLASS DOORS ARE LOCATED.
12. PARTITIONS ALONG COLUMN LINES TO BE CENTERED ON COLUMN LINE, UNLESS NOTED OTHERWISE.
13. CURTAIN WALL DIMENSIONS ARE TYPICALLY TO CENTER OF MULLION.

FLOOR PLAN KEYNOTES:

1.	POKE-THRU FLOOR BOXES. REFER TO A-102a & A-102b FOR TYPICAL LOCATIONS.
2.	FLOOR BOXES. REFER TO A-102a & A-102b FOR TYPICAL LOCATIONS.
3.	TWO HD CAMERA, WALL MOUNTED, CENTERED BETWEEN THE PROJECTION SCREEN AT 5'-6" AND 6'-4" ABOVE AFF.
4.	ONE HD CAMERA, BRACKET MOUNTED, 1'-0" FROM THE COLUMN LINE BB AT 6'-8" ABOVE AFF.
5.	TWO HD CAMERA, WALL MOUNTED, CENTERED BETWEEN THE PROJECTION SCREEN AT 5'-10 1/2" AND 4'-8" ABOVE AFF.
6.	ONE HD CAMERA, WALL MOUNTED, CENTERED BETWEEN THE PROJECTION SCREEN AT 5'-6" ABOVE AFF.
7.	DOOR ACTUATOR, SURFACE WALL MOUNTED, 4'-0" ABOVE AFF.
8.	CARD READER, SURFACE WALL MOUNTED, 4'-0" ABOVE AFF.
9.	TELEPHONE, RECESSED WALL MOUNTED, 4'-0" ABOVE AFF.
10	SEMI RECESSED FIRE EXTINGUISHER CABINET.
11	CORNER GUARDS

1 LEVEL 1 FLOOR PLAN - SEGMENT A

A-101a | REF. A-301 | SCALE: 1/8" = 1'-0"

100% SUBMITTAL

NORTH

1/8"=1'-0" 8' 4' 0 8' 16'

AECOM

AECOM TECHNICAL SERVICES, INC.
3101 WILSON BOULEVARD
SUITE 900
ARLINGTON, VA 22201

T: 703-682-4900 F: 703.682.4901
www.aecom.com

SEAL AREA

BOARD OF ARCHITECTS
10054
ELIZABETH WILSON
STATE OF MARYLAND

KEY PLAN

SEGMENT - A

REV	DATE	DESCRIPTION	S&B BR.	CUSTOMER	PM	SECT. HEAD

	INITIALS	DATE
DRAWN BY	LA/NS	
CHECKED BY	BW/MW	
A-E MANAGER	EW	
ENVIRONMENTAL BRANCH	JH	
SAFETY BRANCH	CS	
CM	MMD	
PM	RWP	
CUSTOMER	JWB	
ENG. BRANCH	DGL	
ARCHITECTURE		

LEVEL 1 - FLOOR PLAN SEGMENT A

A-101a

FLIGHT PROJECTS BUILDING

NATIONAL AERONAUTICS AND SPACE ADMINISTRATION

GODDARD SPACE FLIGHT CENTER GREENBELT, MARYLAND
FACILITIES MANAGEMENT DIVISION

DATE ISSUED	CoF CODE OR W/R#	AECOM PROJECT NO.	SCALE
10/12/2012	12GXAZ	60187636	1/8" = 1'-0"

FILE DATE: 10/11/2012 3:49:13 PM

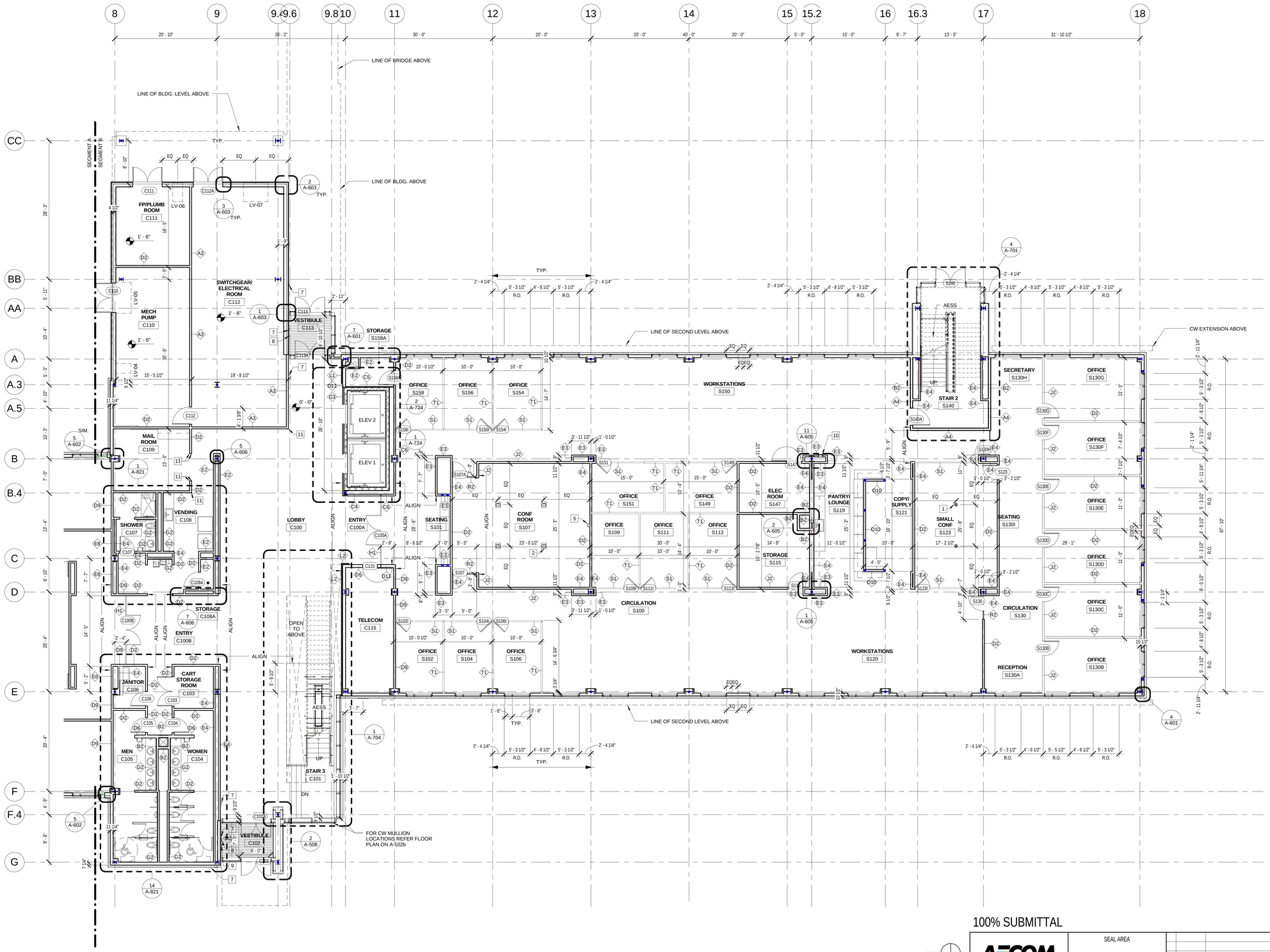

FLOOR PLAN GENERAL NOTES:

1. ALL WORK SHALL CONFORM TO ALL APPLICABLE CODES, REGULATIONS AND REQUIREMENTS OF ALL GOVERNING AUTHORITIES. REFER TO THE GENERAL NOTES SHEETS FOR APPLICABLE CODES.
2. REFER TO SHEET LS-010 SERIES FOR LIFE SAFETY FIRE SEPARATION, OCCUPANT LOAD, EXIT CAPACITY, FIRE EXTINGUISHER LOCATIONS AND EGRESS PLAN.
3. REFER TO SHEET A-801 & 802 FOR PARTITION TYPES.
4. REFER TO STRUCTURAL DRAWINGS FOR LOCATION AND SIZE OF STRUCTURAL ELEMENTS.
5. REFER TO MECHANICAL DRAWINGS FOR ALL PENETRATIONS AND INSTALL FIRESTOPS AS REQUIRED TO MAINTAIN FIRE RATING.
6. ALL DIMENSIONS SHALL BE VERIFIED WITH FIELD CONDITIONS. THE G.C. SHALL INFORM THE CLIENT BEFORE PROCEEDING WITH ANY DIMENSIONAL MODIFICATION DUE TO FIELD CONDITIONS.
7. MANUFACTURER'S OR VENDOR'S NAMEPLATE, TRADEMARKS, LOGOS OR OTHER IDENTIFICATIONS SHALL NOT BE VISIBLE WITHIN ANY PUBLIC OR TENANT AREA OF THE PROJECT. EXCEPTED ARE REQUIRED LABELS FROM TESTING AGENCIES OR MARKINGS REQUIRED BY CODE OR GOVERNING AUTHORITY.
8. ALL INTERIOR DIMENSIONS ARE TO FACE OF UNFINISHED GYPSUM BOARD UNLESS NOTED OTHERWISE.
9. ALL INTERIOR DOOR DIMENSIONS NOTED ON FLOOR PLAN ARE TO DOOR OPENING. IF NO DIMENSION IS NOTED ON FLOOR PLAN, REFER TO SHEET A-946 FOR TYPICAL DOOR LOCATION.
10. REFER TO A-900 SERIES SHEETS FOR ADDITIONAL FINISHES AND FINISH INSTALLATIONS.
11. G.C. TO PROVIDE LEVELING COMPOUND AT ALL LOCATIONS WHERE GLASS DOORS ARE LOCATED.
12. PARTITIONS ALONG COLUMN LINES TO BE CENTERED ON COLUMN LINE, UNLESS NOTED OTHERWISE.
13. CURTAIN WALL DIMENSIONS ARE TYPICALLY TO CENTER OF MULLION.

FLOOR PLAN KEYNOTES:

1. POKE-THRU FLOOR BOXES. REFER TO A-102a & A-102b FOR TYPICAL LOCATIONS.
2. FLOOR BOXES. REFER TO A-102a & A-102b FOR TYPICAL LOCATIONS.
3. TWO HD CAMERA, WALL MOUNTED, CENTERED BETWEEN THE PROJECTION SCREEN AT 5'-6" AND 6'-4" ABOVE AFF.
4. ONE HD CAMERA, BRACKET MOUNTED, 1'-0" FROM THE COLUMN LINE BB AT 6'-8" ABOVE AFF.
5. TWO HD CAMERA, WALL MOUNTED, CENTERED BETWEEN THE PROJECTION SCREEN AT 5'-10 1/2" AND 4'-8" ABOVE AFF.
6. ONE HD CAMERA, WALL MOUNTED, CENTERED BETWEEN THE PROJECTION SCREEN AT 5'-6" ABOVE AFF.
7. DOOR ACTUATOR, SURFACE WALL MOUNTED, 4'-0" ABOVE AFF.
8. CARD READER, SURFACE WALL MOUNTED, 4'-0" ABOVE AFF.
9. TELEPHONE, RECESSED WALL MOUNTED, 4'-0" ABOVE AFF.
10. SEMI RECESSED FIRE EXTINGUISHER CABINET.
11. CORNER GUARDS

1 LEVEL 1 FLOOR PLAN - SEGMENT B

A-101b REF. A-301 SCALE: 1/8" = 1'-0"

NORTH

1/8"=1'-0" 8' 4' 0 8' 16'

100% SUBMITTAL

AECOM
AECOM TECHNICAL SERVICES, INC.
3101 WILSON BOULEVARD
SUITE 900
ARLINGTON, VA 22201
T: 703-682-4900 F: 703.682.4901
www.aecom.com

SEAL AREA

STATE OF MARYLAND BOARD OF ARCHITECTS REGISTERED ARCHITECT 10 0594

KEY PLAN

SEGMENT - B

REV	DATE	DESCRIPTION	S&R BR.	CUSTOMER	PM	SECT. HEAD

	INITIALS	DATE
DRAWN BY	LA/NS	
CHECKED BY	MW/BW	
A-E MANAGER	EW	
ENVIRONMENTAL BRANCH	JH	
SAFETY BRANCH	CS	
CM	MMD	
PM	RWP	
CUSTOMER	JWB	
ENG. BRANCH	DGL	
ARCHITECTURE		

LEVEL 1 - FLOOR PLAN SEGMENT B

A-101b

FLIGHT PROJECTS BUILDING

NATIONAL AERONAUTICS AND SPACE ADMINISTRATION

GODDARD SPACE FLIGHT CENTER GREENBELT, MARYLAND
FACILITIES MANAGEMENT DIVISION

DATE ISSUED	CoF CODE OR WR#	AECOM PROJECT NO.	SCALE
10/12/2012	12GXAZ	60187636	1/8" = 1'-0"

FILE DATE: 10/11/2012 3:49:27 PM

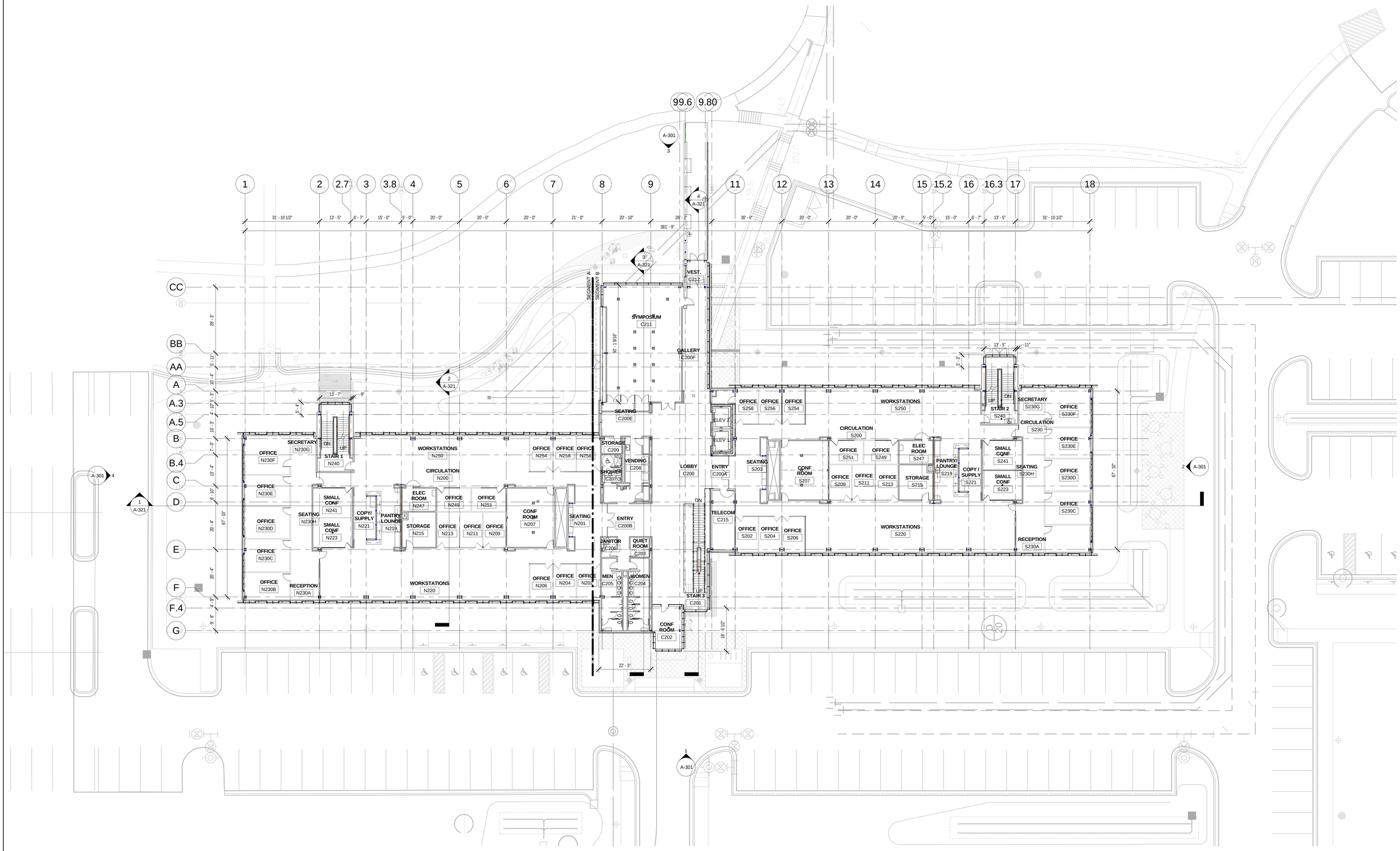

1 LEVEL 2 FLOOR PLAN

A-102 REF. A-301 SCALE: 1/16" = 1'-0"

NORTH

1/16"=1'-0" 16' 12' 8' 4' 0 16' 32'

100% SUBMITTAL

AECOM

AECOM TECHNICAL SERVICES, INC.
3101 WILSON BOULEVARD
SUITE 900
ARLINGTON, VA 22201

T: 703-682-4900 F: 703.682.4901
www.aecom.com

SEAL AREA

BOARD OF ARCHITECTS
REGISTERED ARCHITECT
STATE OF MARYLAND

KEY PLAN

REV	DATE	DESCRIPTION	S&R BR.	CUSTOMER	PM	SECT. HEAD

	INITIALS	DATE
DRAWN BY	LA/NS	
CHECKED BY	MW/BW	
A-E MANAGER	EW	
ENVIRONMENTAL BRANCH	JH	
SAFETY BRANCH	CS	
CM	MMD	
PM	RWP	
CUSTOMER	JWB	
ENG. BRANCH	DGL	
ARCHITECTURE		

LEVEL 2 - FLOOR PLAN OVERALL

A-102

FLIGHT PROJECTS BUILDING

NATIONAL AERONAUTICS AND SPACE ADMINISTRATION

GODDARD SPACE FLIGHT CENTER GREENBELT, MARYLAND
FACILITIES MANAGEMENT DIVISION

DATE ISSUED	CoF CODE OR WR#	AECOM PROJECT NO.	SCALE
10/12/2012	12GXAZ	60187636	1/16" = 1'-0"

FILE DATE: 10/11/2012 3:50:05 PM

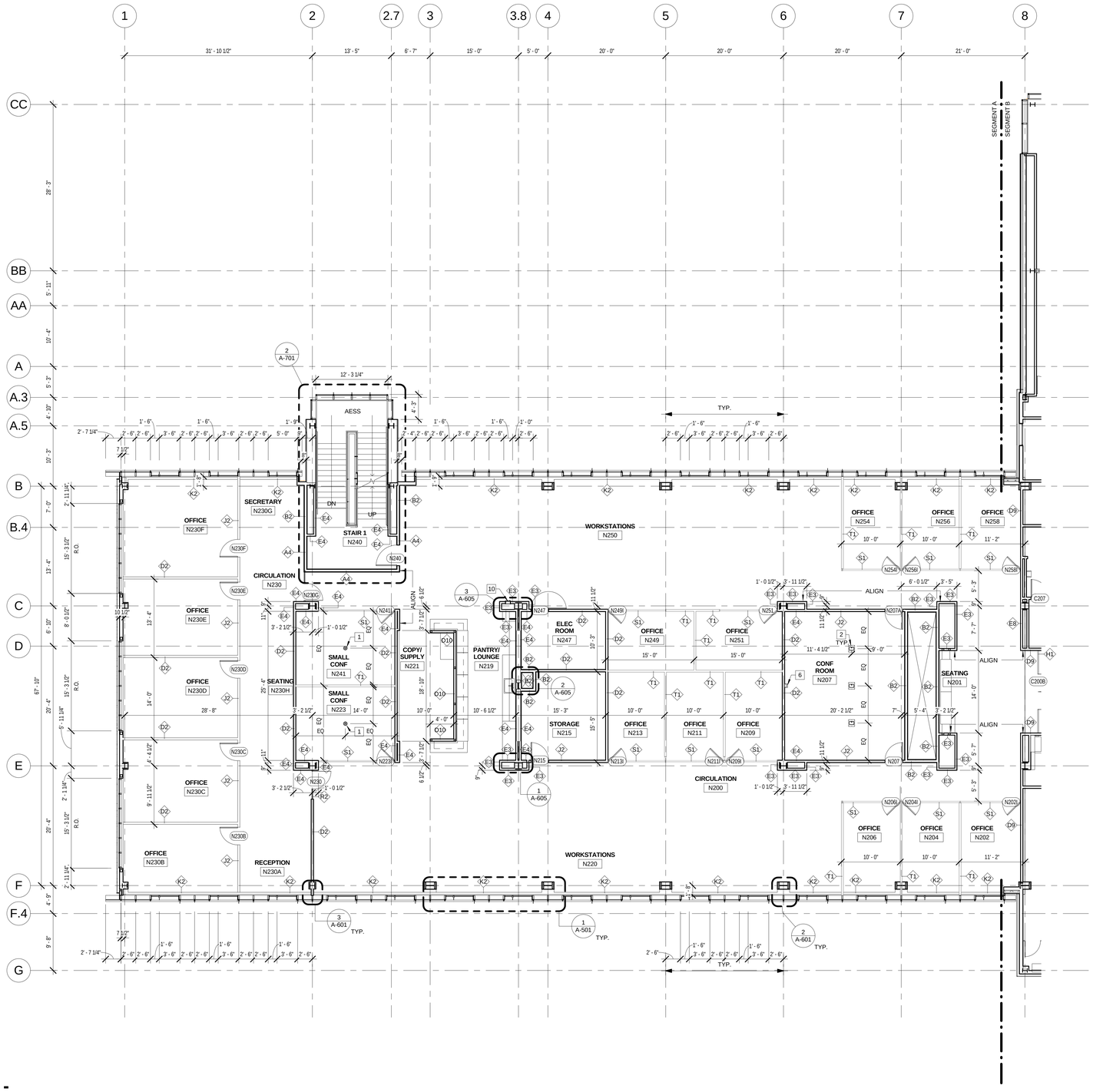

FLOOR PLAN GENERAL NOTES:

1. ALL WORK SHALL CONFORM TO ALL APPLICABLE CODES, REGULATIONS AND REQUIREMENTS OF ALL GOVERNING AUTHORITIES. REFER TO THE GENERAL NOTES SHEETS FOR APPLICABLE CODES.
2. REFER TO SHEET LS-010 SERIES FOR LIFE SAFETY FIRE SEPARATION, OCCUPANT LOAD, EXIT CAPACITY, FIRE EXTINGUISHER LOCATIONS AND EGRESS PLAN.
3. REFER TO SHEET A-801 & 802 FOR PARTITION TYPES.
4. REFER TO STRUCTURAL DRAWINGS FOR LOCATION AND SIZE OF STRUCTURAL ELEMENTS.
5. REFER TO MECHANICAL DRAWINGS FOR ALL PENETRATIONS AND INSTALL FIRESTOPS AS REQUIRED TO MAINTAIN FIRE RATING.
6. ALL DIMENSIONS SHALL BE VERIFIED WITH FIELD CONDITIONS. THE G.C. SHALL INFORM THE CLIENT BEFORE PROCEEDING WITH ANY DIMENSIONAL MODIFICATION DUE TO FIELD CONDITIONS.
7. MANUFACTURER'S OR VENDOR'S NAMEPLATE, TRADEMARKS, LOGOS OR OTHER IDENTIFICATIONS SHALL NOT BE VISIBLE WITHIN ANY PUBLIC OR TENANT AREA OF THE PROJECT. EXCEPTED ARE REQUIRED LABELS FROM TESTING AGENCIES OR MARKINGS REQUIRED BY CODE OR GOVERNING AUTHORITY.
8. ALL INTERIOR DIMENSIONS ARE TO FACE OF UNFINISHED GYPSUM BOARD UNLESS NOTED OTHERWISE.
9. ALL INTERIOR DOOR DIMENSIONS NOTED ON FLOOR PLAN ARE TO DOOR OPENING. IF NO DIMENSION IS NOTED ON FLOOR PLAN, REFER TO SHEET A-946 FOR TYPICAL DOOR LOCATION.
10. REFER TO A-900 SERIES SHEETS FOR ADDITIONAL FINISHES AND FINISH INSTALLATIONS.
11. G.C. TO PROVIDE LEVELING COMPOUND AT ALL LOCATIONS WHERE GLASS DOORS ARE LOCATED.
12. PARTITIONS ALONG COLUMN LINES TO BE CENTERED ON COLUMN LINE, UNLESS NOTED OTHERWISE.
13. CURTAIN WALL DIMENSIONS ARE TYPICALLY TO CENTER OF MULLION.

FLOOR PLAN KEYNOTES:

1.	POKE-THRU FLOOR BOXES. REFER TO A-102a & A-102b FOR TYPICAL LOCATIONS.
2.	FLOOR BOXES. REFER TO A-102a & A-102b FOR TYPICAL LOCATIONS.
3.	TWO HD CAMERA, WALL MOUNTED, CENTERED BETWEEN THE PROJECTION SCREEN AT 5'-6" AND 6'-4" ABOVE AFF.
4.	ONE HD CAMERA, BRACKET MOUNTED, 1'-0" FROM THE COLUMN LINE BB AT 6'-8" ABOVE AFF.
5.	TWO HD CAMERA, WALL MOUNTED, CENTERED BETWEEN THE PROJECTION SCREEN AT 5'-10 1/2" AND 4'-8" ABOVE AFF.
6.	ONE HD CAMERA, WALL MOUNTED, CENTERED BETWEEN THE PROJECTION SCREEN AT 5'-6" ABOVE AFF.
7.	DOOR ACTUATOR, SURFACE WALL MOUNTED, 4'-0" ABOVE AFF.
8.	CARD READER, SURFACE WALL MOUNTED, 4'-0" ABOVE AFF.
9.	TELEPHONE, RECESSED WALL MOUNTED, 4'-0" ABOVE AFF.
10	SEMI RECESSED FIRE EXTINGUISHER CABINET.
11	CORNER GUARDS

1 LEVEL 2 FLOOR PLAN - SEGMENT A

A-102a REF. A-301 SCALE: 1/8" = 1'-0"

100% SUBMITTAL

NORTH

1/8"=1'-0" 8' 4' 0 8' 16'

AECOM

AECOM TECHNICAL SERVICES, INC.
3101 WILSON BOULEVARD
SUITE 900
ARLINGTON, VA 22201

T: 703-682-4900 F: 703.682.4901
www.aecom.com

SEAL AREA

BOARD OF ARCHITECTS 10394 REGISTERED ARCHITECT STATE OF MARYLAND

KEY PLAN

SEGMENT - A

REV	DATE	DESCRIPTION	S&R BR.	CUSTOMER	PM	SECT. HEAD

	INITIALS	DATE
DRAWN BY	LA/NS	
CHECKED BY	MW/BW	
A-E MANAGER	EW	
ENVIRONMENTAL BRANCH	JH	
SAFETY BRANCH	CS	
CM	MMD	
PM	RWP	
CUSTOMER	JWB	
ENG. BRANCH	DGL	
ARCHITECTURE		

LEVEL 2 - FLOOR PLAN
SEGMENT A

A-102a

FLIGHT PROJECTS BUILDING

NATIONAL AERONAUTICS AND SPACE ADMINISTRATION

GODDARD SPACE FLIGHT CENTER GREENBELT, MARYLAND
FACILITIES MANAGEMENT DIVISION

DATE ISSUED	CoF CODE OR WR#	AECOM PROJECT NO.	SCALE
10/12/2012	12GXAZ	60187636	1/8" = 1'-0"

FILE DATE: 10/11/2012 3:50:23 PM

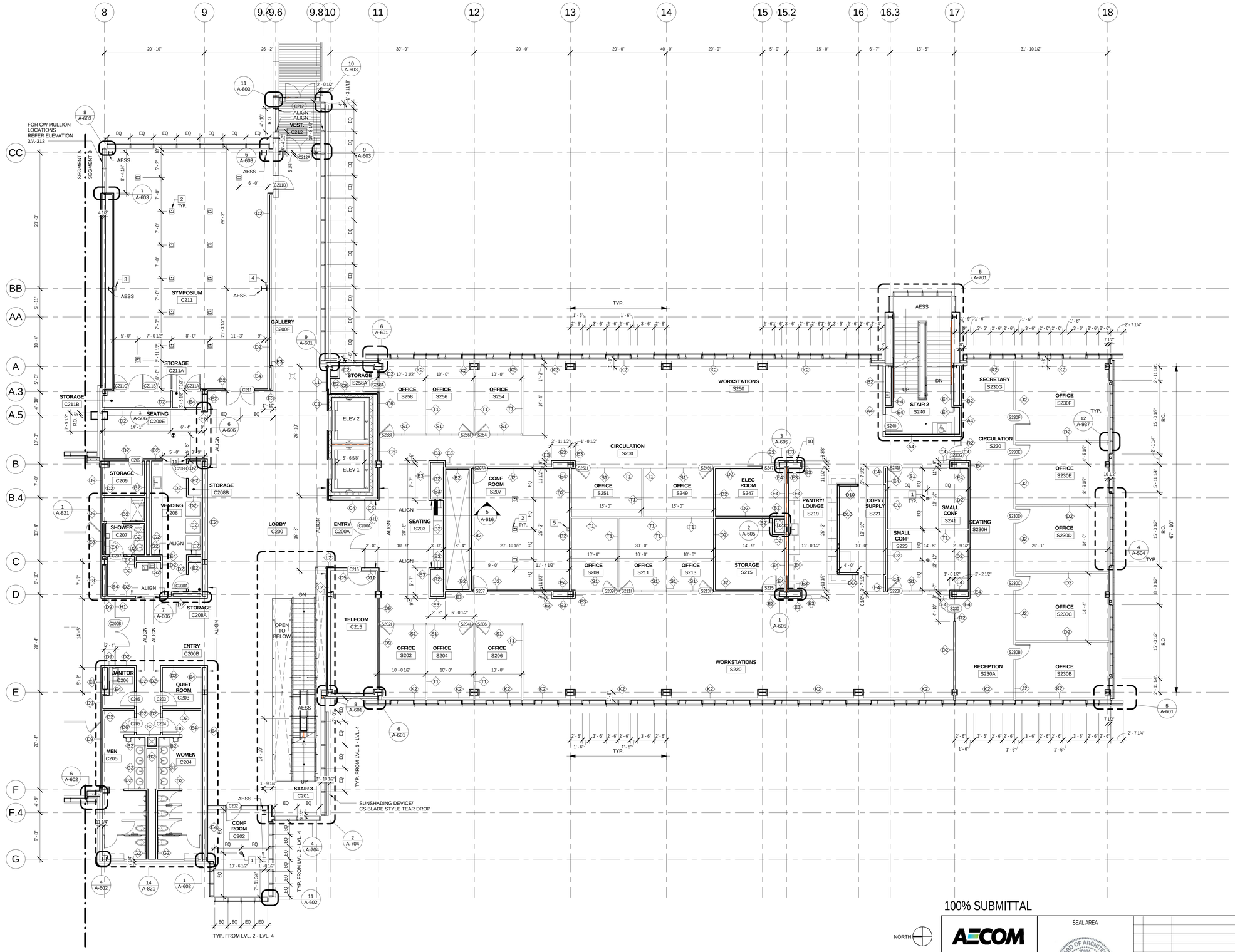

FLOOR PLAN GENERAL NOTES:

1. ALL WORK SHALL CONFORM TO ALL APPLICABLE CODES, REGULATIONS AND REQUIREMENTS OF ALL GOVERNING AUTHORITIES. REFER TO THE GENERAL NOTES SHEETS FOR APPLICABLE CODES.
2. REFER TO SHEET LS-010 SERIES FOR LIFE SAFETY FIRE SEPARATION, OCCUPANT LOAD, EXIT CAPACITY, FIRE EXTINGUISHER LOCATIONS AND EGRESS PLAN.
3. REFER TO SHEET A-801 & 802 FOR PARTITION TYPES.
4. REFER TO STRUCTURAL DRAWINGS FOR LOCATION AND SIZE OF STRUCTURAL ELEMENTS.
5. REFER TO MECHANICAL DRAWINGS FOR ALL PENETRATIONS AND INSTALL FIRESTOPS AS REQUIRED TO MAINTAIN FIRE RATING.
6. ALL DIMENSIONS SHALL BE VERIFIED WITH FIELD CONDITIONS. THE G.C. SHALL INFORM THE CLIENT BEFORE PROCEEDING WITH ANY DIMENSIONAL MODIFICATION DUE TO FIELD CONDITIONS.
7. MANUFACTURER'S OR VENDOR'S NAMEPLATE, TRADEMARKS, LOGOS OR OTHER IDENTIFICATIONS SHALL NOT BE VISIBLE WITHIN ANY PUBLIC OR TENANT AREA OF THE PROJECT. EXCEPTED ARE REQUIRED LABELS FROM TESTING AGENCIES OR MARKINGS REQUIRED BY CODE OR GOVERNING AUTHORITY.
8. ALL INTERIOR DIMENSIONS ARE TO FACE OF UNFINISHED GYPSUM BOARD UNLESS NOTED OTHERWISE.
9. ALL INTERIOR DOOR DIMENSIONS NOTED ON FLOOR PLAN ARE TO DOOR OPENING. IF NO DIMENSION IS NOTED ON FLOOR PLAN, REFER TO SHEET A-946 FOR TYPICAL DOOR LOCATION.
10. REFER TO A-900 SERIES SHEETS FOR ADDITIONAL FINISHES AND FINISH INSTALLATIONS.
11. G.C. TO PROVIDE LEVELING COMPOUND AT ALL LOCATIONS WHERE GLASS DOORS ARE LOCATED.
12. PARTITIONS ALONG COLUMN LINES TO BE CENTERED ON COLUMN LINE, UNLESS NOTED OTHERWISE.
13. CURTAIN WALL DIMENSIONS ARE TYPICALLY TO CENTER OF MULLION.

FLOOR PLAN KEYNOTES:

1. POKE-THRU FLOOR BOXES. REFER TO A-102a & A-102b FOR TYPICAL LOCATIONS.
2. FLOOR BOXES. REFER TO A-102a & A-102b FOR TYPICAL LOCATIONS.
3. TWO HD CAMERA, WALL MOUNTED, CENTERED BETWEEN THE PROJECTION SCREEN AT 5'-6" AND 6'-4" ABOVE AFF.
4. ONE HD CAMERA, BRACKET MOUNTED, 1'-0" FROM THE COLUMN LINE BB AT 6'-8" ABOVE AFF.
5. TWO HD CAMERA, WALL MOUNTED, CENTERED BETWEEN THE PROJECTION SCREEN AT 5'-10 1/2" AND 4'-8" ABOVE AFF.
6. ONE HD CAMERA, WALL MOUNTED, CENTERED BETWEEN THE PROJECTION SCREEN AT 5'-6" ABOVE AFF.
7. DOOR ACTUATOR, SURFACE WALL MOUNTED, 4'-0" ABOVE AFF.
8. CARD READER, SURFACE WALL MOUNTED, 4'-0" ABOVE AFF.
9. TELEPHONE, RECESSED WALL MOUNTED, 4'-0" ABOVE AFF.
10. SEMI RECESSED FIRE EXTINGUISHER CABINET.
11. CORNER GUARDS

1 LEVEL 2 FLOOR PLAN - SEGMENT B

A-102b REF. A-301 SCALE: 1/8" = 1'-0"

NORTH

1/8"=1'-0" 8' 4' 0 8' 16'

100% SUBMITTAL

AECOM
AECOM TECHNICAL SERVICES, INC.
3101 WILSON BOULEVARD
SUITE 900
ARLINGTON, VA 22201
T: 703-682-4900 F: 703.682.4901
www.aecom.com

SEAL AREA

BOARD OF ARCHITECTS 10094 ERNEST L. WARNER REGISTERED ARCHITECT STATE OF MARYLAND

KEY PLAN

SEGMENT - B

REV	DATE	DESCRIPTION	S&R BR.	CUSTOMER	PM	SECT. HEAD

	INITIALS	DATE
DRAWN BY	LA/NS	
CHECKED BY	MM/BW	
A-E MANAGER	EW	
ENVIRONMENTAL BRANCH	JH	
SAFETY BRANCH	CS	
CM	MMD	
PM	RWP	
CUSTOMER	JWB	
ENG. BRANCH	DGL	
ARCHITECTURE		

LEVEL 2 - FLOOR PLAN SEGMENT B

A-102b

FLIGHT PROJECTS BUILDING

NATIONAL AERONAUTICS AND SPACE ADMINISTRATION

GODDARD SPACE FLIGHT CENTER GREENBELT, MARYLAND
FACILITIES MANAGEMENT DIVISION

DATE ISSUED	CoF CODE OR WR#	AECOM PROJECT NO.	SCALE
10/12/2012	12GXAZ	60187636	1/8" = 1'-0"

FILE DATE: 10/11/2012 3:50:41 PM

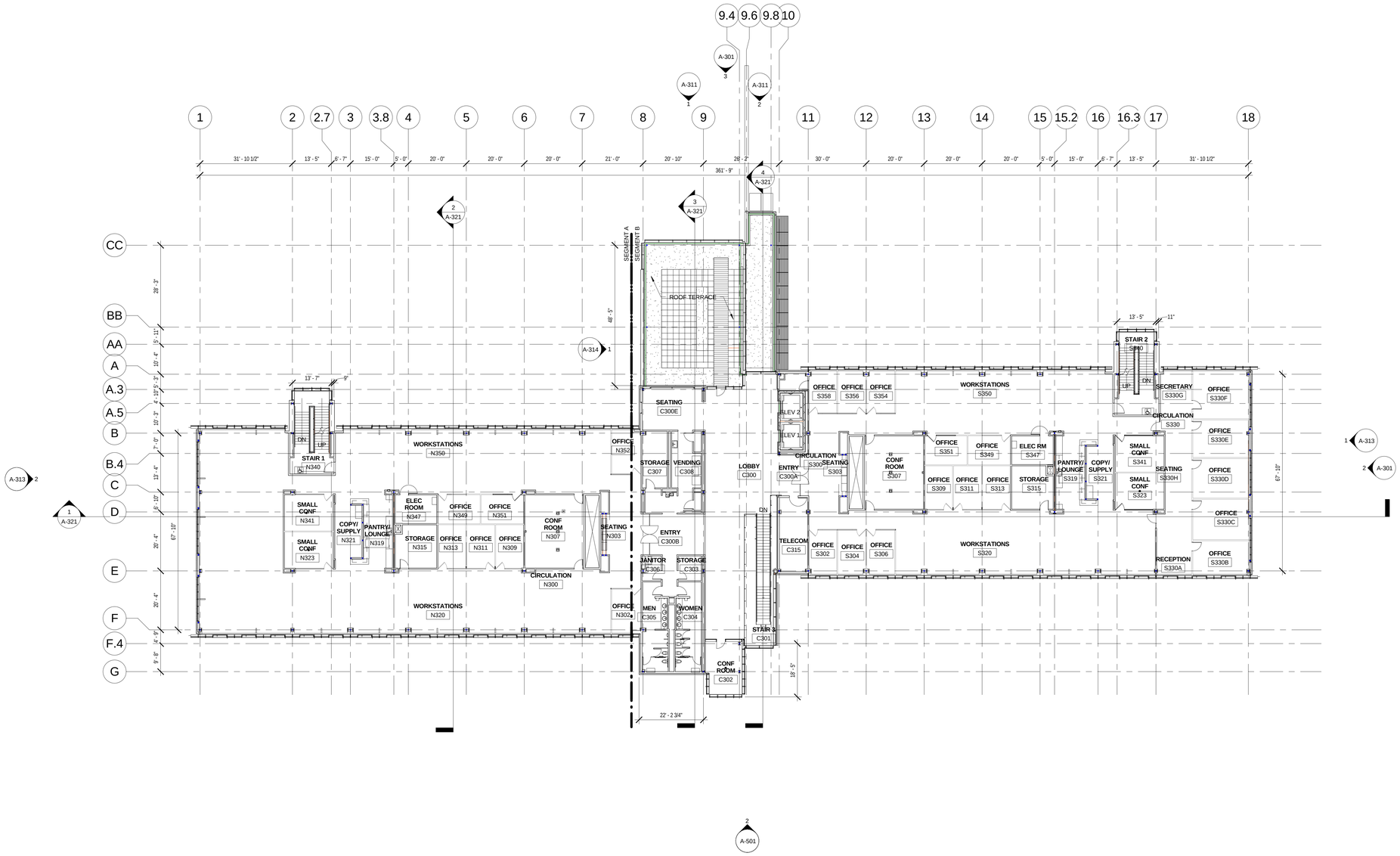

1 LEVEL 3 FLOOR PLAN

A-103 REF. A-301 SCALE: 1/16" = 1'-0"

100% SUBMITTAL

NORTH

1/16"=1'-0" 16' 12' 8' 4' 0 16' 32'

AECOM

AECOM TECHNICAL SERVICES, INC.
3101 WILSON BOULEVARD
SUITE 900
ARLINGTON, VA 22201

T: 703-682-4900 F: 703.682.4901
www.aecom.com

SEAL AREA

BOARD OF ARCHITECTURE 10006 EDWARD D. WILSON STATE OF MARYLAND

KEY PLAN

REV.	DATE	DESCRIPTION	S&R BR.	CUSTOMER	PM	SECT. HEAD

	INITIALS	DATE
DRAWN BY	LA/NS	
CHECKED BY	MW/BW	
A-E MANAGER	EW	
ENVIRONMENTAL BRANCH	JH	
SAFETY BRANCH	CS	
CM	MMD	
PM	RWP	
CUSTOMER	JWB	
ENG. BRANCH	DGL	
ARCHITECTURE		

LEVEL 3 - FLOOR PLAN OVERALL

A-103

FLIGHT PROJECTS BUILDING

NATIONAL AERONAUTICS AND SPACE ADMINISTRATION

GODDARD SPACE FLIGHT CENTER GREENBELT, MARYLAND
FACILITIES MANAGEMENT DIVISION

DATE ISSUED	CoF CODE OR WR#	AECOM PROJECT NO.	SCALE
10/12/2012	12GXAZ	60187636	1/16" = 1'-0"

FILE DATE: 10/11/2012 3:51:22 PM

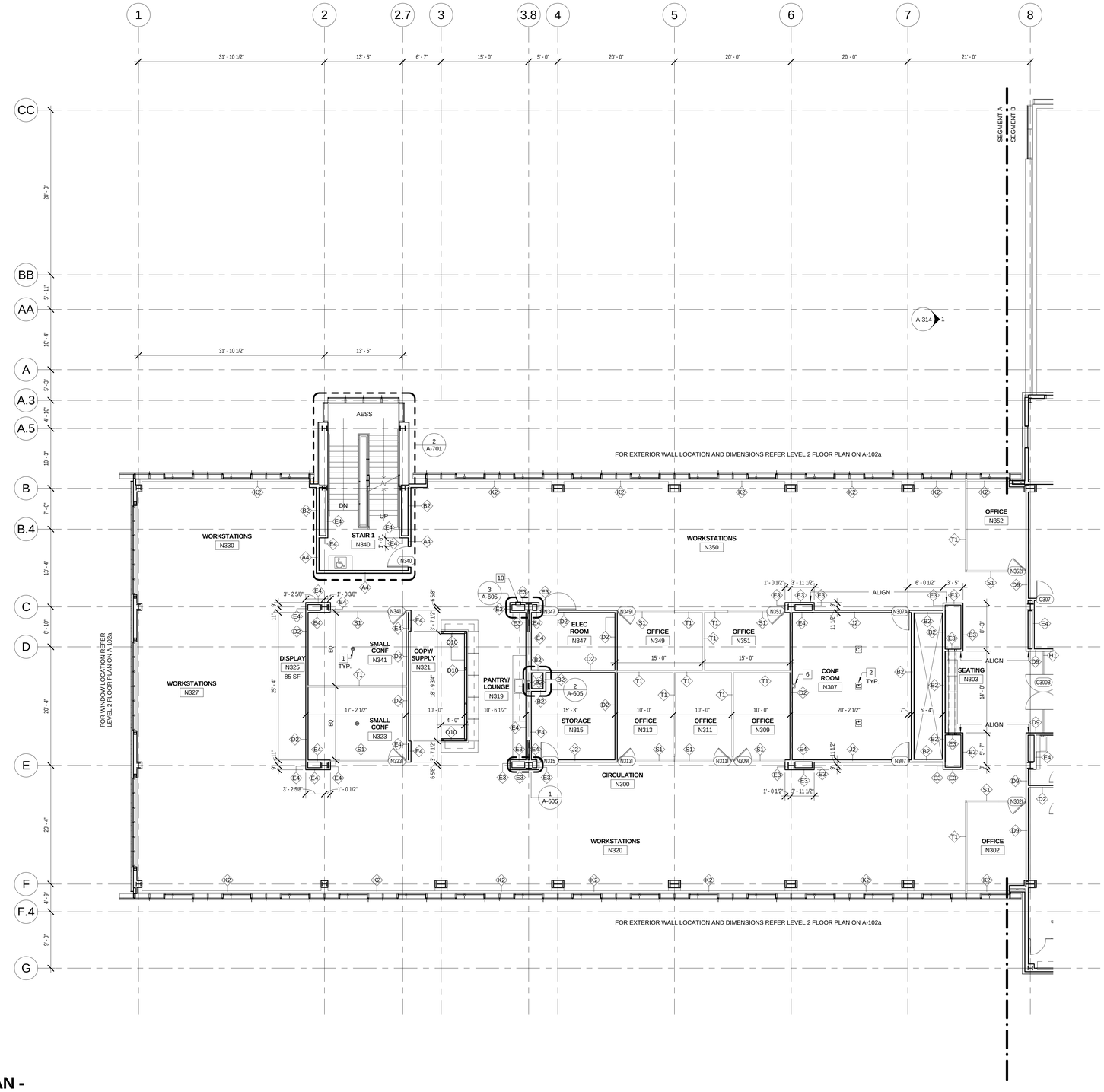

FLOOR PLAN GENERAL NOTES:

1. ALL WORK SHALL CONFORM TO ALL APPLICABLE CODES, REGULATIONS AND REQUIREMENTS OF ALL GOVERNING AUTHORITIES. REFER TO THE GENERAL NOTES SHEETS FOR APPLICABLE CODES.
2. REFER TO SHEET LS-010 SERIES FOR LIFE SAFETY FIRE SEPARATION, OCCUPANT LOAD, EXIT CAPACITY, FIRE EXTINGUISHER LOCATIONS AND EGRESS PLAN.
3. REFER TO SHEET A-801 & 802 FOR PARTITION TYPES.
4. REFER TO STRUCTURAL DRAWINGS FOR LOCATION AND SIZE OF STRUCTURAL ELEMENTS.
5. REFER TO MECHANICAL DRAWINGS FOR ALL PENETRATIONS AND INSTALL FIRESTOPS AS REQUIRED TO MAINTAIN FIRE RATING.
6. ALL DIMENSIONS SHALL BE VERIFIED WITH FIELD CONDITIONS. THE G.C. SHALL INFORM THE CLIENT BEFORE PROCEEDING WITH ANY DIMENSIONAL MODIFICATION DUE TO FIELD CONDITIONS.
7. MANUFACTURER'S OR VENDOR'S NAMEPLATE, TRADEMARKS, LOGOS OR OTHER IDENTIFICATIONS SHALL NOT BE VISIBLE WITHIN ANY PUBLIC OR TENANT AREA OF THE PROJECT. EXCEPTED ARE REQUIRED LABELS FROM TESTING AGENCIES OR MARKINGS REQUIRED BY CODE OR GOVERNING AUTHORITY.
8. ALL INTERIOR DIMENSIONS ARE TO FACE OF UNFINISHED GYPSUM BOARD UNLESS NOTED OTHERWISE.
9. ALL INTERIOR DOOR DIMENSIONS NOTED ON FLOOR PLAN ARE TO DOOR OPENING. IF NO DIMENSION IS NOTED ON FLOOR PLAN, REFER TO SHEET A-946 FOR TYPICAL DOOR LOCATION.
10. REFER TO A-900 SERIES SHEETS FOR ADDITIONAL FINISHES AND FINISH INSTALLATIONS.
11. G.C. TO PROVIDE LEVELING COMPOUND AT ALL LOCATIONS WHERE GLASS DOORS ARE LOCATED.
12. PARTITIONS ALONG COLUMN LINES TO BE CENTERED ON COLUMN LINE, UNLESS NOTED OTHERWISE.
13. CURTAIN WALL DIMENSIONS ARE TYPICALLY TO CENTER OF MULLION.

FLOOR PLAN KEYNOTES:

1. POKE-THRU FLOOR BOXES. REFER TO A-102a & A-102b FOR TYPICAL LOCATIONS.
2. FLOOR BOXES. REFER TO A-102a & A-102b FOR TYPICAL LOCATIONS.
3. TWO HD CAMERA, WALL MOUNTED, CENTERED BETWEEN THE PROJECTION SCREEN AT 5'-6" AND 6'-4" ABOVE AFF.
4. ONE HD CAMERA, BRACKET MOUNTED, 1'-0" FROM THE COLUMN LINE BB AT 6'-8" ABOVE AFF.
5. TWO HD CAMERA, WALL MOUNTED, CENTERED BETWEEN THE PROJECTION SCREEN AT 5'-10 1/2" AND 4'-8" ABOVE AFF.
6. ONE HD CAMERA, WALL MOUNTED, CENTERED BETWEEN THE PROJECTION SCREEN AT 5'-6" ABOVE AFF.
7. DOOR ACTUATOR, SURFACE WALL MOUNTED, 4'-0" ABOVE AFF.
8. CARD READER, SURFACE WALL MOUNTED, 4'-0" ABOVE AFF.
9. TELEPHONE, RECESSED WALL MOUNTED, 4'-0" ABOVE AFF.
10. SEMI RECESSED FIRE EXTINGUISHER CABINET.
11. CORNER GUARDS

1 LEVEL 3 FLOOR PLAN - SEGMENT A

A-103a | REF. A-301 | SCALE: 1/8" = 1'-0"

100% SUBMITTAL

NORTH

1/8"=1'-0" 8' 4' 0 8' 16'

AECOM
AECOM TECHNICAL SERVICES, INC.
3101 WILSON BOULEVARD
SUITE 900
ARLINGTON, VA 22201
T: 703-682-4900 F: 703.682.4901
www.aecom.com

SEAL AREA

BOARD OF ARCHITECTS
EDWARD WARREN
101664
REGISTERED ARCHITECT
STATE OF MARYLAND

KEY PLAN

SEGMENT - A

REV	DATE	DESCRIPTION	S&R BR.	CUSTOMER	PM	SECT. HEAD

	INITIALS	DATE
DRAWN BY	LA/NS	
CHECKED BY	MW/BW	
A-E MANAGER	EW	
ENVIRONMENTAL BRANCH	JH	
SAFETY BRANCH	CS	
CM	MMD	
PM	RWP	
CUSTOMER	JWB	
ENG. BRANCH	DGL	
ARCHITECTURE		

LEVEL 3 - FLOOR PLAN
SEGMENT A

A-103a

FLIGHT PROJECTS BUILDING

NATIONAL AERONAUTICS AND SPACE ADMINISTRATION

GODDARD SPACE FLIGHT CENTER GREENBELT, MARYLAND
FACILITIES MANAGEMENT DIVISION

DATE ISSUED	CoF CODE OR W/O#	AECOM PROJECT NO.	SCALE
10/12/2012	12GXAZ	60187636	1/8" = 1'-0"

FILE DATE: 10/11/2012 4:26:02 PM

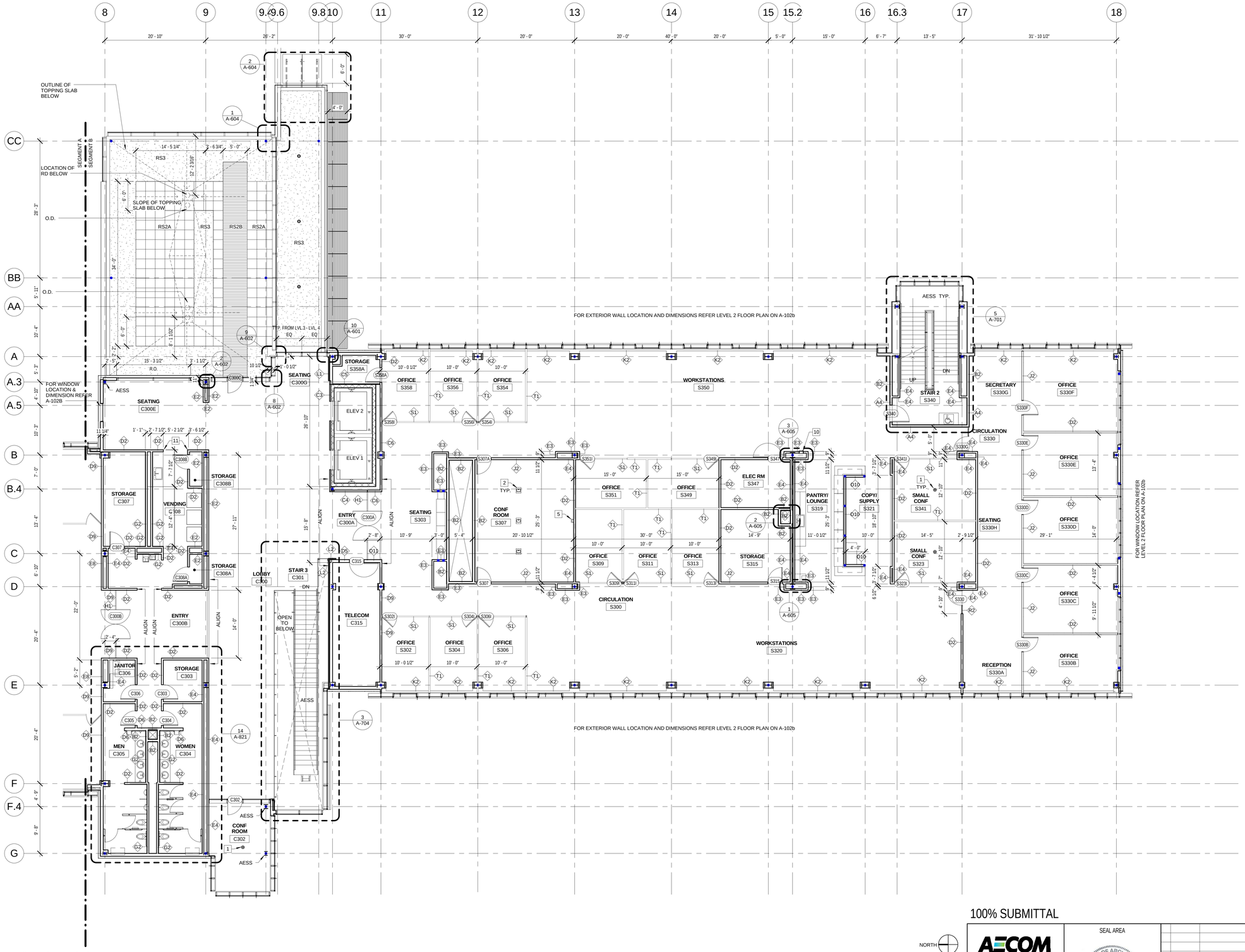

FLOOR PLAN GENERAL NOTES:

1. ALL WORK SHALL CONFORM TO ALL APPLICABLE CODES, REGULATIONS AND REQUIREMENTS OF ALL GOVERNING AUTHORITIES. REFER TO THE GENERAL NOTES SHEETS FOR APPLICABLE CODES.
2. REFER TO SHEET LS-010 SERIES FOR LIFE SAFETY FIRE SEPARATION, OCCUPANT LOAD, EXIT CAPACITY, FIRE EXTINGUISHER LOCATIONS AND EGRESS PLAN.
3. REFER TO SHEET A-801 & 802 FOR PARTITION TYPES.
4. REFER TO STRUCTURAL DRAWINGS FOR LOCATION AND SIZE OF STRUCTURAL ELEMENTS.
5. REFER TO MECHANICAL DRAWINGS FOR ALL PENETRATIONS AND INSTALL FIRESTOPS AS REQUIRED TO MAINTAIN FIRE RATING.
6. ALL DIMENSIONS SHALL BE VERIFIED WITH FIELD CONDITIONS. THE G.C. SHALL INFORM THE CLIENT BEFORE PROCEEDING WITH ANY DIMENSIONAL MODIFICATION DUE TO FIELD CONDITIONS.
7. MANUFACTURER'S OR VENDOR'S NAMEPLATE, TRADEMARKS, LOGOS OR OTHER IDENTIFICATIONS SHALL NOT BE VISIBLE WITHIN ANY PUBLIC OR TENANT AREA OF THE PROJECT. EXCEPTED ARE REQUIRED LABELS FROM TESTING AGENCIES OR MARKINGS REQUIRED BY CODE OR GOVERNING AUTHORITY.
8. ALL INTERIOR DIMENSIONS ARE TO FACE OF UNFINISHED GYPSUM BOARD UNLESS NOTED OTHERWISE.
9. ALL INTERIOR DOOR DIMENSIONS NOTED ON FLOOR PLAN ARE TO DOOR OPENING. IF NO DIMENSION IS NOTED ON FLOOR PLAN, REFER TO SHEET A-946 FOR TYPICAL DOOR LOCATION.
10. REFER TO A-900 SERIES SHEETS FOR ADDITIONAL FINISHES AND FINISH INSTALLATIONS.
11. G.C. TO PROVIDE LEVELING COMPOUND AT ALL LOCATIONS WHERE GLASS DOORS ARE LOCATED.
12. PARTITIONS ALONG COLUMN LINES TO BE CENTERED ON COLUMN LINE, UNLESS NOTED OTHERWISE.
13. CURTAIN WALL DIMENSIONS ARE TYPICALLY TO CENTER OF MULLION.

FLOOR PLAN KEYNOTES:

1. POKE-THRU FLOOR BOXES. REFER TO A-102a & A-102b FOR TYPICAL LOCATIONS.
2. FLOOR BOXES. REFER TO A-102a & A-102b FOR TYPICAL LOCATIONS.
3. TWO HD CAMERA, WALL MOUNTED, CENTERED BETWEEN THE PROJECTION SCREEN AT 5'-6" AND 6'-4" ABOVE AFF.
4. ONE HD CAMERA, BRACKET MOUNTED, 1'-0" FROM THE COLUMN LINE BB AT 6'-8" ABOVE AFF.
5. TWO HD CAMERA, WALL MOUNTED, CENTERED BETWEEN THE PROJECTION SCREEN AT 5'-10 1/2" AND 4'-8" ABOVE AFF.
6. ONE HD CAMERA, WALL MOUNTED, CENTERED BETWEEN THE PROJECTION SCREEN AT 5'-6" ABOVE AFF.
7. DOOR ACTUATOR, SURFACE WALL MOUNTED, 4'-0" ABOVE AFF.
8. CARD READER, SURFACE WALL MOUNTED, 4'-0" ABOVE AFF.
9. TELEPHONE, RECESSED WALL MOUNTED, 4'-0" ABOVE AFF.
10. SEMI RECESSED FIRE EXTINGUISHER CABINET.
11. CORNER GUARDS

1 LEVEL 3 FLOOR PLAN - SEGMENT B

A-103b REF. A-301 SCALE: 1/8" = 1'-0"

NORTH

1/8"=1'-0" 8' 4' 0 8' 16'

100% SUBMITTAL

AECOM
AECOM TECHNICAL SERVICES, INC.
3101 WILSON BOULEVARD
SUITE 900
ARLINGTON, VA 22201
T: 703-682-4900 F: 703.682.4901
www.aecom.com

SEAL AREA

BOARD OF ARCHITECTS 10094 REGISTERED ARCHITECT STATE OF MARYLAND

KEY PLAN

SEGMENT - B

REV	DATE	DESCRIPTION	S&R BR.	CUSTOMER	PM	SECT. HEAD

	INITIALS	DATE
DRAWN BY	LA/NS	
CHECKED BY	MW/BW	
A-E MANAGER	EW	
ENVIRONMENTAL BRANCH	JH	
SAFETY BRANCH	CS	
CM	MMD	
PM	RWP	
CUSTOMER	JWB	
ENG. BRANCH	DGL	
ARCHITECTURE		

LEVEL 3 - FLOOR PLAN SEGMENT B

A-103b

FLIGHT PROJECTS BUILDING

NATIONAL AERONAUTICS AND SPACE ADMINISTRATION

GODDARD SPACE FLIGHT CENTER GREENBELT, MARYLAND
FACILITIES MANAGEMENT DIVISION

DATE ISSUED	CoF CODE OR WR#	AECOM PROJECT NO.	SCALE
10/12/2012	12GXAZ	60187636	1/8" = 1'-0"

FILE DATE: 10/11/2012 6:41:44 PM

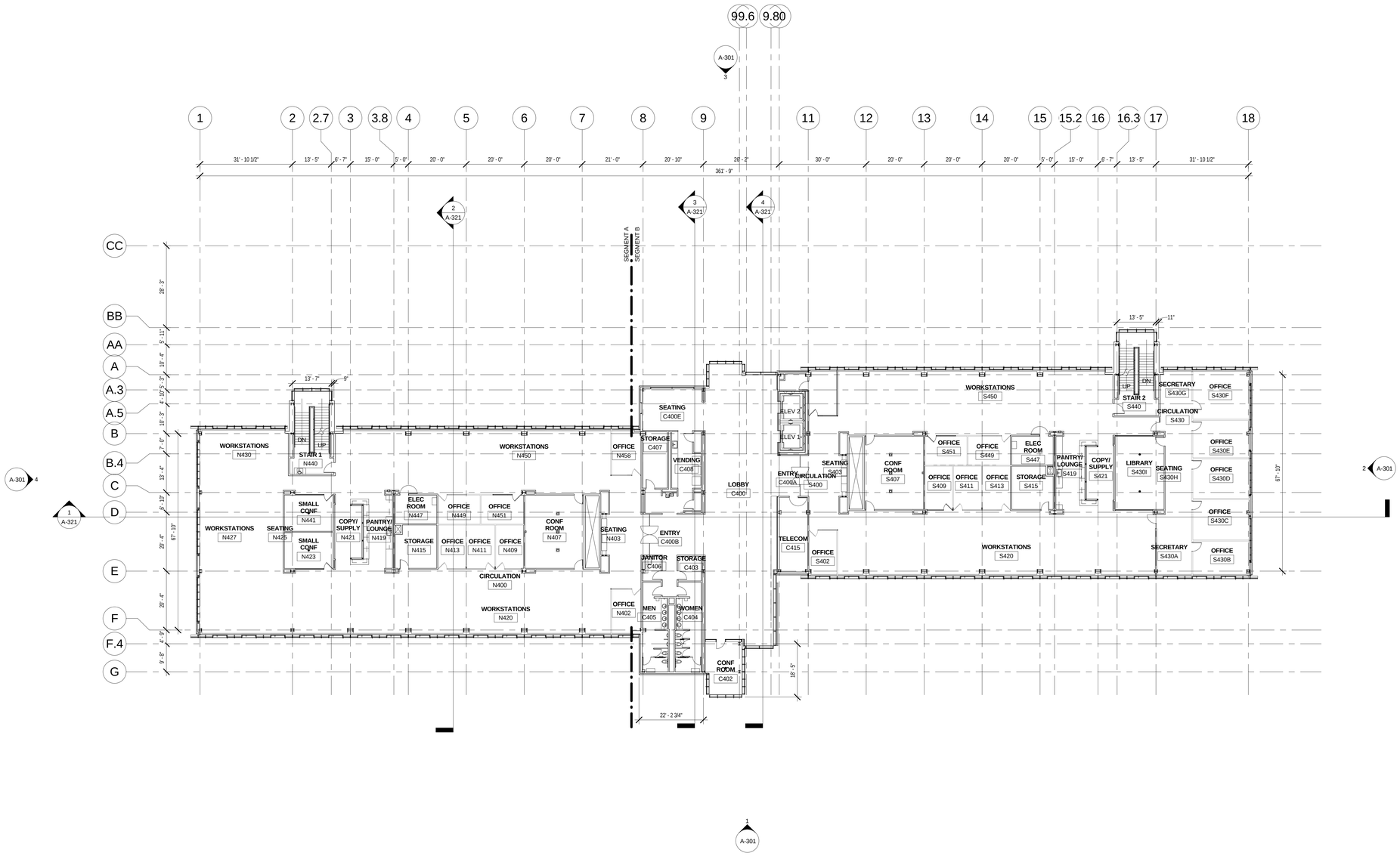

1 LEVEL 4 FLOOR PLAN

A-104 REF. A-301 SCALE: 1/16" = 1'-0"

100% SUBMITTAL

NORTH

1/16"=1'-0" 16' 12' 8' 4' 0 16' 32'

AECOM

AECOM TECHNICAL SERVICES, INC.
3101 WILSON BOULEVARD
SUITE 900
ARLINGTON, VA 22201

T: 703-682-4900 F: 703.682.4901
www.aecom.com

SEAL AREA

BOARD OF ARCHITECTURE 10084 STATE OF MARYLAND

KEY PLAN

REV.	DATE	DESCRIPTION	S&R BR.	CUSTOMER	PM	SECT. HEAD

	INITIALS	DATE
DRAWN BY	LA/NS	
CHECKED BY	MW/BW	
A-E MANAGER	EW	
ENVIRONMENTAL BRANCH	JH	
SAFETY BRANCH	CS	
CM	MMD	
PM	RWP	
CUSTOMER	JWB	
ENG. BRANCH	DGL	
ARCHITECTURE		

LEVEL 4 - FLOOR PLAN OVERALL

A-104

FLIGHT PROJECTS BUILDING

NATIONAL AERONAUTICS AND SPACE ADMINISTRATION

GODDARD SPACE FLIGHT CENTER GREENBELT, MARYLAND
FACILITIES MANAGEMENT DIVISION

DATE ISSUED	CoF CODE OR WR#	AECOM PROJECT NO.	SCALE
10/12/2012	12GXAZ	60187636	1/16" = 1'-0"

FILE DATE: 10/11/2012 3:54:59 PM

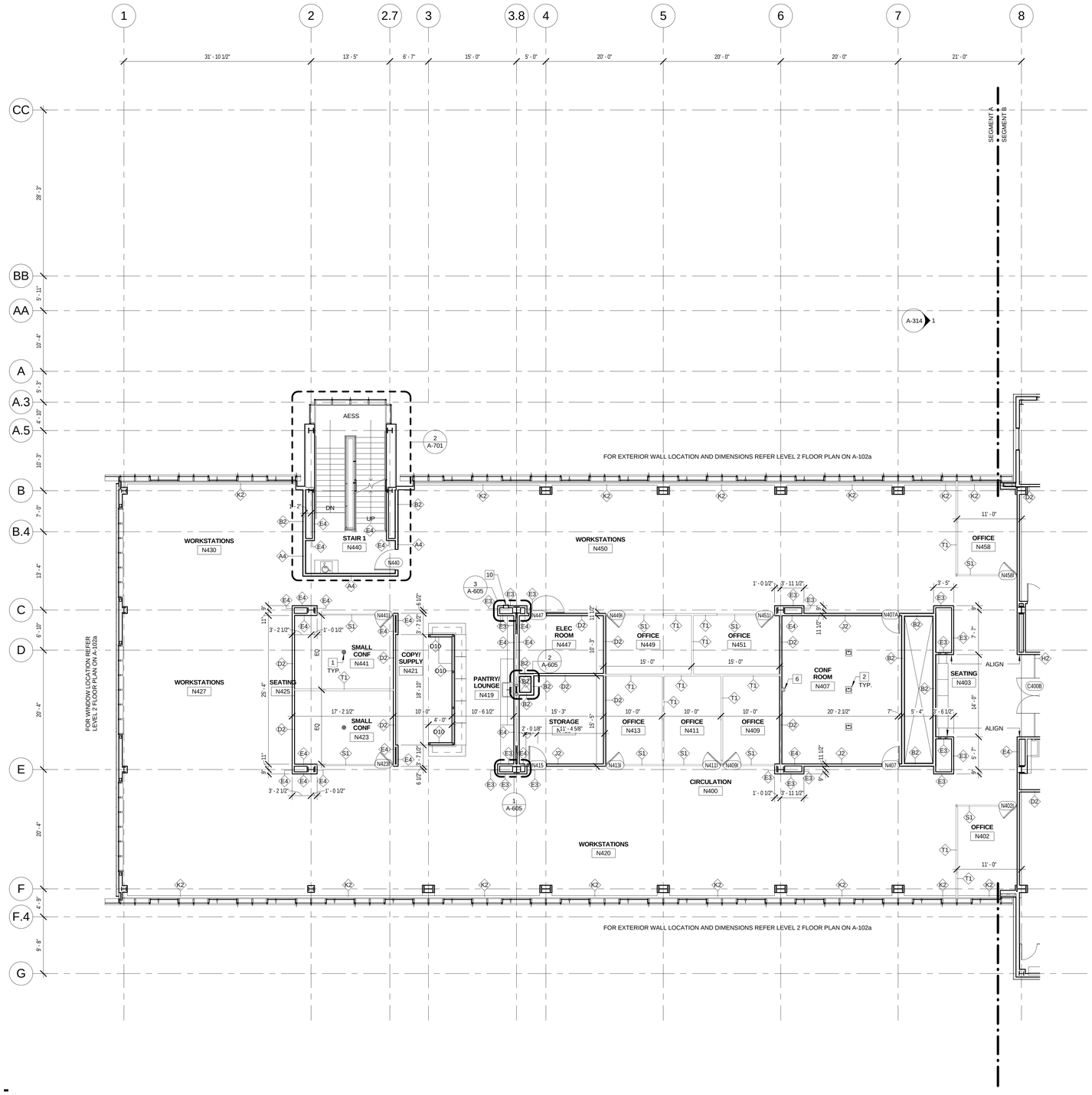

FLOOR PLAN GENERAL NOTES:

1. ALL WORK SHALL CONFORM TO ALL APPLICABLE CODES, REGULATIONS AND REQUIREMENTS OF ALL GOVERNING AUTHORITIES. REFER TO THE GENERAL NOTES SHEETS FOR APPLICABLE CODES.
2. REFER TO SHEET LS-010 SERIES FOR LIFE SAFETY FIRE SEPARATION, OCCUPANT LOAD, EXIT CAPACITY, FIRE EXTINGUISHER LOCATIONS AND EGRESS PLAN.
3. REFER TO SHEET A-801 & 802 FOR PARTITION TYPES.
4. REFER TO STRUCTURAL DRAWINGS FOR LOCATION AND SIZE OF STRUCTURAL ELEMENTS.
5. REFER TO MECHANICAL DRAWINGS FOR ALL PENETRATIONS AND INSTALL FIRESTOPS AS REQUIRED TO MAINTAIN FIRE RATING.
6. ALL DIMENSIONS SHALL BE VERIFIED WITH FIELD CONDITIONS. THE G.C. SHALL INFORM THE CLIENT BEFORE PROCEEDING WITH ANY DIMENSIONAL MODIFICATION DUE TO FIELD CONDITIONS.
7. MANUFACTURER'S OR VENDOR'S NAMEPLATE, TRADEMARKS, LOGOS OR OTHER IDENTIFICATIONS SHALL NOT BE VISIBLE WITHIN ANY PUBLIC OR TENANT AREA OF THE PROJECT. EXCEPTED ARE REQUIRED LABELS FROM TESTING AGENCIES OR MARKINGS REQUIRED BY CODE OR GOVERNING AUTHORITY.
8. ALL INTERIOR DIMENSIONS ARE TO FACE OF UNFINISHED GYPSUM BOARD UNLESS NOTED OTHERWISE.
9. ALL INTERIOR DOOR DIMENSIONS NOTED ON FLOOR PLAN ARE TO DOOR OPENING. IF NO DIMENSION IS NOTED ON FLOOR PLAN, REFER TO SHEET A-946 FOR TYPICAL DOOR LOCATION.
10. REFER TO A-900 SERIES SHEETS FOR ADDITIONAL FINISHES AND FINISH INSTALLATIONS.
11. G.C. TO PROVIDE LEVELING COMPOUND AT ALL LOCATIONS WHERE GLASS DOORS ARE LOCATED.
12. PARTITIONS ALONG COLUMN LINES TO BE CENTERED ON COLUMN LINE, UNLESS NOTED OTHERWISE.
13. CURTAIN WALL DIMENSIONS ARE TYPICALLY TO CENTER OF MULLION.

FLOOR PLAN KEYNOTES:

1. POKE-THRU FLOOR BOXES. REFER TO A-102a & A-102b FOR TYPICAL LOCATIONS.
2. FLOOR BOXES. REFER TO A-102a & A-102b FOR TYPICAL LOCATIONS.
3. TWO HD CAMERA, WALL MOUNTED, CENTERED BETWEEN THE PROJECTION SCREEN AT 5'-6" AND 6'-4" ABOVE AFF.
4. ONE HD CAMERA, BRACKET MOUNTED, 1'-0" FROM THE COLUMN LINE BB AT 6'-8" ABOVE AFF.
5. TWO HD CAMERA, WALL MOUNTED, CENTERED BETWEEN THE PROJECTION SCREEN AT 5'-10 1/2" AND 4'-8" ABOVE AFF.
6. ONE HD CAMERA, WALL MOUNTED, CENTERED BETWEEN THE PROJECTION SCREEN AT 5'-6" ABOVE AFF.
7. DOOR ACTUATOR, SURFACE WALL MOUNTED, 4'-0" ABOVE AFF.
8. CARD READER, SURFACE WALL MOUNTED, 4'-0" ABOVE AFF.
9. TELEPHONE, RECESSED WALL MOUNTED, 4'-0" ABOVE AFF.
10. SEMI RECESSED FIRE EXTINGUISHER CABINET.
11. CORNER GUARDS

1 LEVEL 4 FLOOR PLAN - SEGMENT A

A-104a REF. A-301 SCALE: 1/8" = 1'-0"

100% SUBMITTAL

NORTH

1/8"=1'-0" 8' 4' 0 8' 16'

AECOM
AECOM TECHNICAL SERVICES, INC.
3101 WILSON BOULEVARD
SUITE 900
ARLINGTON, VA 22201
T: 703-682-4900 F: 703.682.4901
www.aecom.com

SEAL AREA

BOARD OF ARCHITECTS EDWARD W. WEBB REGISTERED STATE OF MARYLAND

KEY PLAN

SEGMENT - A

REV	DATE	DESCRIPTION	S&R BR.	CUSTOMER	PM	SECT. HEAD

	INITIALS	DATE
DRAWN BY	LA/NS	
CHECKED BY	BW/MW	
A-E MANAGER	EW	
ENVIRONMENTAL BRANCH	JH	
SAFETY BRANCH	CS	
CM	MMD	
PM	RWP	
CUSTOMER	JWB	
ENG. BRANCH	DGL	
ARCHITECTURE		

LEVEL 4 - FLOOR PLAN SEGMENT A

A-104a

FLIGHT PROJECTS BUILDING

NATIONAL AERONAUTICS AND SPACE ADMINISTRATION
GODDARD SPACE FLIGHT CENTER GREENBELT, MARYLAND
FACILITIES MANAGEMENT DIVISION

DATE ISSUED	CoF CODE OR WR#	AECOM PROJECT NO.	SCALE
10/12/2012	12GXAZ	60187636	1/8" = 1'-0"

FILE DATE: 10/11/2012 3:55:13 PM

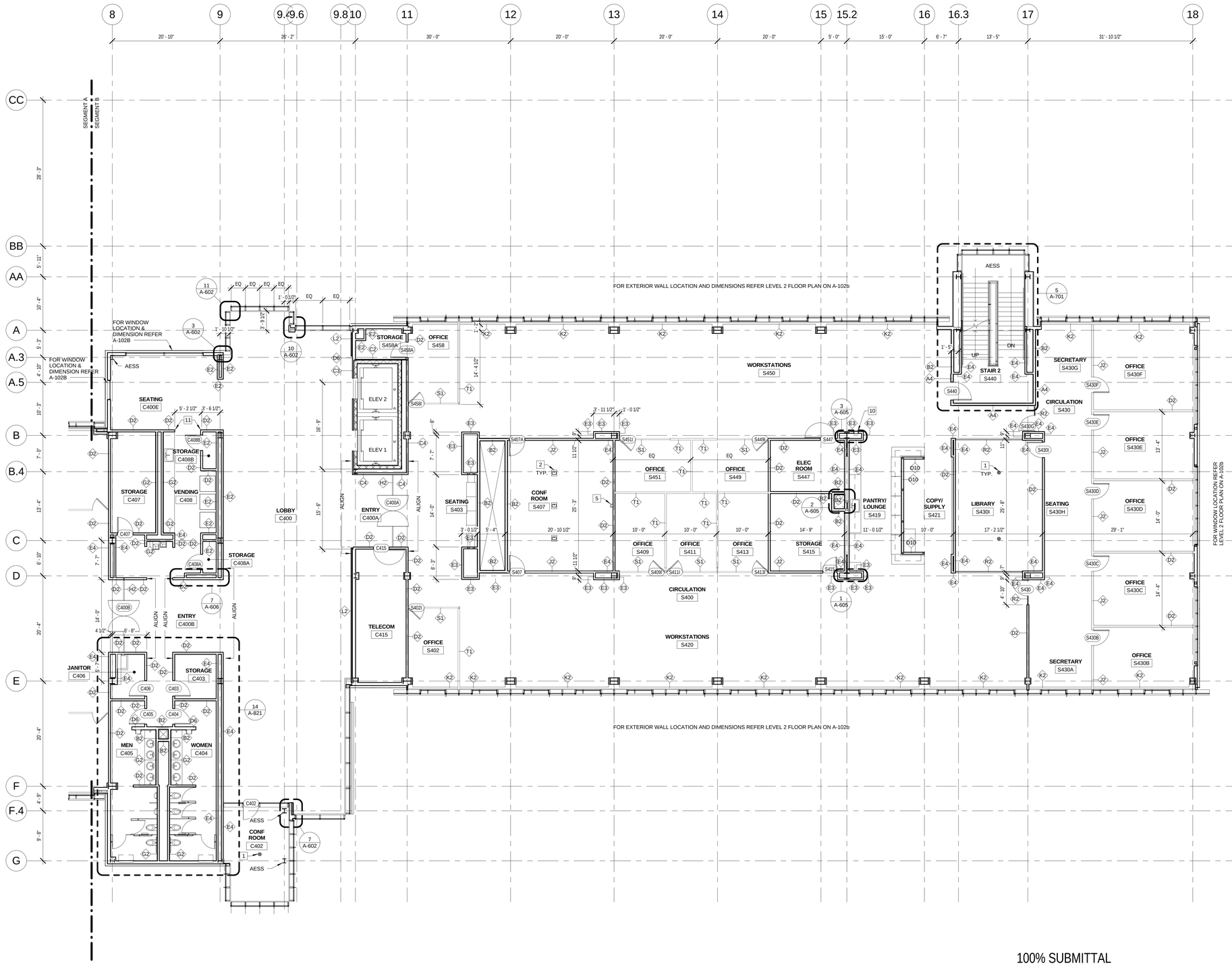

LEVEL 4 FLOOR PLAN - SEGMENT B

1 | A-104b | REF. A-301 | SCALE: 1/8" = 1'-0"

FLOOR PLAN GENERAL NOTES:

1. ALL WORK SHALL CONFORM TO ALL APPLICABLE CODES, REGULATIONS AND REQUIREMENTS OF ALL GOVERNING AUTHORITIES. REFER TO THE GENERAL NOTES SHEETS FOR APPLICABLE CODES.
2. REFER TO SHEET LS-010 SERIES FOR LIFE SAFETY FIRE SEPARATION, OCCUPANT LOAD, EXIT CAPACITY, FIRE EXTINGUISHER LOCATIONS AND EGRESS PLAN.
3. REFER TO SHEET A-801 & 802 FOR PARTITION TYPES.
4. REFER TO STRUCTURAL DRAWINGS FOR LOCATION AND SIZE OF STRUCTURAL ELEMENTS.
5. REFER TO MECHANICAL DRAWINGS FOR ALL PENETRATIONS AND INSTALL FIRESTOPS AS REQUIRED TO MAINTAIN FIRE RATING.
6. ALL DIMENSIONS SHALL BE VERIFIED WITH FIELD CONDITIONS. THE G.C. SHALL INFORM THE CLIENT BEFORE PROCEEDING WITH ANY DIMENSIONAL MODIFICATION DUE TO FIELD CONDITIONS.
7. MANUFACTURER'S OR VENDOR'S NAMEPLATE, TRADEMARKS, LOGOS OR OTHER IDENTIFICATIONS SHALL NOT BE VISIBLE WITHIN ANY PUBLIC OR TENANT AREA OF THE PROJECT. EXCEPTED ARE REQUIRED LABELS FROM TESTING AGENCIES OR MARKINGS REQUIRED BY CODE OR GOVERNING AUTHORITY.
8. ALL INTERIOR DIMENSIONS ARE TO FACE OF UNFINISHED GYPSUM BOARD UNLESS NOTED OTHERWISE.
9. ALL INTERIOR DOOR DIMENSIONS NOTED ON FLOOR PLAN ARE TO DOOR OPENING. IF NO DIMENSION IS NOTED ON FLOOR PLAN, REFER TO SHEET A-946 FOR TYPICAL DOOR LOCATION.
10. REFER TO A-900 SERIES SHEETS FOR ADDITIONAL FINISHES AND FINISH INSTALLATIONS.
11. G.C. TO PROVIDE LEVELING COMPOUND AT ALL LOCATIONS WHERE GLASS DOORS ARE LOCATED.
12. PARTITIONS ALONG COLUMN LINES TO BE CENTERED ON COLUMN LINE, UNLESS NOTED OTHERWISE.
13. CURTAIN WALL DIMENSIONS ARE TYPICALLY TO CENTER OF MULLION.

FLOOR PLAN KEYNOTES:

1. POKE-THRU FLOOR BOXES. REFER TO A-102a & A-102b FOR TYPICAL LOCATIONS.
2. FLOOR BOXES. REFER TO A-102a & A-102b FOR TYPICAL LOCATIONS.
3. TWO HD CAMERA, WALL MOUNTED, CENTERED BETWEEN THE PROJECTION SCREEN AT 5'-6" AND 6'-4" ABOVE AFF.
4. ONE HD CAMERA, BRACKET MOUNTED, 1'-0" FROM THE COLUMN LINE BB AT 6'-8" ABOVE AFF.
5. TWO HD CAMERA, WALL MOUNTED, CENTERED BETWEEN THE PROJECTION SCREEN AT 5'-10 1/2" AND 4'-8" ABOVE AFF.
6. ONE HD CAMERA, WALL MOUNTED, CENTERED BETWEEN THE PROJECTION SCREEN AT 5'-6" ABOVE AFF.
7. DOOR ACTUATOR, SURFACE WALL MOUNTED, 4'-0" ABOVE AFF.
8. CARD READER, SURFACE WALL MOUNTED, 4'-0" ABOVE AFF.
9. TELEPHONE, RECESSED WALL MOUNTED, 4'-0" ABOVE AFF.
10. SEMI RECESSED FIRE EXTINGUISHER CABINET.
11. CORNER GUARDS

100% SUBMITTAL

NORTH

1/8"=1'-0" 8' 4' 0 8' 16'

AECOM

AECOM TECHNICAL SERVICES, INC.
3101 WILSON BOULEVARD
SUITE 900
ARLINGTON, VA 22201

T: 703-682-4900 F: 703.682.4901
www.aecom.com

SEAL AREA

BOARD OF ARCHITECTURE 10164 BRUCE D. WEBER STATE OF MARYLAND

KEY PLAN

SEGMENT - B

REV	DATE	DESCRIPTION	S&R BR.	CUSTOMER	PM	SECT. HEAD

	INITIALS	DATE
DRAWN BY	LA/NS	
CHECKED BY	BW/MW	
A-E MANAGER	EW	
ENVIRONMENTAL BRANCH	JH	
SAFETY BRANCH	CS	
CM	MMD	
PM	RWP	
CUSTOMER	JWB	
ENG. BRANCH	DGL	
ARCHITECTURE		

LEVEL 4 - FLOOR PLAN SEGMENT B

A-104b

FLIGHT PROJECTS BUILDING

NATIONAL AERONAUTICS AND SPACE ADMINISTRATION
GODDARD SPACE FLIGHT CENTER GREENBELT, MARYLAND
FACILITIES MANAGEMENT DIVISION

DATE ISSUED	CoF CODE OR WR#	AECOM PROJECT NO.	SCALE
10/12/2012	12GXAZ	60187636	1/8" = 1'-0"

FILE DATE: 10/11/2012 3:55:28 PM

FLOOR PLAN GENERAL NOTES:

1. ALL WORK SHALL CONFORM TO ALL APPLICABLE CODES, REGULATIONS AND REQUIREMENTS OF ALL GOVERNING AUTHORITIES. REFER TO THE GENERAL NOTES SHEETS FOR APPLICABLE CODES.
2. REFER TO SHEET LS-010 SERIES FOR LIFE SAFETY FIRE SEPARATION, OCCUPANT LOAD, EXIT CAPACITY, FIRE EXTINGUISHER LOCATIONS AND EGRESS PLAN.
3. REFER TO SHEET A-801 & 802 FOR PARTITION TYPES.
4. REFER TO STRUCTURAL DRAWINGS FOR LOCATION AND SIZE OF STRUCTURAL ELEMENTS.
5. REFER TO MECHANICAL DRAWINGS FOR ALL PENETRATIONS AND INSTALL FIRESTOPS AS REQUIRED TO MAINTAIN FIRE RATING.
6. ALL DIMENSIONS SHALL BE VERIFIED WITH FIELD CONDITIONS. THE G.C. SHALL INFORM THE CLIENT BEFORE PROCEEDING WITH ANY DIMENSIONAL MODIFICATION DUE TO FIELD CONDITIONS.
7. MANUFACTURER'S OR VENDOR'S NAMEPLATE, TRADEMARKS, LOGOS OR OTHER IDENTIFICATIONS SHALL NOT BE VISIBLE WITHIN ANY PUBLIC OR TENANT AREA OF THE PROJECT. EXCEPTED ARE REQUIRED LABELS FROM TESTING AGENCIES OR MARKINGS REQUIRED BY CODE OR GOVERNING AUTHORITY.
8. ALL INTERIOR DIMENSIONS ARE TO FACE OF UNFINISHED GYPSUM BOARD UNLESS NOTED OTHERWISE.
9. ALL INTERIOR DOOR DIMENSIONS NOTED ON FLOOR PLAN ARE TO DOOR OPENING. IF NO DIMENSION IS NOTED ON FLOOR PLAN, REFER TO SHEET A-946 FOR TYPICAL DOOR LOCATION.
10. REFER TO A-900 SERIES SHEETS FOR ADDITIONAL FINISHES AND FINISH INSTALLATIONS.
11. G.C. TO PROVIDE LEVELING COMPOUND AT ALL LOCATIONS WHERE GLASS DOORS ARE LOCATED.
12. PARTITIONS ALONG COLUMN LINES TO BE CENTERED ON COLUMN LINE, UNLESS NOTED OTHERWISE.
13. CURTAIN WALL DIMENSIONS ARE TYPICALLY TO CENTER OF MULLION.

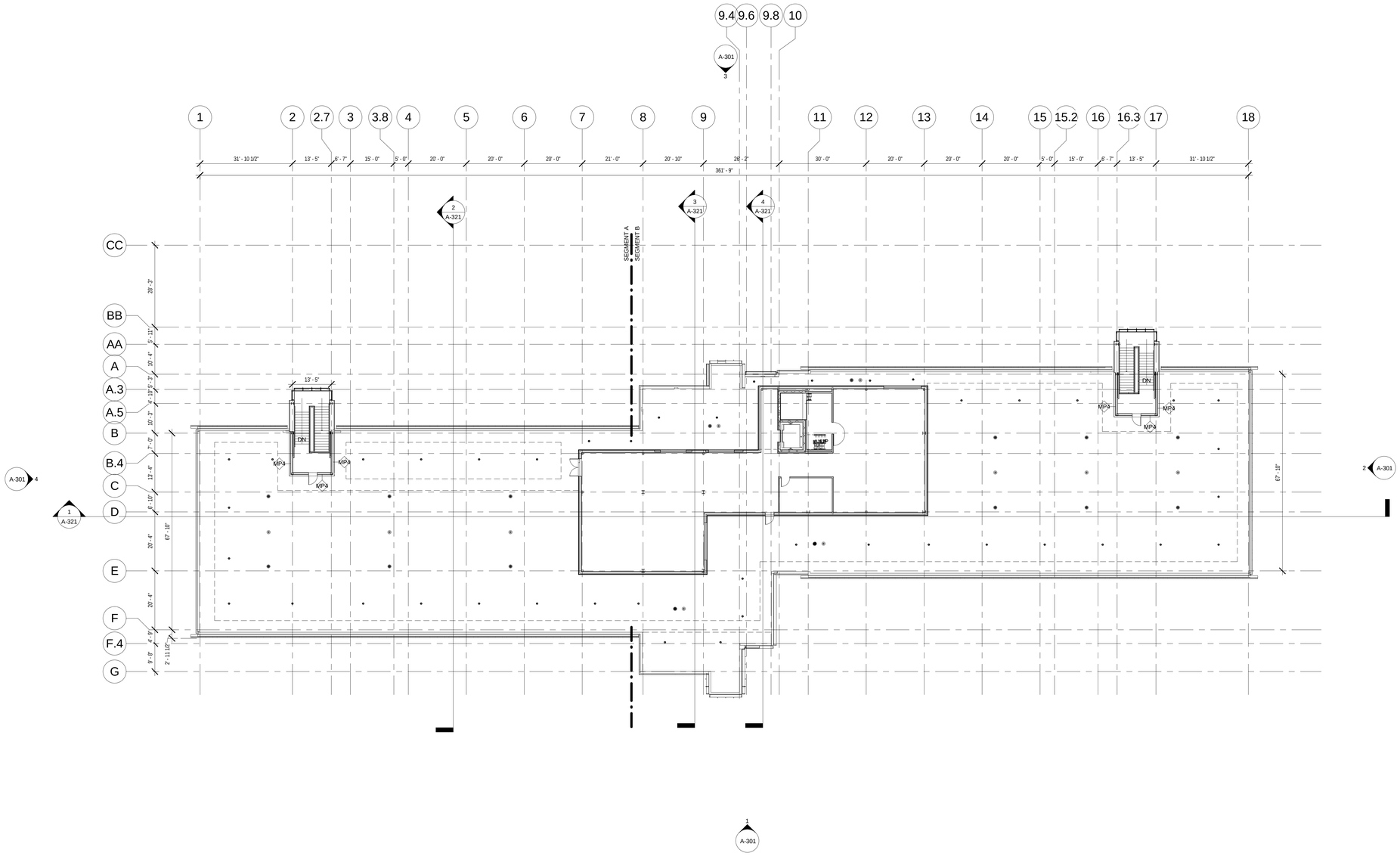

1 PENTHOUSE LEVEL FLOOR PLAN

A-105 REF. A-301 SCALE: 1/16" = 1'-0"

100% SUBMITTAL

NORTH

1/16"=1'-0" 16' 12' 8' 4' 0 16' 32'

AECOM

AECOM TECHNICAL SERVICES, INC.
3101 WILSON BOULEVARD
SUITE 900
ARLINGTON, VA 22201

T: 703-682-4900 F: 703.682.4901
www.aecom.com

SEAL AREA

BOARD OF ARCHITECTS 10084 EDWARD D. WILSON STATE OF MARYLAND

KEY PLAN

REV	DATE	DESCRIPTION	S&R BR.	CUSTOMER	PM	SECT. HEAD

	INITIALS	DATE
DRAWN BY	LA/NS	
CHECKED BY	BW/MW	
A-E MANAGER	EW	
ENVIRONMENTAL BRANCH	JH	
SAFETY BRANCH	CS	
CM	MMD	
PM	RWP	
CUSTOMER	JWB	
ENG. BRANCH	DGL	

ARCHITECTURE

PENTHOUSE - FLOOR PLAN OVERALL

A-105

FLIGHT PROJECTS BUILDING

NATIONAL AERONAUTICS AND SPACE ADMINISTRATION

GODDARD SPACE FLIGHT CENTER GREENBELT, MARYLAND
FACILITIES MANAGEMENT DIVISION

DATE ISSUED	CoF CODE OR WR#	AECOM PROJECT NO.	SCALE
10/12/2012	12GXAZ	60187636	1/16" = 1'-0"

FILE DATE: 10/11/2012 3:55:43 PM

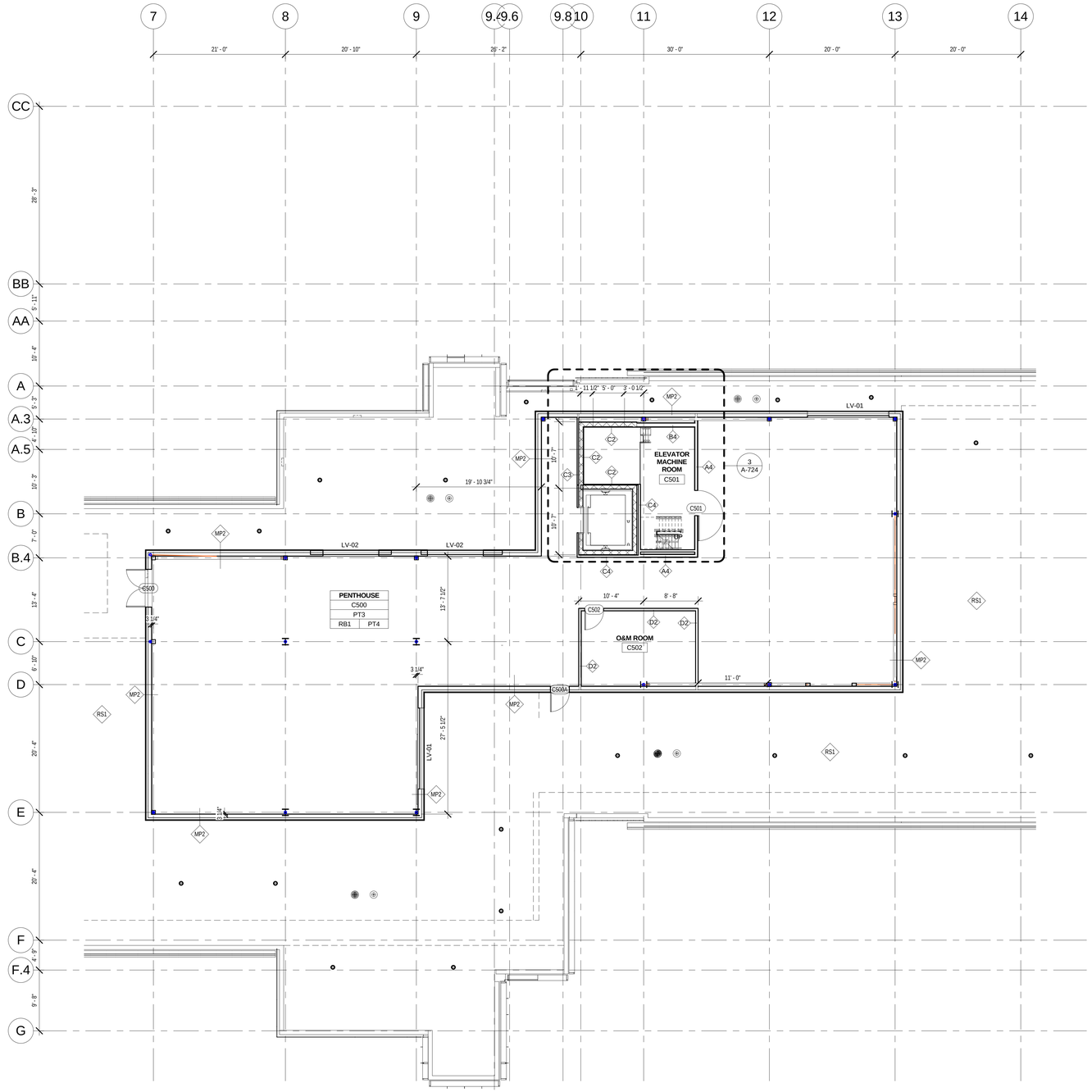

FLOOR PLAN GENERAL NOTES:

1. ALL WORK SHALL CONFORM TO ALL APPLICABLE CODES, REGULATIONS AND REQUIREMENTS OF ALL GOVERNING AUTHORITIES. REFER TO THE GENERAL NOTES SHEETS FOR APPLICABLE CODES.
2. REFER TO SHEET LS-010 SERIES FOR LIFE SAFETY FIRE SEPARATION, OCCUPANT LOAD, EXIT CAPACITY, FIRE EXTINGUISHER LOCATIONS AND EGRESS PLAN.
3. REFER TO SHEET A-801 & 802 FOR PARTITION TYPES.
4. REFER TO STRUCTURAL DRAWINGS FOR LOCATION AND SIZE OF STRUCTURAL ELEMENTS.
5. REFER TO MECHANICAL DRAWINGS FOR ALL PENETRATIONS AND INSTALL FIRESTOPS AS REQUIRED TO MAINTAIN FIRE RATING.
6. ALL DIMENSIONS SHALL BE VERIFIED WITH FIELD CONDITIONS. THE G.C. SHALL INFORM THE CLIENT BEFORE PROCEEDING WITH ANY DIMENSIONAL MODIFICATION DUE TO FIELD CONDITIONS.
7. MANUFACTURER'S OR VENDOR'S NAMEPLATE, TRADEMARKS, LOGOS OR OTHER IDENTIFICATIONS SHALL NOT BE VISIBLE WITHIN ANY PUBLIC OR TENANT AREA OF THE PROJECT. EXCEPTED ARE REQUIRED LABELS FROM TESTING AGENCIES OR MARKINGS REQUIRED BY CODE OR GOVERNING AUTHORITY.
8. ALL INTERIOR DIMENSIONS ARE TO FACE OF UNFINISHED GYPSUM BOARD UNLESS NOTED OTHERWISE.
9. ALL INTERIOR DOOR DIMENSIONS NOTED ON FLOOR PLAN ARE TO DOOR OPENING. IF NO DIMENSION IS NOTED ON FLOOR PLAN, REFER TO SHEET A-946 FOR TYPICAL DOOR LOCATION.
10. REFER TO A-900 SERIES SHEETS FOR ADDITIONAL FINISHES AND FINISH INSTALLATIONS.
11. G.C. TO PROVIDE LEVELING COMPOUND AT ALL LOCATIONS WHERE GLASS DOORS ARE LOCATED.
12. PARTITIONS ALONG COLUMN LINES TO BE CENTERED ON COLUMN LINE, UNLESS NOTED OTHERWISE.
13. CURTAIN WALL DIMENSIONS ARE TYPICALLY TO CENTER OF MULLION.

1 PENTHOUSE LEVEL FLOOR PLAN - SEGMENT B

A-106 REF. A-301 SCALE: 1/8" = 1'-0"

NORTH

1/8"=1'-0" 8' 4' 0 8' 16'

100% SUBMITTAL

AECOM

AECOM TECHNICAL SERVICES, INC.
3101 WILSON BOULEVARD
SUITE 900
ARLINGTON, VA 22201

T: 703-682-4900 F: 703.682.4901
www.aecom.com

SEAL AREA

BOARD OF ARCHITECTS
EDWARD WARNER
101594
STATE OF MARYLAND

KEY PLAN

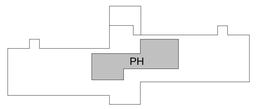

REV	DATE	DESCRIPTION	S&R BR.	CUSTOMER	PM	SECT. HEAD

	INITIALS	DATE
DRAWN BY	LA/NS	
CHECKED BY	BW/MW	
A-E MANAGER	EW	
ENVIRONMENTAL BRANCH	JH	
SAFETY BRANCH	CS	
CM	MMD	
PM	RWP	
CUSTOMER	JWB	
ENG. BRANCH	DGL	
ARCHITECTURE		

PENTHOUSE PLAN

A-106

FLIGHT PROJECTS BUILDING

NATIONAL AERONAUTICS AND SPACE ADMINISTRATION

GODDARD SPACE FLIGHT CENTER GREENBELT, MARYLAND
FACILITIES MANAGEMENT DIVISION

DATE ISSUED	CoF CODE OR WR#	AECOM PROJECT NO.	SCALE
10/12/2012	12GXAZ	60187636	1/8" = 1'-0"

FILE DATE: 10/11/2012 3:55:54 PM

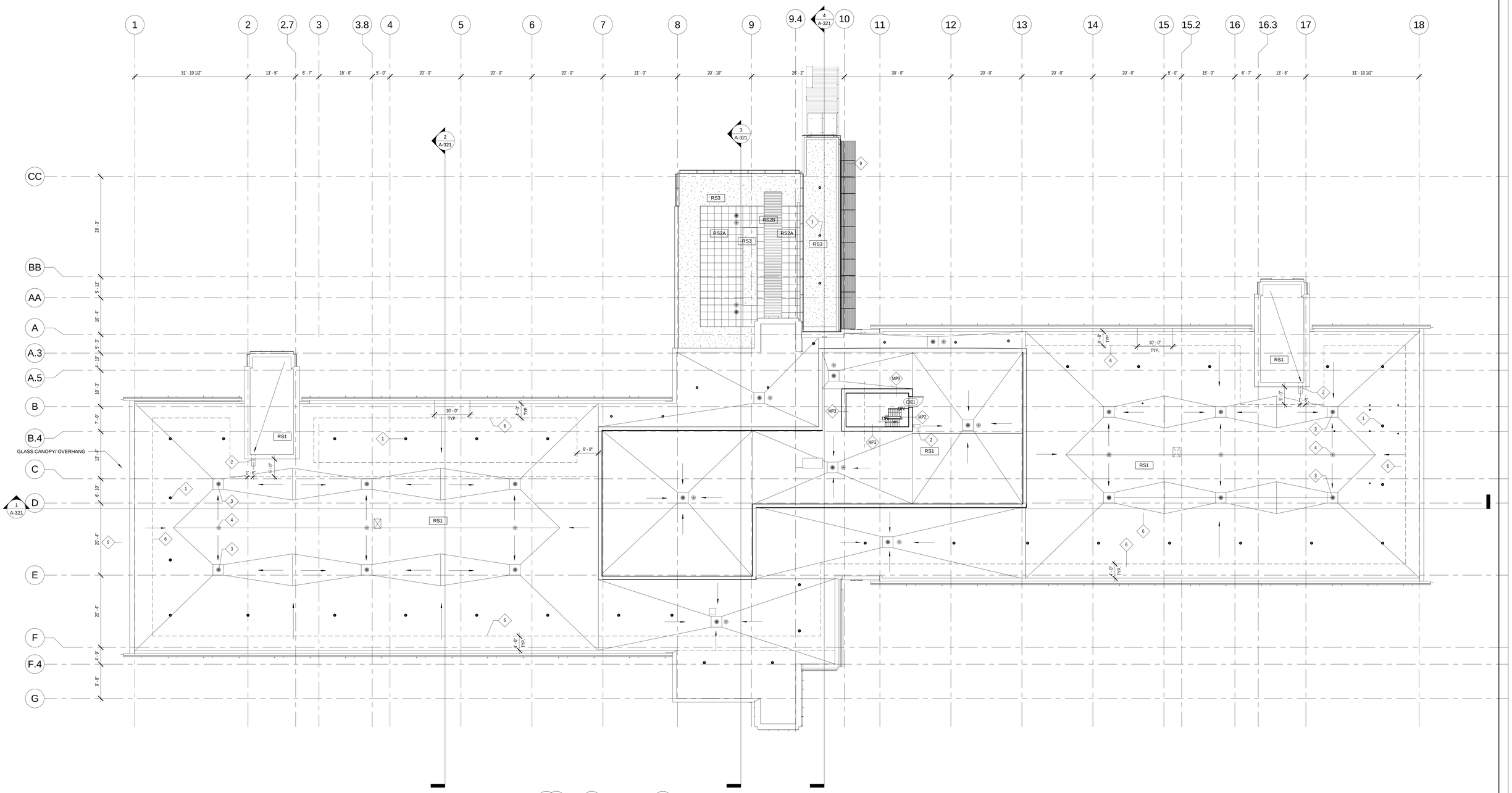

1 PENTHOUSE LEVEL FLOOR PLAN

A-107 REF. A-301 SCALE: 3/32" = 1'-0"

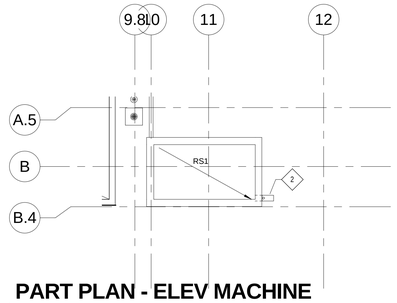

2 PART PLAN - ELEV MACHINE ROOM ROOF LEVEL

A-107 REF. A-301 SCALE: 3/32" = 1'-0"

KEY NOTES

1. TIE OFFS @ 20'-0" O.C. AND APPROX. 10'-0" FROM PARAPET - TYP. REFER DETAIL 10/A-612
2. DOWNTAKE PIPE W/ SPLASH BLOCK
3. ROOF DRAIN
4. OVERFLOW DRAIN
5. NOT USED
6. WALK PAD - TYP 4'0" WIDE UNO.
7. NOT USED.
8. NOT USED.
9. GLASS CANOPY - LGU1. REFER DETAILS ON A-605, A-611
10. NOT USED.

100% SUBMITTAL

AECOM

AECOM TECHNICAL SERVICES, INC.
3101 WILSON BOULEVARD
SUITE 900
ARLINGTON, VA 22201

T: 703-682-4900 F: 703.682.4901
www.aecom.com

SEAL AREA

KEY PLAN

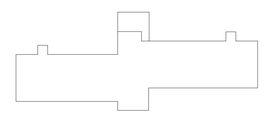

REV	DATE	DESCRIPTION	S&R BR.	CUSTOMER	PM	SECT. HEAD

	INITIALS	DATE
DRAWN BY	LA/NS	
CHECKED BY	BW/MW	
A-E MANAGER	EW	
ENVIRONMENTAL BRANCH	JH	
SAFETY BRANCH	CS	
CM	MMD	
PM	RWP	
CUSTOMER	JWB	
ENG. BRANCH	DGL	
ARCHITECTURE		

OVERALL ROOF PLAN

A-107

FLIGHT PROJECTS BUILDING

NATIONAL AERONAUTICS AND SPACE ADMINISTRATION

GODDARD SPACE FLIGHT CENTER GREENBELT, MARYLAND
FACILITIES MANAGEMENT DIVISION

DATE ISSUED	CoF CODE OR WR#	AECOM PROJECT NO.	SCALE
10/12/2012	12GXAZ	60187636	3/32" = 1'-0"

FILE DATE: 10/11/2012 5:41:15 PM

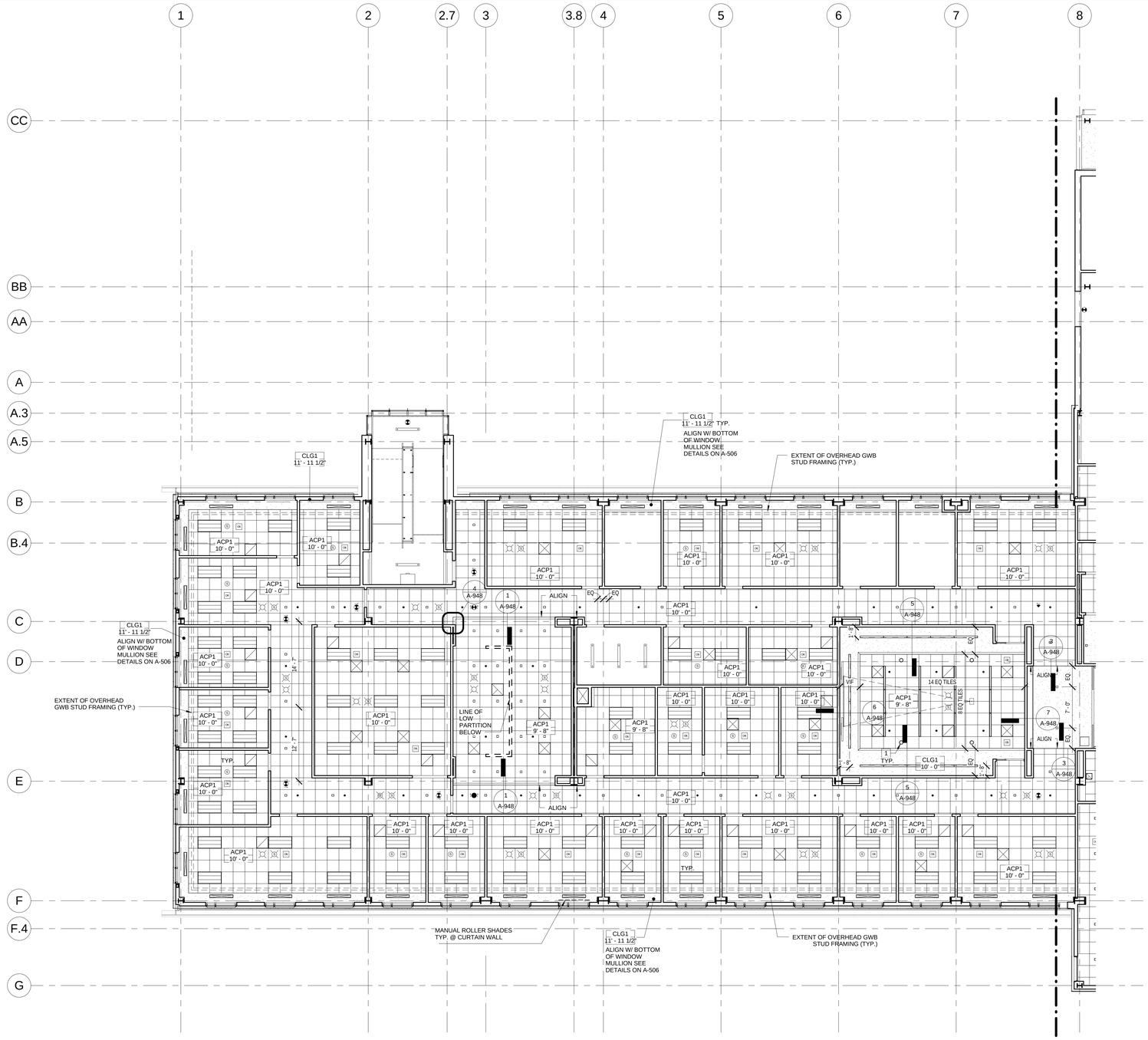

LEVEL 1 - REFLECTED CEILING PLAN SEGMENT A

1 | A-201a REF. A-301 SCALE: 1/8" = 1'-0"

REFLECTED CEILING PLAN GENERAL NOTES:

1. ALL PERIMETER OFFICES TO BE @ 10'-0" U.N.O.
2. ALL MECHANICAL, ELECTRICAL AND PLUMBING WORK LOCATED ABOVE GYP. BOARD CEILINGS SHALL BE LOCATED TO MINIMIZE REQUIRED ACCESS TO INACCESSIBLE CEILING. GC TO SUBMIT COORDINATED LAYOUT DRAWINGS OF ALL LOCATIONS OF LIGHTING, DIFFUSERS, FIRE PROTECTION DEVICES, SPRINKLERS, AV SECURITY ITEMS, AND REQUIRED ACCESS PANELS TO ARCHITECT FOR REVIEW PRIOR TO FRAMING.
3. ALL SUSPENDED ACOUSTICAL CEILING TILE AND GRID TO BE ACP1, U.N.O.
4. ALL CEILING HEIGHTS ARE FROM TOP OF FINISHED FLOOR, U.N.O.
5. REFER TO ELECTRICAL DRAWINGS FOR LIGHT FIXTURES DESIGNATIONS AND SCHEDULE.
6. PROVIDE SWITCHES IN ALL ENCLOSED ROOMS AND MOTION SENSOR LIGHT SWITCHES IN EACH OFFICE PER APPLICABLE CODES AND REGULATIONS. REFER TO ELECTRICAL DRAWINGS.
7. GANG SWITCHES UNDER ONE COVER PLATE WHEN POSSIBLE. PLACE LIGHT SWITCH(S) PER DRAWINGS.
8. REFER TO MECHANICAL DRAWINGS FOR HVAC WORK AS REQUIRED. MECHANICAL ELEMENTS SHOWN ARE FOR LOCATION ONLY.
9. ALL SPRINKLER HEADS TO BE CENTERED IN ACOUSTICAL PANELS, U.N.O. CONCEALED SPRINKLER HEAD COVERS TO BE WHITE IN TYPICAL CEILING AREAS OR CLG1 IN AREAS OPEN TO STRUCTURE ABOVE.
10. CENTER ALL CEILING DEVICES IN CENTER LINE OF LIGHT FICTURES WHERE GYP. BOARD CEILING IS INDICATED.
11. GWB SOFFIT @ 12'-0" AROUND THE BUILDING PERIMETER U.N.O - SEE WALL SECTIONS FOR DETAIL.
12. CEILING TO RUN CONTINUOUS AT DEMOUNTABLE PARTITIONS.

REFLECTED CEILING PLAN KEYNOTES:

1. CEILING MOUNTED SPEAKERS.

CEILING LEGEND

- SUSPENDED 2'-0" x 2'-0" ACOUSTICAL CEILING PANELS
- METAL PANEL
- GYPSUM BOARD CEILING
- EXPOSED UNDERSIDE OF FLOOR OR ROOF STRUCTURE
- RECESSED LIGHT FIXTURE 4'-0" x 2'-0"
- CHILLED BEAM 4'-0" x 2'-0"
- CHILLED BEAM 4'-0" x 0'-6"
- SUPPLY DIFFUSER 2'-0" x 2'-0"
- RETURN AIR 2'-0" x 2'-0"
- EXHAUST 2'-0" x 2'-0"
- LINEAR SLOT DIFFUSER
- 1'-0"x1'-0" SUPPLY DIFFUSER
- 1'-0"x1'-0" EXHAUST GRILL
- 6" WIDE LINEAR RETURN
- 6" WIDE LINEAR SUPPLY DIFFUSER
- 6" WIDE LINEAR SUPPLY DIFFUSER - SIDE
- STROBE SPEAKER - CEILING MOUNTED
- STROBE - CEILING MOUNTED
- OCCUPANCY SENSOR
- SPRINKLER - CEILING MOUNTED (130 SF/ SP. HEAD FOR ORDINARY HAZARD AREA, MIN. 6' APART)
- SPEAKER
- RECESSED DOWNLIGHTS
- RECESSED LINEAR LIGHT FIXTURE 4'-0" x 0'-4"
- RECESSED WALL WASHER 4'-0" x 0'-4"
- CEILING MOUNTED PROJECTOR & CEILING RECESSED PROJECTION SCREEN (GFCI)
- MANUAL ROLLER SHADE
- MS — MOTORIZED ROLLER SHADE
- BS — MOTORIZED BALCK-OUT & ROLLER SHADE
- WALL-MOUNTED/ CEILING-MOUNTED EXIT SIGN
- LED STRIP LIGHTING CEILING MOUNTED
- LED STRIP LIGHTING ABOVE CEILING
- ACCESS PANEL
- FAN COIL UNIT
- LCD DISPLAY

100% SUBMITTAL

NORTH

1/8"=1'-0" 8' 4' 0 8' 16'

AECOM

AECOM TECHNICAL SERVICES, INC.
3101 WILSON BOULEVARD
SUITE 900
ARLINGTON, VA 22201

T: 703-682-4900 F: 703.682.4901
www.aecom.com

SEAL AREA

BOARD OF ARCHITECTS 10304 EDWARD W. WEBB STATE OF MARYLAND

KEY PLAN

SEGMENT - A

REV	DATE	DESCRIPTION	S&R BR.	CUSTOMER	PM	SECT. HEAD

	INITIALS	DATE
DRAWN BY	LA/NS	
CHECKED BY	BW/MW	
A-E MANAGER	EW	
ENVIRONMENTAL BRANCH	JH	
SAFETY BRANCH	CS	
CM	MMD	
PM	RWP	
CUSTOMER	JWB	
ENG. BRANCH	DGL	
ARCHITECTURE		

LEVEL 1 - REFLECTED CEILING PLAN SEGMENT A

A-201a

FLIGHT PROJECTS BUILDING

NATIONAL AERONAUTICS AND SPACE ADMINISTRATION

GODDARD SPACE FLIGHT CENTER GREENBELT, MARYLAND
FACILITIES MANAGEMENT DIVISION

DATE ISSUED	CoF CODE OR WR#	AECOM PROJECT NO.	SCALE
10/12/2012	12GXAZ	60187636	1/8" = 1'-0"

FILE DATE: 10/11/2012 3:56:08 PM

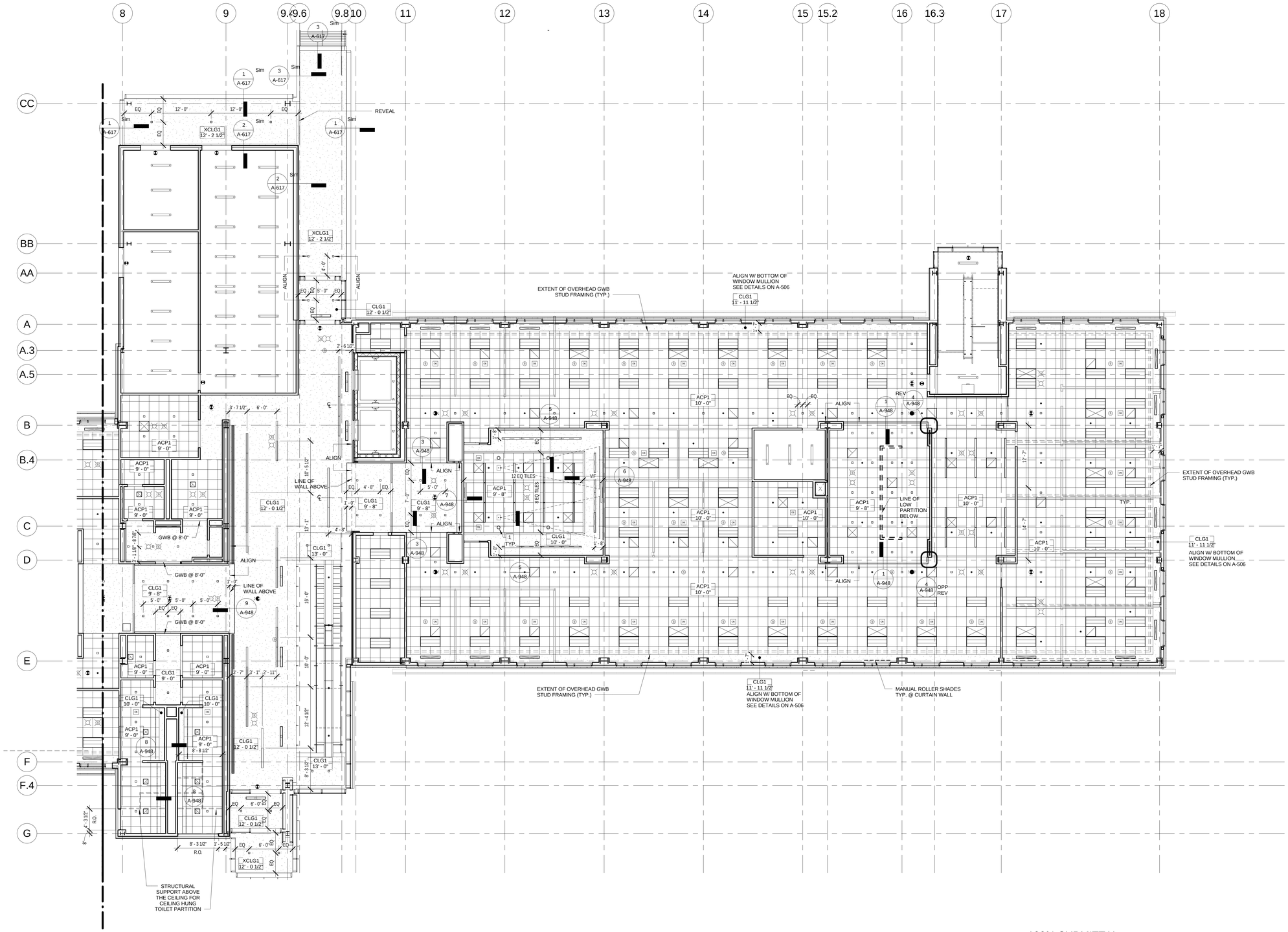

1 LEVEL 1 - REFLECTED CEILING PLAN SEGMENT B

A-201b REF. A-301 SCALE: 1/8" = 1'-0"

XCLG1
12' - 0 1/2" A.F.F.

REFLECTED CEILING PLAN GENERAL NOTES:

1. ALL PERIMETER OFFICES TO BE @ 10'-0" U.N.O.
2. ALL MECHANICAL, ELECTRICAL AND PLUMBING WORK LOCATED ABOVE GYP. BOARD CEILINGS SHALL BE LOCATED TO MINIMIZE REQUIRED ACCESS TO INACCESSIBLE CEILING. GC TO SUBMIT COORDINATED LAYOUT DRAWINGS OF ALL LOCATIONS OF LIGHTING, DIFFUSERS, FIRE PROTECTION DEVICES, SPRINKLERS, AV SECURITY ITEMS, AND REQUIRED ACCESS PANELS TO ARCHITECT FOR REVIEW PRIOR TO FRAMING.
3. ALL SUSPENDED ACOUSTICAL CEILING TILE AND GRID TO BE ACP1, U.N.O.
4. ALL CEILING HEIGHTS ARE FROM TOP OF FINISHED FLOOR, U.N.O.
5. REFER TO ELECTRICAL DRAWINGS FOR LIGHT FIXTURES DESIGNATIONS AND SCHEDULE.
6. PROVIDE SWITCHES IN ALL ENCLOSED ROOMS AND MOTION SENSOR LIGHT SWITCHES IN EACH OFFICE PER APPLICABLE CODES AND REGULATIONS. REFER TO ELECTRICAL DRAWINGS.
7. GANG SWITCHES UNDER ONE COVER PLATE WHEN POSSIBLE. PLACE LIGHT SWITCH(S) PER DRAWINGS.
8. REFER TO MECHANICAL DRAWINGS FOR HVAC WORK AS REQUIRED. MECHANICAL ELEMENTS SHOWN ARE FOR LOCATION ONLY.
9. ALL SPRINKLER HEADS TO BE CENTERED IN ACOUSTICAL PANELS, U.N.O. CONCEALED SPRINKLER HEAD COVERS TO BE WHITE IN TYPICAL CEILING AREAS OR CLG1 IN AREAS OPEN TO STRUCTURE ABOVE.
10. CENTER ALL CEILING DEVICES IN CENTER LINE OF LIGHT FICTURES WHERE GYP. BOARD CEILING IS INDICATED.
11. GWB SOFFIT @ 12'-0" AROUND THE BUILDING PERIMETER U.N.O - SEE WALL SECTIONS FOR DETAIL.
12. CEILING TO RUN CONTINUOUS AT DEMOUNTABLE PARTITIONS.

REFLECTED CEILING PLAN KEYNOTES:

1. CEILING MOUNTED SPEAKERS.

CEILING LEGEND

- SUSPENDED 2'-0" x 2'-0" ACOUSTICAL CEILING PANELS
- METAL PANEL
- GYPSUM BOARD CEILING
- EXPOSED UNDERSIDE OF FLOOR OR ROOF STRUCTURE
- RECESSED LIGHT FIXTURE 4'-0" x 2'-0"
- CHILLED BEAM 4'-0" x 2'-0"
- CHILLED BEAM 4'-0" x 0'-6"
- SUPPLY DIFFUSER 2'-0" x 2'-0"
- RETURN AIR 2'-0" x 2'-0"
- EXHAUST 2'-0" x 2'-0"
- LINEAR SLOT DIFFUSER
- 1'-0"x1'-0" SUPPLY DIFFUSER
- 1'-0"x1'-0" EXHAUST GRILL
- 6" WIDE LINEAR RETURN
- 6" WIDE LINEAR SUPPLY DIFFUSER
- 6" WIDE LINEAR SUPPLY DIFFUSER - SIDE
- STROBE SPEAKER - CEILING MOUNTED
- STROBE - CEILING MOUNTED
- OCCUPANCY SENSOR
- SPRINKLER - CEILING MOUNTED (130/ SP, HEAD FOR ORDINARY HAZARD AREA, MIN. 6' APART)
- SPEAKER
- RECESSED DOWNLIGHTS
- RECESSED LINEAR LIGHT FIXTURE 4'-0" x 0'-4"
- RECESSED WALL WASHER 4'-0" x 0'-4"
- CEILING MOUNTED PROJECTOR & CEILING RECESSED PROJECTION SCREEN (GFCI)
- MANUAL ROLLER SHADE
- MS — MOTORIZED ROLLER SHADE
- BS — MOTORIZED BALCK-OUT & ROLLER SHADE
- WALL-MOUNTED/ CEILING-MOUNTED EXIT SIGN
- LED STRIP LIGHTING CEILING MOUNTED
- LED STRIP LIGHTING ABOVE CEILING
- ACCESS PANEL
- FAN COIL UNIT
- LCD DISPLAY

100% SUBMITTAL

NORTH

1/8"=1'-0" 8' 4' 0 8' 16'

AECOM
AECOM TECHNICAL SERVICES, INC.
3101 WILSON BOULEVARD
SUITE 900
ARLINGTON, VA 22201
T: 703-682-4900 F: 703.682.4901
www.aecom.com

SEAL AREA

BOARD OF ARCHITECTS
EDWARD WEBB
STATE OF MARYLAND

KEY PLAN

SEGMENT - B

REV	DATE	DESCRIPTION	S&R BR.	CUSTOMER	PM	SECT. HEAD

	INITIALS	DATE
DRAWN BY	LA/NS	
CHECKED BY	BW/MW	
A-E MANAGER	EW	
ENVIRONMENTAL BRANCH	JH	
SAFETY BRANCH	CS	
CM	MMD	
PM	RWP	
CUSTOMER	JWB	
ENG. BRANCH	DGL	
ARCHITECTURE		

LEVEL 1 - REFLECTED CEILING PLAN SEGMENT B

A-201b

FLIGHT PROJECTS BUILDING

NATIONAL AERONAUTICS AND SPACE ADMINISTRATION
GODDARD SPACE FLIGHT CENTER GREENBELT, MARYLAND
FACILITIES MANAGEMENT DIVISION

DATE ISSUED	CoF CODE OR WR#	AECOM PROJECT NO.	SCALE
10/12/2012	12GXAZ	60187636	1/8" = 1'-0"

FILE DATE: 10/11/2012 3:56:24 PM

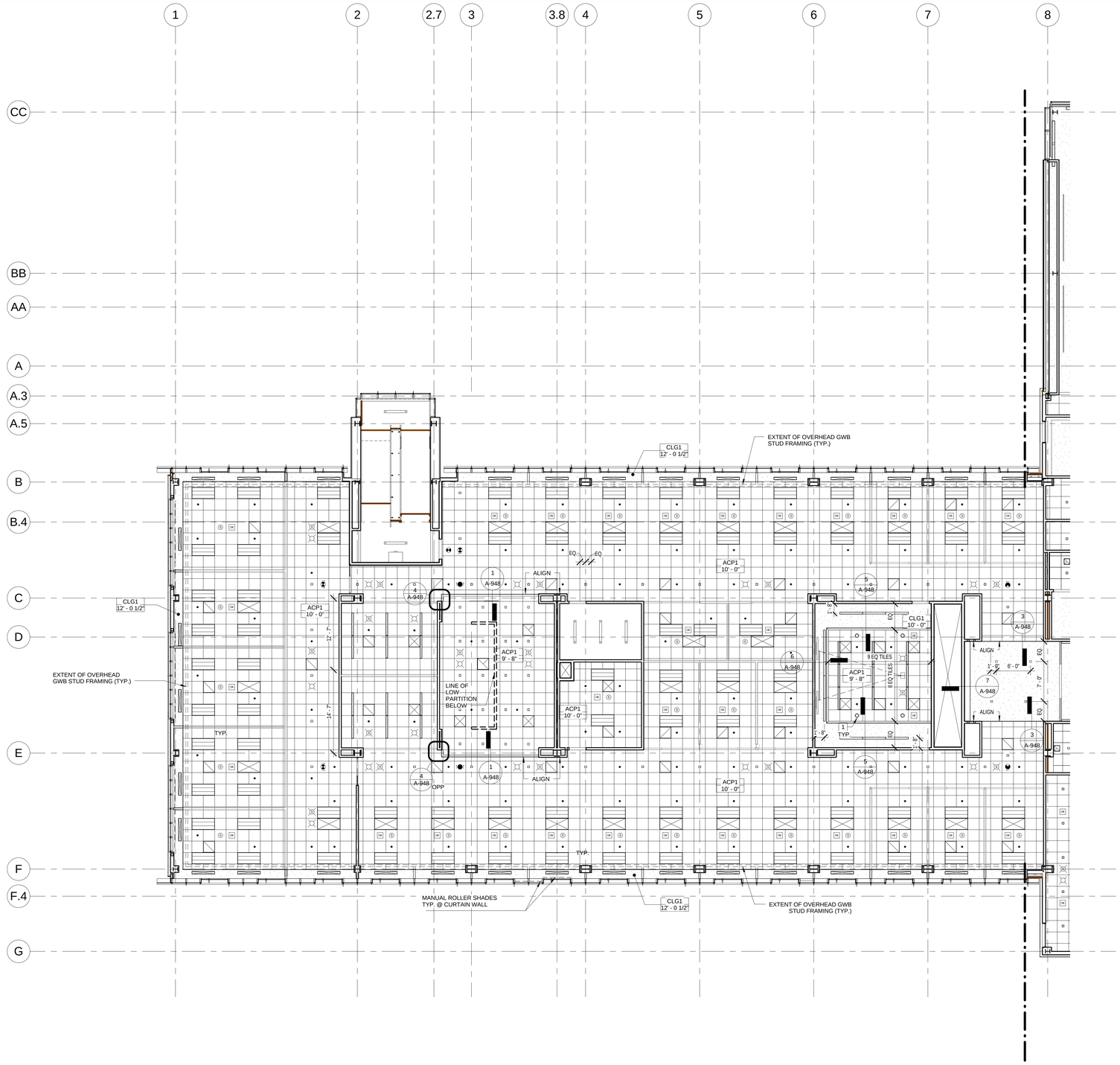

LEVEL 2 - REFLECTED CEILING PLAN SEGMENT A

1 | A-202a | REF. A-301 | SCALE: 1/8" = 1'-0"

REFLECTED CEILING PLAN GENERAL NOTES:

1. ALL PERIMETER OFFICES TO BE @ 10'-0" U.N.O.
2. ALL MECHANICAL, ELECTRICAL AND PLUMBING WORK LOCATED ABOVE GYP. BOARD CEILINGS SHALL BE LOCATED TO MINIMIZE REQUIRED ACCESS TO INACCESSIBLE CEILING. GC TO SUBMIT COORDINATED LAYOUT DRAWINGS OF ALL LOCATIONS OF LIGHTING, DIFFUSERS, FIRE PROTECTION DEVICES, SPRINKLERS, AV SECURITY ITEMS, AND REQUIRED ACCESS PANELS TO ARCHITECT FOR REVIEW PRIOR TO FRAMING.
3. ALL SUSPENDED ACOUSTICAL CEILING TILE AND GRID TO BE ACP1, U.N.O.
4. ALL CEILING HEIGHTS ARE FROM TOP OF FINISHED FLOOR, U.N.O.
5. REFER TO ELECTRICAL DRAWINGS FOR LIGHT FIXTURES DESIGNATIONS AND SCHEDULE.
6. PROVIDE SWITCHES IN ALL ENCLOSED ROOMS AND MOTION SENSOR LIGHT SWITCHES IN EACH OFFICE PER APPLICABLE CODES AND REGULATIONS. REFER TO ELECTRICAL DRAWINGS.
7. GANG SWITCHES UNDER ONE COVER PLATE WHEN POSSIBLE. PLACE LIGHT SWITCH(S) PER DRAWINGS.
8. REFER TO MECHANICAL DRAWINGS FOR HVAC WORK AS REQUIRED. MECHANICAL ELEMENTS SHOWN ARE FOR LOCATION ONLY.
9. ALL SPRINKLER HEADS TO BE CENTERED IN ACOUSTICAL PANELS, U.N.O. CONCEALED SPRINKLER HEAD COVERS TO BE WHITE IN TYPICAL CEILING AREAS OR CLG1 IN AREAS OPEN TO STRUCTURE ABOVE.
10. CENTER ALL CEILING DEVICES IN CENTER LINE OF LIGHT FICTURES WHERE GYP. BOARD CEILING IS INDICATED.
11. GWB SOFFIT @ 12'-0" AROUND THE BUILDING PERIMETER U.N.O - SEE WALL SECTIONS FOR DETAIL.
12. CEILING TO RUN CONTINUOUS AT DEMOUNTABLE PARTITIONS.

REFLECTED CEILING PLAN KEYNOTES:

1. CEILING MOUNTED SPEAKERS.

CEILING LEGEND

- SUSPENDED 2'-0" x 2'-0" ACOUSTICAL CEILING PANELS
- METAL PANEL
- GYPSUM BOARD CEILING
- EXPOSED UNDERSIDE OF FLOOR OR ROOF STRUCTURE
- RECESSED LIGHT FIXTURE 4'-0" x 2'-0"
- CHILLED BEAM 4'-0" x 2'-0"
- CHILLED BEAM 4'-0" x 0'-6"
- SUPPLY DIFFUSER 2'-0" x 2'-0"
- RETURN AIR 2'-0" x 2'-0"
- EXHAUST 2'-0" x 2'-0"
- LINEAR SLOT DIFFUSER
- 1'-0"x1'-0" SUPPLY DIFFUSER
- 1'-0"x1'-0" EXHAUST GRILL
- 6" WIDE LINEAR RETURN
- 6" WIDE LINEAR SUPPLY DIFFUSER
- 6" WIDE LINEAR SUPPLY DIFFUSER - SIDE
- STROBE SPEAKER - CEILING MOUNTED
- STROBE - CEILING MOUNTED
- OCCUPANCY SENSOR
- SPRINKLER - CEILING MOUNTED (130 SF/ SP. HEAD FOR ORDINARY HAZARD AREA, MIN. 6' APART)
- SPEAKER
- RECESSED DOWNLIGHTS
- RECESSED LINEAR LIGHT FIXTURE 4'-0" x 0'-4"
- RECESSED WALL WASHER 4'-0" x 0'-4"
- CEILING MOUNTED PROJECTOR & CEILING RECESSED PROJECTION SCREEN (GFCI)
- MANUAL ROLLER SHADE
- MS — MOTORIZED ROLLER SHADE
- BS — MOTORIZED BALCK-OUT & ROLLER SHADE
- WALL-MOUNTED/ CEILING-MOUNTED EXIT SIGN
- LED STRIP LIGHTING CEILING MOUNTED
- LED STRIP LIGHTING ABOVE CEILING
- ACCESS PANEL
- FAN COIL UNIT
- LCD DISPLAY

100% SUBMITTAL

NORTH

1/8"=1'-0" 8' 4' 0 8' 16'

AECOM

AECOM TECHNICAL SERVICES, INC.
3101 WILSON BOULEVARD
SUITE 900
ARLINGTON, VA 22201

T: 703-682-4900 F: 703.682.4901
www.aecom.com

SEAL AREA

BOARD OF ARCHITECTS 10 0004 ERIC W. WARNER REGISTERED ARCHITECT STATE OF MARYLAND

KEY PLAN

SEGMENT - A

REV	DATE	DESCRIPTION	S&R BR.	CUSTOMER	PM	SECT. HEAD

	INITIALS	DATE
DRAWN BY	LA/NS	
CHECKED BY	BW/MW	
A-E MANAGER	EW	
ENVIRONMENTAL BRANCH	JH	
SAFETY BRANCH	CS	
CM	MMD	
PM	RWP	
CUSTOMER	JWB	
ENG. BRANCH	DGL	
ARCHITECTURE		

LEVEL 2 - REFLECTED CEILING PLAN SEGMENT A

A-202a

FLIGHT PROJECTS BUILDING

NATIONAL AERONAUTICS AND SPACE ADMINISTRATION

GODDARD SPACE FLIGHT CENTER GREENBELT, MARYLAND
FACILITIES MANAGEMENT DIVISION

DATE ISSUED	CoF CODE OR W/O#	AECOM PROJECT NO.	SCALE
10/12/2012	12GXAZ	60187636	1/8" = 1'-0"

FILE DATE: 10/11/2012 3:56:40 PM

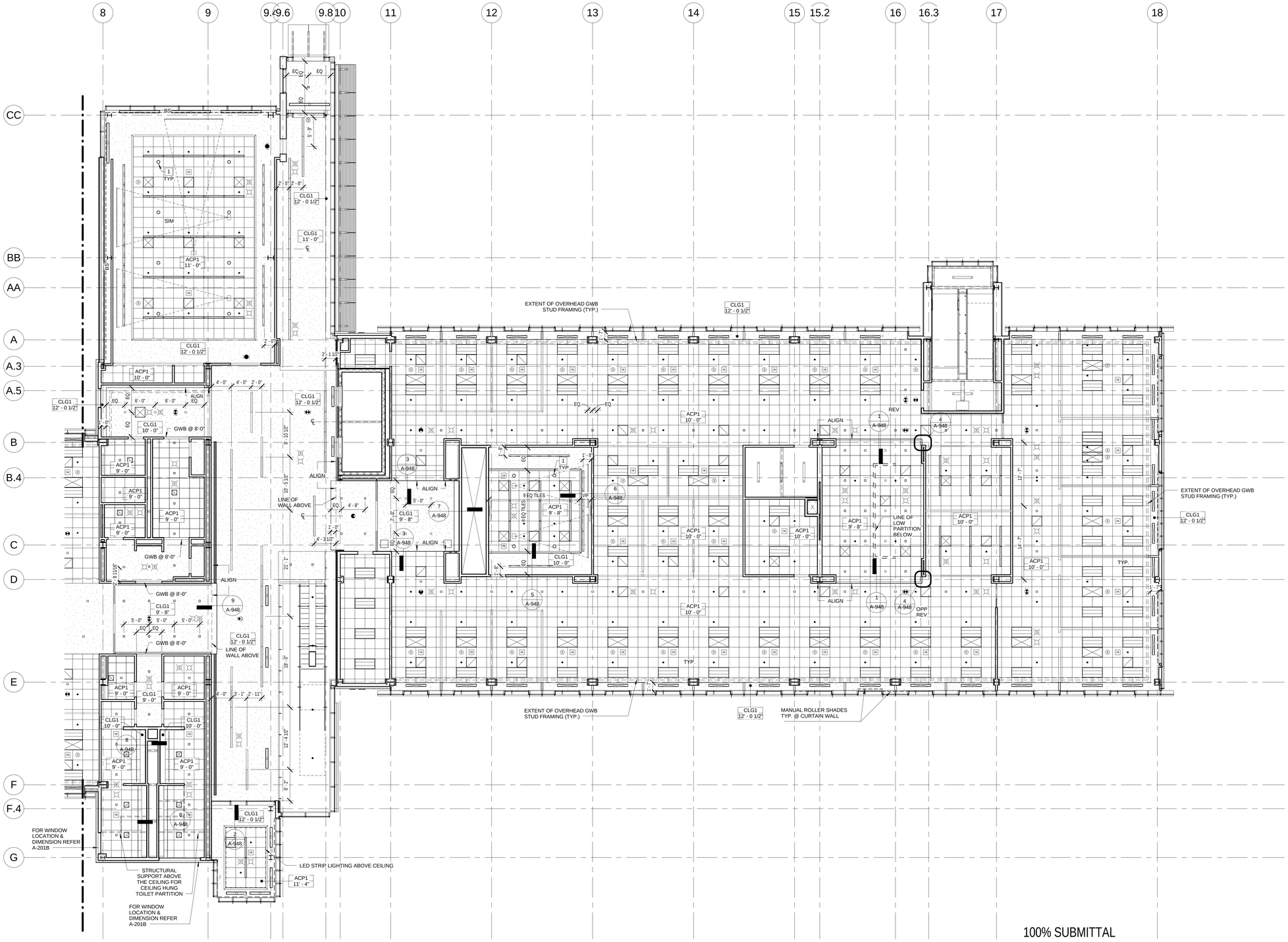

1 LEVEL 2 - REFLECTED CEILING PLAN SEGMENT B

A-202b REF. A-301 SCALE: 1/8" = 1'-0"

REFLECTED CEILING PLAN GENERAL NOTES:

1. ALL PERIMETER OFFICES TO BE @ 10'-0" U.N.O.
2. ALL MECHANICAL, ELECTRICAL AND PLUMBING WORK LOCATED ABOVE GYP. BOARD CEILINGS SHALL BE LOCATED TO MINIMIZE REQUIRED ACCESS TO INACCESSIBLE CEILING. GC TO SUBMIT COORDINATED LAYOUT DRAWINGS OF ALL LOCATIONS OF LIGHTING, DIFFUSERS, FIRE PROTECTION DEVICES, SPRINKLERS, AV SECURITY ITEMS, AND REQUIRED ACCESS PANELS TO ARCHITECT FOR REVIEW PRIOR TO FRAMING.
3. ALL SUSPENDED ACOUSTICAL CEILING TILE AND GRID TO BE ACP1, U.N.O.
4. ALL CEILING HEIGHTS ARE FROM TOP OF FINISHED FLOOR, U.N.O.
5. REFER TO ELECTRICAL DRAWINGS FOR LIGHT FIXTURES DESIGNATIONS AND SCHEDULE.
6. PROVIDE SWITCHES IN ALL ENCLOSED ROOMS AND MOTION SENSOR LIGHT SWITCHES IN EACH OFFICE PER APPLICABLE CODES AND REGULATIONS. REFER TO ELECTRICAL DRAWINGS.
7. GANG SWITCHES UNDER ONE COVER PLATE WHEN POSSIBLE. PLACE LIGHT SWITCH(S) PER DRAWINGS.
8. REFER TO MECHANICAL DRAWINGS FOR HVAC WORK AS REQUIRED. MECHANICAL ELEMENTS SHOWN ARE FOR LOCATION ONLY.
9. ALL SPRINKLER HEADS TO BE CENTERED IN ACOUSTICAL PANELS, U.N.O. CONCEALED SPRINKLER HEAD COVERS TO BE WHITE IN TYPICAL CEILING AREAS OR CLG1 IN AREAS OPEN TO STRUCTURE ABOVE.
10. CENTER ALL CEILING DEVICES IN CENTER LINE OF LIGHT FICTURES WHERE GYP. BOARD CEILING IS INDICATED.
11. GWB SOFFIT @ 12'-0" AROUND THE BUILDING PERIMETER U.N.O - SEE WALL SECTIONS FOR DETAIL.
12. CEILING TO RUN CONTINUOUS AT DEMOUNTABLE PARTITIONS.

REFLECTED CEILING PLAN KEYNOTES:

1. CEILING MOUNTED SPEAKERS.

CEILING LEGEND

- SUSPENDED 2'-0" x 2'-0" ACOUSTICAL CEILING PANELS
- METAL PANEL
- GYPSUM BOARD CEILING
- EXPOSED UNDERSIDE OF FLOOR OR ROOF STRUCTURE
- RECESSED LIGHT FIXTURE 4'-0" x 2'-0"
- CHILLED BEAM 4'-0" x 2'-0"
- CHILLED BEAM 4'-0" x 0'-6"
- SUPPLY DIFFUSER 2'-0" x 2'-0"
- RETURN AIR 2'-0" x 2'-0"
- EXHAUST 2'-0" x 2'-0"
- LINEAR SLOT DIFFUSER
- 1'-0"x1'-0" SUPPLY DIFFUSER
- 1'-0"x1'-0" EXHAUST GRILL
- 6" WIDE LINEAR RETURN
- 6" WIDE LINEAR SUPPLY DIFFUSER
- 6" WIDE LINEAR SUPPLY DIFFUSER - SIDE
- STROBE SPEAKER - CEILING MOUNTED
- STROBE - CEILING MOUNTED
- OCCUPANCY SENSOR
- SPRINKLER - CEILING MOUNTED (130 SF/ SP. HEAD FOR ORDINARY HAZARD AREA, MIN. 6' APART)
- SPEAKER
- RECESSED DOWNLIGHTS
- RECESSED LINEAR LIGHT FIXTURE 4'-0" x 0'-4"
- RECESSED WALL WASHER 4'-0" x 0'-4"
- CEILING MOUNTED PROJECTOR & CEILING RECESSED PROJECTION SCREEN (GFCI)
- MANUAL ROLLER SHADE
- MS — MOTORIZED ROLLER SHADE
- BS — MOTORIZED BALCK-OUT & ROLLER SHADE
- WALL-MOUNTED/ CEILING-MOUNTED EXIT SIGN
- LED STRIP LIGHTING CEILING MOUNTED
- LED STRIP LIGHTING ABOVE CEILING
- ACCESS PANEL
- FAN COIL UNIT
- LCD DISPLAY

100% SUBMITTAL

NORTH

1/8"=1'-0" 8' 4' 0 8' 16'

AECOM
AECOM TECHNICAL SERVICES, INC.
3101 WILSON BOULEVARD
SUITE 900
ARLINGTON, VA 22201
T: 703-682-4900 F: 703.682.4901
www.aecom.com

SEAL AREA

BOARD OF ARCHITECTS 10984 ERNESTO WEIL STATE OF MARYLAND

KEY PLAN

SEGMENT - B

REV	DATE	DESCRIPTION	S&B BR.	CUSTOMER	PM	SECT. HEAD

	INITIALS	DATE
DRAWN BY	LA/NS	
CHECKED BY	BW/MW	
A-E MANAGER	EW	
ENVIRONMENTAL BRANCH	JH	
SAFETY BRANCH	CS	
CM	MMD	
PM	RWP	
CUSTOMER	JWB	
ENG. BRANCH	DGL	
ARCHITECTURE		

LEVEL 2 - REFLECTED CEILING PLAN SEGMENT B

A-202b

FLIGHT PROJECTS BUILDING

NATIONAL AERONAUTICS AND SPACE ADMINISTRATION

GODDARD SPACE FLIGHT CENTER GREENBELT, MARYLAND
FACILITIES MANAGEMENT DIVISION

DATE ISSUED	CoF CODE OR WR#	AECOM PROJECT NO.	SCALE
10/12/2012	12GXAZ	60187636	1/8" = 1'-0"

FILE DATE: 10/11/2012 3:57:05 PM

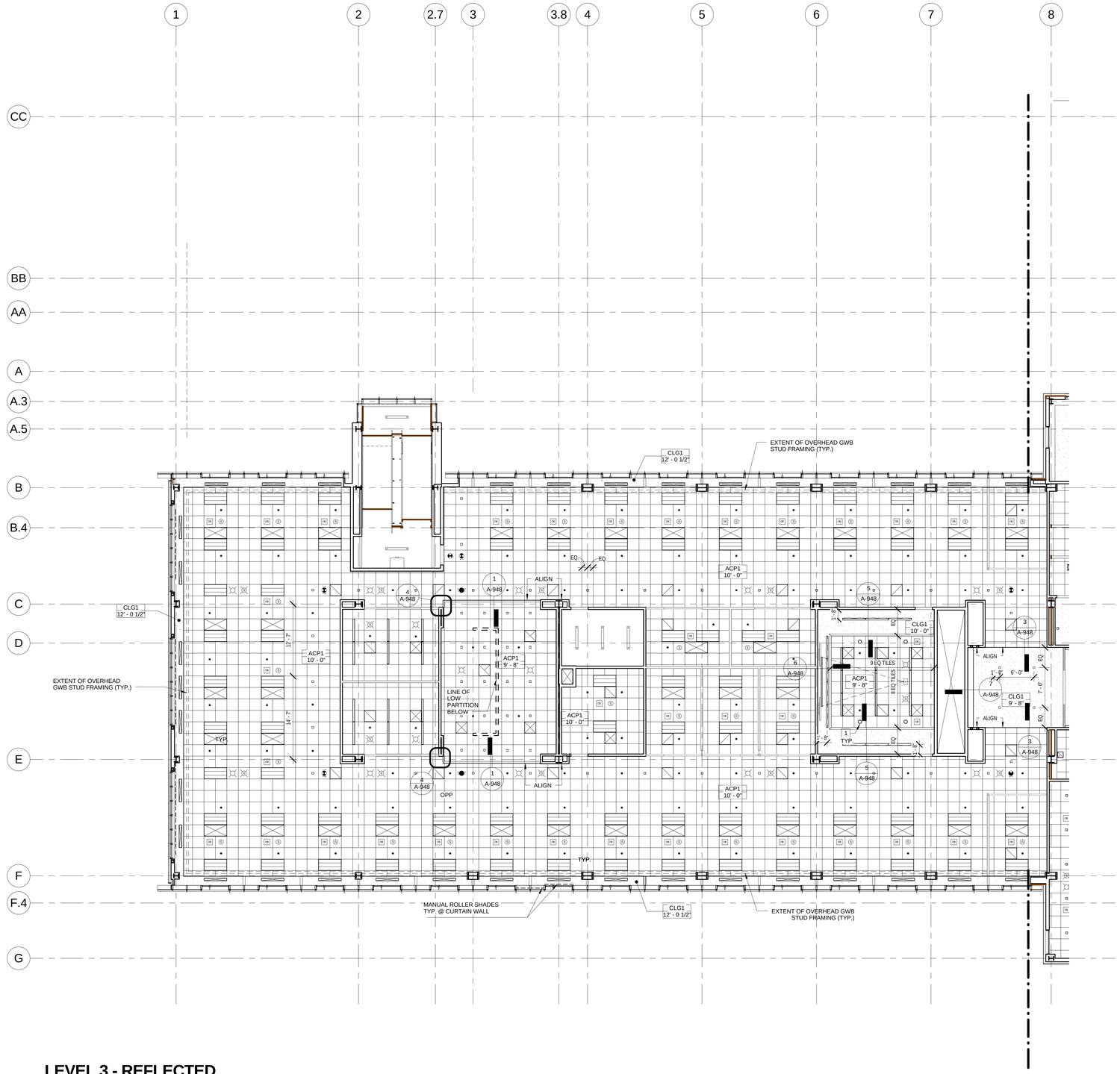

LEVEL 3 - REFLECTED CEILING PLAN SEGMENT A

1 | A-203a REF. A-301 SCALE: 1/8" = 1'-0"

REFLECTED CEILING PLAN GENERAL NOTES:

1. ALL PERIMETER OFFICES TO BE @ 10'-0" U.N.O.
2. ALL MECHANICAL, ELECTRICAL AND PLUMBING WORK LOCATED ABOVE GYP. BOARD CEILINGS SHALL BE LOCATED TO MINIMIZE REQUIRED ACCESS TO INACCESSIBLE CEILING. GC TO SUBMIT COORDINATED LAYOUT DRAWINGS OF ALL LOCATIONS OF LIGHTING, DIFFUSERS, FIRE PROTECTION DEVICES, SPRINKLERS, AV SECURITY ITEMS, AND REQUIRED ACCESS PANELS TO ARCHITECT FOR REVIEW PRIOR TO FRAMING.
3. ALL SUSPENDED ACOUSTICAL CEILING TILE AND GRID TO BE ACP1, U.N.O.
4. ALL CEILING HEIGHTS ARE FROM TOP OF FINISHED FLOOR, U.N.O.
5. REFER TO ELECTRICAL DRAWINGS FOR LIGHT FIXTURES DESIGNATIONS AND SCHEDULE.
6. PROVIDE SWITCHES IN ALL ENCLOSED ROOMS AND MOTION SENSOR LIGHT SWITCHES IN EACH OFFICE PER APPLICABLE CODES AND REGULATIONS. REFER TO ELECTRICAL DRAWINGS.
7. GANG SWITCHES UNDER ONE COVER PLATE WHEN POSSIBLE. PLACE LIGHT SWITCH(S) PER DRAWINGS.
8. REFER TO MECHANICAL DRAWINGS FOR HVAC WORK AS REQUIRED. MECHANICAL ELEMENTS SHOWN ARE FOR LOCATION ONLY.
9. ALL SPRINKLER HEADS TO BE CENTERED IN ACOUSTICAL PANELS, U.N.O. CONCEALED SPRINKLER HEAD COVERS TO BE WHITE IN TYPICAL CEILING AREAS OR CLG1 IN AREAS OPEN TO STRUCTURE ABOVE.
10. CENTER ALL CEILING DEVICES IN CENTER LINE OF LIGHT FICTURES WHERE GYP. BOARD CEILING IS INDICATED.
11. GWB SOFFIT @ 12'-0" AROUND THE BUILDING PERIMETER U.N.O - SEE WALL SECTIONS FOR DETAIL.
12. CEILING TO RUN CONTINUOUS AT DEMOUNTABLE PARTITIONS.

REFLECTED CEILING PLAN KEYNOTES:

1. CEILING MOUNTED SPEAKERS.

CEILING LEGEND

- SUSPENDED 2'-0" x 2'-0" ACOUSTICAL CEILING PANELS
- METAL PANEL
- GYPSUM BOARD CEILING
- EXPOSED UNDERSIDE OF FLOOR OR ROOF STRUCTURE
- RECESSED LIGHT FIXTURE 4'-0" x 2'-0"
- CHILLED BEAM 4'-0" x 2'-0"
- CHILLED BEAM 4'-0" x 0'-6"
- SUPPLY DIFFUSER 2'-0" x 2'-0"
- RETURN AIR 2'-0" x 2'-0"
- EXHAUST 2'-0" x 2'-0"
- LINEAR SLOT DIFFUSER
- 1'-0"x1'-0" SUPPLY DIFFUSER
- 1'-0"x1'-0" EXHAUST GRILL
- 6" WIDE LINEAR RETURN
- 6" WIDE LINEAR SUPPLY DIFFUSER
- 6" WIDE LINEAR SUPPLY DIFFUSER - SIDE
- STROBE SPEAKER - CEILING MOUNTED
- STROBE - CEILING MOUNTED
- OCCUPANCY SENSOR
- SPRINKLER - CEILING MOUNTED (130 SF/ SP. HEAD FOR ORDINARY HAZARD AREA, MIN. 6' APART)
- SPEAKER
- RECESSED DOWNLIGHTS
- RECESSED LINEAR LIGHT FIXTURE 4'-0" x 0'-4"
- RECESSED WALL WASHER 4'-0" x 0'-4"
- CEILING MOUNTED PROJECTOR & CEILING RECESSED PROJECTION SCREEN (GFCI)
- MANUAL ROLLER SHADE
- MS — MOTORIZED ROLLER SHADE
- BS — MOTORIZED BALCK-OUT & ROLLER SHADE
- WALL-MOUNTED/ CEILING-MOUNTED EXIT SIGN
- LED STRIP LIGHTING CEILING MOUNTED
- LED STRIP LIGHTING ABOVE CEILING
- ACCESS PANEL
- FAN COIL UNIT
- LCD DISPLAY

100% SUBMITTAL

NORTH

1/8"=1'-0" 8' 4' 0 8' 16'

AECOM

AECOM TECHNICAL SERVICES, INC.
3101 WILSON BOULEVARD
SUITE 900
ARLINGTON, VA 22201

T: 703-682-4900 F: 703.682.4901
www.aecom.com

SEAL AREA

BOARD OF ARCHITECTS 10084 EDWARD W. WEBB STATE OF MARYLAND

KEY PLAN

SEGMENT - A

REV	DATE	DESCRIPTION	S&R BR.	CUSTOMER	PM	SECT. HEAD

	INITIALS	DATE
DRAWN BY	LA/NS	
CHECKED BY	BW/MW	
A-E MANAGER	EW	
ENVIRONMENTAL BRANCH	JH	
SAFETY BRANCH	CS	
CM	MMD	
PM	RWP	
CUSTOMER	JWB	
ENG. BRANCH	DGL	
ARCHITECTURE		

LEVEL 3 - REFLECTED CEILING PLAN SEGMENT A

A-203a

FLIGHT PROJECTS BUILDING

NATIONAL AERONAUTICS AND SPACE ADMINISTRATION

GODDARD SPACE FLIGHT CENTER GREENBELT, MARYLAND
FACILITIES MANAGEMENT DIVISION

DATE ISSUED	CoF CODE OR WR#	AECOM PROJECT NO.	SCALE
10/12/2012	12GXAZ	60187636	1/8" = 1'-0"

FILE DATE: 10/11/2012 3:57:23 PM

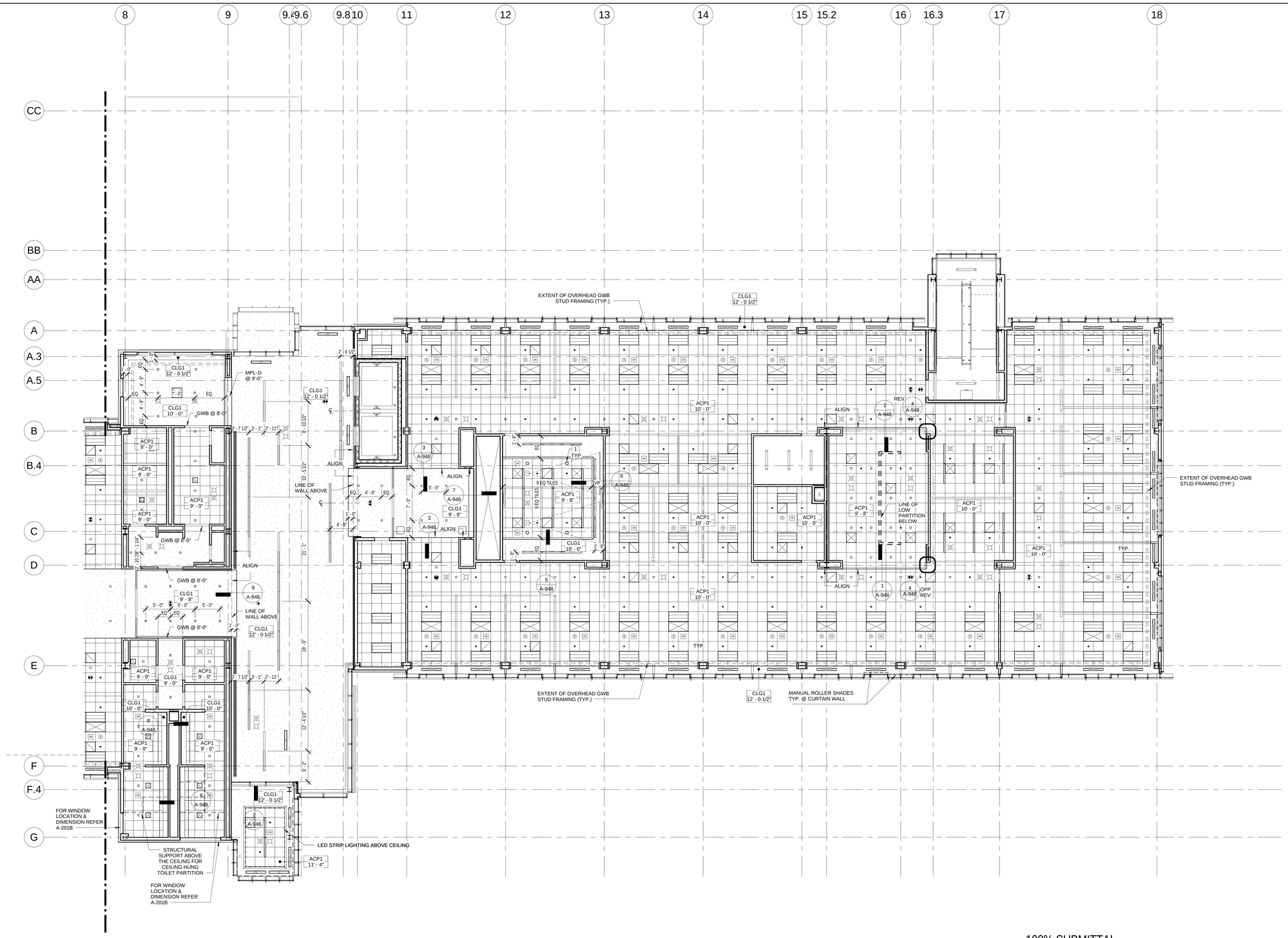

LEVEL 3 - REFLECTED CEILING PLAN SEGMENT B

1 A-203b REF. A-301 SCALE: 1/8" = 1'-0"

REFLECTED CEILING PLAN GENERAL NOTES:

1. ALL PERIMETER OFFICES TO BE @ 10'-0" U.N.O.
2. ALL MECHANICAL, ELECTRICAL AND PLUMBING WORK LOCATED ABOVE GYP. BOARD CEILINGS SHALL BE LOCATED TO MINIMIZE REQUIRED ACCESS TO INACCESSIBLE CEILING. GC TO SUBMIT COORDINATED LAYOUT DRAWINGS OF ALL LOCATIONS OF LIGHTING, DIFFUSERS, FIRE PROTECTION DEVICES, SPRINKLERS, AV SECURITY ITEMS, AND REQUIRED ACCESS PANELS TO ARCHITECT FOR REVIEW PRIOR TO FRAMING.
3. ALL SUSPENDED ACOUSTICAL CEILING TILE AND GRID TO BE ACP1, U.N.O.
4. ALL CEILING HEIGHTS ARE FROM TOP OF FINISHED FLOOR, U.N.O.
5. REFER TO ELECTRICAL DRAWINGS FOR LIGHT FIXTURES DESIGNATIONS AND SCHEDULE.
6. PROVIDE SWITCHES IN ALL ENCLOSED ROOMS AND MOTION SENSOR LIGHT SWITCHES IN EACH OFFICE PER APPLICABLE CODES AND REGULATIONS. REFER TO ELECTRICAL DRAWINGS.
7. GANG SWITCHES UNDER ONE COVER PLATE WHEN POSSIBLE. PLACE LIGHT SWITCH(S) PER DRAWINGS.
8. REFER TO MECHANICAL DRAWINGS FOR HVAC WORK AS REQUIRED. MECHANICAL ELEMENTS SHOWN ARE FOR LOCATION ONLY.
9. ALL SPRINKLER HEADS TO BE CENTERED IN ACOUSTICAL PANELS, U.N.O. CONCEALED SPRINKLER HEAD COVERS TO BE WHITE IN TYPICAL CEILING AREAS OR CLG1 IN AREAS OPEN TO STRUCTURE ABOVE.
10. CENTER ALL CEILING DEVICES IN CENTER LINE OF LIGHT FICTURES WHERE GYP. BOARD CEILING IS INDICATED.
11. GWB SOFFIT @ 12'-0" AROUND THE BUILDING PERIMETER U.N.O - SEE WALL SECTIONS FOR DETAIL.
12. CEILING TO RUN CONTINUOUS AT DEMOUNTABLE PARTITIONS.

REFLECTED CEILING PLAN KEYNOTES:

1. CEILING MOUNTED SPEAKERS.

CEILING LEGEND

- SUSPENDED 2'-0" x 2'-0" ACOUSTICAL CEILING PANELS
- METAL PANEL
- GYPSUM BOARD CEILING
- EXPOSED UNDERSIDE OF FLOOR OR ROOF STRUCTURE
- RECESSED LIGHT FIXTURE 4'-0" x 2'-0"
- CHILLED BEAM 4'-0" x 2'-0"
- CHILLED BEAM 4'-0" x 0'-6"
- SUPPLY DIFFUSER 2'-0" x 2'-0"
- RETURN AIR 2'-0" x 2'-0"
- EXHAUST 2'-0" x 2'-0"
- LINEAR SLOT DIFFUSER
- 1'-0"x1'-0" SUPPLY DIFFUSER
- 1'-0"x1'-0" EXHAUST GRILL
- 6" WIDE LINEAR RETURN
- 6" WIDE LINEAR SUPPLY DIFFUSER
- 6" WIDE LINEAR SUPPLY DIFFUSER - SIDE
- STROBE SPEAKER - CEILING MOUNTED
- STROBE - CEILING MOUNTED
- OCCUPANCY SENSOR
- SPRINKLER - CEILING MOUNTED (130 SF/ SP. HEAD FOR ORDINARY HAZARD AREA, MIN. 6' APART)
- SPEAKER
- RECESSED DOWNLIGHTS
- RECESSED LINEAR LIGHT FIXTURE 4'-0" x 0'-4"
- RECESSED WALL WASHER 4'-0" x 0'-4"
- CEILING MOUNTED PROJECTOR & CEILING RECESSED PROJECTION SCREEN (GFCI)
- MANUAL ROLLER SHADE
- MS — MOTORIZED ROLLER SHADE
- BS — MOTORIZED BALCK-OUT & ROLLER SHADE
- WALL-MOUNTED/ CEILING-MOUNTED EXIT SIGN
- LED STRIP LIGHTING CEILING MOUNTED
- LED STRIP LIGHTING ABOVE CEILING
- ACCESS PANEL
- FAN COIL UNIT
- LCD DISPLAY

100% SUBMITTAL

NORTH

1/8"=1'-0" 8' 4' 0 8' 16'

AECOM

AECOM TECHNICAL SERVICES, INC.
3101 WILSON BOULEVARD
SUITE 900
ARLINGTON, VA 22201

T: 703-682-4900 F: 703.682.4901
www.aecom.com

SEAL AREA

BOARD OF ARCHITECTS 10984 ERNESTO WEIR STATE OF MARYLAND

KEY PLAN

SEGMENT - B

REV	DATE	DESCRIPTION	S&R BR.	CUSTOMER	PM	SECT. HEAD

	INITIALS	DATE
DRAWN BY	LA/NS	
CHECKED BY	BW/MW	
A-E MANAGER	EW	
ENVIRONMENTAL BRANCH	JH	
SAFETY BRANCH	CS	
CM	MMD	
PM	RWP	
CUSTOMER	JWB	
ENG. BRANCH	DGL	
ARCHITECTURE		

LEVEL 3 - REFLECTED CEILING PLAN SEGMENT B

A-203b

FLIGHT PROJECTS BUILDING

NATIONAL AERONAUTICS AND SPACE ADMINISTRATION

GODDARD SPACE FLIGHT CENTER GREENBELT, MARYLAND
FACILITIES MANAGEMENT DIVISION

DATE ISSUED	CoF CODE OR WR#	AECOM PROJECT NO.	SCALE
10/12/2012	12GXAZ	60187636	1/8" = 1'-0"

FILE DATE: 10/11/2012 3:57:45 PM

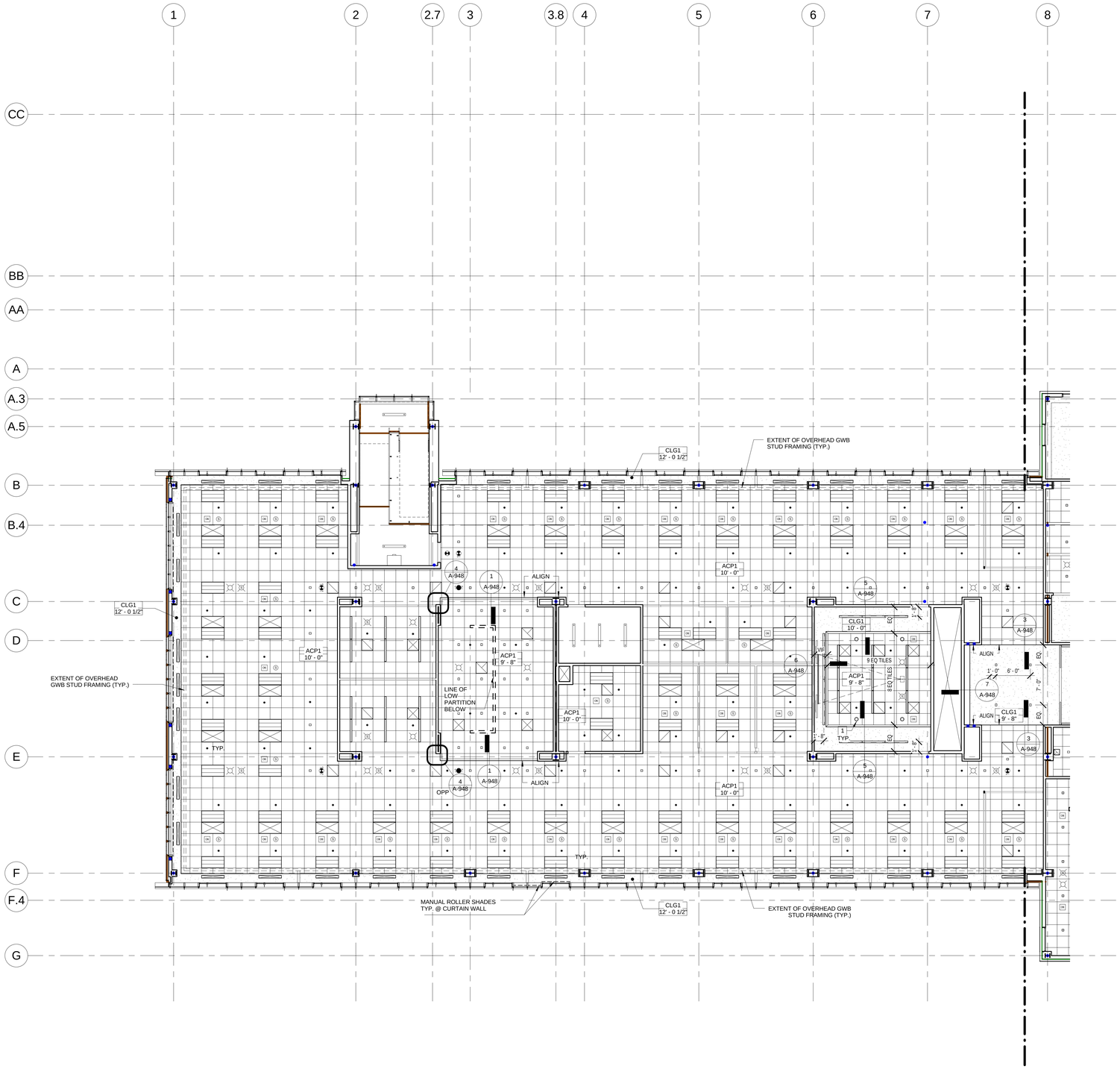

LEVEL 4 - REFLECTED CEILING PLAN SEGMENT A

1 | A-204a REF. A-301 SCALE: 1/8" = 1'-0"

REFLECTED CEILING PLAN GENERAL NOTES:

1. ALL PERIMETER OFFICES TO BE @ 10'-0" U.N.O.
2. ALL MECHANICAL, ELECTRICAL AND PLUMBING WORK LOCATED ABOVE GYP. BOARD CEILINGS SHALL BE LOCATED TO MINIMIZE REQUIRED ACCESS TO INACCESSIBLE CEILING. GC TO SUBMIT COORDINATED LAYOUT DRAWINGS OF ALL LOCATIONS OF LIGHTING, DIFFUSERS, FIRE PROTECTION DEVICES, SPRINKLERS, A/V SECURITY ITEMS, AND REQUIRED ACCESS PANELS TO ARCHITECT FOR REVIEW PRIOR TO FRAMING.
3. ALL SUSPENDED ACOUSTICAL CEILING TILE AND GRID TO BE ACP1, U.N.O.
4. ALL CEILING HEIGHTS ARE FROM TOP OF FINISHED FLOOR, U.N.O.
5. REFER TO ELECTRICAL DRAWINGS FOR LIGHT FIXTURES DESIGNATIONS AND SCHEDULE.
6. PROVIDE SWITCHES IN ALL ENCLOSED ROOMS AND MOTION SENSOR LIGHT SWITCHES IN EACH OFFICE PER APPLICABLE CODES AND REGULATIONS. REFER TO ELECTRICAL DRAWINGS.
7. GANG SWITCHES UNDER ONE COVER PLATE WHEN POSSIBLE. PLACE LIGHT SWITCH(S) PER DRAWINGS.
8. REFER TO MECHANICAL DRAWINGS FOR HVAC WORK AS REQUIRED. MECHANICAL ELEMENTS SHOWN ARE FOR LOCATION ONLY.
9. ALL SPRINKLER HEADS TO BE CENTERED IN ACOUSTICAL PANELS, U.N.O. CONCEALED SPRINKLER HEAD COVERS TO BE WHITE IN TYPICAL CEILING AREAS OR CLG1 IN AREAS OPEN TO STRUCTURE ABOVE.
10. CENTER ALL CEILING DEVICES IN CENTER LINE OF LIGHT FICTURES WHERE GYP. BOARD CEILING IS INDICATED.
11. GWB SOFFIT @ 12'-0" AROUND THE BUILDING PERIMETER U.N.O - SEE WALL SECTIONS FOR DETAIL.
12. CEILING TO RUN CONTINUOUS AT DEMOUNTABLE PARTITIONS.

REFLECTED CEILING PLAN KEYNOTES:

1. CEILING MOUNTED SPEAKERS.

CEILING LEGEND

- SUSPENDED 2'-0" x 2'-0" ACOUSTICAL CEILING PANELS
- METAL PANEL
- GYPSUM BOARD CEILING
- EXPOSED UNDERSIDE OF FLOOR OR ROOF STRUCTURE
- RECESSED LIGHT FIXTURE 4'-0" x 2'-0"
- CHILLED BEAM 4'-0" x 2'-0"
- CHILLED BEAM 4'-0" x 0'-6"
- SUPPLY DIFFUSER 2'-0" x 2'-0"
- RETURN AIR 2'-0" x 2'-0"
- EXHAUST 2'-0" x 2'-0"
- LINEAR SLOT DIFFUSER
- 1'-0"x1'-0" SUPPLY DIFFUSER
- 1'-0"x1'-0" EXHAUST GRILL
- 6" WIDE LINEAR RETURN
- 6" WIDE LINEAR SUPPLY DIFFUSER
- 6" WIDE LINEAR SUPPLY DIFFUSER - SIDE
- STROBE SPEAKER - CEILING MOUNTED
- STROBE - CEILING MOUNTED
- OCCUPANCY SENSOR
- SPRINKLER - CEILING MOUNTED (130 SF/ SP. HEAD FOR ORDINARY HAZARD AREA, MIN. 6' APART)
- SPEAKER
- RECESSED DOWNLIGHTS
- RECESSED LINEAR LIGHT FIXTURE 4'-0" x 0'-4"
- RECESSED WALL WASHER 4'-0" x 0'-4"
- CEILING MOUNTED PROJECTOR & CEILING RECESSED PROJECTION SCREEN (GFCI)
- MANUAL ROLLER SHADE
- MS — MOTORIZED ROLLER SHADE
- BS — MOTORIZED BALCK-OUT & ROLLER SHADE
- WALL-MOUNTED/ CEILING-MOUNTED EXIT SIGN
- LED STRIP LIGHTING CEILING MOUNTED
- LED STRIP LIGHTING ABOVE CEILING
- ACCESS PANEL
- FAN COIL UNIT
- LCD DISPLAY

100% SUBMITTAL

NORTH

1/8"=1'-0" 8' 4' 0 8' 16'

AECOM
AECOM TECHNICAL SERVICES, INC.
3101 WILSON BOULEVARD
SUITE 900
ARLINGTON, VA 22201
T: 703-682-4900 F: 703.682.4901
www.aecom.com

SEAL AREA

BOARD OF ARCHITECTS 101004 STATE OF MARLAND

KEY PLAN

SEGMENT - A

REV.	DATE	DESCRIPTION	S&R BR.	CUSTOMER	PM	SECT. HEAD

	INITIALS	DATE
DRAWN BY	LA/NS	
CHECKED BY	BW/MW	
A-E MANAGER	EW	
ENVIRONMENTAL BRANCH	JH	
SAFETY BRANCH	CS	
CM	MMD	
PM	RWP	
CUSTOMER	JWB	
ENG. BRANCH	DGL	
ARCHITECTURE		

LEVEL 4 - REFLECTED CEILING PLAN SEGMENT A

A-204a

FLIGHT PROJECTS BUILDING

NATIONAL AERONAUTICS AND SPACE ADMINISTRATION

GODDARD SPACE FLIGHT CENTER GREENBELT, MARYLAND
FACILITIES MANAGEMENT DIVISION

DATE ISSUED	CoF CODE OR WR#	AECOM PROJECT NO.	SCALE
10/12/2012	12GXAZ	60187636	1/8" = 1'-0"

FILE DATE: 10/11/2012 3:58:36 PM

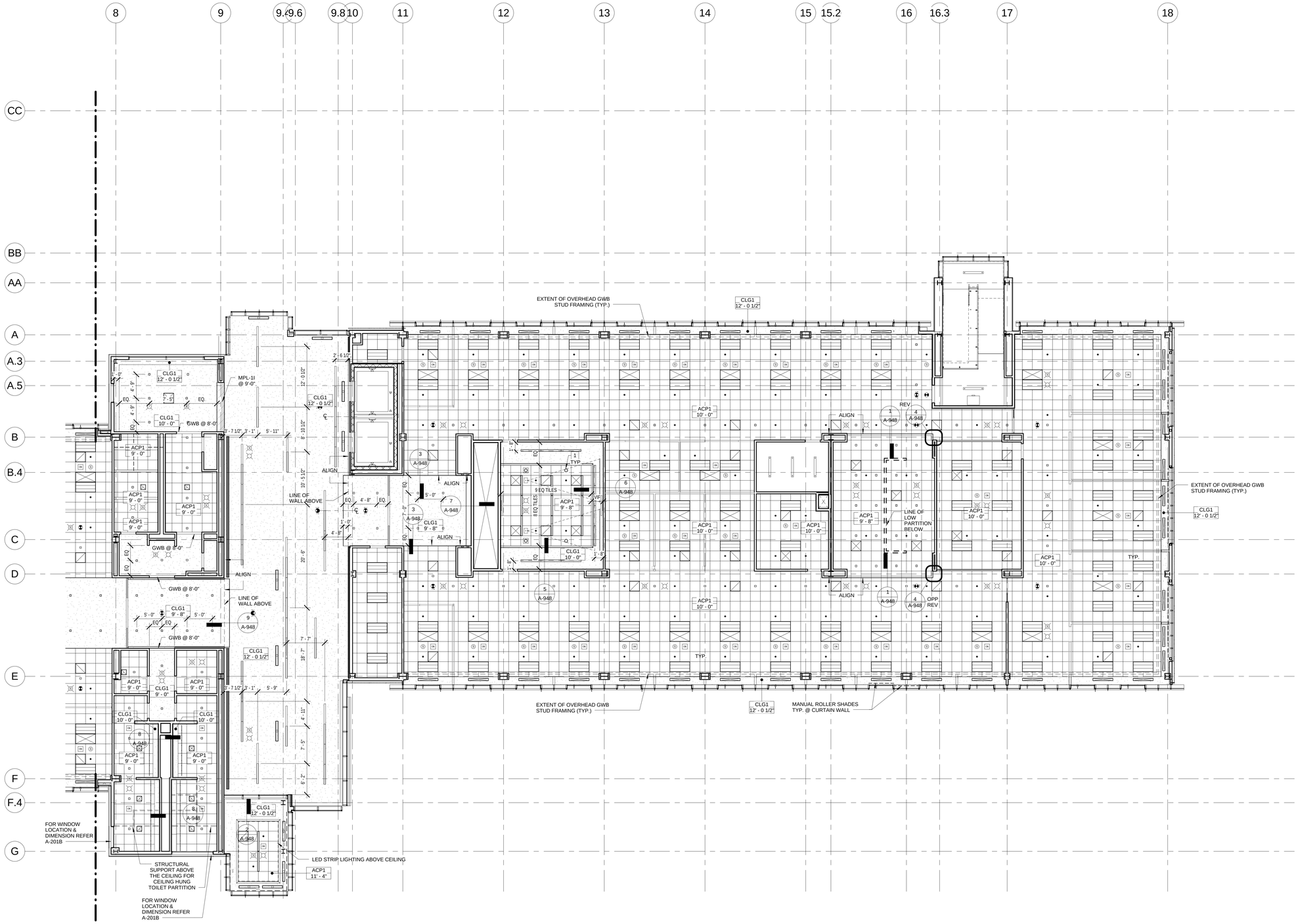

1 LEVEL 4 - REFLECTED CEILING PLAN SEGMENT B

A-204b | REF. A-301 SCALE: 1/8" = 1'-0"

REFLECTED CEILING PLAN GENERAL NOTES:

1. ALL PERIMETER OFFICES TO BE @ 10'-0" U.N.O.
2. ALL MECHANICAL, ELECTRICAL AND PLUMBING WORK LOCATED ABOVE GYP. BOARD CEILINGS SHALL BE LOCATED TO MINIMIZE REQUIRED ACCESS TO INACCESSIBLE CEILING. GC TO SUBMIT COORDINATED LAYOUT DRAWINGS OF ALL LOCATIONS OF LIGHTING, DIFFUSERS, FIRE PROTECTION DEVICES, SPRINKLERS, AV SECURITY ITEMS, AND REQUIRED ACCESS PANELS TO ARCHITECT FOR REVIEW PRIOR TO FRAMING.
3. ALL SUSPENDED ACOUSTICAL CEILING TILE AND GRID TO BE ACP1, U.N.O.
4. ALL CEILING HEIGHTS ARE FROM TOP OF FINISHED FLOOR, U.N.O.
5. REFER TO ELECTRICAL DRAWINGS FOR LIGHT FIXTURES DESIGNATIONS AND SCHEDULE.
6. PROVIDE SWITCHES IN ALL ENCLOSED ROOMS AND MOTION SENSOR LIGHT SWITCHES IN EACH OFFICE PER APPLICABLE CODES AND REGULATIONS. REFER TO ELECTRICAL DRAWINGS.
7. GANG SWITCHES UNDER ONE COVER PLATE WHEN POSSIBLE. PLACE LIGHT SWITCH(S) PER DRAWINGS.
8. REFER TO MECHANICAL DRAWINGS FOR HVAC WORK AS REQUIRED. MECHANICAL ELEMENTS SHOWN ARE FOR LOCATION ONLY.
9. ALL SPRINKLER HEADS TO BE CENTERED IN ACOUSTICAL PANELS, U.N.O. CONCEALED SPRINKLER HEAD COVERS TO BE WHITE IN TYPICAL CEILING AREAS OR CLG1 IN AREAS OPEN TO STRUCTURE ABOVE.
10. CENTER ALL CEILING DEVICES IN CENTER LINE OF LIGHT FICTURES WHERE GYP. BOARD CEILING IS INDICATED.
11. GWB SOFFIT @ 12'-0" AROUND THE BUILDING PERIMETER U.N.O - SEE WALL SECTIONS FOR DETAIL.
12. CEILING TO RUN CONTINUOUS AT DEMOUNTABLE PARTITIONS.

REFLECTED CEILING PLAN KEYNOTES:

1. CEILING MOUNTED SPEAKERS.

CEILING LEGEND

- SUSPENDED 2'-0" x 2'-0" ACOUSTICAL CEILING PANELS
- METAL PANEL
- GYPSUM BOARD CEILING
- EXPOSED UNDERSIDE OF FLOOR OR ROOF STRUCTURE
- RECESSED LIGHT FIXTURE 4'-0" x 2'-0"
- CHILLED BEAM 4'-0" x 2'-0"
- CHILLED BEAM 4'-0" x 0'-6"
- SUPPLY DIFFUSER 2'-0" x 2'-0"
- RETURN AIR 2'-0" x 2'-0"
- EXHAUST 2'-0" x 2'-0"
- LINEAR SLOT DIFFUSER
- 1'-0"x1'-0" SUPPLY DIFFUSER
- 1'-0"x1'-0" EXHAUST GRILL
- 6" WIDE LINEAR RETURN
- 6" WIDE LINEAR SUPPLY DIFFUSER
- 6" WIDE LINEAR SUPPLY DIFFUSER - SIDE
- STROBE SPEAKER - CEILING MOUNTED
- STROBE - CEILING MOUNTED
- OCCUPANCY SENSOR
- SPRINKLER - CEILING MOUNTED (130 SF/ SP. HEAD FOR ORDINARY HAZARD AREA, MIN. 6' APART)
- SPEAKER
- RECESSED DOWNLIGHTS
- RECESSED LINEAR LIGHT FIXTURE 4'-0" x 0'-4"
- RECESSED WALL WASHER 4'-0" x 0'-4"
- CEILING MOUNTED PROJECTOR & CEILING RECESSED PROJECTION SCREEN (GFCI)
- MANUAL ROLLER SHADE
- MS — MOTORIZED ROLLER SHADE
- BS — MOTORIZED BALCK-OUT & ROLLER SHADE
- WALL-MOUNTED/ CEILING-MOUNTED EXIT SIGN
- LED STRIP LIGHTING CEILING MOUNTED
- LED STRIP LIGHTING ABOVE CEILING
- ACCESS PANEL
- FAN COIL UNIT
- LCD DISPLAY

100% SUBMITTAL

NORTH

1/8"=1'-0" 8' 4' 0 8' 16'

AECOM

AECOM TECHNICAL SERVICES, INC.
3101 WILSON BOULEVARD
SUITE 900
ARLINGTON, VA 22201

T: 703-682-4900 F: 703.682.4901
www.aecom.com

SEAL AREA

BOARD OF ARCHITECTS 10/2012 EDWARD W. WEIDE STATE OF MARYLAND

KEY PLAN

SEGMENT - B

REV	DATE	DESCRIPTION	S&R BR.	CUSTOMER	PM	SECT. HEAD

	INITIALS	DATE
DRAWN BY	NS/LA	
CHECKED BY	MW/BW	
A-E MANAGER	EW	
ENVIRONMENTAL BRANCH	JH	
SAFETY BRANCH	CS	
CM	MMD	
PM	RWP	
CUSTOMER	JWB	
ENG. BRANCH	DGL	
ARCHITECTURE		

LEVEL 4 - REFLECTED CEILING PLAN SEGMENT B

A-204b

FLIGHT PROJECTS BUILDING

NATIONAL AERONAUTICS AND SPACE ADMINISTRATION

GODDARD SPACE FLIGHT CENTER GREENBELT, MARYLAND
FACILITIES MANAGEMENT DIVISION

DATE ISSUED	CoF CODE OR W/O#	AECOM PROJECT NO.	SCALE
10/12/2012	120KAZ	60187636	1/8" = 1'-0"

FILE DATE: 10/11/2012 3:59:14 PM

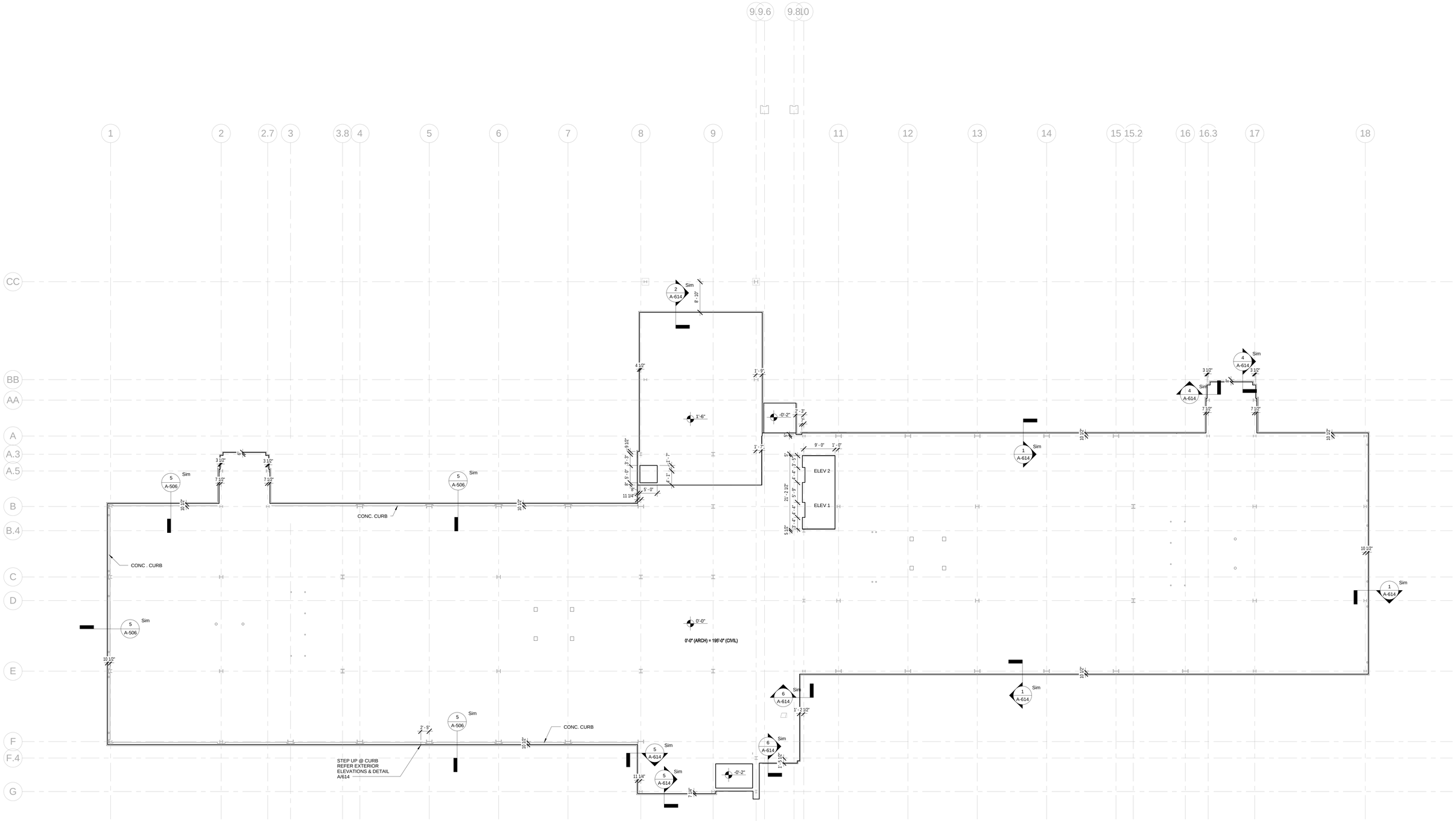

1 SLAB EDGE PLAN - LEVEL 1

A-211 REF. A-301 SCALE: 3/32" = 1'-0"

GENERAL NOTES

1. SLAB EDGE DRAWINGS ARE FOR INFORMATION ONLY.
2. NOT ALL SLAB OPENINGS AND PENETRATIONS ARE SHOWN.
3. CONTRACTOR TO COORDINATE OPENING SIZES & LOCATIONS W/ OTHER DISCIPLINES.

100% SUBMITTAL

AECOM

AECOM TECHNICAL SERVICES, INC.
3101 WILSON BOULEVARD
SUITE 900
ARLINGTON, VA 22201

T: 703-682-4900 F: 703.682.4901
www.aecom.com

SEAL AREA

BOARD OF ARCHITECTS
10084
REGISTERED
STATE OF MARYLAND

KEY PLAN

REV	DATE	DESCRIPTION	S&R BR.	CUSTOMER	PM	SECT. HEAD

	INITIALS	DATE
DRAWN BY	LA/NS	
CHECKED BY	BW/MW	
A-E MANAGER	EW	
ENVIRONMENTAL BRANCH	JH	
SAFETY BRANCH	CS	
CM	MMD	
PM	RWP	
CUSTOMER	JWB	
ENG. BRANCH	DGL	

SLAB EDGE PLAN - LEVEL 1

A-211

FLIGHT PROJECTS BUILDING

NATIONAL AERONAUTICS AND SPACE ADMINISTRATION

GODDARD SPACE FLIGHT CENTER GREENBELT, MARYLAND
FACILITIES MANAGEMENT DIVISION

DATE ISSUED	CoF CODE OR WR#	AECOM PROJECT NO.	SCALE
10/12/2012	12GXAZ	60187636	3/32" = 1'-0"

FILE DATE: 10/11/2012 6:46:52 PM

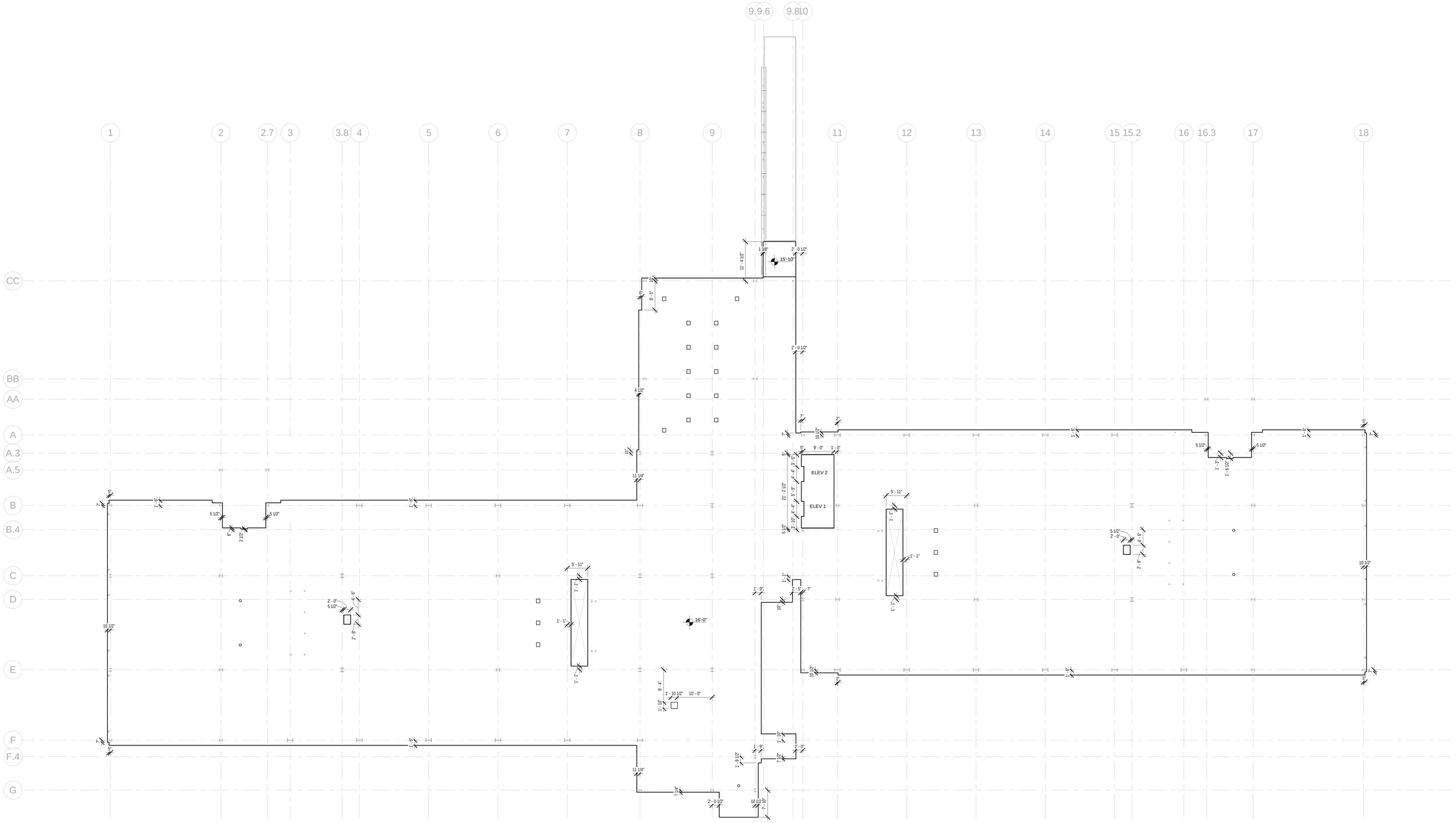

1 SLAB EDGE PLAN - LEVEL 2

A-212 REF. A-301 SCALE: 3/32" = 1'-0"

GENERAL NOTES

1. SLAB EDGE DRAWINGS ARE FOR INFORMATION ONLY.
2. NOT ALL SLAB OPENINGS AND PENETRATIONS ARE SHOWN.
3. CONTRACTOR TO COORDINATE OPENING SIZES & LOCATIONS W/ OTHER DISCIPLINES.

100% SUBMITTAL

AECOM

AECOM TECHNICAL SERVICES, INC.
3101 WILSON BOULEVARD
SUITE 900
ARLINGTON, VA 22201

T: 703-682-4900 F: 703.682.4901
www.aecom.com

SEAL AREA

BOARD OF ARCHITECTS 10094 ERIC W. WEISS REGISTERED ARCHITECT STATE OF MARYLAND

KEY PLAN

REV	DATE	DESCRIPTION	S&R BR.	CUSTOMER	PM	SECT. HEAD

	INITIALS	DATE
DRAWN BY	LA/NS	
CHECKED BY	BW/MW	
A-E MANAGER	EW	
ENVIRONMENTAL BRANCH	JH	
SAFETY BRANCH	CS	
CM	MMD	
PM	RWP	
CUSTOMER	JWB	
ENG. BRANCH	DGL	

SLAB EDGE PLAN - LEVEL 2

A-212

FLIGHT PROJECTS BUILDING

NATIONAL AERONAUTICS AND SPACE ADMINISTRATION

GODDARD SPACE FLIGHT CENTER GREENBELT, MARYLAND
FACILITIES MANAGEMENT DIVISION

DATE ISSUED	CoF CODE OR WR#	AECOM PROJECT NO.	SCALE
10/12/2012	12GXAZ	60187636	3/32" = 1'-0"

FILE DATE: 10/11/2012 5:41:31 PM

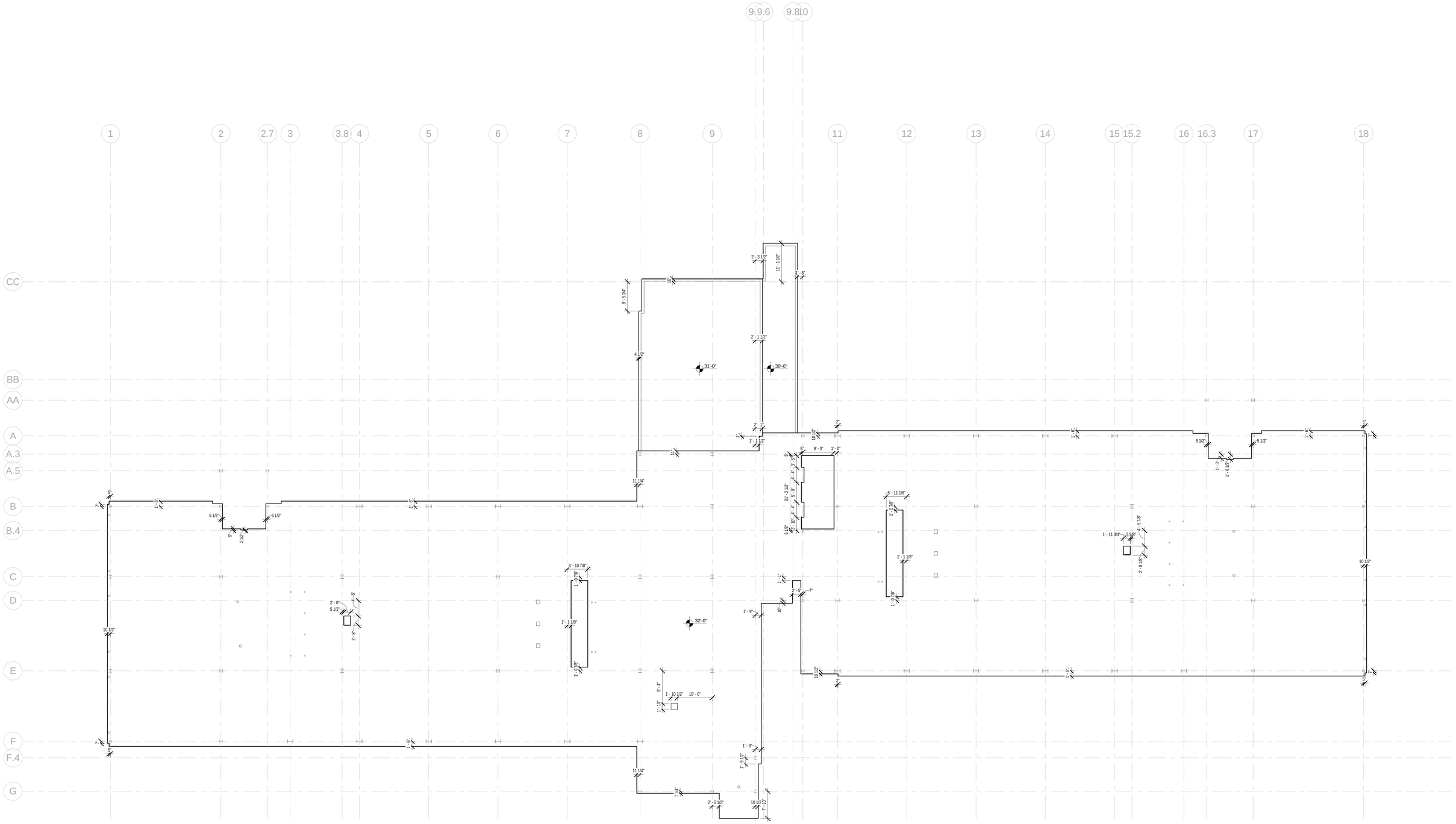

1 SLAB EDGE PLAN - LEVEL 3

A-213 REF. A-301 SCALE: 3/32" = 1'-0"

GENERAL NOTES

1. SLAB EDGE DRAWINGS ARE FOR INFORMATION ONLY.
2. NOT ALL SLAB OPENINGS AND PENETRATIONS ARE SHOWN.
3. CONTRACTOR TO COORDINATE OPENING SIZES & LOCATIONS W/ OTHER DISCIPLINES.

100% SUBMITTAL

AECOM

AECOM TECHNICAL SERVICES, INC.
3101 WILSON BOULEVARD
SUITE 900
ARLINGTON, VA 22201

T: 703-682-4900 F: 703.682.4901
www.aecom.com

SEAL AREA

BOARD OF ARCHITECTURE
EDWARD W. WILSON
STATE OF MARYLAND

KEY PLAN

REV.	DATE	DESCRIPTION	S&R BR.	CUSTOMER	PM	SECT. HEAD

	INITIALS	DATE
DRAWN BY	LA/NS	
CHECKED BY	BW/MW	
A-E MANAGER	EW	
ENVIRONMENTAL BRANCH	JH	
SAFETY BRANCH	CS	
CM	MMD	
PM	RWP	
CUSTOMER	JWB	
ENG. BRANCH	DGL	

SLAB EDGE PLAN - LEVEL 3

A-213

FLIGHT PROJECTS BUILDING

NATIONAL AERONAUTICS AND SPACE ADMINISTRATION

GODDARD SPACE FLIGHT CENTER GREENBELT, MARYLAND
FACILITIES MANAGEMENT DIVISION

DATE ISSUED	CoF CODE OR WR#	AECOM PROJECT NO.	SCALE
10/12/2012	12GXAZ	60187636	3/32" = 1'-0"

FILE DATE: 10/11/2012 5:41:40 PM

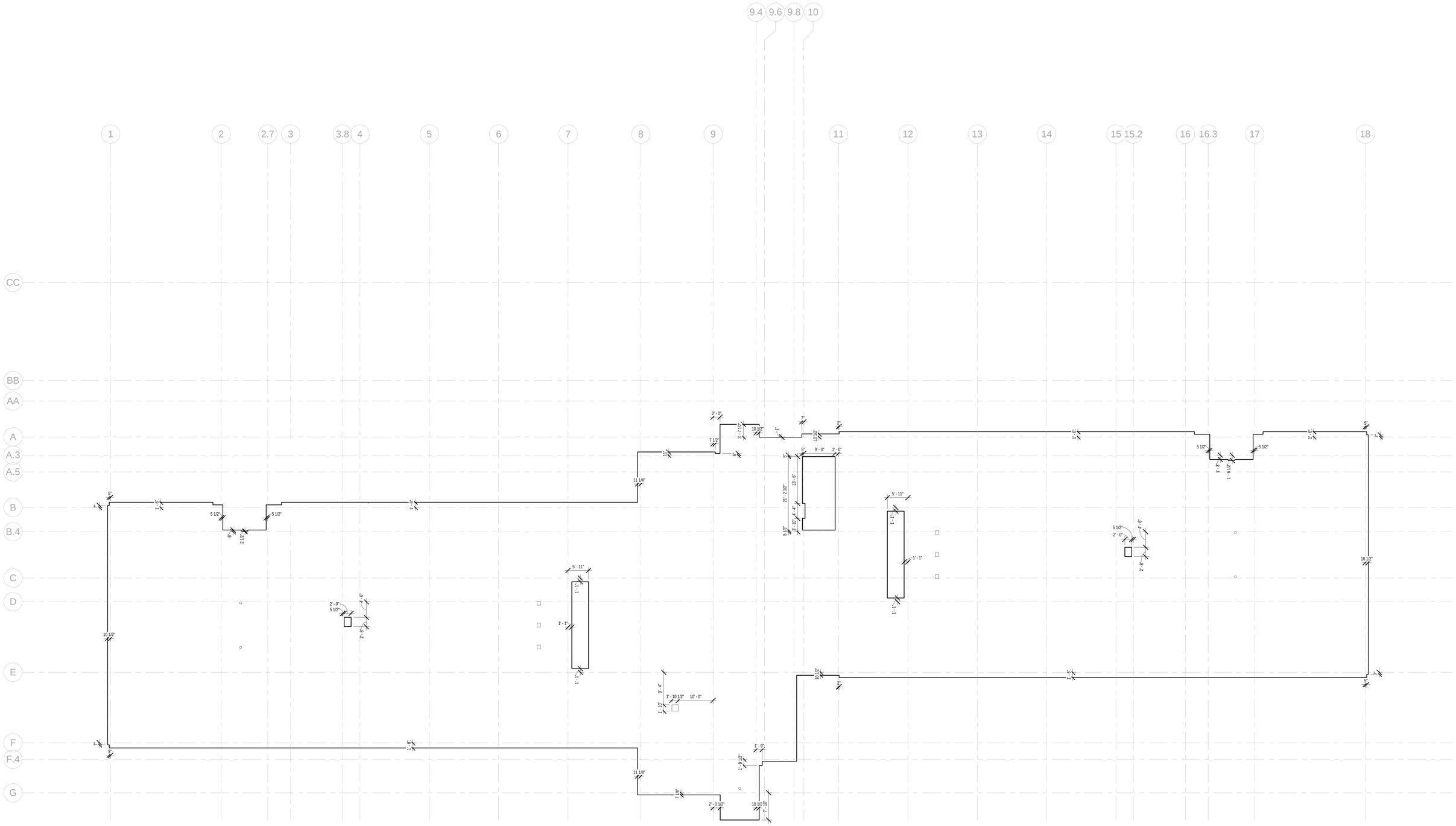

1 SLAB EDGE PLAN - LEVEL 4

A-214 REF. A-301 SCALE: 3/32" = 1'-0"

GENERAL NOTES

1. SLAB EDGE DRAWINGS ARE FOR INFORMATION ONLY.
2. NOT ALL SLAB OPENINGS AND PENETRATIONS ARE SHOWN.
3. CONTRACTOR TO COORDINATE OPENING SIZES & LOCATIONS W/ OTHER DISCIPLINES.

100% SUBMITTAL

AECOM

AECOM TECHNICAL SERVICES, INC.
3101 WILSON BOULEVARD
SUITE 900
ARLINGTON, VA 22201

T: 703-682-4900 F: 703.682.4901
www.aecom.com

SEAL AREA

BOARD OF ARCHITECTS 10084 EDWARD D. WEBER 2012 STATE OF MARYLAND

KEY PLAN

REV	DATE	DESCRIPTION	S&R BR.	CUSTOMER	PM	SECT. HEAD

	INITIALS	DATE
DRAWN BY	LA/NS	
CHECKED BY	BW/MW	
A-E MANAGER	EW	
ENVIRONMENTAL BRANCH	JH	
SAFETY BRANCH	CS	
CM	MMD	
PM	RWP	
CUSTOMER	JWB	
ENG. BRANCH	DGL	

SLAB EDGE PLAN - LEVEL 4

A-214

FLIGHT PROJECTS BUILDING

NATIONAL AERONAUTICS AND SPACE ADMINISTRATION

GODDARD SPACE FLIGHT CENTER GREENBELT, MARYLAND
FACILITIES MANAGEMENT DIVISION

DATE ISSUED	CoF CODE OR WR#	AECOM PROJECT NO.	SCALE
10/12/2012	12GXAZ	60187636	3/32" = 1'-0"

FILE DATE: 10/11/2012 5:41:48 PM

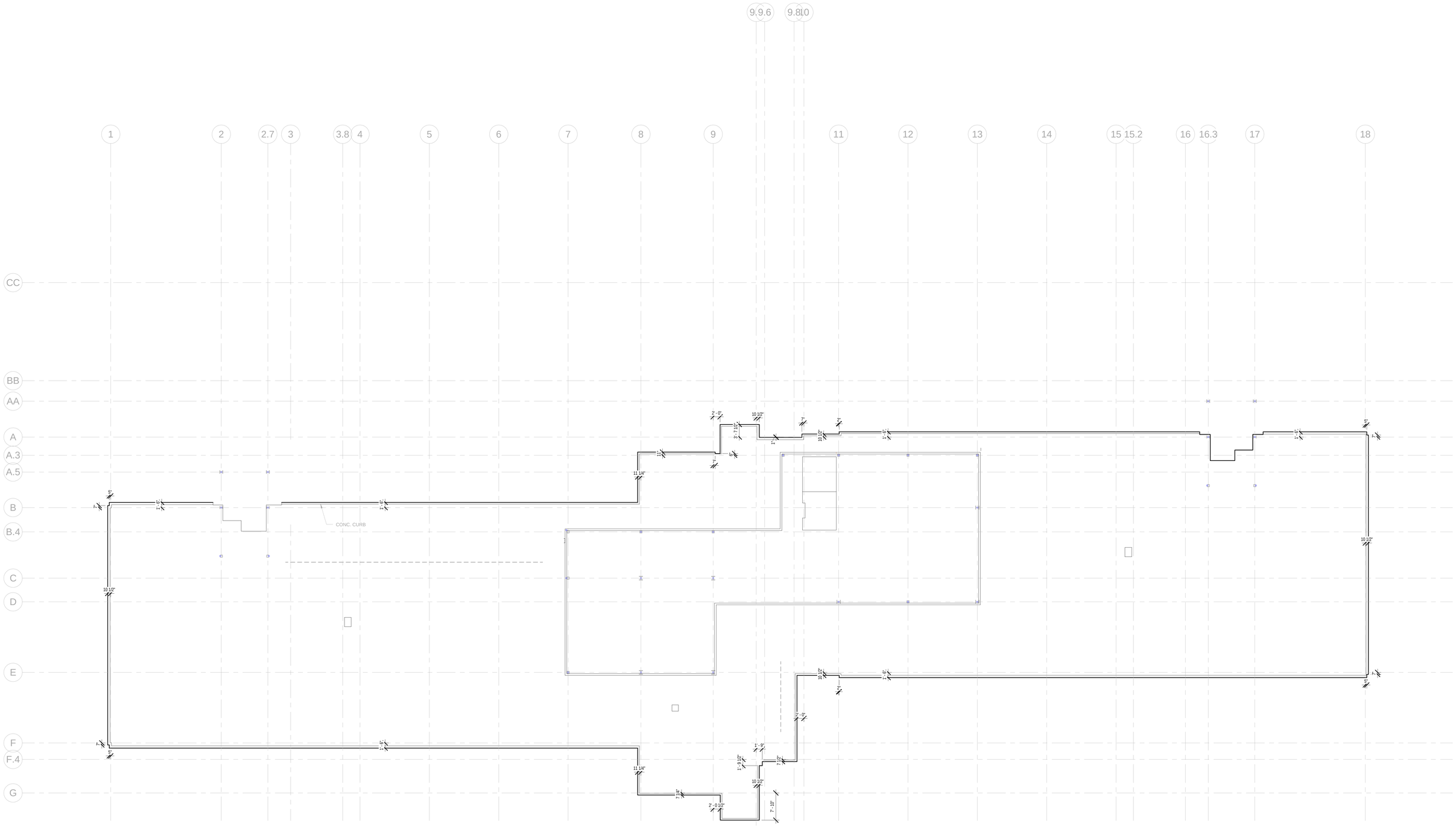

1 SLAB EDGE PLAN - PH LEVEL

A-215 REF. A-301 SCALE: 3/32" = 1'-0"

GENERAL NOTES

1. SLAB EDGE DRAWINGS ARE FOR INFORMATION ONLY.
2. NOT ALL SLAB OPENINGS AND PENETRATIONS ARE SHOWN.
3. CONTRACTOR TO COORDINATE OPENING SIZES & LOCATIONS W/ OTHER DISCIPLINES.

100% SUBMITTAL

AECOM

AECOM TECHNICAL SERVICES, INC.
3101 WILSON BOULEVARD
SUITE 900
ARLINGTON, VA 22201

T: 703-682-4900 F: 703.682.4901
www.aecom.com

SEAL AREA

BOARD OF ARCHITECTS
EDWARD WARNER
STATE OF MARYLAND

KEY PLAN

REV	DATE	DESCRIPTION	S&R BR.	CUSTOMER	PM	SECT. HEAD

	INITIALS	DATE
DRAWN BY	LA/NS	
CHECKED BY	BW/MW	
A-E MANAGER	EW	
ENVIRONMENTAL BRANCH	JH	
SAFETY BRANCH	CS	
CM	MMD	
PM	RWP	
CUSTOMER	JWB	
ENG. BRANCH	DGL	

SLAB EDGE PLAN - PH LEVEL

A-215

FLIGHT PROJECTS BUILDING

NATIONAL AERONAUTICS AND SPACE ADMINISTRATION

GODDARD SPACE FLIGHT CENTER GREENBELT, MARYLAND
FACILITIES MANAGEMENT DIVISION

DATE ISSUED	CoF CODE OR WR#	AECOM PROJECT NO.	SCALE
10/12/2012	12GXAZ	60187636	3/32" = 1'-0"

FILE DATE: 10/11/2012 5:41:56 PM

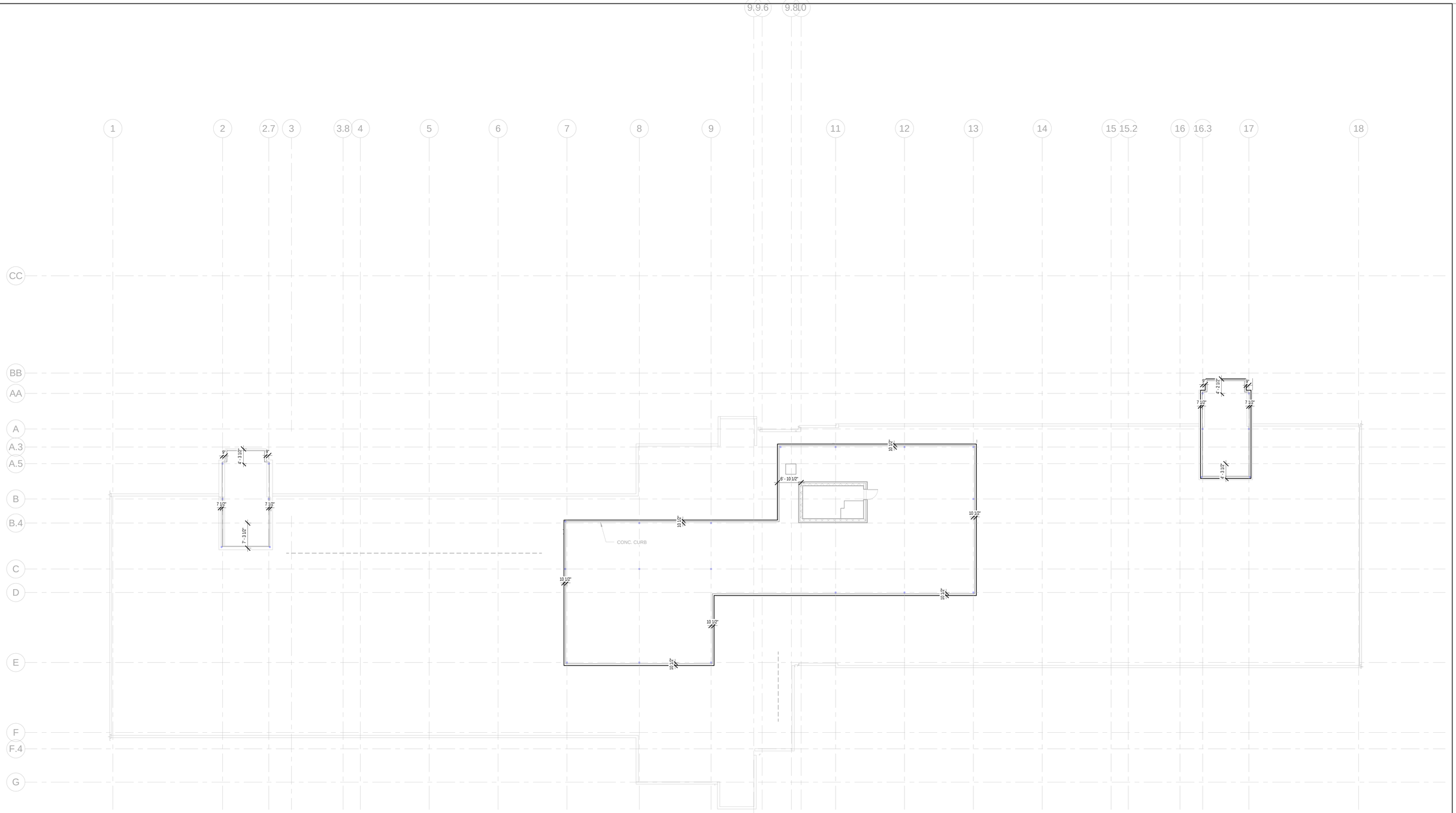

1 SLAB EDGE PLAN - PH ROOF LEVEL

A-216 REF. A-301 SCALE: 3/32" = 1'-0"

GENERAL NOTES

1. SLAB EDGE DRAWINGS ARE FOR INFORMATION ONLY.
2. NOT ALL SLAB OPENINGS AND PENETRATIONS ARE SHOWN.
3. CONTRACTOR TO COORDINATE OPENING SIZES & LOCATIONS W/ OTHER DISCIPLINES.

100% SUBMITTAL

AECOM

AECOM TECHNICAL SERVICES, INC.
3101 WILSON BOULEVARD
SUITE 900
ARLINGTON, VA 22201

T: 703-682-4900 F: 703.682.4901
www.aecom.com

SEAL AREA

BOARD OF ARCHITECTS 10164 EDWARD J. WEBER STATE OF MARYLAND

KEY PLAN

REV	DATE	DESCRIPTION	S&R BR.	CUSTOMER	PM	SECT. HEAD

	INITIALS	DATE
DRAWN BY	LA/NS	
CHECKED BY	BW/MW	
A-E MANAGER	EW	
ENVIRONMENTAL BRANCH	JH	
SAFETY BRANCH	CS	
CM	MMD	
PM	RWP	
CUSTOMER	JWB	
ENG. BRANCH	DGL	

SLAB EDGE PLAN - PH ROOF LEVEL

A-216

FLIGHT PROJECTS BUILDING

NATIONAL AERONAUTICS AND SPACE ADMINISTRATION

GODDARD SPACE FLIGHT CENTER GREENBELT, MARYLAND
FACILITIES MANAGEMENT DIVISION

DATE ISSUED	CoF CODE OR WR#	AECOM PROJECT NO.	SCALE
10/12/2012	12GXAZ	60187636	3/32" = 1'-0"

FILE DATE: 10/11/2012 5:42:06 PM

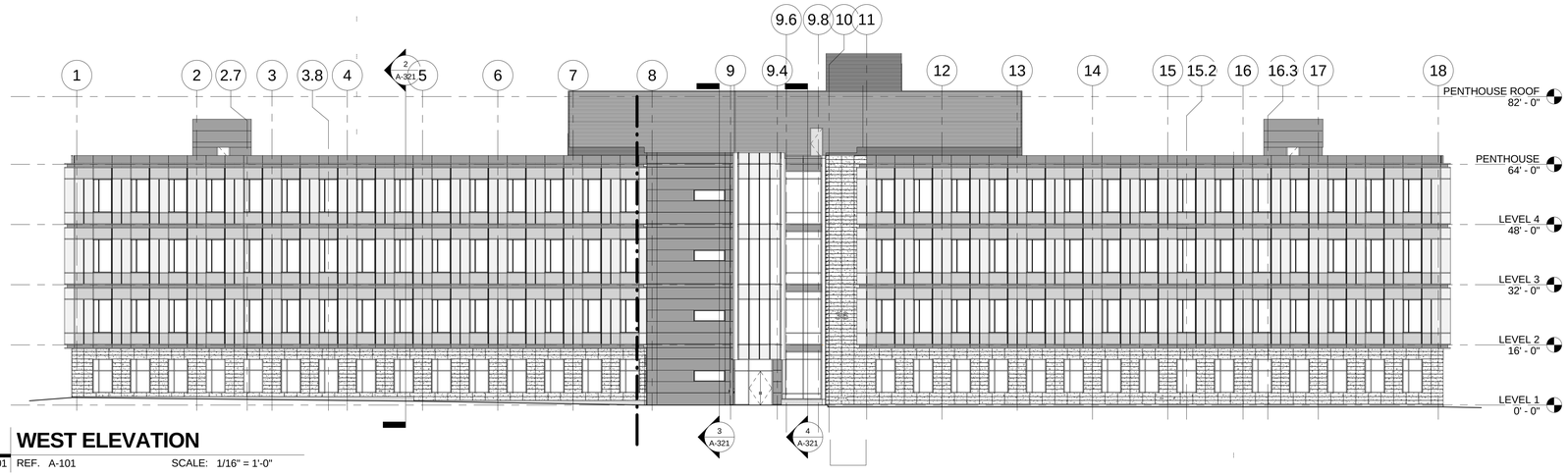

1 WEST ELEVATION

A-301 REF. A-101 SCALE: 1/16" = 1'-0"

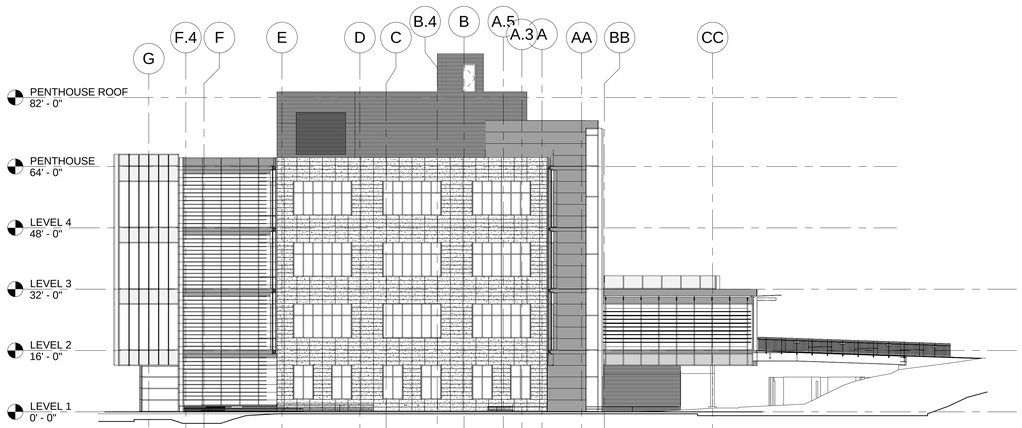

2 SOUTH ELEVATION

A-301 REF. A-101 SCALE: 1/16" = 1'-0"

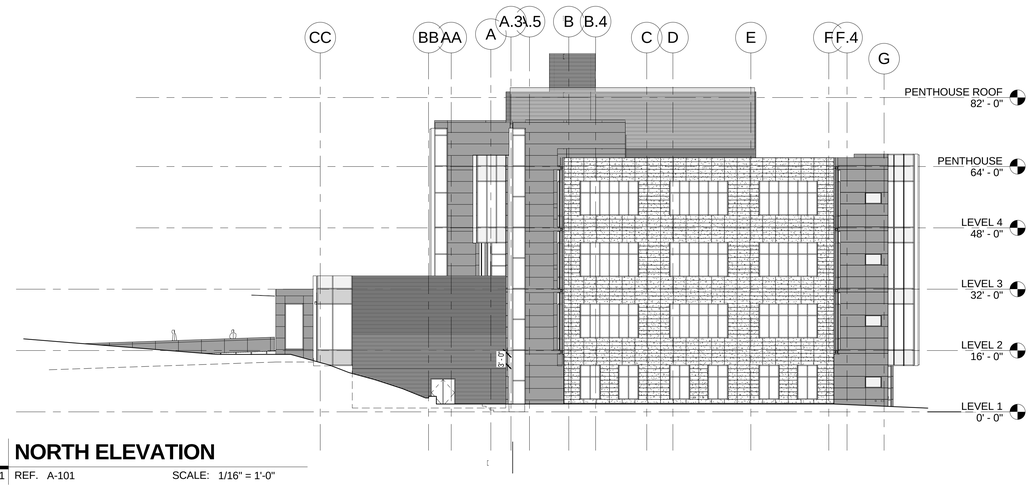

4 NORTH ELEVATION

A-301 REF. A-101 SCALE: 1/16" = 1'-0"

3 EAST ELEVATION

A-301 REF. A-101 SCALE: 1/16" = 1'-0"

MATERIAL LEGEND

- IGU1 - CLEAR GLASS
- IGU2/ GU2 - TRANSLUCENT GLASS
- IGU3 - SPANDREL GLASS
- MPL1 - METAL PANEL
- MPL2 - RIBBED METAL PANEL
- TRP1 - TERRACOTTA PANEL
- PRECAST CONC.

100% SUBMITTAL

AECOM

AECOM TECHNICAL SERVICES, INC.
3101 WILSON BOULEVARD
SUITE 900
ARLINGTON, VA 22201

T: 703-682-4900 F: 703.682.4901
www.aecom.com

SEAL AREA

BOARD OF ARCHITECTS
STATE OF MARYLAND

KEY PLAN

REV	DATE	DESCRIPTION	S&R BR.	CUSTOMER	PM	SECT. HEAD

	INITIALS	DATE
DRAWN BY	LA/NS	
CHECKED BY	BW/MW	
A-E MANAGER	EW	
ENVIRONMENTAL BRANCH	JH	
SAFETY BRANCH	CS	
CM	MMD	
PM	RWP	
CUSTOMER	JWB	
ENG. BRANCH	DGL	
ARCHITECTURE		

BUILDING ELEVATIONS

A-301

FLIGHT PROJECTS BUILDING

NATIONAL AERONAUTICS AND SPACE ADMINISTRATION

GODDARD SPACE FLIGHT CENTER GREENBELT, MARYLAND
FACILITIES MANAGEMENT DIVISION

DATE ISSUED	CoF CODE OR WR#	AECOM PROJECT NO.	SCALE
10/12/2012	12GXAZ	60187636	As indicated

FILE DATE: 10/11/2012 4:00:03 PM

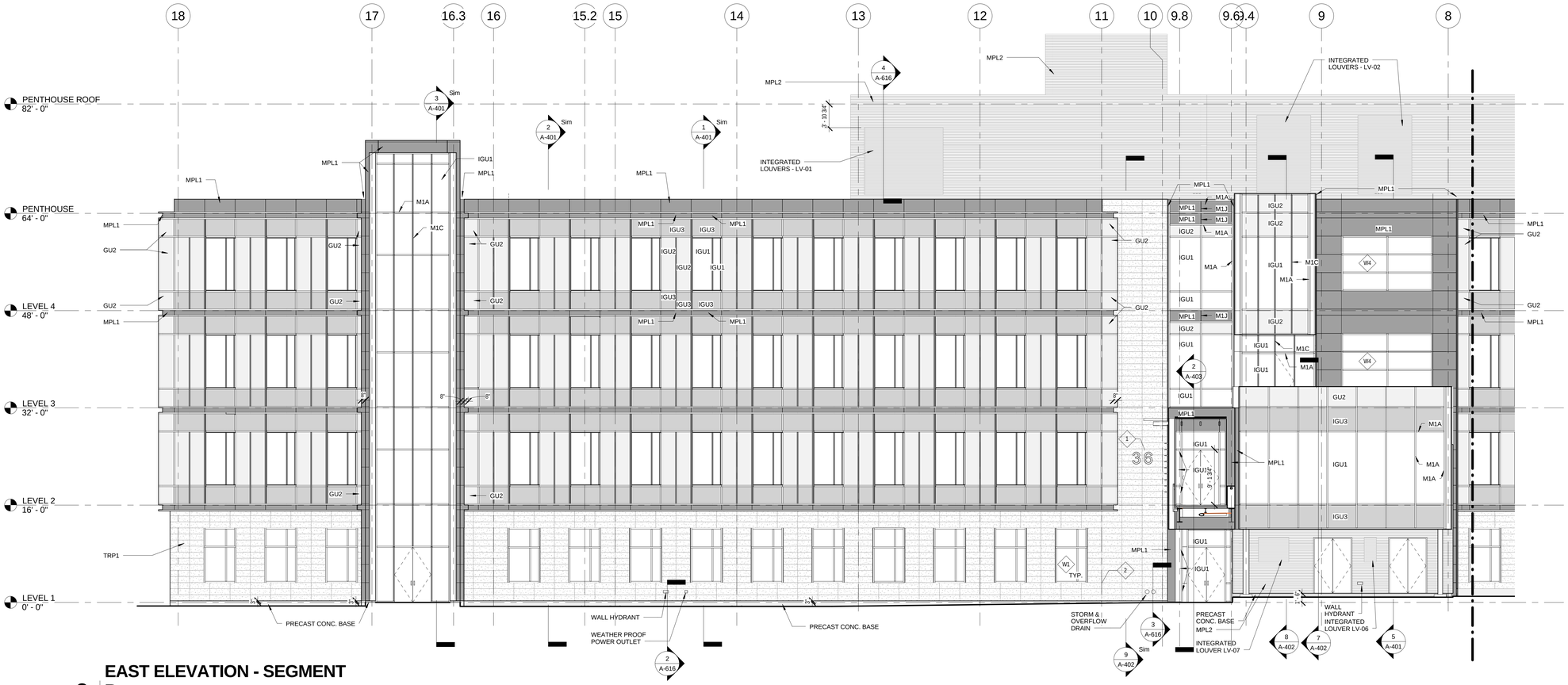

EAST ELEVATION - SEGMENT B

2 A-311 REF. A-103 SCALE: 1/8" = 1'-0"

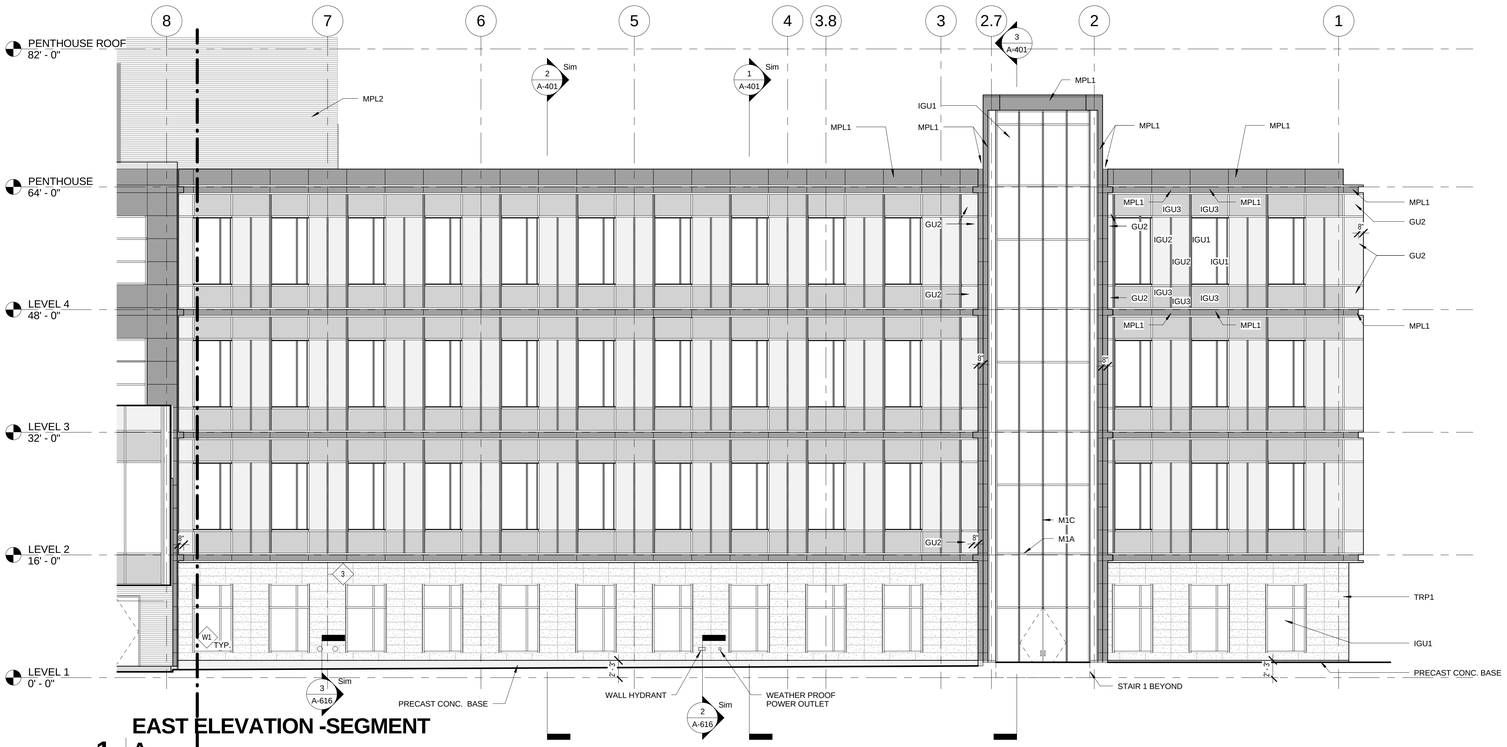

EAST ELEVATION -SEGMENT A

1 A-311 REF. A-103 SCALE: 1/8" = 1'-0"

KEY NOTES

1. **BUILDING NUMBERS**: FABRICATED OF ALUMINIUM-ALOY CASTINGS; CONCEALED MOUNTING WITH NUMBERS DRILLED AND TAPPED TO RECEIVE THREADED FASTENERS. FASTENERS TO TIE BACK TO TERRACOTTA RAINSCREEN BACK UP STUD WALL FRAMING.
   FINISH OF EXPOSED SURFACE OF BUILDING NUMBER: ALUMINIUM ASSOCIATION CLASS 1 CLEAR ANODIC COATING WITH SATIN FINISH.
   NUMBER STYLE AND SIZE: HELVETICA MEDIUM LETTER STYLE, 600MM HIGH, 125 MM STROKE WIDTH, 38MM DEPTH.
2. TERRACOTTA PANEL JOINT START POINT AT GRID LINE 11.
3. TERRACOTTA PANEL JOINT START POINT AT GRID LINE 7.

MATERIAL LEGEND

- IGU1 - CLEAR GLASS
- IGU2/ GU2 - TRANSLUCENT GLASS
- IGU3 - SPANDREL GLASS
- MPL1 - METAL PANEL
- MPL2 - RIBBED METAL PANEL
- TRP1 - TERRACOTTA PANEL
- PRECAST CONC.

100% SUBMITTAL

AECOM

AECOM TECHNICAL SERVICES, INC.
3101 WILSON BOULEVARD
SUITE 900
ARLINGTON, VA 22201

T: 703-682-4900 F: 703.682.4901
www.aecom.com

SEAL AREA

KEY PLAN

REV	DATE	DESCRIPTION	S&R BR.	CUSTOMER	PM	SECT. HEAD

	INITIALS	DATE
DRAWN BY	NS/LA	
CHECKED BY	BW/MW	
A-E MANAGER	EW	
ENVIRONMENTAL BRANCH	JH	
SAFETY BRANCH	CS	
CM	MMD	
PM	RWP	
CUSTOMER	JWB	
ENG. BRANCH	DGL	

ARCHITECTURE

ENLARGED BUILDING ELEVATIONS

A-311

FLIGHT PROJECTS BUILDING

NATIONAL AERONAUTICS AND SPACE ADMINISTRATION

GODDARD SPACE FLIGHT CENTER GREENBELT, MARYLAND
FACILITIES MANAGEMENT DIVISION

DATE ISSUED	CoF CODE OR WR#	AECOM PROJECT NO.	SCALE
10/12/2012	12GXAZ	60187636	1/8" = 1'-0"

FILE DATE: 10/12/2012 10:09:51 AM

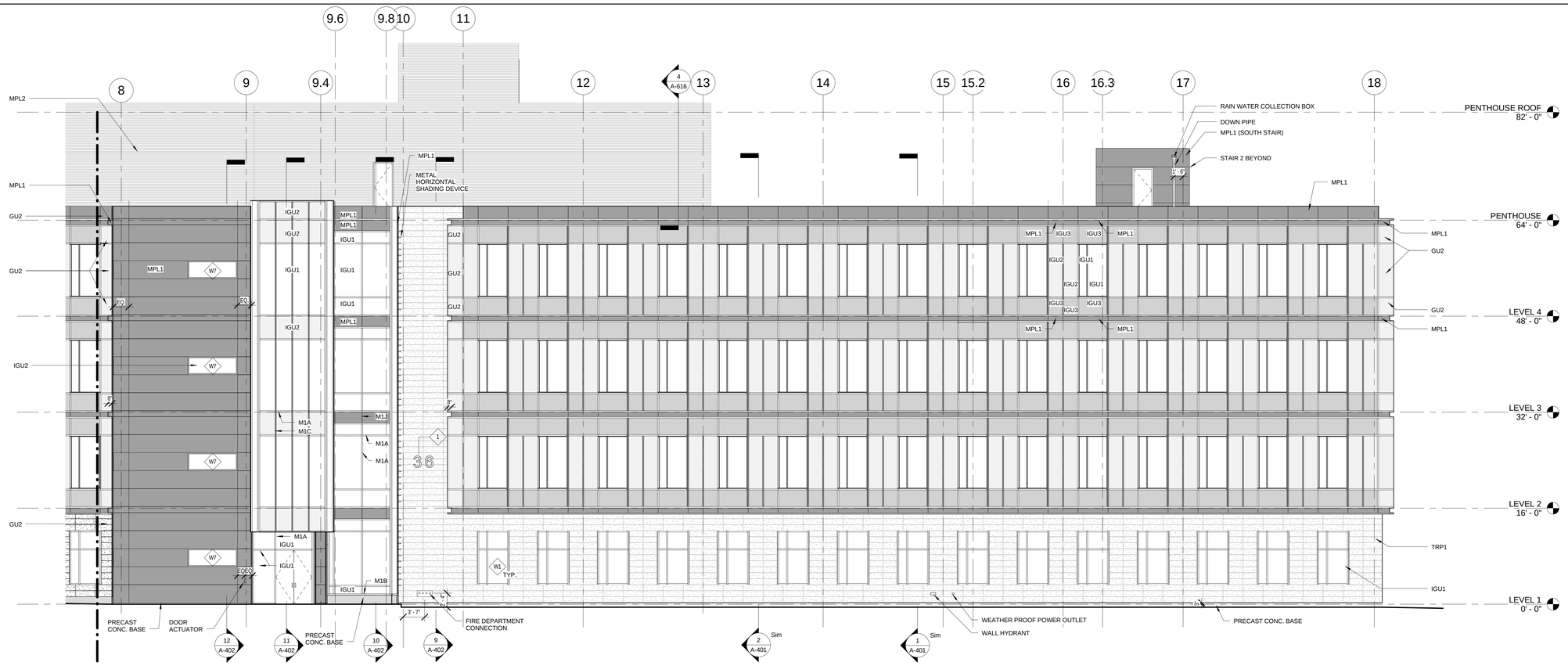

WEST ELEVATION - SEGMENT B

2 A-312 REF. A-103 SCALE: 1/8" = 1'-0"

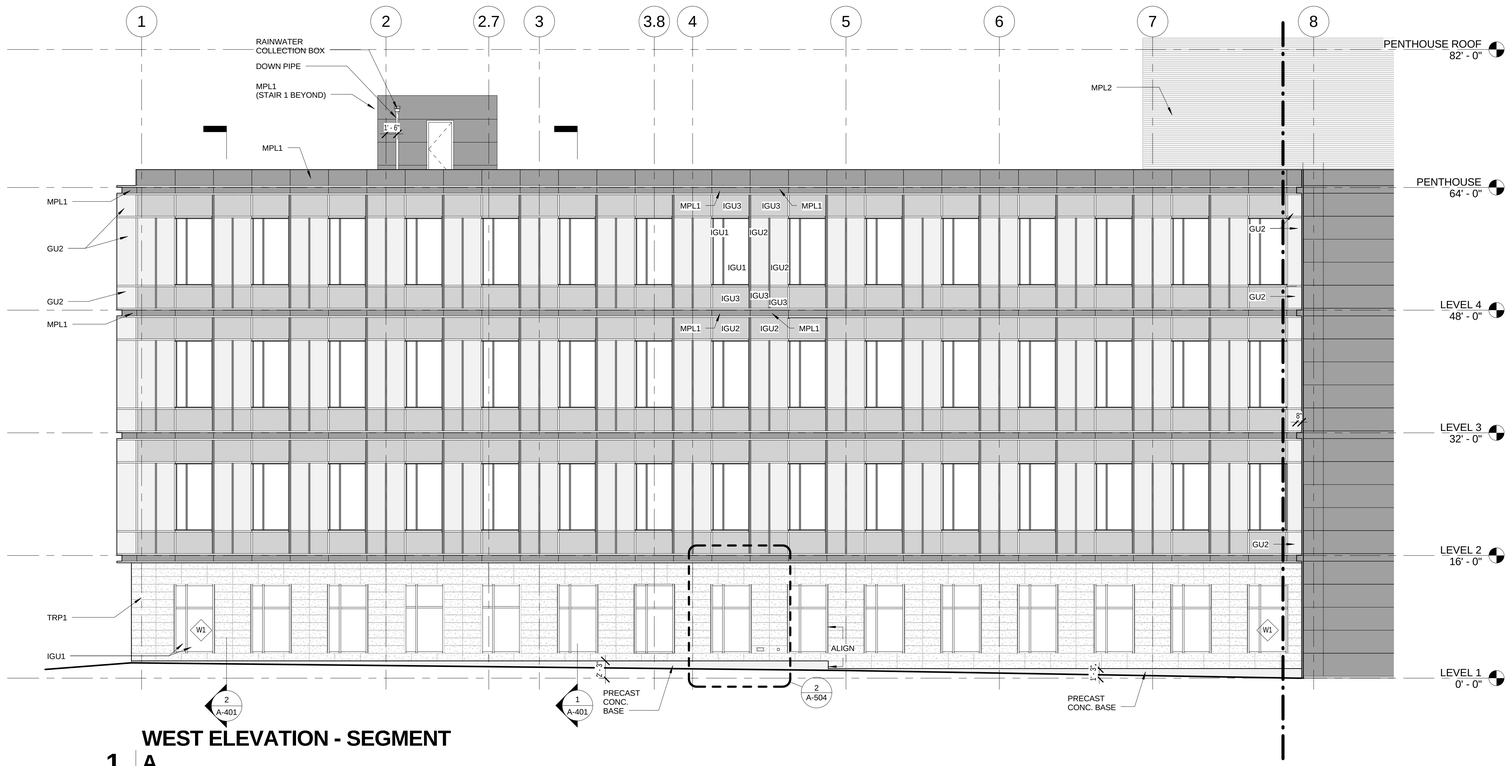

WEST ELEVATION - SEGMENT A

1 A-312 REF. A-103 SCALE: 1/8" = 1'-0"

KEY NOTES

1. **BUILDING NUMBERS**: FABRICATED OF ALUMINIUM-ALOY CASTINGS; CONCEALED MOUNTING WITH NUMBERS DRILLED AND TAPPED TO RECEIVE THREADED FASTENERS. FASTENERS TO TIE BACK TO TERRACOTTA RAINSCREEN BACK UP STUD WALL FRAMING.
   FINISH OF EXPOSED SURFACE OF BUILDING NUMBER: ALUMINIUM ASSOCIATION CLASS 1 CLEAR ANODIC COATING WITH SATIN FINISH.
   NUMBER STYLE AND SIZE: HELVETICA MEDIUM LETTER STYLE, 600MM HIGH, 125 MM STROKE WIDTH, 38MM DEPTH.
2. TERRACOTTA PANEL JOINT START POINT AT GRID LINE 11.
3. TERRACOTTA PANEL JOINT START POINT AT GRID LINE 7.

MATERIAL LEGEND

- IGU1 - CLEAR GLASS
- IGU2/ GU2 - TRANSLUCENT GLASS
- IGU3 - SPANDREL GLASS
- MPL1 - METAL PANEL
- MPL2 - RIBBED METAL PANEL
- TRP1 - TERRACOTTA PANEL
- PRECAST CONC.

100% SUBMITTAL

AECOM

AECOM TECHNICAL SERVICES, INC.
3101 WILSON BOULEVARD
SUITE 900
ARLINGTON, VA 22201

T: 703-682-4900 F: 703.682.4901
www.aecom.com

SEAL AREA

BOARD OF ARCHITECTURE 10366 EDWARD D. WEISS STATE OF MARYLAND

KEY PLAN

REV	DATE	DESCRIPTION	S&R BR.	CUSTOMER	PM	SECT. HEAD

	INITIALS	DATE
DRAWN BY	LA/NS	
CHECKED BY	BW/MW	
A-E MANAGER	EW	
ENVIRONMENTAL BRANCH	JH	
SAFETY BRANCH	CS	
CM	MMD	
PM	RWP	
CUSTOMER	JWB	
ENG. BRANCH	DGL	
ARCHITECTURE		

ENLARGED BUILDING ELEVATIONS

A-312

FLIGHT PROJECTS BUILDING

NATIONAL AERONAUTICS AND SPACE ADMINISTRATION

GODDARD SPACE FLIGHT CENTER GREENBELT, MARYLAND
FACILITIES MANAGEMENT DIVISION

DATE ISSUED	CoF CODE OR WR#	AECOM PROJECT NO.	SCALE
10/12/2012	12GXAZ	60187636	1/8" = 1'-0"

FILE DATE: 10/12/2012 10:12:52 AM

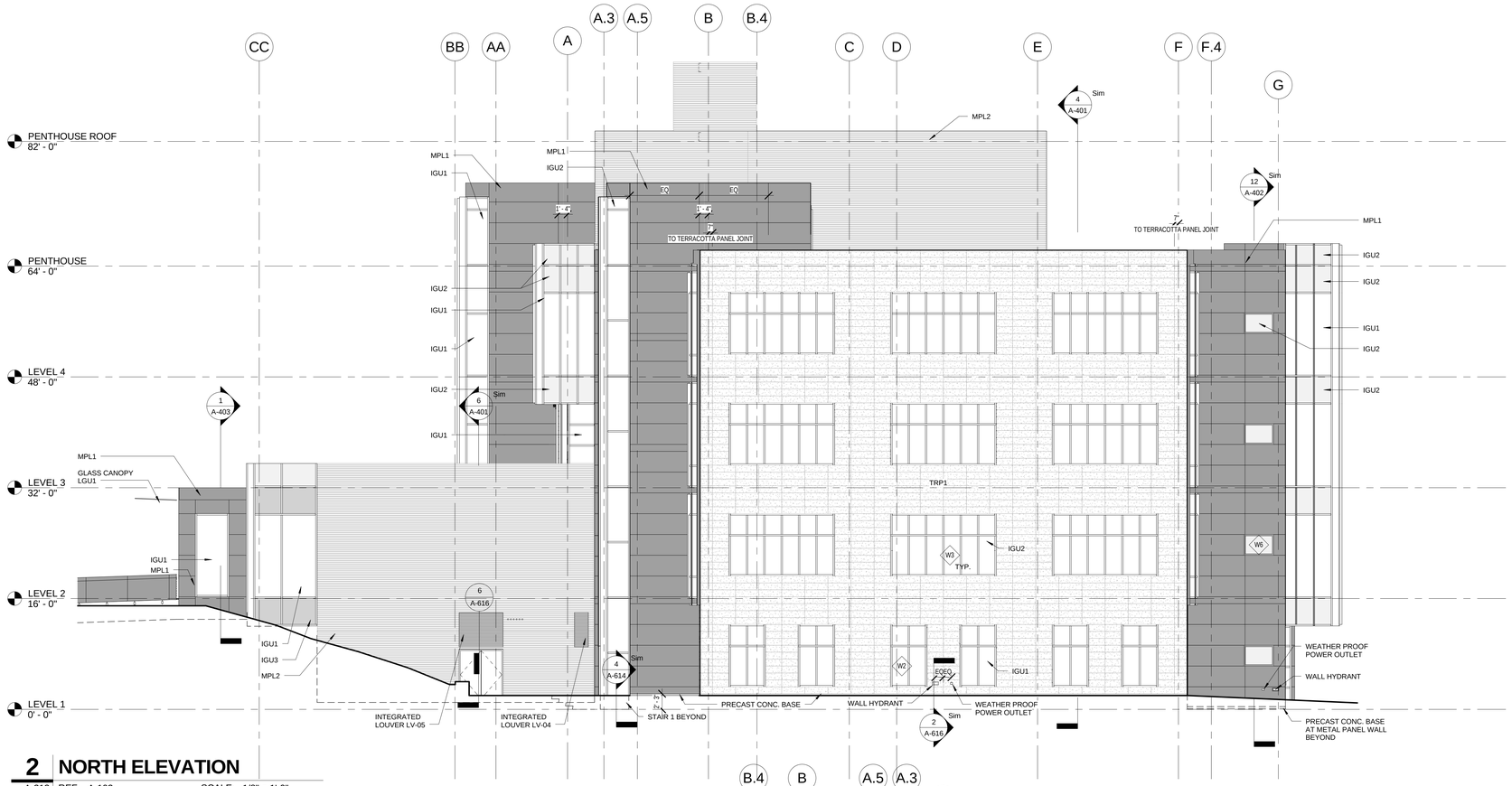

2 NORTH ELEVATION

A-313 REF. A-103 SCALE: 1/8" = 1'-0"

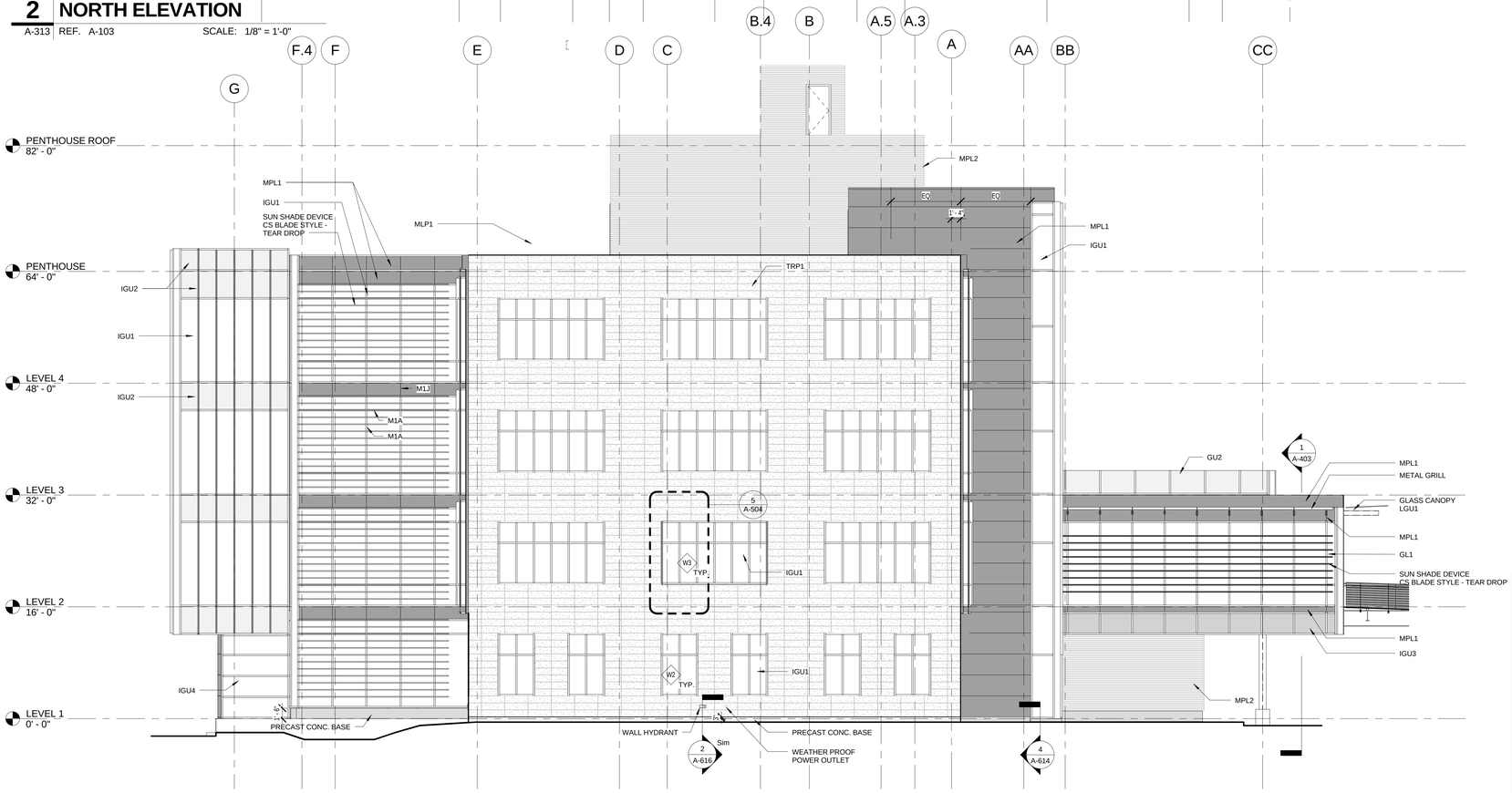

1 SOUTH ELEVATION

A-313 REF. A-103 SCALE: 1/8" = 1'-0"

MATERIAL LEGEND

- IGU1 - CLEAR GLASS
- IGU2/ GU2 - TRANSLUCENT GLASS
- IGU3 - SPANDREL GLASS
- MPL1 - METAL PANEL
- MPL2 - RIBBED METAL PANEL
- TRP1 - TERRACOTTA PANEL
- PRECAST CONC.

100% SUBMITTAL

AECOM

AECOM TECHNICAL SERVICES, INC.
3101 WILSON BOULEVARD
SUITE 900
ARLINGTON, VA 22201

T: 703-682-4900 F: 703.682.4901
www.aecom.com

SEAL AREA

BOARD OF ARCHITECTS 10164 EDWARD D. WEIMER STATE OF MARYLAND

KEY PLAN

REV	DATE	DESCRIPTION	S&R BR.	CUSTOMER	PM	SECT. HEAD

	INITIALS	DATE
DRAWN BY	LA/NS	
CHECKED BY	BW/MW	
A-E MANAGER	EW	
ENVIRONMENTAL BRANCH	JH	
SAFETY BRANCH	CS	
CM	MMD	
PM	RWP	
CUSTOMER	JWB	
ENG. BRANCH	DGL	
ARCHITECTURE		

ENLARGED BUILDING ELEVATIONS

A-313

FLIGHT PROJECTS BUILDING

NATIONAL AERONAUTICS AND SPACE ADMINISTRATION

GODDARD SPACE FLIGHT CENTER GREENBELT, MARYLAND
FACILITIES MANAGEMENT DIVISION

DATE ISSUED	CoF CODE OR WR#	AECOM PROJECT NO.	SCALE
10/12/2012	12GXAZ	60187636	1/8" = 1'-0"

FILE DATE: 10/11/2012 4:04:44 PM

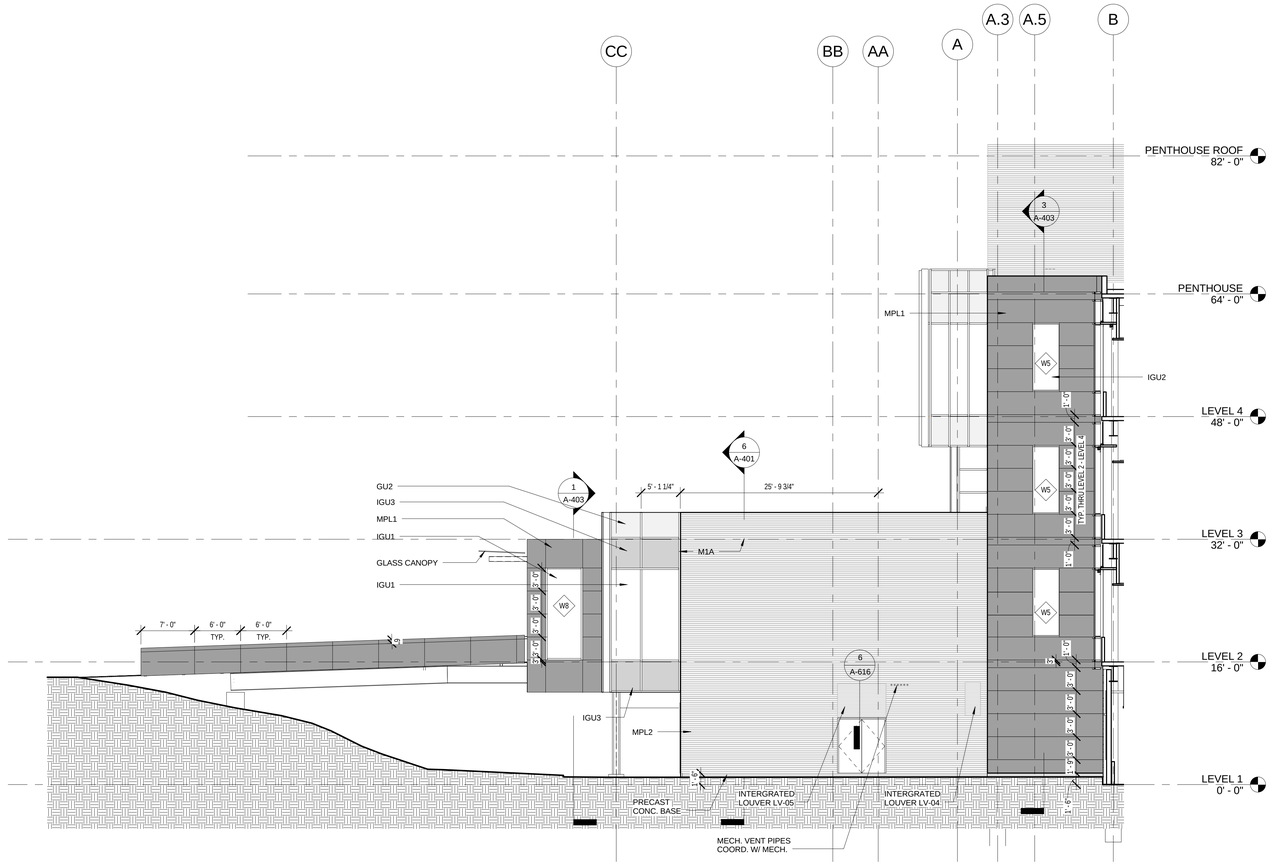

1 NORTH ELEVATION AT SYMPOSIUM

A-314 REF. A-103 SCALE: 1/8" = 1'-0"

100% SUBMITTAL

AECOM

AECOM TECHNICAL SERVICES, INC.
3101 WILSON BOULEVARD
SUITE 900
ARLINGTON, VA 22201

T: 703-682-4900 F: 703.682.4901
www.aecom.com

SEAL AREA

BOARD OF ARCHITECTS
10394
REGISTERED ARCHITECT
STATE OF MARYLAND

KEY PLAN

REV	DATE	DESCRIPTION	S&R BR.	CUSTOMER	PM	SECT. HEAD

	INITIALS	DATE
DRAWN BY	LA/NS	
CHECKED BY	BW/MW	
A-E MANAGER	EW	
ENVIRONMENTAL BRANCH	JH	
SAFETY BRANCH	CS	
CM	MMD	
PM	RWP	
CUSTOMER	JWB	
ENG. BRANCH	DGL	

ENLARGED BUILDING ELEVATIONS

A-314

FLIGHT PROJECTS BUILDING

NATIONAL AERONAUTICS AND SPACE ADMINISTRATION

GODDARD SPACE FLIGHT CENTER GREENBELT, MARYLAND
FACILITIES MANAGEMENT DIVISION

DATE ISSUED	CoF CODE OR WR#	AECOM PROJECT NO.	SCALE
10/12/2012	12GXAZ	60187636	1/8" = 1'-0"

FILE DATE: 10/11/2012 4:05:06 PM

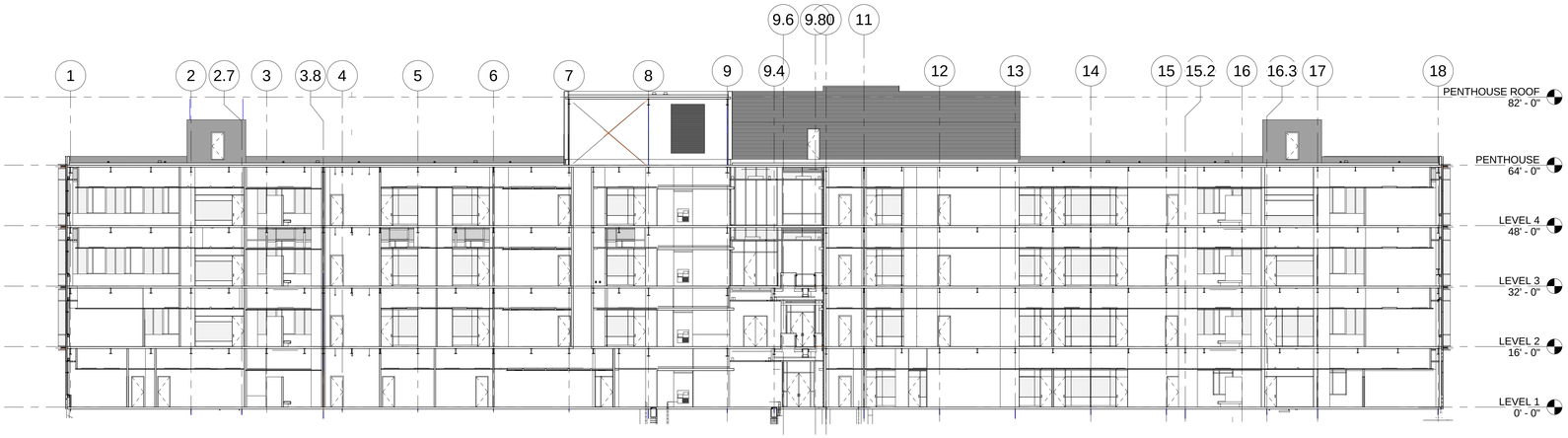

1 BUILDING SECTION 01

A-321 REF. A-101 SCALE: 1/16" = 1'-0"

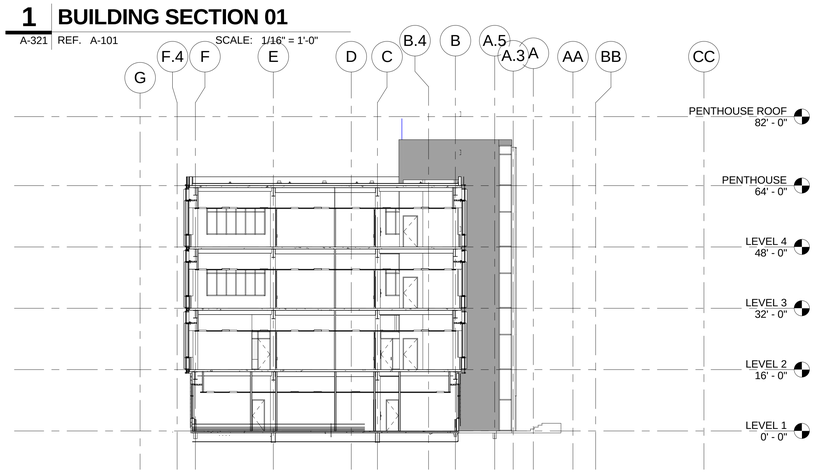

2 BUILDING SECTION 02

A-321 REF. A-101 SCALE: 1/16" = 1'-0"

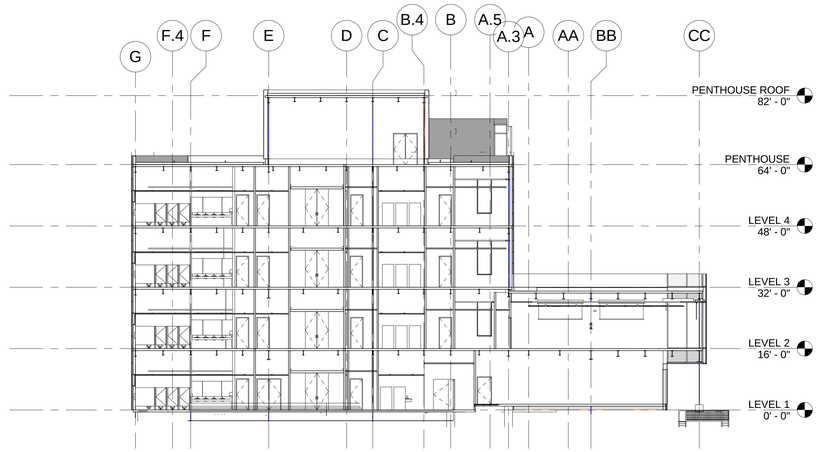

3 BUILDING SECTION 03

A-321 REF. A-101 SCALE: 1/16" = 1'-0"

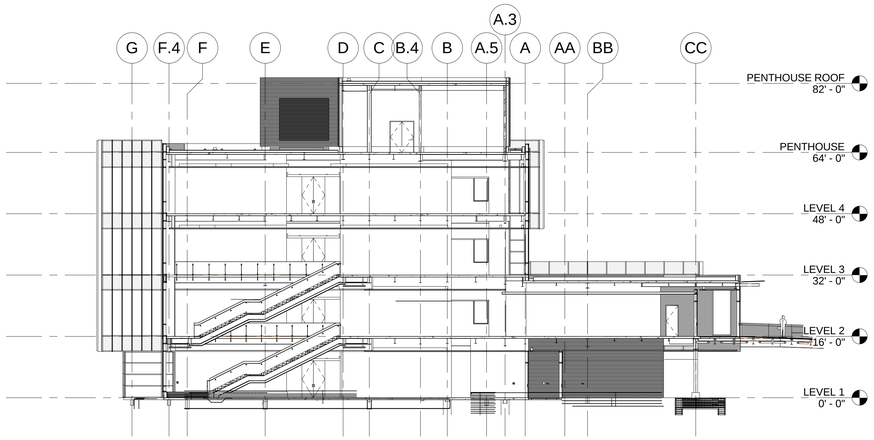

4 BUILDING SECTION 04

A-321 REF. A-101 SCALE: 1/16" = 1'-0"

100% SUBMITTAL

AECOM

AECOM TECHNICAL SERVICES, INC.
3101 WILSON BOULEVARD
SUITE 900
ARLINGTON, VA 22201

T: 703-682-4900 F: 703.682.4901
www.aecom.com

SEAL AREA

BOARD OF ARCHITECTURE
EDWARD W. WARNER
No. 10004
STATE OF MARYLAND

KEY PLAN

REV	DATE	DESCRIPTION	S&R BR.	CUSTOMER	PM	SECT. HEAD

	INITIALS	DATE
DRAWN BY	LA/NS	
CHECKED BY	BW/MW	
A-E MANAGER	EW	
ENVIRONMENTAL BRANCH	JH	
SAFETY BRANCH	CS	
CM	MMD	
PM	RWP	
CUSTOMER	JWB	
ENG. BRANCH	DGL	
ARCHITECTURE		

BUILDING SECTIONS

A-321

FLIGHT PROJECTS BUILDING

NATIONAL AERONAUTICS AND SPACE ADMINISTRATION

GODDARD SPACE FLIGHT CENTER GREENBELT, MARYLAND
FACILITIES MANAGEMENT DIVISION

DATE ISSUED	CoF CODE OR WR#	AECOM PROJECT NO.	SCALE
10/12/2012	12GXAZ	60187636	1/16" = 1'-0"

FILE DATE: 10/11/2012 4:06:01 PM

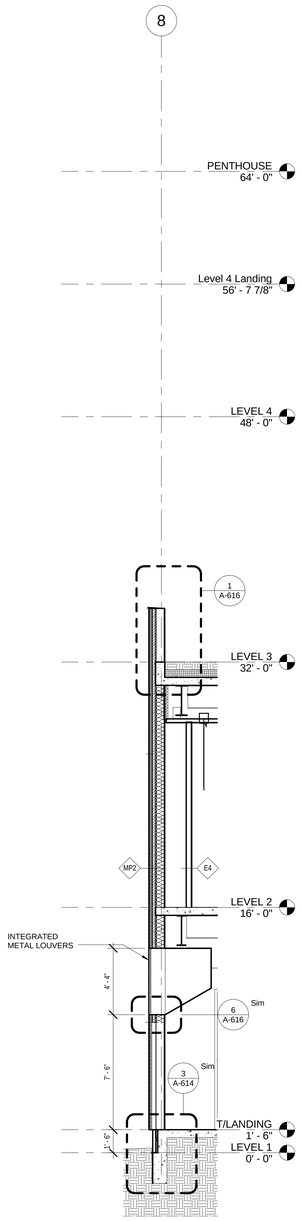

6 WALL SECTION

A-401 SCALE: 1/4" = 1'-0"

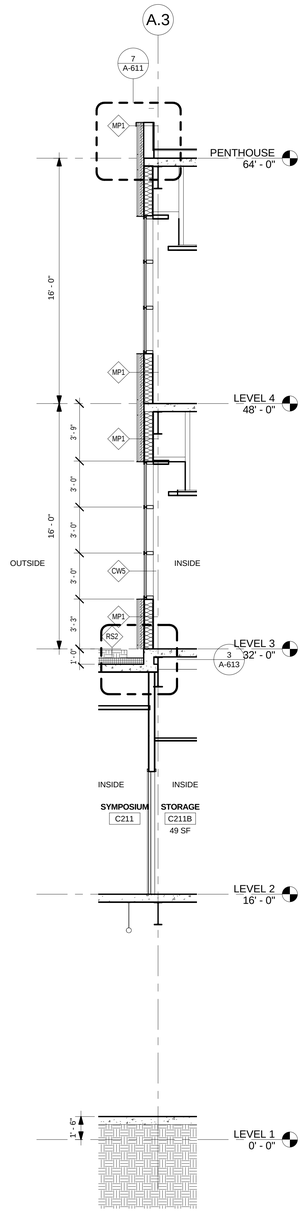

5 WALL SECTION

A-401 SCALE: 1/4" = 1'-0"

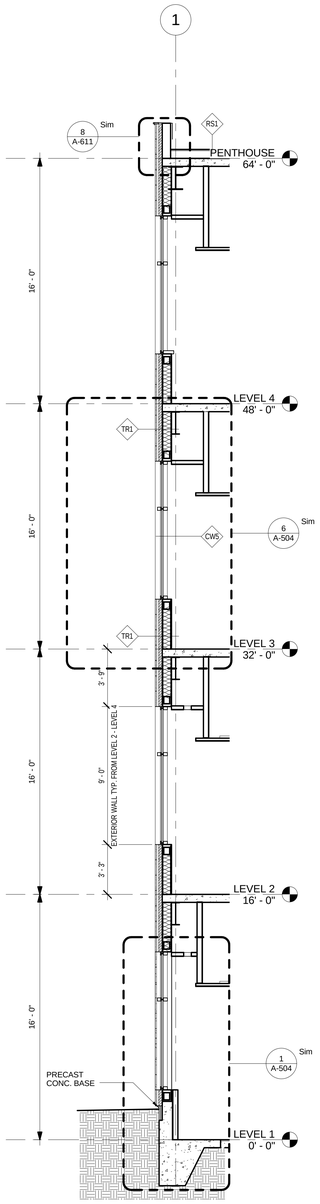

4 WALL SECTION

A-401 SCALE: 1/4" = 1'-0"

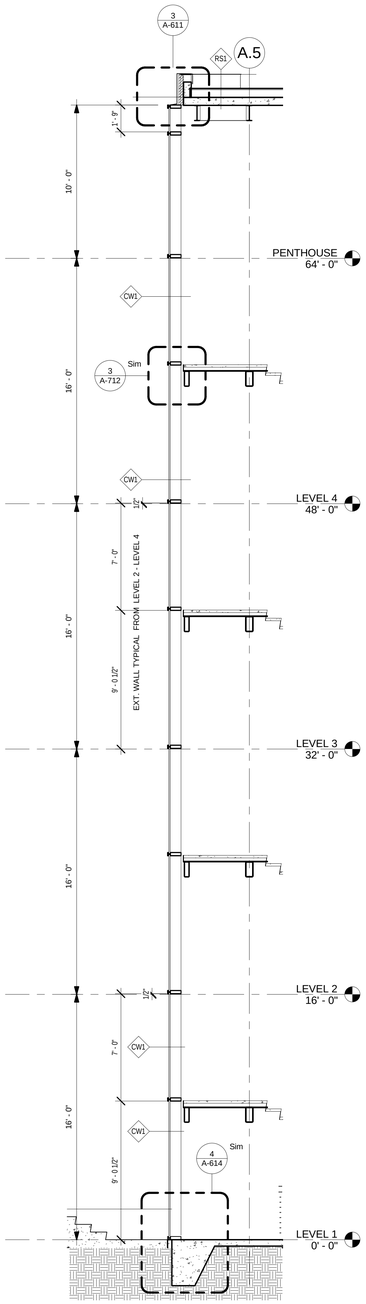

3 WALL SECTION

A-401 SCALE: 1/4" = 1'-0"

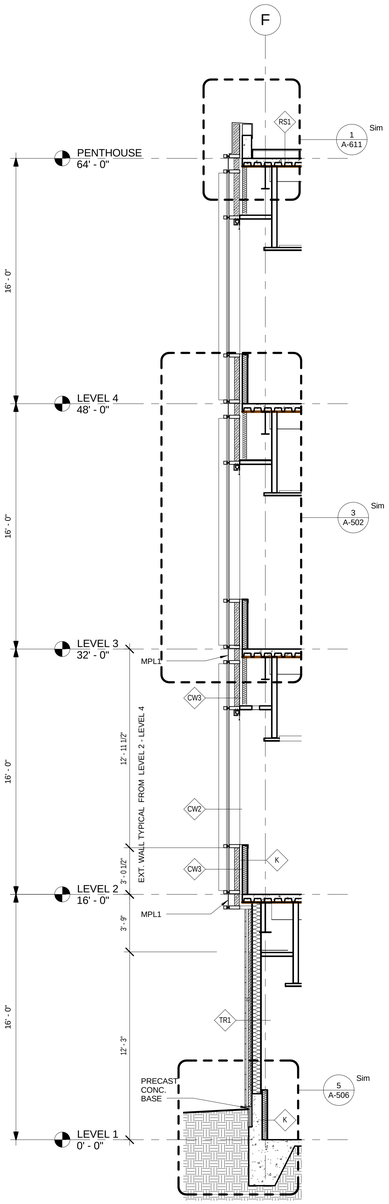

2 WALL SECTION

A-401 SCALE: 1/4" = 1'-0"

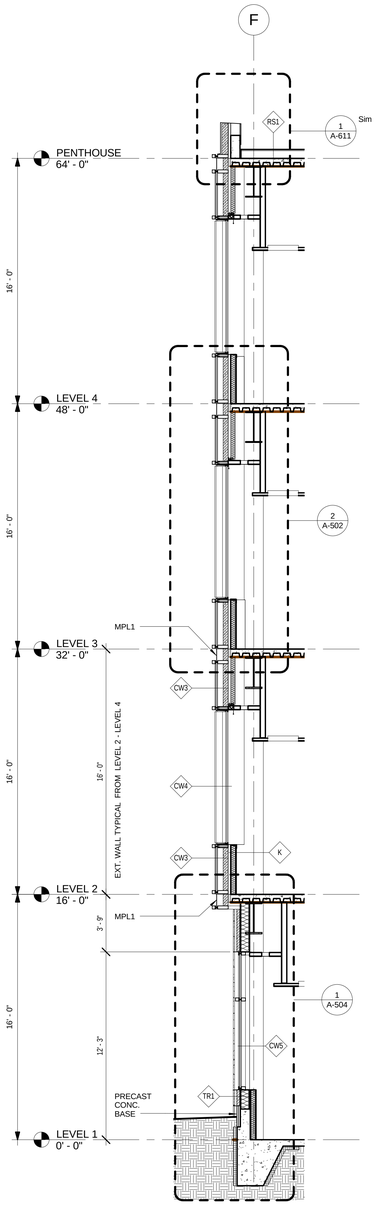

1 WALL SECTION

A-401 SCALE: 1/4" = 1'-0"

100% SUBMITTAL

AECOM

AECOM TECHNICAL SERVICES, INC.
3101 WILSON BOULEVARD
SUITE 900
ARLINGTON, VA 22201

T: 703-682-4900 F: 703.682.4901
www.aecom.com

SEAL AREA

BOARD OF ARCHITECTURE 10084 REGISTERED ARCHITECT STATE OF MARYLAND

KEY PLAN

REV	DATE	DESCRIPTION	S&R BR.	CUSTOMER	PM	SECT. HEAD

	INITIALS	DATE
DRAWN BY	LA/NS	
CHECKED BY	BW/MW	
A-E MANAGER	EW	
ENVIRONMENTAL BRANCH	JH	
SAFETY BRANCH	CS	
CM	MMD	
PM	RWP	
CUSTOMER	JWB	
ENG. BRANCH	DGL	
ARCHITECTURE		

WALL SECTIONS

A-401

FLIGHT PROJECTS BUILDING

NATIONAL AERONAUTICS AND SPACE ADMINISTRATION

GODDARD SPACE FLIGHT CENTER GREENBELT, MARYLAND
FACILITIES MANAGEMENT DIVISION

DATE ISSUED	CoF CODE OR WR#	AECOM PROJECT NO.	SCALE
10/12/2012	12GXAZ	60187636	1/4" = 1'-0"

FILE DATE: 10/11/2012 4:06:23 PM

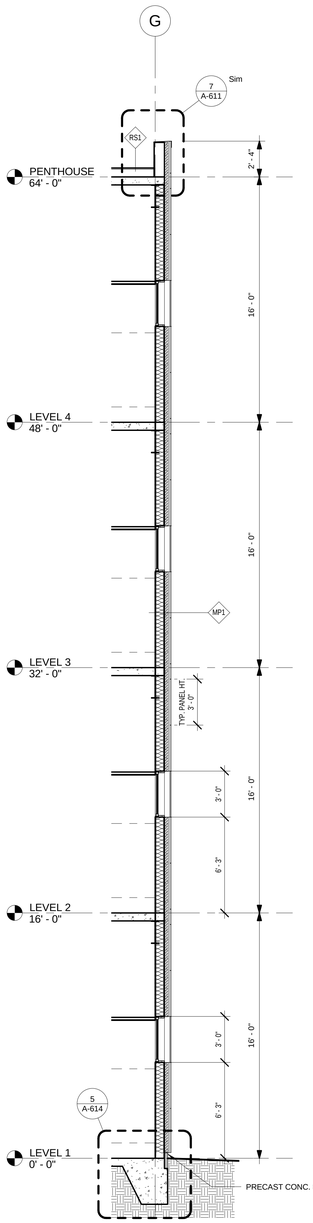

12 WALL SECTION

A-402 SCALE: 1/4" = 1'-0"

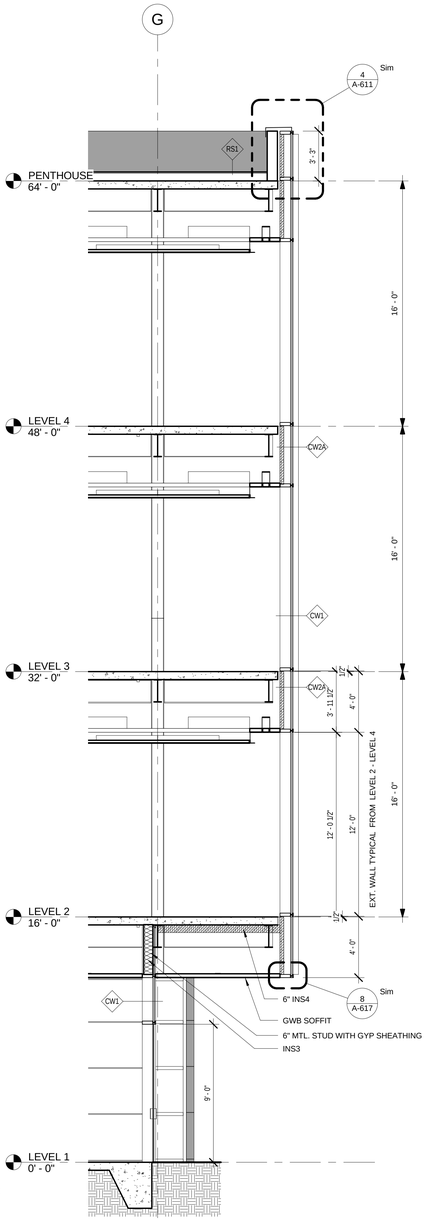

11 WALL SECTION

A-402 SCALE: 1/4" = 1'-0"

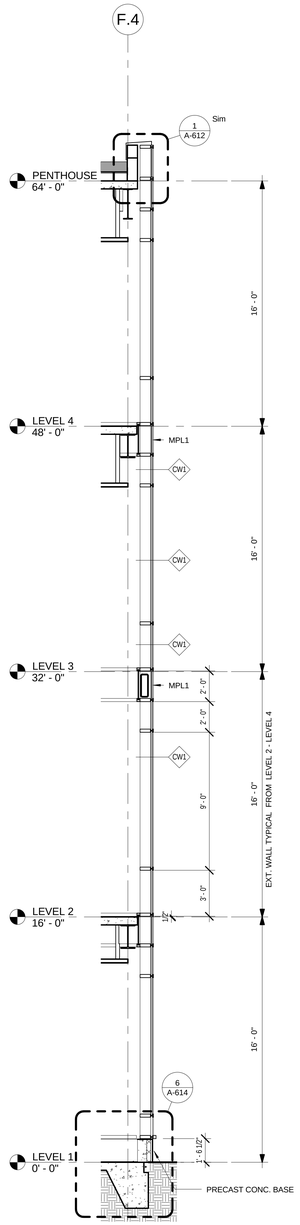

10 WALL SECTION

A-402 SCALE: 1/4" = 1'-0"

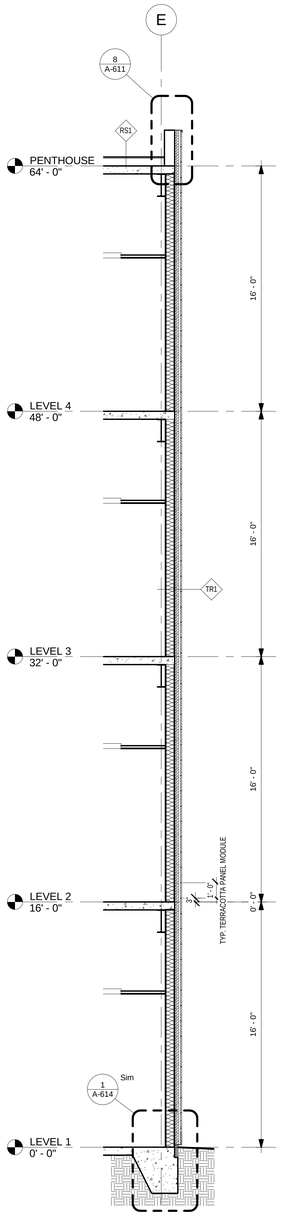

9 WALL SECTION

A-402 SCALE: 1/4" = 1'-0"

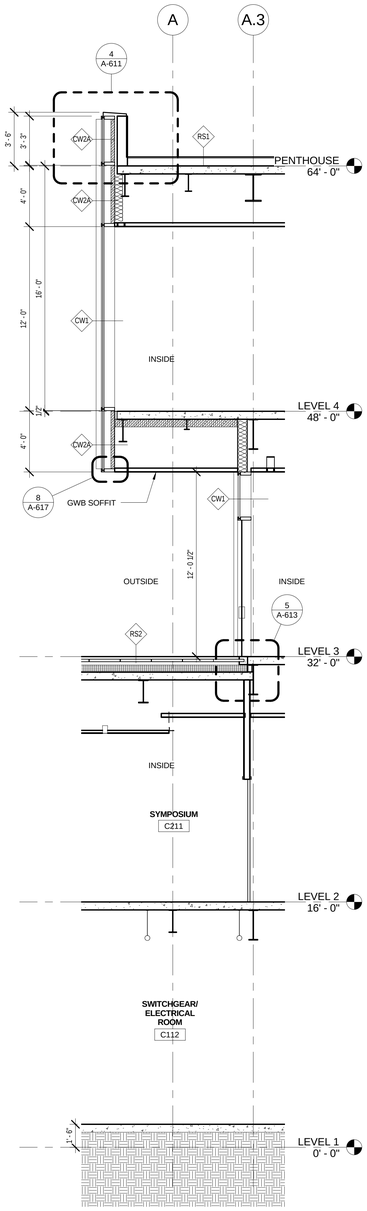

8 WALL SECTION

A-402 SCALE: 1/4" = 1'-0"

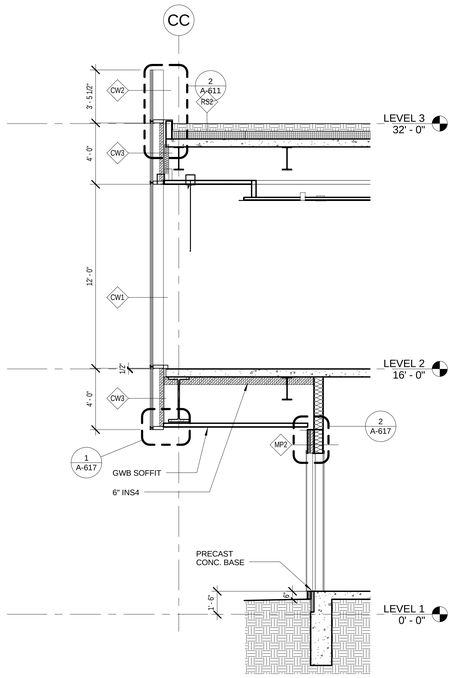

7 WALL SECTION

A-402 SCALE: 1/4" = 1'-0"

100% SUBMITTAL

AECOM

AECOM TECHNICAL SERVICES, INC.
3101 WILSON BOULEVARD
SUITE 900
ARLINGTON, VA 22201

T: 703-682-4900 F: 703.682.4901
www.aecom.com

SEAL AREA

BOARD OF ARCHITECTURE
EDWARD J. WEBER
ARCHITECT
101004
STATE OF MARYLAND

KEY PLAN

REV.	DATE	DESCRIPTION	S&R BR.	CUSTOMER	PM	SECT. HEAD

	INITIALS	DATE
DRAWN BY	LA/NS	
CHECKED BY	BW/MW	
A-E MANAGER	EW	
ENVIRONMENTAL BRANCH	JH	
SAFETY BRANCH	CS	
CM	MMD	
PM	RWP	
CUSTOMER	JWB	
ENG. BRANCH	DGL	
ARCHITECTURE		

WALL SECTIONS

A-402

FLIGHT PROJECTS BUILDING

NATIONAL AERONAUTICS AND SPACE ADMINISTRATION

GODDARD SPACE FLIGHT CENTER GREENBELT, MARYLAND
FACILITIES MANAGEMENT DIVISION

DATE ISSUED	CoF CODE OR WR#	AECOM PROJECT NO.	SCALE
10/12/2012	12GXAZ	60187636	1/4" = 1'-0"

FILE DATE: 10/11/2012 4:06:47 PM

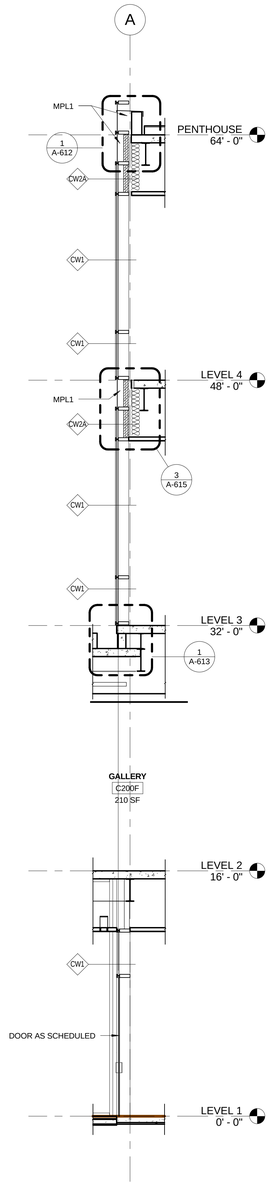

4 WALL SECTION

A-403 SCALE: 1/4" = 1'-0"

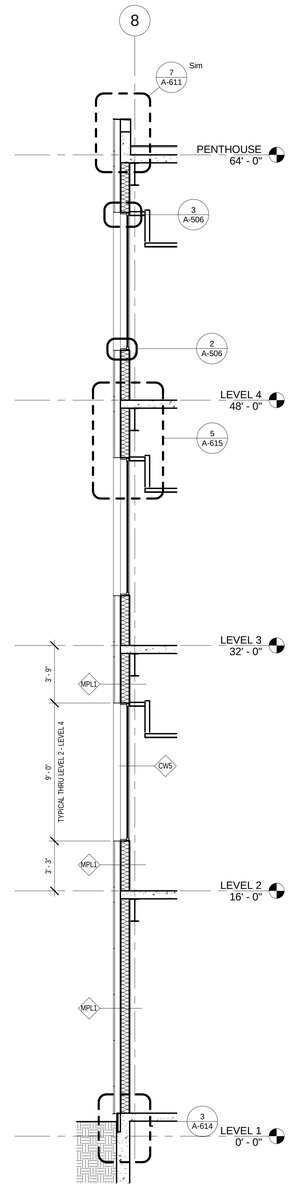

3 WALL SECTION

A-403 SCALE: 1/4" = 1'-0"

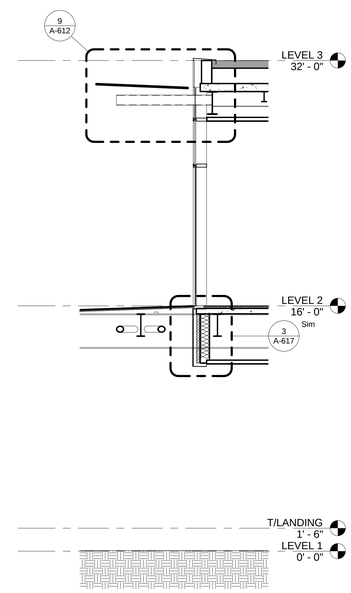

2 WALL SECTION

A-403 SCALE: 1/4" = 1'-0"

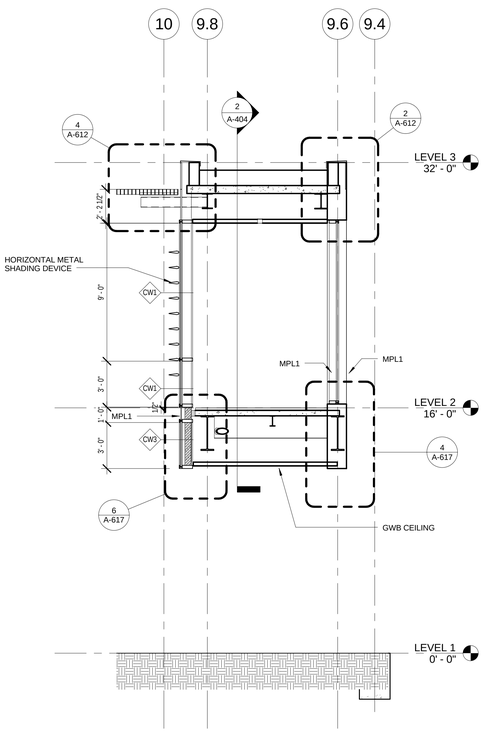

1 SECTION @ EAST VESTIBULE

A-403 SCALE: 1/4" = 1'-0"

100% SUBMITTAL

AECOM

AECOM TECHNICAL SERVICES, INC.
3101 WILSON BOULEVARD
SUITE 900
ARLINGTON, VA 22201

T: 703-682-4900 F: 703.682.4901
www.aecom.com

SEAL AREA

BOARD OF ARCHITECTS
10086
STATE OF MARYLAND

KEY PLAN

REV.	DATE	DESCRIPTION	S&R BR.	CUSTOMER	PM	SECT. HEAD

	INITIALS	DATE
DRAWN BY	LA/NS	
CHECKED BY	BW/MW	
A-E MANAGER	EW	
ENVIRONMENTAL BRANCH	JH	
SAFETY BRANCH	CS	
CM	MMD	
PM	RWP	
CUSTOMER	JWB	
ENG. BRANCH	DGL	

WALL SECTIONS

A-403

FLIGHT PROJECTS BUILDING

NATIONAL AERONAUTICS AND SPACE ADMINISTRATION

GODDARD SPACE FLIGHT CENTER GREENBELT, MARYLAND
FACILITIES MANAGEMENT DIVISION

DATE ISSUED	CoF CODE OR WR#	AECOM PROJECT NO.	SCALE
10/12/2012	12GXAZ	60187636	1/4" = 1'-0"

FILE DATE: 10/11/2012 4:06:57 PM

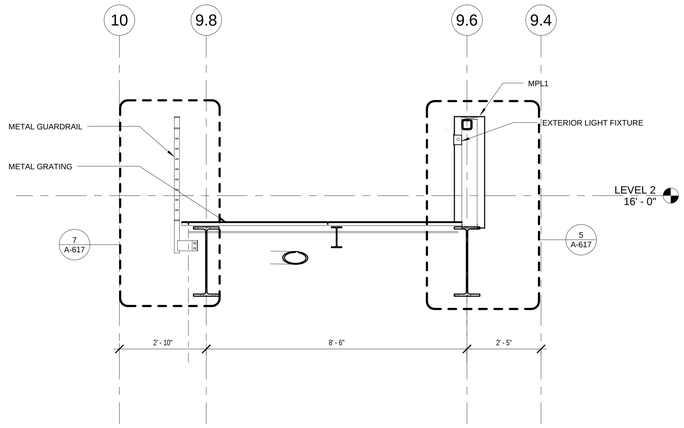

3 BRIDGE - CROSS SECTION

A-404 REF. A-404 SCALE: 1/2" = 1'-0"

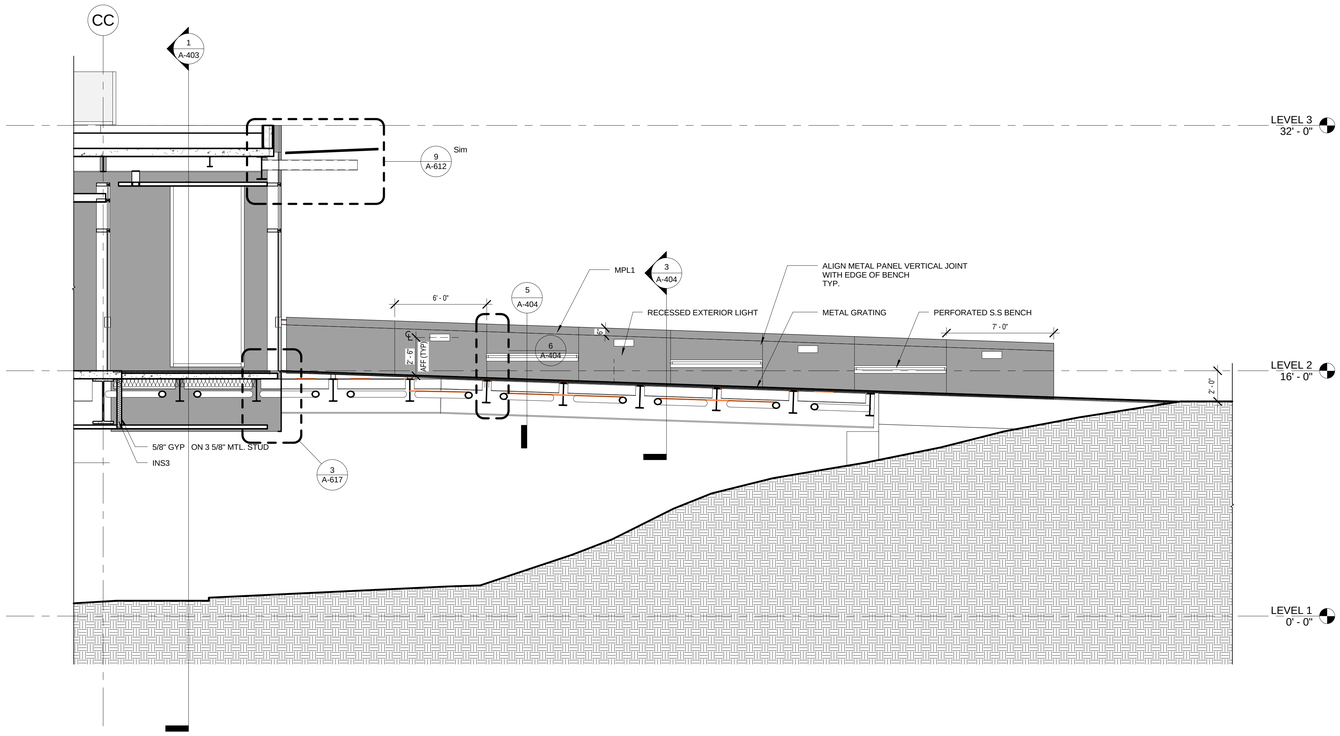

2 SECTION - BRIDGE

A-404 REF. A-403 SCALE: 1/4" = 1'-0"

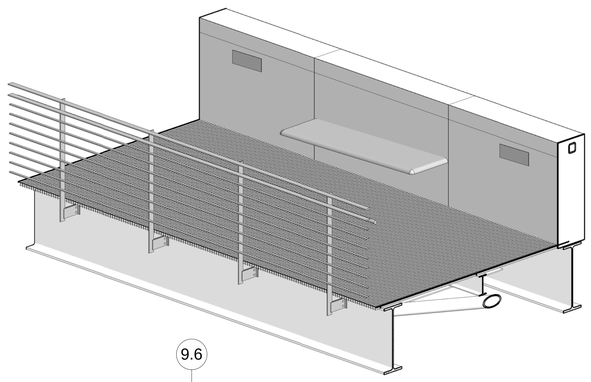

4 3D VIEW - BRIDGE

A-404 REF. SCALE:

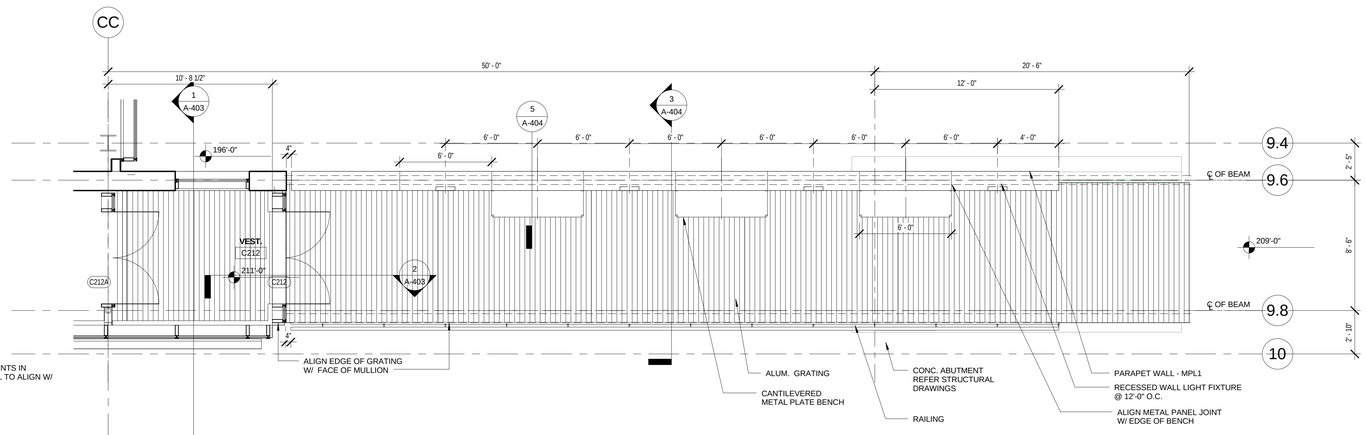

1 ENLARGED PLAN - PEDESTRIAN BRIDGE

A-404 REF. A-301 SCALE: 1/4" = 1'-0"

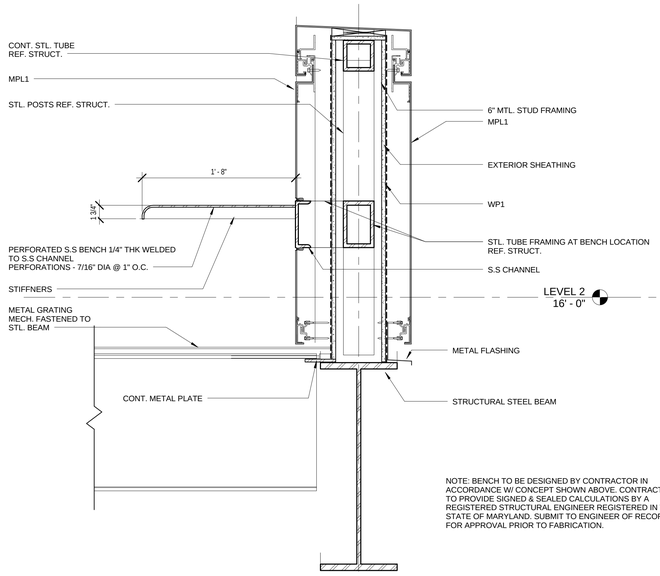

NOTE: BENCH TO BE DESIGNED BY CONTRACTOR IN ACCORDANCE W/ CONCEPT SHOWN ABOVE. CONTRACTOR TO PROVIDE SIGNED & SEALED CALCULATIONS BY A REGISTERED STRUCTURAL ENGINEER REGISTERED IN THE STATE OF MARYLAND. SUBMIT TO ENGINEER OF RECORD FOR APPROVAL PRIOR TO FABRICATION.

5 SECTION @ BENCH

A-404 REF. A-404 SCALE: 1 1/2" = 1'-0"

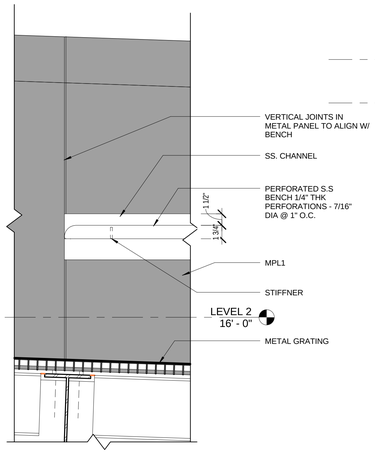

6 PART ELEVATION @ BENCH

A-404 REF. A-404 SCALE: 1 1/2" = 1'-0"

100% SUBMITTAL

AECOM
AECOM TECHNICAL SERVICES, INC.
3101 WILSON BOULEVARD
SUITE 900
ARLINGTON, VA 22201
T: 703-682-4900 F: 703.682.4901
www.aecom.com

SEAL AREA

BOARD OF ARCHITECTS
EDWARD WEBB
No. 10004
STATE OF MARYLAND

KEY PLAN

REV	DATE	DESCRIPTION	S&R BR.	CUSTOMER	PM	SECT. HEAD

	INITIALS	DATE
DRAWN BY	LA/NS	
CHECKED BY	BW/MW	
A-E MANAGER	EW	
ENVIRONMENTAL BRANCH	JH	
SAFETY BRANCH	CS	
CM	MMD	
PM	RWP	
CUSTOMER	JWB	
ENG. BRANCH	DGL	
ARCHITECTURE		

PEDESTRIAN BRIDGE DESIGN

A-404

FLIGHT PROJECTS BUILDING

NATIONAL AERONAUTICS AND SPACE ADMINISTRATION
GODDARD SPACE FLIGHT CENTER GREENBELT, MARYLAND
FACILITIES MANAGEMENT DIVISION

DATE ISSUED	CoF CODE OR WR#	AECOM PROJECT NO.	SCALE
10/12/2012	12GXAZ	60187636	As indicated

FILE DATE: 10/11/2012 4:07:20 PM

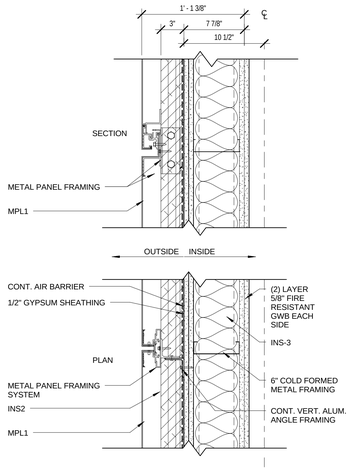

MP4 METAL PANEL
1 1/2"=1'-0"
TO MEET UL U419 - 2HR FIRE ASSEMBLY

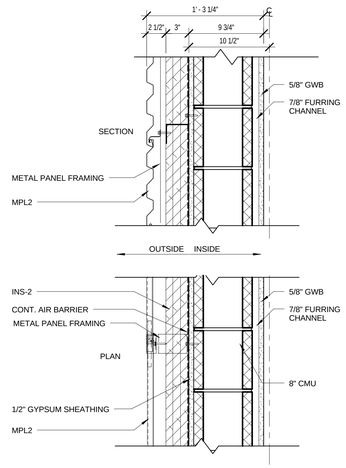

MP3 METAL PANEL
1 1/2"=1'-0"

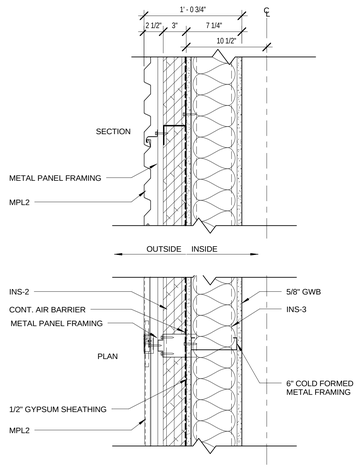

MP2 METAL PANEL
1 1/2"=1'-0"

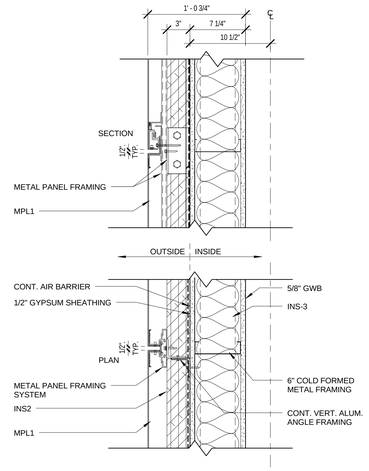

MP1 METAL PANEL
1 1/2"=1'-0"

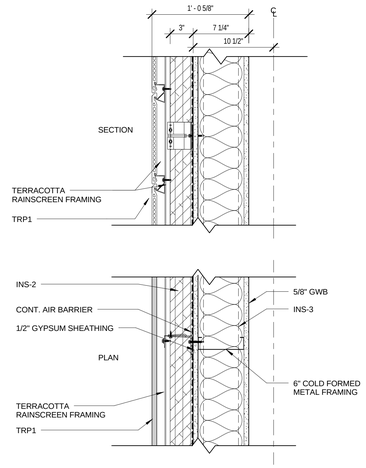

TR1 TERRACOTTA RAINSCREEN
1 1/2"=1'-0"

GENERAL NOTES:

1. ALL EXTERIOR BACK UP STL. STUD FRAMING TO BE 16 GUAGE MIN.

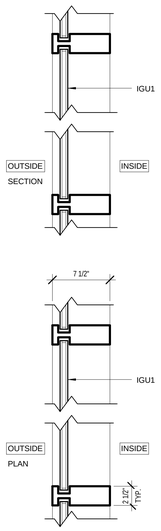

CW5 CURTAIN WALL - STANDARD SYSTEM CLEAR GLASS
1 1/2"=1'-0"

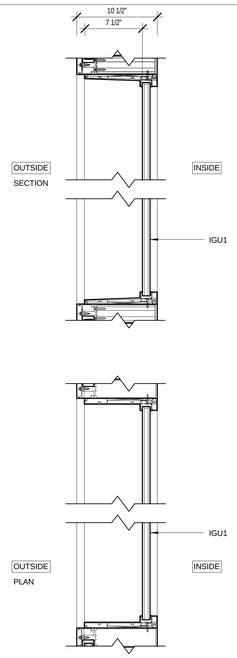

CW4 WINDOW - CLEAR GLASS
1 1/2"=1'-0"

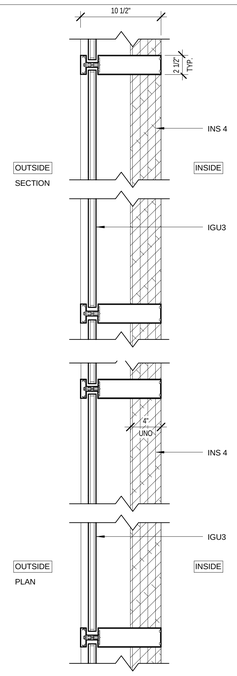

CW3 CURTAIN WALL -SPANDREL GLASS
1 1/2"=1'-0"

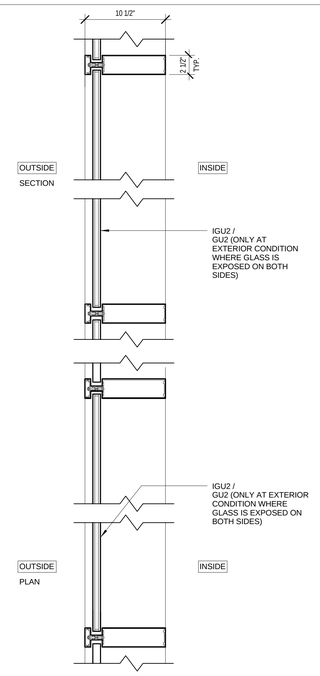

CW2 CURTAIN WALL - TRANSLUCENT GLASS
1 1/2"=1'-0"

CW2A CURTAIN WALL - STANDARD SYSTEM TRANSLUCENT GLASS W/ METAL PANEL . REFER DETAIL 3/A615
1 1/2"=1'-0"

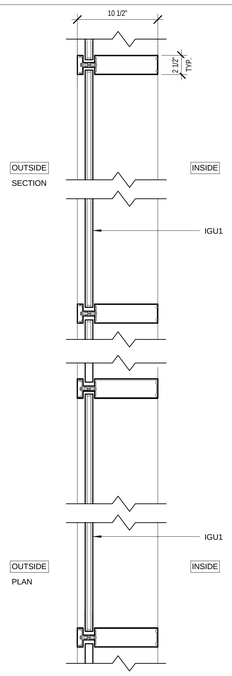

CW1 CURTAIN WALL - CLEAR GLASS
1 1/2"=1'-0"

100% SUBMITTAL

AECOM
AECOM TECHNICAL SERVICES, INC.
3101 WILSON BOULEVARD
SUITE 900
ARLINGTON, VA 22201
T: 703-682-4900 F: 703.682.4901
www.aecom.com

SEAL AREA

BOARD OF ARCHITECTURE 10004 BRIAN WOOD, WILSON STATE OF MARYLAND

KEY PLAN

REV	DATE	DESCRIPTION	S&R BR.	CUSTOMER	PM	SECT. HEAD

	INITIALS	DATE
DRAWN BY	LA/NS	
CHECKED BY	BW/MW	
A-E MANAGER	EW	
ENVIRONMENTAL BRANCH	JH	
SAFETY BRANCH	CS	
CM	MMD	
PM	RWP	
CUSTOMER	JWB	
ENG. BRANCH	DGL	
ARCHITECTURE		

EXTERIOR WALL TYPES

A-411

FLIGHT PROJECTS BUILDING

NATIONAL AERONAUTICS AND SPACE ADMINISTRATION
GODDARD SPACE FLIGHT CENTER GREENBELT, MARYLAND
FACILITIES MANAGEMENT DIVISION

DATE ISSUED	CoF CODE OR WR#	AECOM PROJECT NO.	SCALE
10/12/2012	12GXAZ	60187636	1 1/2" = 1'-0"

FILE DATE: 10/11/2012 4:07:32 PM

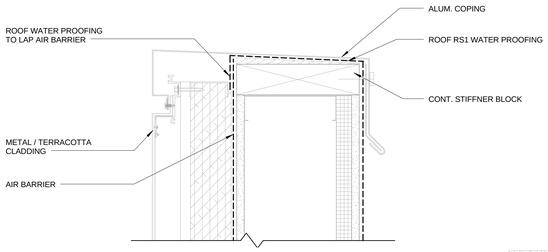

6 AIR BARRIER - WP - TRANSITION DETAIL @ PARAPET - TYP.

A-412 REF. SCALE: 3" = 1'-0"

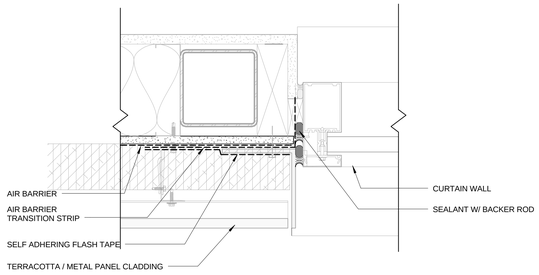

1 AIR BARRIER - WP - TRANSITION DETAIL @ WINDOW JAMB TYP.

A-412 REF. SCALE: 3" = 1'-0"

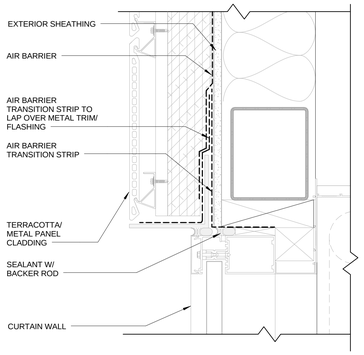

5 AIR BARRIER - WP - TRANSITION DETAIL @ WINDOW HEAD - TYP.

A-412 REF. SCALE: 3" = 1'-0"

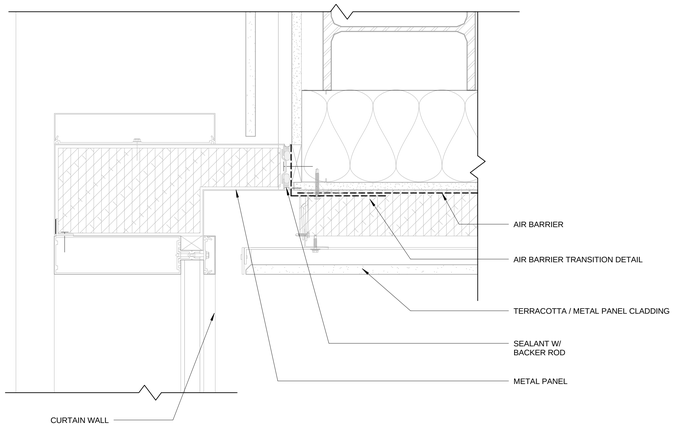

2 AIR BARRIER - WP - TRANSITION DETAIL @ CW-METAL PANEL / TERRACOTTA WALL INTERFACE - TYP.

A-412 REF. SCALE: 3" = 1'-0"

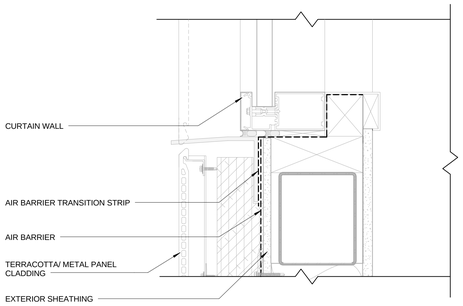

4 AIR BARRIER - WP - TRANSITION DETAIL@ WINDOW SILL - TYP.

A-412 REF. SCALE: 3" = 1'-0"

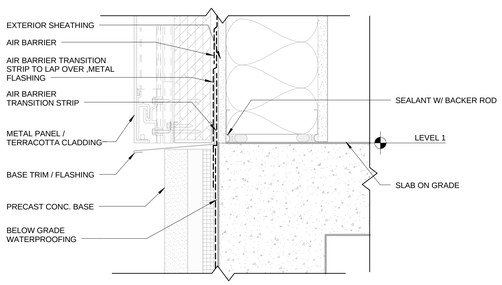

3 AIR BARRIER - WP - TRANSITION DETAIL @ BASE - TYP.

A-412 REF. SCALE: 3" = 1'-0"

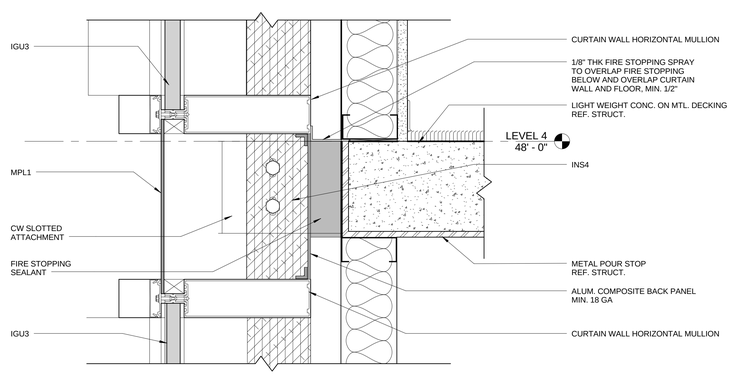

U.L. CW-D-2042

7 TYP. DETAIL - FIRE STOPPING @ CW & SLAB EDGE

A-412 REF. A-615 SCALE: 3" = 1'-0"

ROOF TYPES

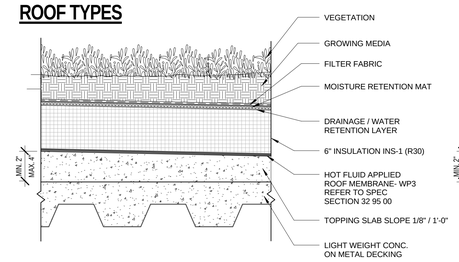

RS3 HOT FLUID APPLIED ROOF - VEGETATED

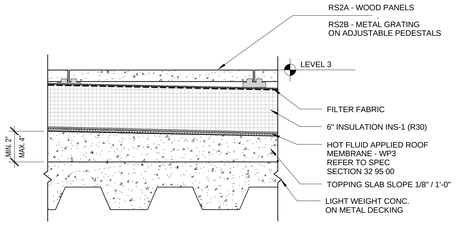

RS2A HOT FLUID APPLIED ROOF W/ WOOD PANELS ON ADJUSTABLE PEDESTALS

RS2B HOT FLUID APPLIED ROOF W/ METAL GRATING ON ADJUSTABLE PEDESTALS

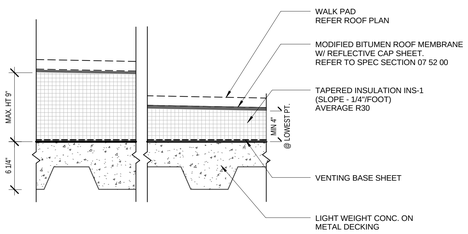

RS1 MODIFIED BITUMEN ROOF

RS1A MODIFIED BITUMEN ROOF W/ WALK PAD

GLAZING UNIT TYPES

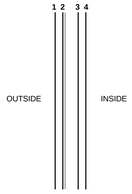

IGU1 - INSULATED GLAZING UNIT - CLEAR
HIGH PERFORMANCE COATING @ #2

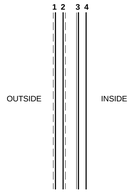

IGU2 - INSULATED GLAZING UNIT - ACID ETCHED
HIGH PERFORMANCE COATING @ #3
OPAQUE ACID ETCHED FINISH @ #1 & 2

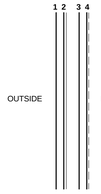

IGU3 - INSULATED GLAZING UNIT - SPANDREL
OPAQUE ACID ETCHED FINISH @ #2
SPANDREL COATING @ #4

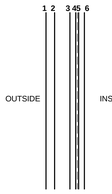

IGU4 - DECORATIVE COLOR GLASS UNIT
COLOR FILM INTERLAYER BETWEEN #4 & #5

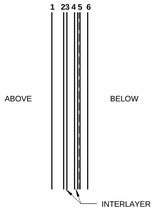

LGU1 - LAMINATED GLASS UNIT (ACID ETCHED)
OPAQUE ACID ETCHED FINISH @ #5

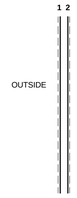

GU2 - MONOLITHIC GLASS UNIT
AT EXTERIOR CONDITION WHERE GLASS IS EXPOSED ON BOTH SIDES.
OPAQUE ACID ETCHED FINISH @ #1 & 2

WATER PROOFING TYPES

WATERPROOFING TYPES	DESCRIPTION	LOCATION	BASIS OF DESIGN
WP1	COLD FLUID APPLIED	BELOW GRADE	HENRY - AQUA BLOC CM100
WP2	CRYSTALLINE	ELEVATOR PIT	EUCLID TAMMS; HEY 'DI K-11
WP3	HOT FLUID APPLIED	VEGETATED ROOF	AMERICAN HYDROTECH - 6125FR

AIR/VAPOR BARRIER TYPES

TYPE	DESCRIPTION	LOCATION	BASIS OF DESIGN
AB1	VAPOR PERMEABLE AIR BARRIER	EXTERIOR WALLS	HENRY - AIR BLOC 31
VP1	VAPOR BARRIER	UNDER SLAB ON GRADE	HENRY

INSULATION TYPES

INSULATION TYPE	DESCRIPTION	LOCATION	BASIS OF DESIGN
INS1 ROOF	RIGID INSULATION	ROOF	STYROFOAM/ POLYISOSCYANURATE @ MOD. BIT. STYROFOAM PLAZA MATE @ROOF TERRACE
INS2	SEMI RIGID MINERAL WOOL INSULATION	EXTERIOR WALL	ROXUL - CAVITY ROCK DD, R VALUE 4.3/IN
INS3	BATT INSULATION	EXTERIOR WALL	ROXUL - COMFORT BATT, R VALUE
INS4	SEMI RIGID INSULATION	SPANDREL GLASS IN CURTAIN WALL	ROXUL - CURTAINROCK
INS5	RIGID INSULATION	EXTERIOR WALL / BELOW GRADE	

PANEL TYPES

PANELS	DESCRIPTION
MPL1	COMPOSITE METAL PANEL
MPL2	RIBBED PROFILE METAL PANEL
TRP1	TERACOTTA RAINSCREEN PANEL

100% SUBMITTAL

AECOM
AECOM TECHNICAL SERVICES, INC.
3101 WILSON BOULEVARD
SUITE 900
ARLINGTON, VA 22201
T: 703-682-4900 F: 703.682.4901
www.aecom.com

SEAL AREA

BOARD OF ARCHITECTS 10164 ERNESTO D. WEIMER STATE OF MARYLAND

KEY PLAN

REV	DATE	DESCRIPTION	S&R BR.	CUSTOMER	PM	SECT. HEAD

	INITIALS	DATE
DRAWN BY	LA/NS	
CHECKED BY	BW/MW	
A-E MANAGER	EW	
ENVIRONMENTAL BRANCH	JH	
SAFETY BRANCH	CS	
CM	MMD	
PM	RWP	
CUSTOMER	JWB	
ENG. BRANCH	DGL	

ARCHITECTURE

EXTERIOR ENVELOPE MATERIAL/ASSEMBLY TYPES

A-412

FLIGHT PROJECTS BUILDING

NATIONAL AERONAUTICS AND SPACE ADMINISTRATION
GODDARD SPACE FLIGHT CENTER GREENBELT, MARYLAND
FACILITIES MANAGEMENT DIVISION

DATE ISSUED	CoF CODE OR WR#	AECOM PROJECT NO.	SCALE
10/12/2012	12GXAZ	60187636	As indicated

FILE DATE: 10/11/2012 4:07:48 PM

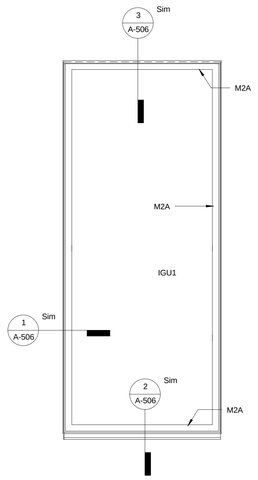

W8

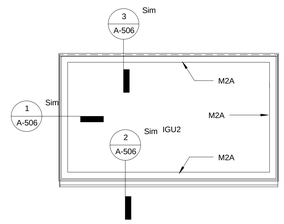

W7

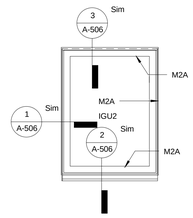

W6

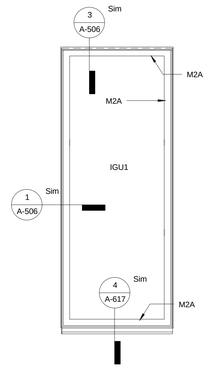

W5

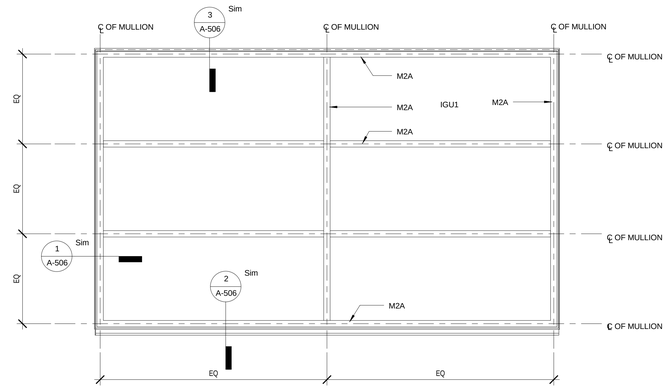

W4

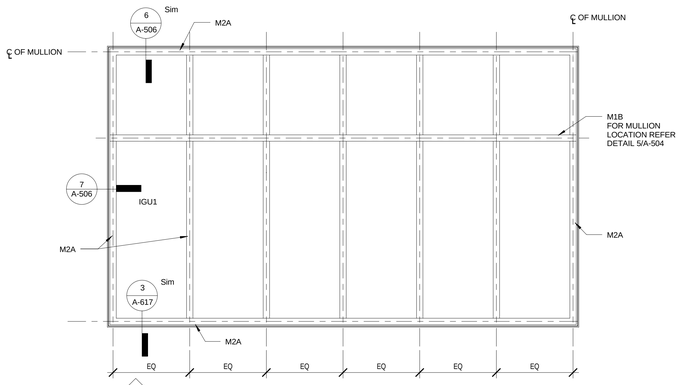

W3

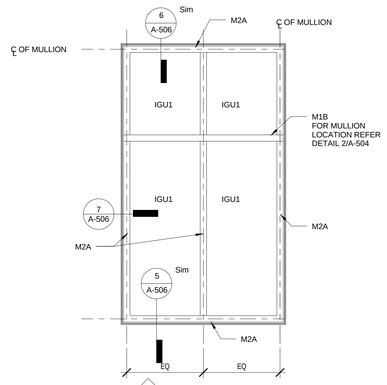

W2

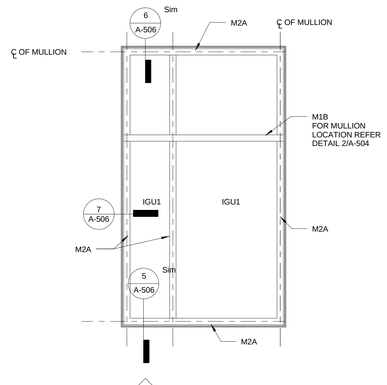

W1

1 EXTERIOR WINDOW TYPES

A-413 REF. SCALE: 1/2" = 1'-0"

100% SUBMITTAL

AECOM

AECOM TECHNICAL SERVICES, INC.
3101 WILSON BOULEVARD
SUITE 900
ARLINGTON, VA 22201

T: 703-682-4900 F: 703.682.4901
www.aecom.com

SEAL AREA

BOARD OF ARCHITECTS
EDWARD W. WARNER
STATE OF MARYLAND

KEY PLAN

REV	DATE	DESCRIPTION	S&R BR.	CUSTOMER	PM	SECT. HEAD

	INITIALS	DATE
DRAWN BY	LA/NS	
CHECKED BY	BW/MW	
A-E MANAGER	EW	
ENVIRONMENTAL BRANCH	JH	
SAFETY BRANCH	CS	
CM	MMD	
PM	RWP	
CUSTOMER	JWB	
ENG. BRANCH	DGL	

EXTERIOR WINDOW TYPES

A-413

FLIGHT PROJECTS BUILDING

NATIONAL AERONAUTICS AND SPACE ADMINISTRATION

GODDARD SPACE FLIGHT CENTER GREENBELT, MARYLAND
FACILITIES MANAGEMENT DIVISION

DATE ISSUED	CoF CODE OR WR#	AECOM PROJECT NO.	SCALE
10/12/2012	12GXAZ	60187636	1/2" = 1'-0"

FILE DATE: 10/11/2012 4:07:58 PM

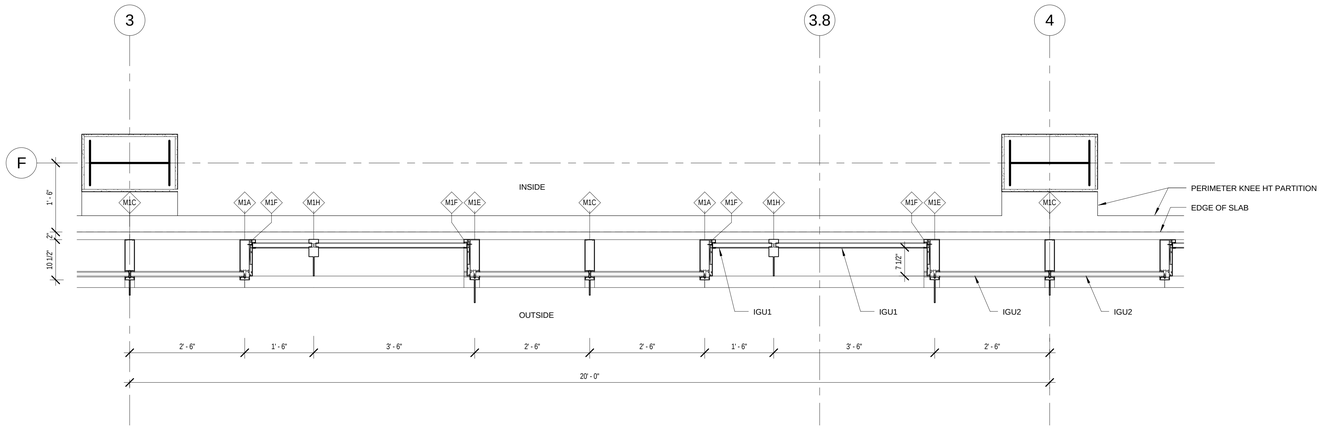

1 ENLARGED PLAN - TYPICAL BAY - CURTAIN WALL

A-501 REF. A-102a SCALE: 3/4" = 1'-0"

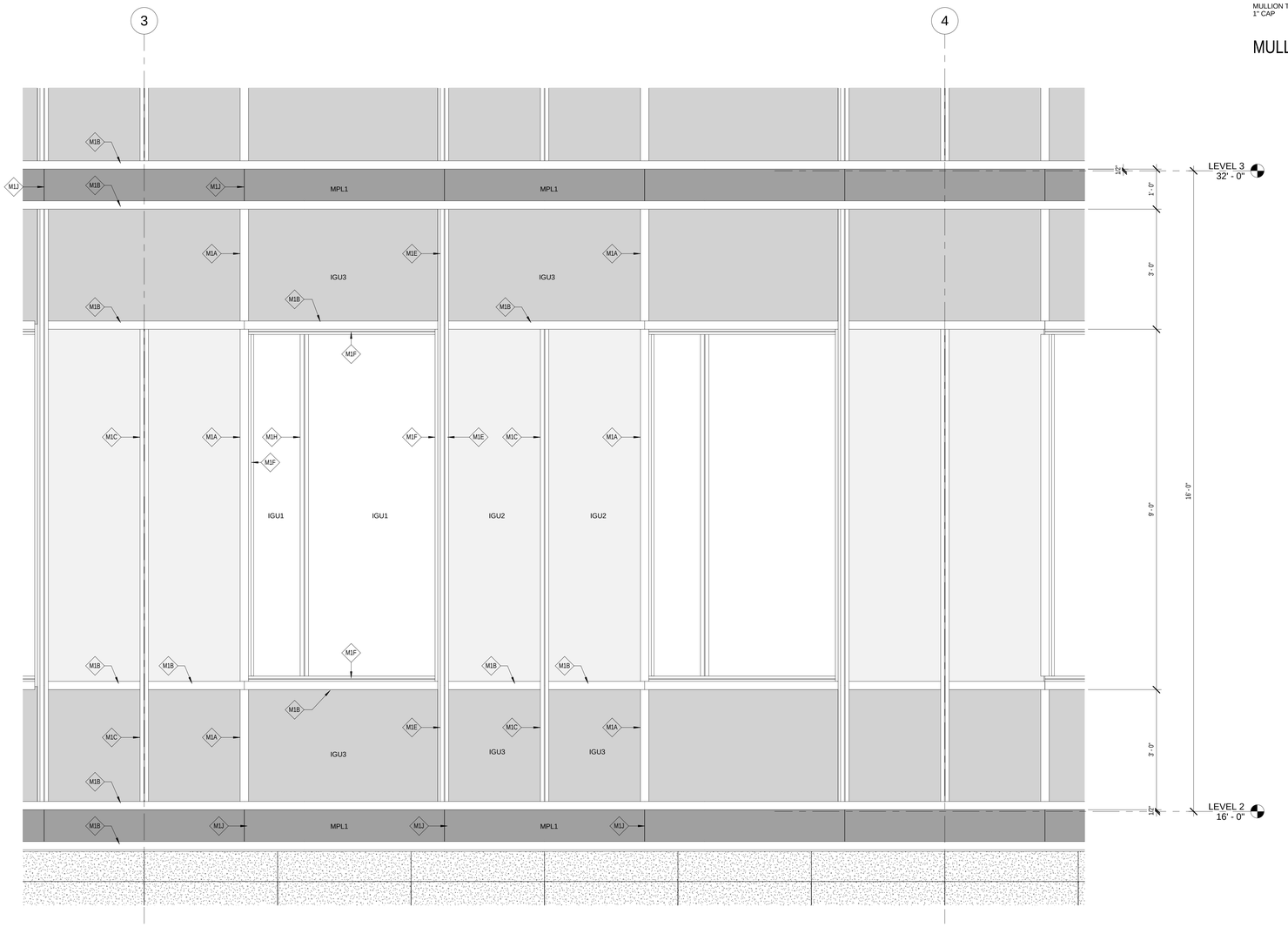

2 TYPICAL CURTAIN WALL SEGMENT

A-501 REF. A-103 SCALE: 3/4" = 1'-0"

NOTE: REFER TO DRAWING A-412 FOR GLAZING UNIT TYPE

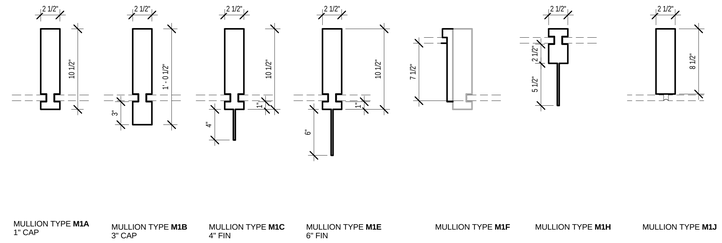

MULLION TYPE **M1A** 1" CAP | MULLION TYPE **M1B** 3" CAP | MULLION TYPE **M1C** 4" FIN | MULLION TYPE **M1E** 6" FIN | MULLION TYPE **M1F** | MULLION TYPE **M1H** | MULLION TYPE **M1J**

MULLION TYPES - 10 1/2" DEEP CURTAIN WALL SYSTEM

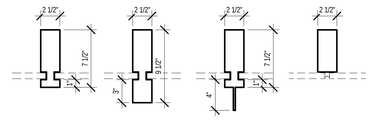

MULLION TYPE **M2A** 1" CAP | MULLION TYPE **M2B** 3" CAP | MULLION TYPE **M2C** 4" FIN | MULLION TYPE **M2G** CAPLESS

MULLION TYPES - 7 1/2" DEEP CURTAIN WALL SYSTEM

MATERIAL LEGEND

- IGU1 - CLEAR GLASS
- IGU2/ GU2 - TRANSLUCENT GLASS
- IGU3 - SPANDREL GLASS
- MPL1 - METAL PANEL
- MPL2 - RIBBED METAL PANEL
- TRP1 - TERRACOTTA PANEL
- PRECAST CONC.

100% SUBMITTAL

AECOM
AECOM TECHNICAL SERVICES, INC.
3101 WILSON BOULEVARD
SUITE 900
ARLINGTON, VA 22201
T: 703-682-4900 F: 703.682.4901
www.aecom.com

SEAL AREA

BOARD OF ARCHITECTS 10394 REGISTERED ARCHITECT STATE OF MARYLAND

KEY PLAN

REV	DATE	DESCRIPTION	S&R BR.	CUSTOMER	PM	SECT. HEAD

	INITIALS	DATE
DRAWN BY	LA/NS	
CHECKED BY	BW/MW	
A-E MANAGER	EW	
ENVIRONMENTAL BRANCH	JH	
SAFETY BRANCH	CS	
CM	MMD	
PM	RWP	
CUSTOMER	JWB	
ENG. BRANCH	DGL	
ARCHITECTURE		

EXTERIOR ENCLOSURE CONCEPT

A-501

FLIGHT PROJECTS BUILDING

NATIONAL AERONAUTICS AND SPACE ADMINISTRATION

GODDARD SPACE FLIGHT CENTER GREENBELT, MARYLAND
FACILITIES MANAGEMENT DIVISION

DATE ISSUED	CoF CODE OR WR#	AECOM PROJECT NO.	SCALE
10/12/2012	12GXAZ	60187636	As indicated

FILE DATE: 10/11/2012 4:08:16 PM

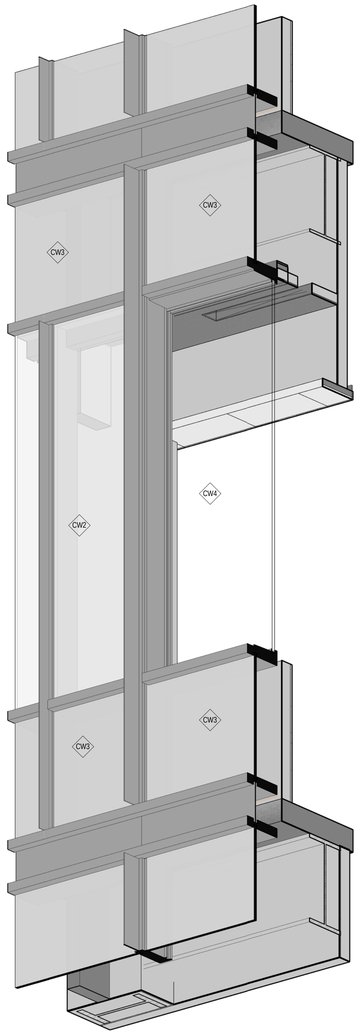

NOTE:

CW CURTAIN WALL ASSEMBLY. REFER TO DRAWING A-411.

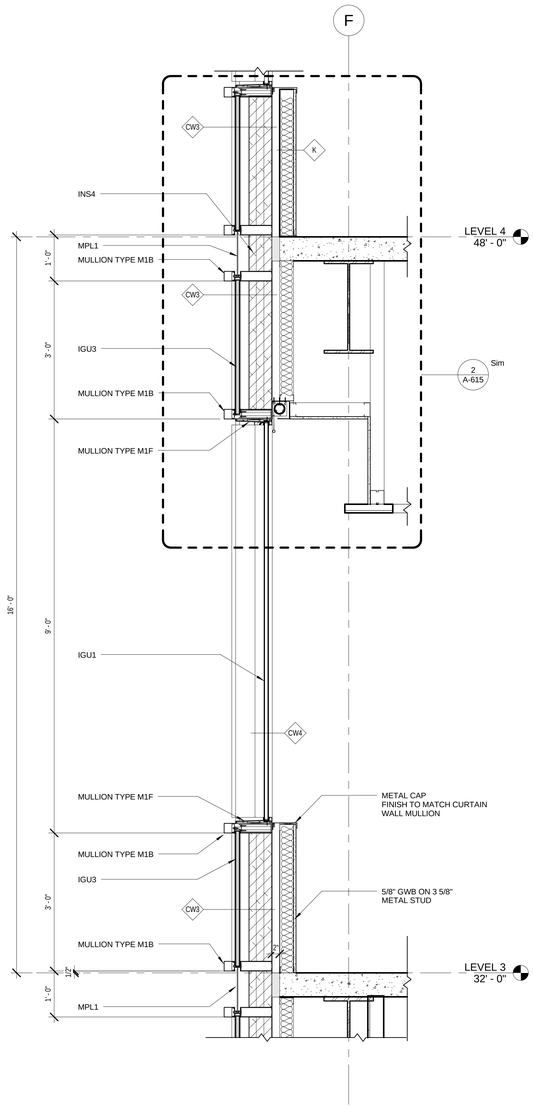

WALL SECTION - TYPICAL LEVEL - CURTAIN WALL

2 | A-502 | REF. A-401 | SCALE: 3/4" = 1'-0"

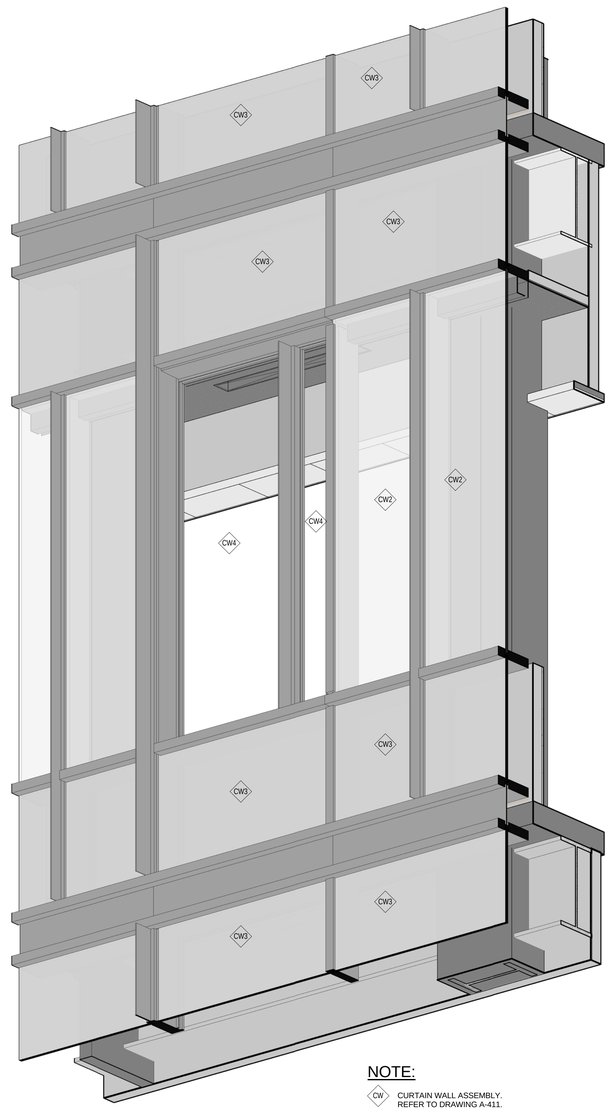

NOTE:

CW CURTAIN WALL ASSEMBLY. REFER TO DRAWING A-411.

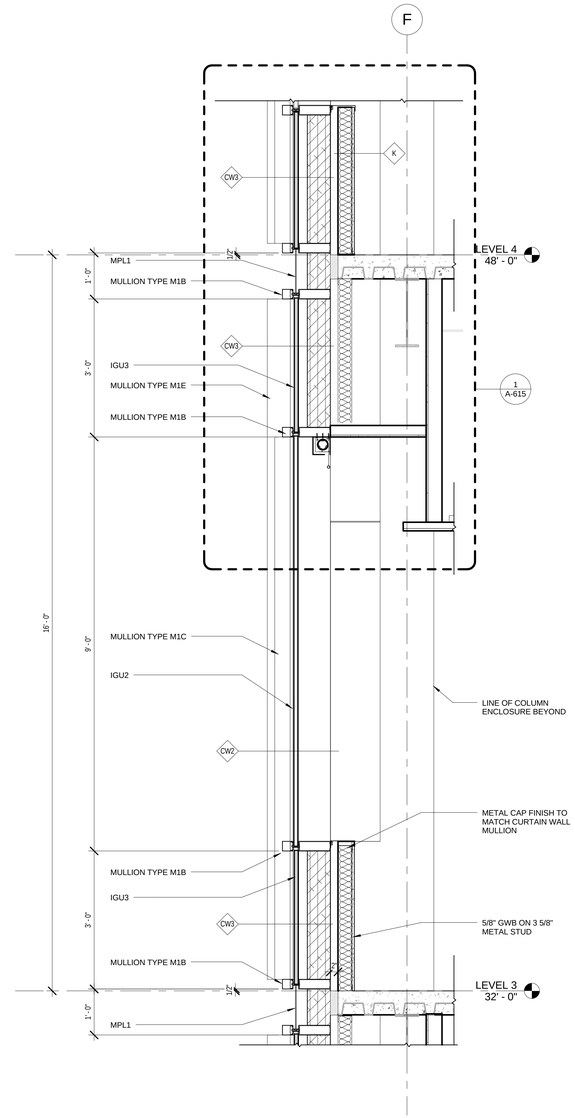

WALL SECTION - TYPICAL LEVEL - CURTAIN WALL

3 | A-502 | REF. A-401 | SCALE: 3/4" = 1'-0"

100% SUBMITTAL

AECOM

AECOM TECHNICAL SERVICES, INC.
3101 WILSON BOULEVARD
SUITE 900
ARLINGTON, VA 22201

T: 703-682-4900 F: 703.682.4901
www.aecom.com

SEAL AREA

BOARD OF ARCHITECTS
EDWARD L. WEISS
STATE OF MARYLAND

KEY PLAN

REV	DATE	DESCRIPTION	S&R BR.	CUSTOMER	PM	SECT. HEAD

	INITIALS	DATE
DRAWN BY	LA/NS	
CHECKED BY	BW/MW	
A-E MANAGER	EW	
ENVIRONMENTAL BRANCH	JH	
SAFETY BRANCH	CS	
CM	MMD	
PM	RWP	
CUSTOMER	JWB	
ENG. BRANCH	DGL	
ARCHITECTURE		

EXTERIOR ENCLOSURE CONCEPT

A-502

FLIGHT PROJECTS BUILDING

NATIONAL AERONAUTICS AND SPACE ADMINISTRATION

GODDARD SPACE FLIGHT CENTER GREENBELT, MARYLAND
FACILITIES MANAGEMENT DIVISION

DATE ISSUED	CoF CODE OR WR#	AECOM PROJECT NO.	SCALE
10/12/2012	12GXAZ	60187636	3/4" = 1'-0"

FILE DATE: 10/11/2012 4:08:35 PM

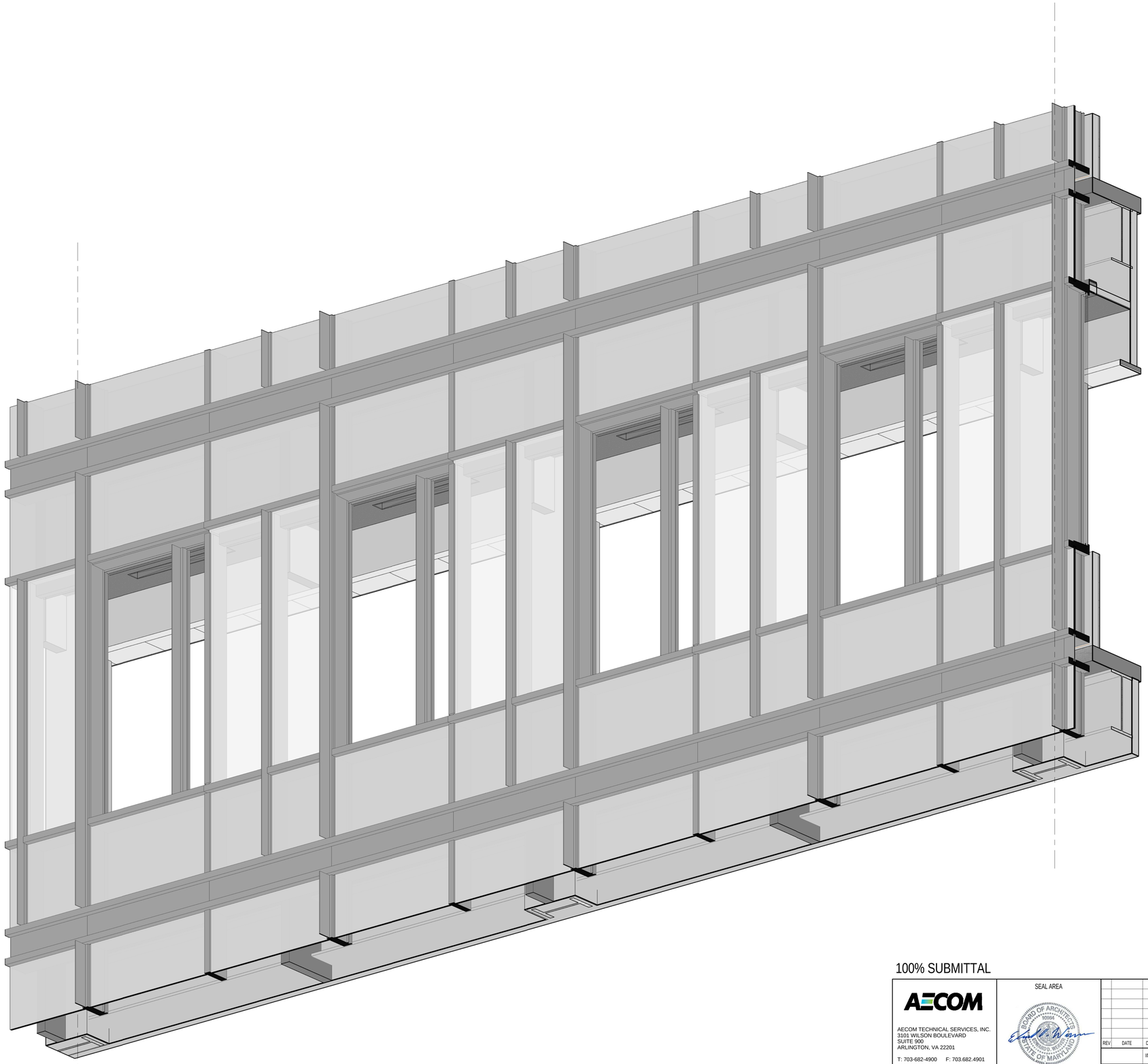

1 **CURTAIN WALL CONCEPT - TYPICAL BAY**

A-503 REF. SCALE:

100% SUBMITTAL

AECOM

AECOM TECHNICAL SERVICES, INC.
3101 WILSON BOULEVARD
SUITE 900
ARLINGTON, VA 22201

T: 703-682-4900 F: 703.682.4901
www.aecom.com

SEAL AREA

BOARD OF ARCHITECTURE 10984 ERIC D. WILSON STATE OF MARYLAND

KEY PLAN

REV	DATE	DESCRIPTION	S&R BR.	CUSTOMER	PM	SECT. HEAD

	INITIALS	DATE
DRAWN BY	LA/NS	
CHECKED BY	BW/MW	
A-E MANAGER	EW	
ENVIRONMENTAL BRANCH	JH	
SAFETY BRANCH	CS	
CM	MMD	
PM	RWP	
CUSTOMER	JWB	
ENG. BRANCH	DGL	
ARCHITECTURE		

EXTERIOR ENCLOSURE CONCEPT

A-503

FLIGHT PROJECTS BUILDING

NATIONAL AERONAUTICS AND SPACE ADMINISTRATION

GODDARD SPACE FLIGHT CENTER GREENBELT, MARYLAND
FACILITIES MANAGEMENT DIVISION

DATE ISSUED	CoF CODE OR WR#	AECOM PROJECT NO.	SCALE
10/12/2012	12GXAZ	60187636	

FILE DATE: 10/11/2012 4:08:59 PM

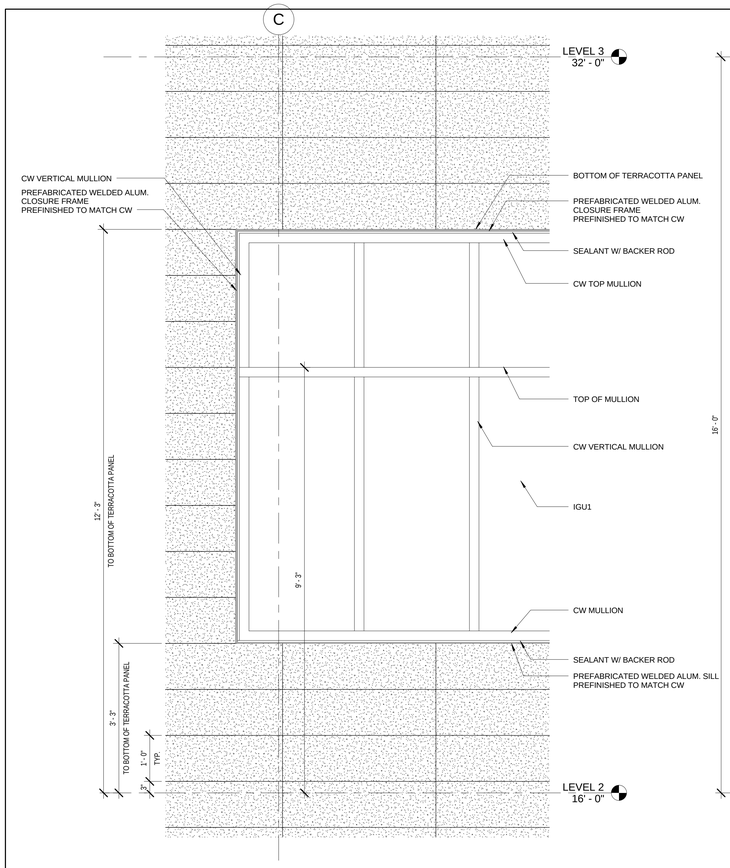

5 ENLARGED ELEVATION - WINDOW - TYP. LEVEL

A-504 REF. A-313 SCALE: 3/4" = 1'-0"

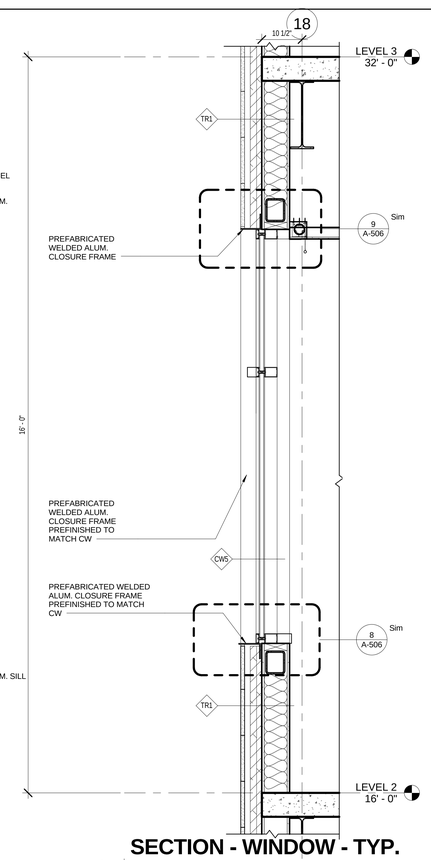

6 SECTION - WINDOW - TYP. LEVEL

A-504 REF. A-401 SCALE: 3/4" = 1'-0"

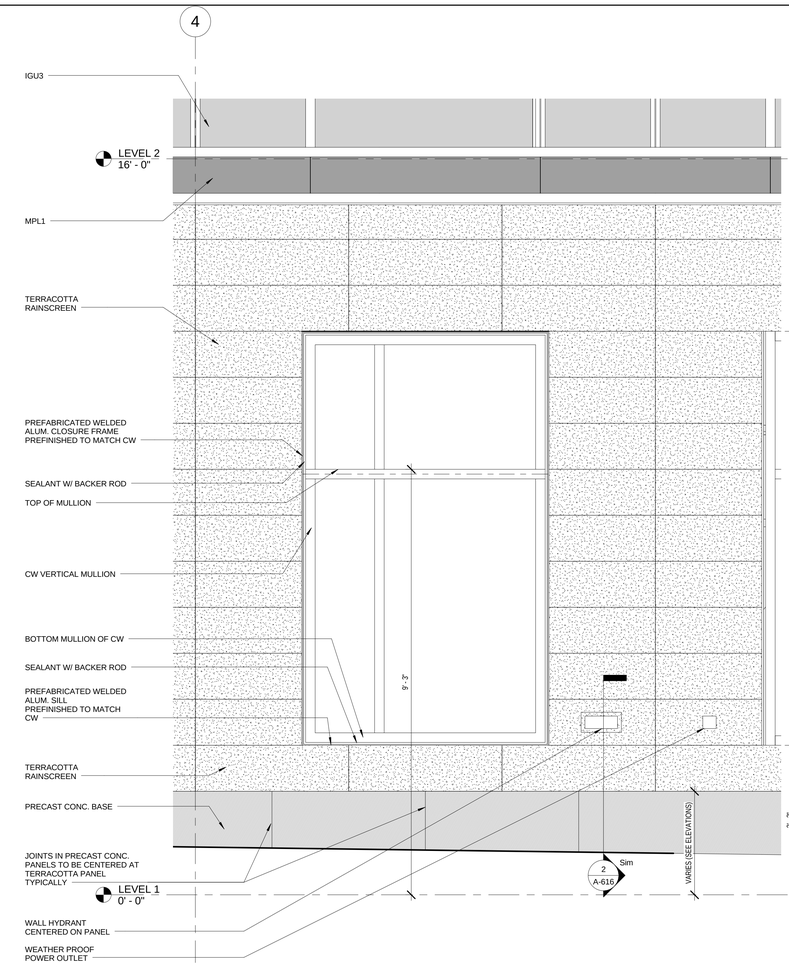

2 ENLARGED ELEVATION - WINDOW - LEVEL 1

A-504 REF. A-312 SCALE: 3/4" = 1'-0"

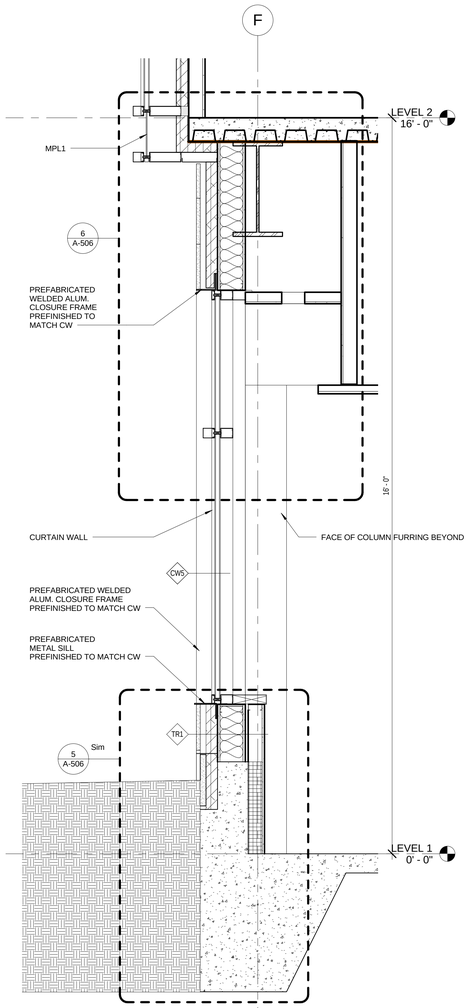

1 SECTION - WINDOW - LEVEL 1

A-504 REF. A-401 SCALE: 3/4" = 1'-0"

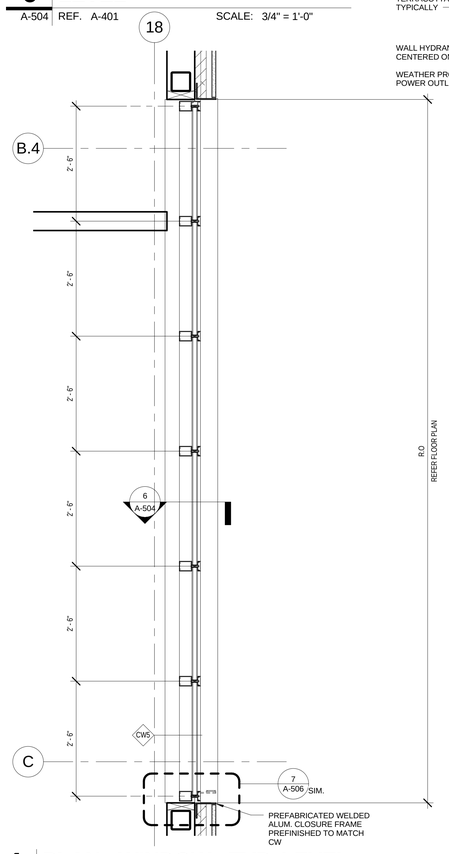

4 PLAN - WINDOW - TYP. LEVEL

A-504 REF. A-102b SCALE: 3/4" = 1'-0"

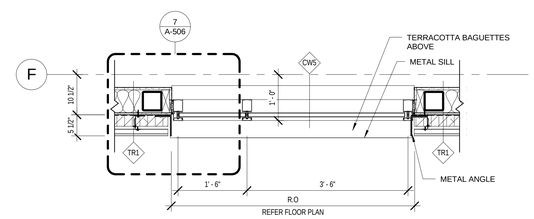

3 PLAN - WINDOW - LEVEL 1

A-504 REF. A-101a SCALE: 3/4" = 1'-0"

100% SUBMITTAL

AECOM

AECOM TECHNICAL SERVICES, INC.
3101 WILSON BOULEVARD
SUITE 900
ARLINGTON, VA 22201

T: 703-682-4900 F: 703.682.4901
www.aecom.com

SEAL AREA

BOARD OF ARCHITECTS
STATE OF MARYLAND

KEY PLAN

REV	DATE	DESCRIPTION	S&R BR.	CUSTOMER	PM	SECT. HEAD

	INITIALS	DATE
DRAWN BY	LA/NS	
CHECKED BY	BW/MW	
A-E MANAGER	EW	
ENVIRONMENTAL BRANCH	JH	
SAFETY BRANCH	CS	
CM	MMD	
PM	RWP	
CUSTOMER	JWB	
ENG. BRANCH	DGL	
ARCHITECTURE		

EXTERIOR ENVELOPE CONCEPT

A-504

FLIGHT PROJECTS BUILDING

NATIONAL AERONAUTICS AND SPACE ADMINISTRATION

GODDARD SPACE FLIGHT CENTER GREENBELT, MARYLAND
FACILITIES MANAGEMENT DIVISION

DATE ISSUED	CoF CODE OR WR#	AECOM PROJECT NO.	SCALE
10/12/2012	12GXAZ	60187636	3/4" = 1'-0"

FILE DATE: 10/11/2012 4:09:30 PM

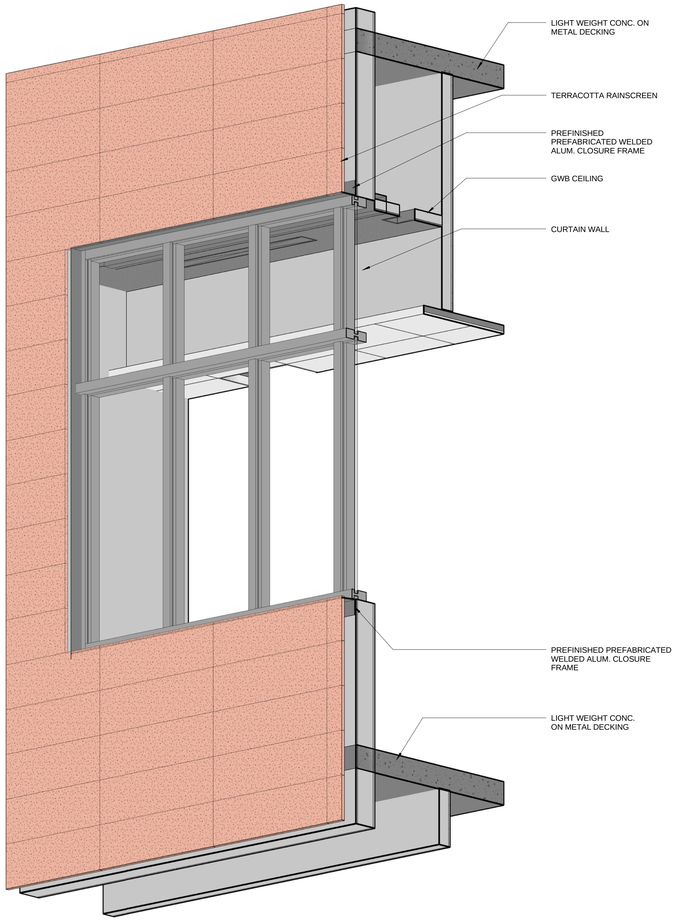

1 VIEW - SOUTH SIDE WINDOW AT TYP. LEVEL

A-505 REF. SCALE:

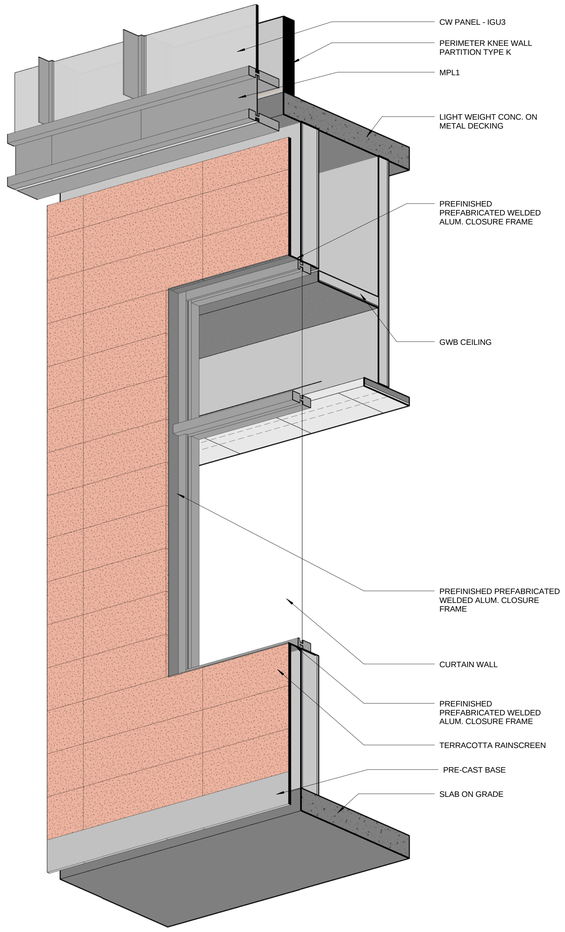

2 VIEW - TYP. WINDOW AT 1ST LEVEL

A-505 REF. SCALE:

100% SUBMITTAL

AECOM

AECOM TECHNICAL SERVICES, INC.
3101 WILSON BOULEVARD
SUITE 900
ARLINGTON, VA 22201

T: 703-682-4900 F: 703.682.4901
www.aecom.com

SEAL AREA

BOARD OF ARCHITECTS 10594 REGISTERED ARCHITECT STATE OF MARYLAND

KEY PLAN

REV	DATE	DESCRIPTION	S&R BR.	CUSTOMER	PM	SECT. HEAD

	INITIALS	DATE
DRAWN BY	LA/NS	
CHECKED BY	BW/MW	
A-E MANAGER	EW	
ENVIRONMENTAL BRANCH	JH	
SAFETY BRANCH	CS	
CM	MMD	
PM	RWP	
CUSTOMER	JWB	
ENG. BRANCH	DGL	

EXTERIOR ENVELOPE CONCEPT

A-505

FLIGHT PROJECTS BUILDING

NATIONAL AERONAUTICS AND SPACE ADMINISTRATION

GODDARD SPACE FLIGHT CENTER GREENBELT, MARYLAND
FACILITIES MANAGEMENT DIVISION

DATE ISSUED	CoF CODE OR WR#	AECOM PROJECT NO.	SCALE
10/12/2012	12GXAZ	60187636	

FILE DATE: 10/11/2012 4:10:06 PM

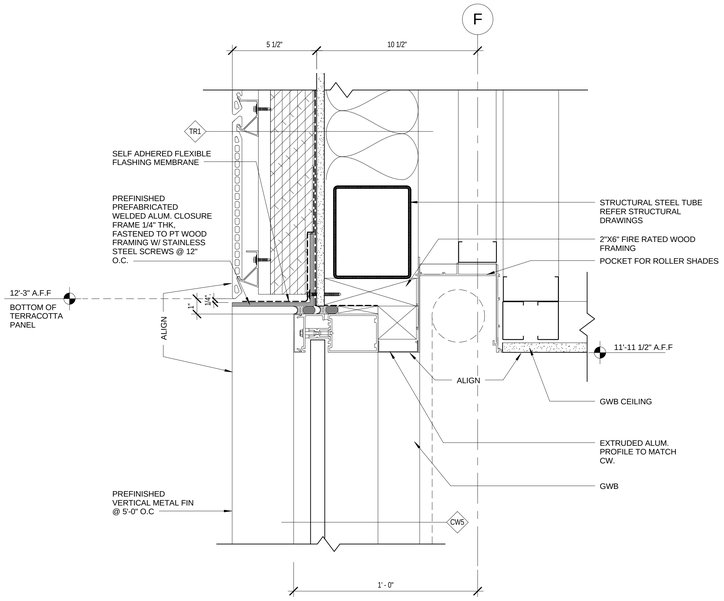

9 TYP. TERRACOTTA

A-506 REF. A-504 SCALE: 3" = 1'-0"

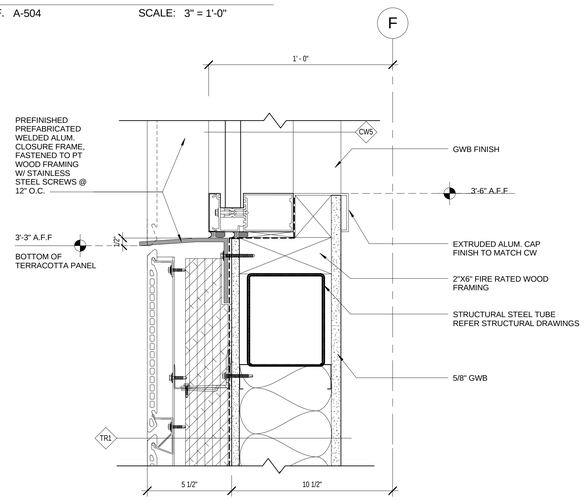

8 TYP. TERRACOTTA - WINDOW - SILL DETAIL

A-506 REF. A-504 SCALE: 3" = 1'-0"

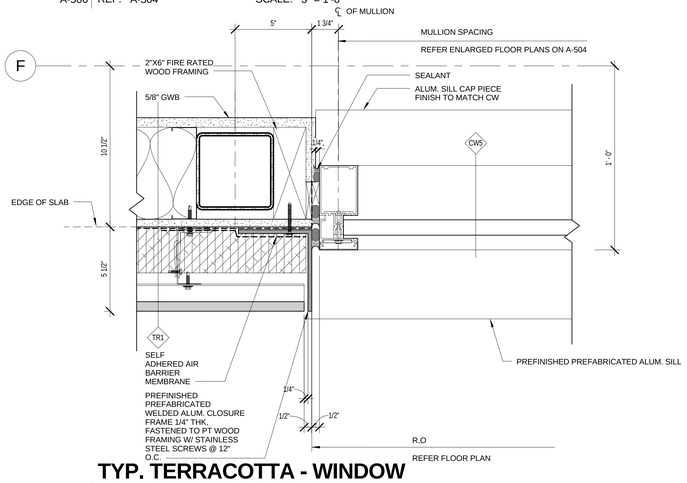

7 TYP. TERRACOTTA - WINDOW JAMB DETAIL

A-506 REF. A-413 SCALE: 3" = 1'-0"

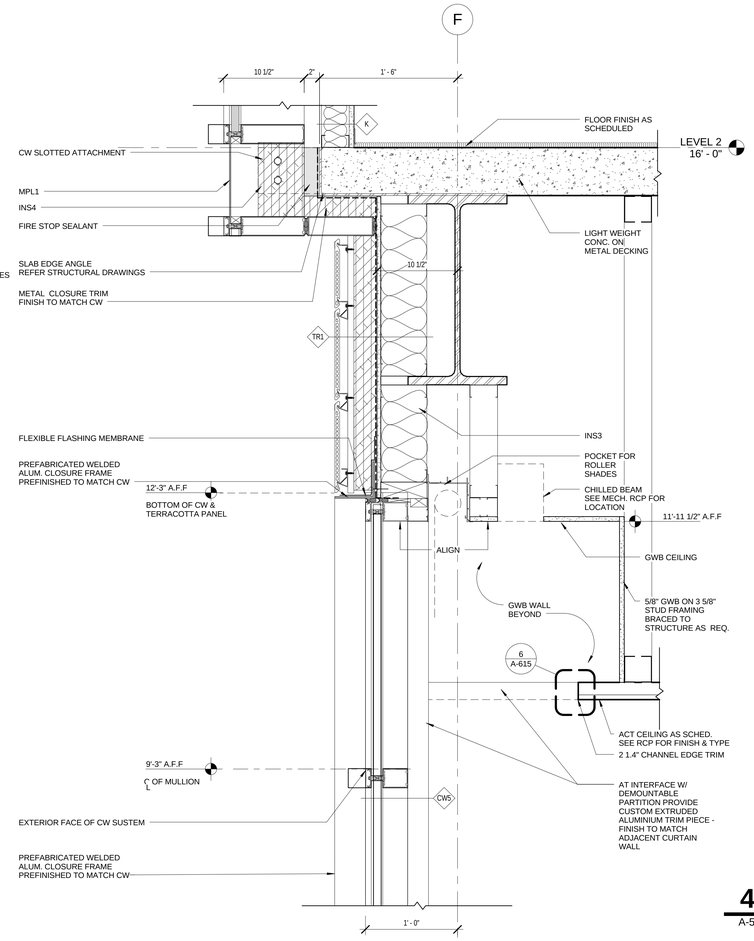

6 SECTION DETAIL

A-506 REF. A-413 SCALE: 1 1/2" = 1'-0"

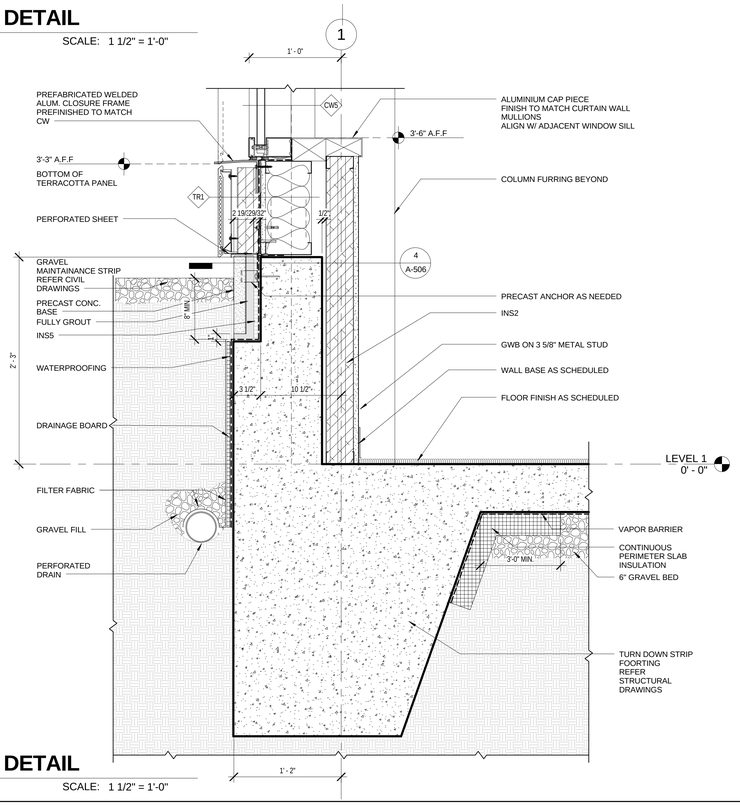

5 SECTION DETAIL

A-506 REF. A-211 SCALE: 1 1/2" = 1'-0"

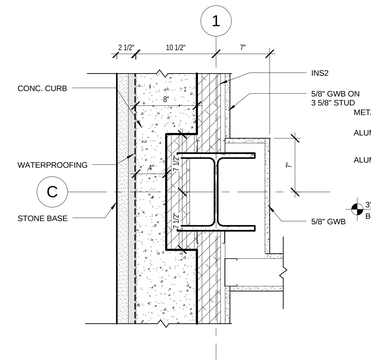

4 PLAN DETAIL

A-506 REF. A-506 SCALE: 1 1/2" = 1'-0"

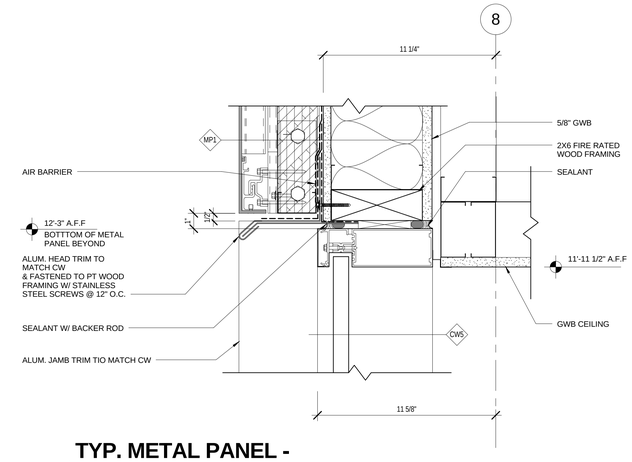

3 TYP. METAL PANEL - WINDOW - HEAD DETAIL

A-506 REF. A-403 SCALE: 3" = 1'-0"

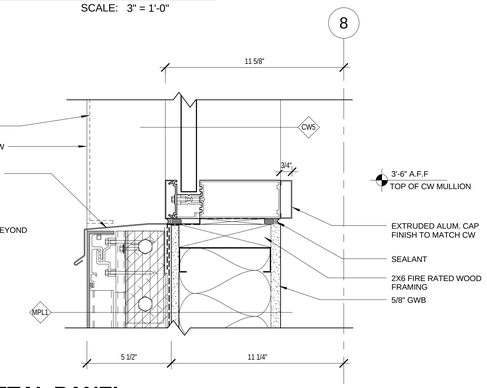

2 TYP. METAL PANEL - WINDOW - SILL DETAIL

A-506 REF. A-403 SCALE: 3" = 1'-0"

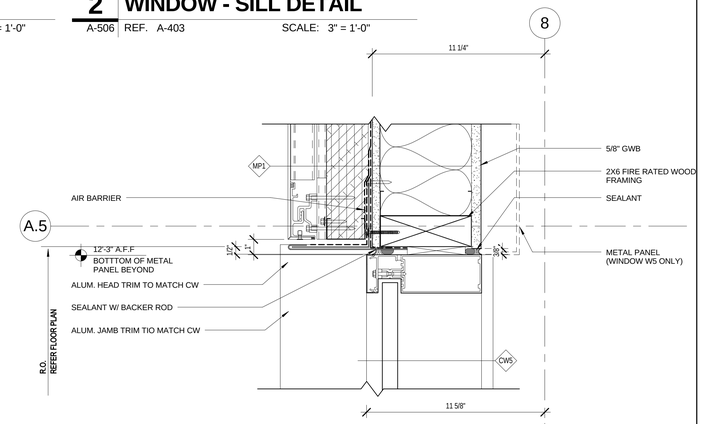

1 TYP. METAL PANEL - WINDOW - JAMB DETAIL

A-506 REF. A-102b SCALE: 3" = 1'-0"

100% SUBMITTAL

AECOM

AECOM TECHNICAL SERVICES, INC.
3101 WILSON BOULEVARD
SUITE 900
ARLINGTON, VA 22201

T: 703-682-4900 F: 703.682.4901
www.aecom.com

SEAL AREA

BOARD OF ARCHITECTS 10084 REGISTERED PROFESSIONAL ARCHITECT STATE OF MARYLAND

KEY PLAN

REV	DATE	DESCRIPTION	S&B BR.	CUSTOMER	PM	SECT. HEAD

	INITIALS	DATE
DRAWN BY	LA/NS	
CHECKED BY	BW/MW	
A-E MANAGER	EW	
ENVIRONMENTAL BRANCH	JH	
SAFETY BRANCH	CS	
CM	MMD	
PM	RWP	
CUSTOMER	JWB	
ENG. BRANCH	DGL	

EXTERIOR ENCLOSURE CONCEPT

A-506

FLIGHT PROJECTS BUILDING

NATIONAL AERONAUTICS AND SPACE ADMINISTRATION
GODDARD SPACE FLIGHT CENTER GREENBELT, MARYLAND
FACILITIES MANAGEMENT DIVISION

DATE ISSUED	C/F CODE OR WR#	AECOM PROJECT NO.	SCALE
10/12/2012	12GXAZ	60187636	As indicated

FILE DATE: 10/11/2012 4:10:29 PM

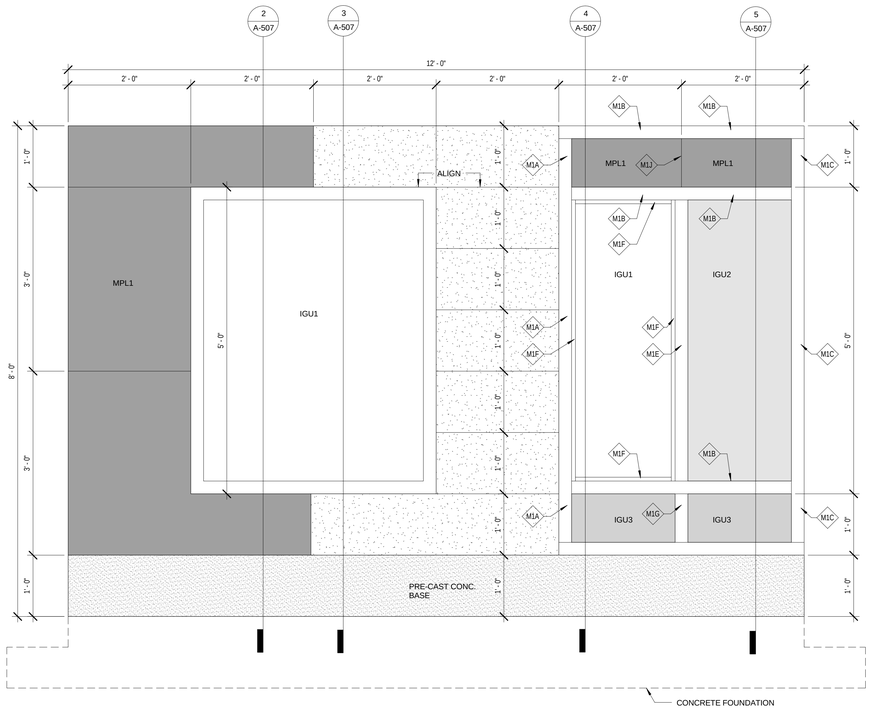

1 PLAN AND ELEVATION FOR MOCK-UP

A-507 REF. SCALE: 1" = 1'-0"

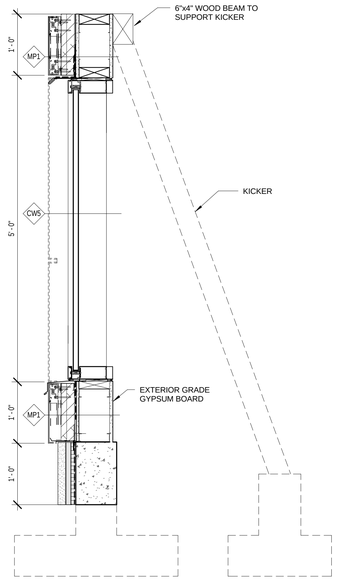

2 Section of MOCK-UP @ Metal Panel

A-507 REF. A-507 SCALE: 1" = 1'-0"

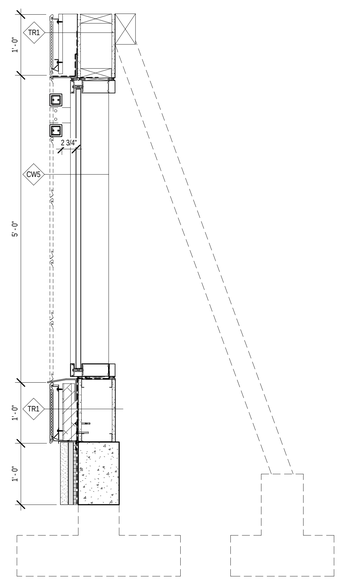

3 Section of MOCK-UP @ Terracotta Rainscreen

A-507 REF. A-507 SCALE: 1" = 1'-0"

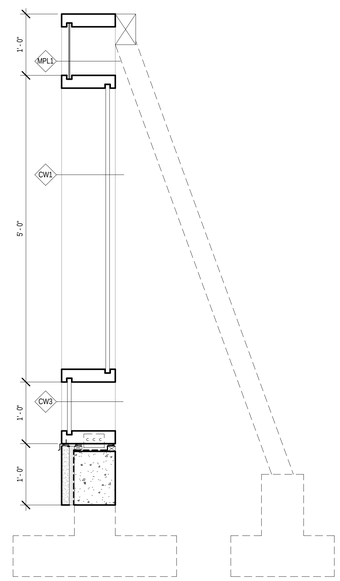

4 Section of MOCK-UP @ Clear Glass

A-507 REF. A-507 SCALE: 1" = 1'-0"

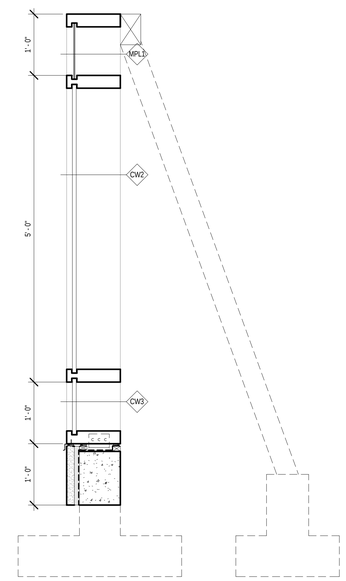

5 Section of MOCK-UP @ Translucent Glass

A-507 REF. A-507 SCALE: 1" = 1'-0"

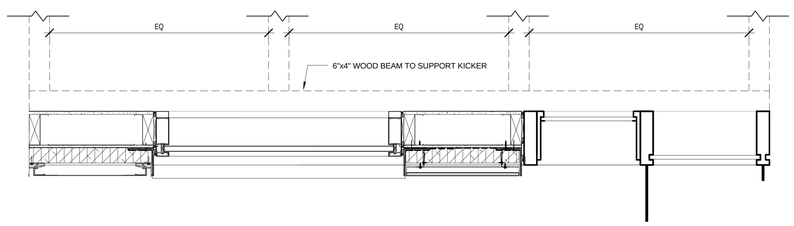

6 PLAN OF MOCK-UP

A-507 REF. SCALE: 1" = 1'-0"

100% SUBMITTAL

AECOM
AECOM TECHNICAL SERVICES, INC.
3101 WILSON BOULEVARD
SUITE 900
ARLINGTON, VA 22201

T: 703-682-4900 F: 703.682.4901
www.aecom.com

SEAL AREA

BOARD OF ARCHITECTS 10164 EDWARD J. WEBER STATE OF MARYLAND

KEY PLAN

REV	DATE	DESCRIPTION	S&R BR.	CUSTOMER	PM	SECT. HEAD

	INITIALS	DATE
DRAWN BY	LA/NS	
CHECKED BY	BW/MW	
A-E MANAGER	EW	
ENVIRONMENTAL BRANCH	JH	
SAFETY BRANCH	CS	
CM	MMD	
PM	RWP	
CUSTOMER	JWB	
ENG. BRANCH	DGL	

DETAIL DRAWINGS FOR MOCK-UP OF EXTERIOR MATERIAL

A-507

FLIGHT PROJECTS BUILDING

NATIONAL AERONAUTICS AND SPACE ADMINISTRATION
GODDARD SPACE FLIGHT CENTER GREENBELT, MARYLAND
FACILITIES MANAGEMENT DIVISION

DATE ISSUED	CoF CODE OR WR#	AECOM PROJECT NO.	SCALE
10/12/2012	12GXAZ	60187636	1" = 1'-0"

FILE DATE: 10/11/2012 4:10:39 PM

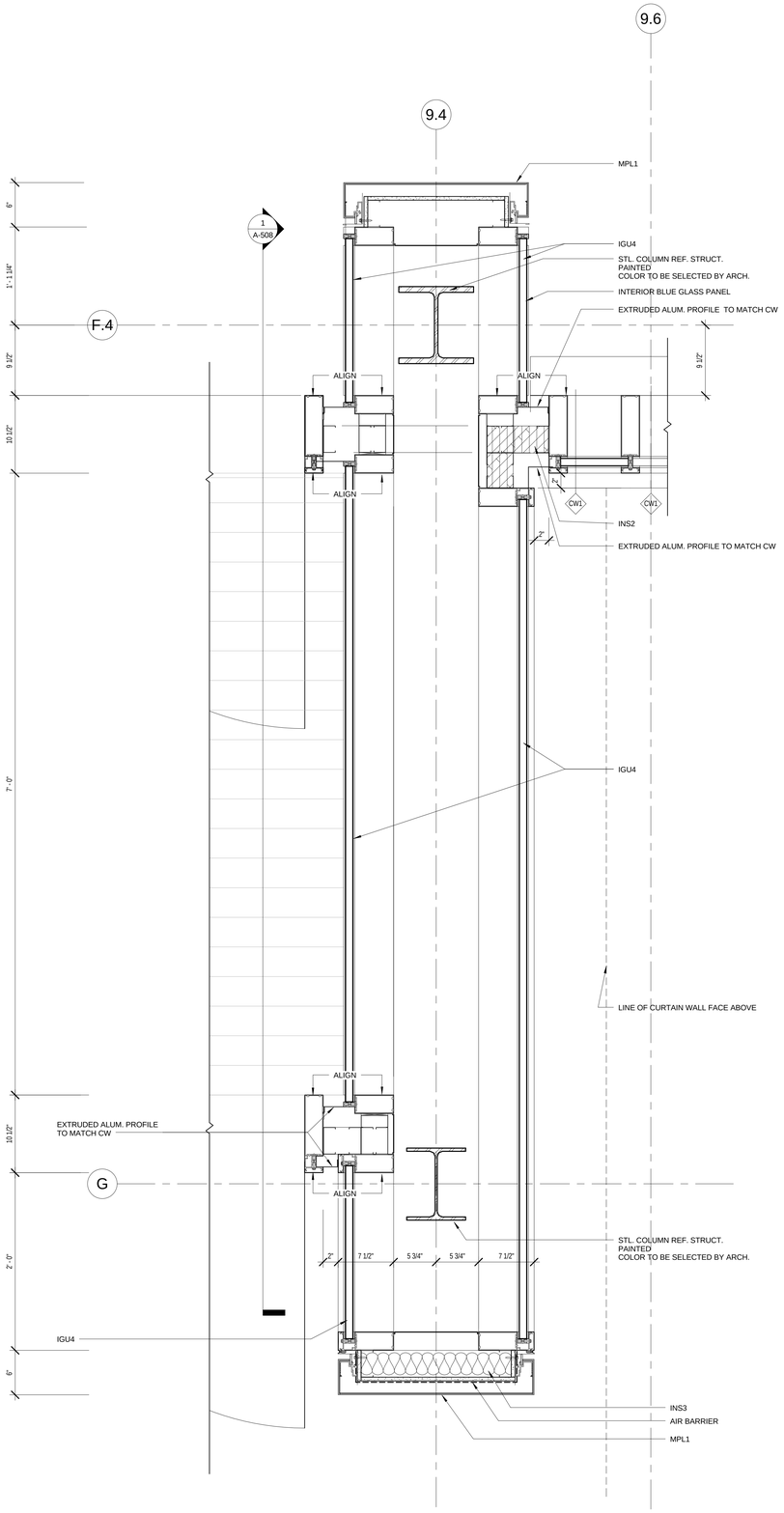

2 PLAN DETAIL

A-508 | REF. A-101b SCALE: 1 1/2" = 1'-0"

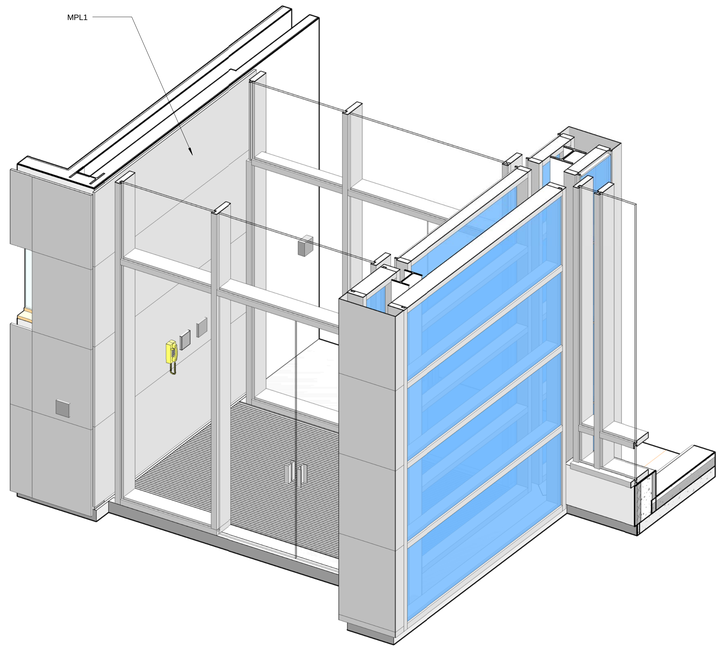

3 3D VIEW - BLUE WALL

A-508 | REF. SCALE:

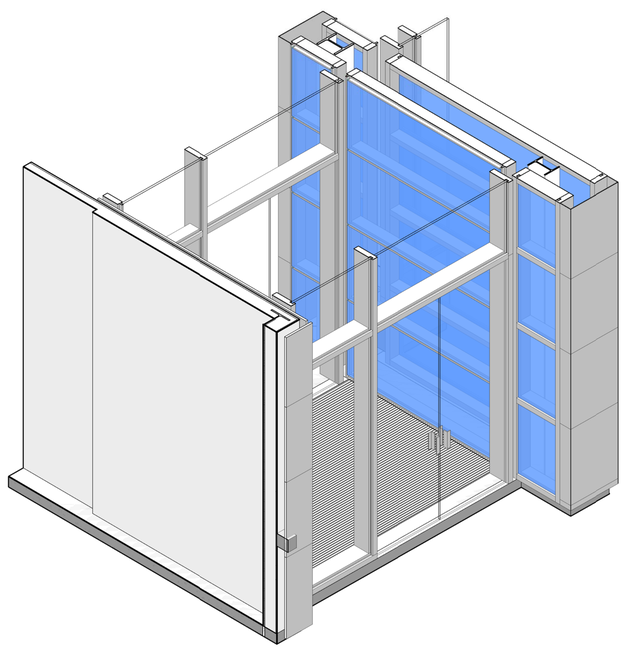

4 3D VIEW - BLUE WALL

A-508 | REF. SCALE:

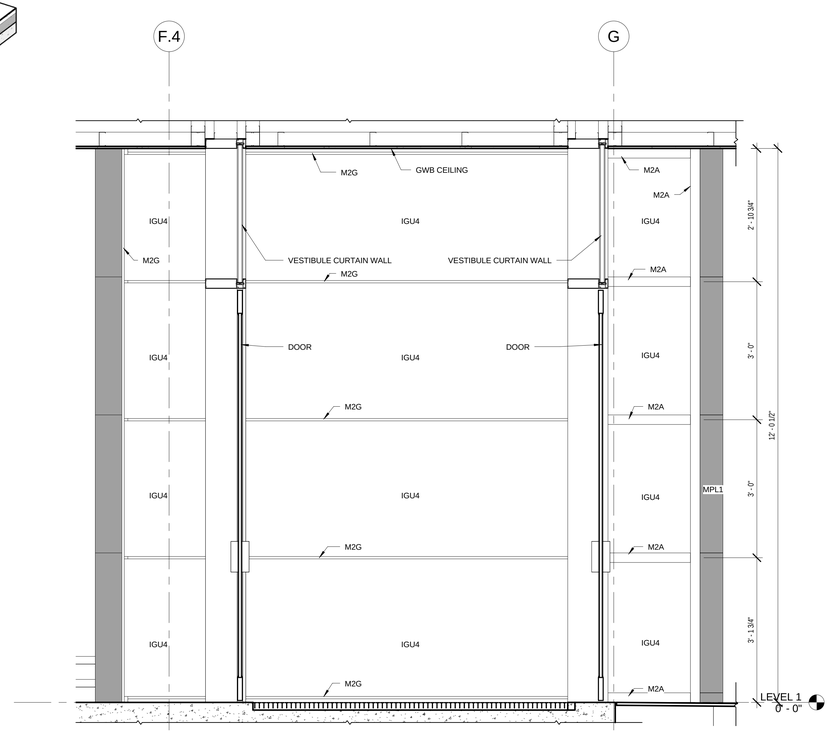

1 BLUE WALL - INTERIOR ELEVATION

A-508 | REF. A-508 SCALE: 3/4" = 1'-0"

100% SUBMITTAL

AECOM

AECOM TECHNICAL SERVICES, INC.
3101 WILSON BOULEVARD
SUITE 900
ARLINGTON, VA 22201

T: 703-682-4900 F: 703.682.4901
www.aecom.com

SEAL AREA

BOARD OF ARCHITECTS
ERIC WOOD
10004
REGISTERED
STATE OF MARYLAND

KEY PLAN

REV	DATE	DESCRIPTION	S&R BR.	CUSTOMER	PM	SECT. HEAD

	INITIALS	DATE
DRAWN BY	LA/NS	
CHECKED BY	BW/MW	
A-E MANAGER	EW	
ENVIRONMENTAL BRANCH	JH	
SAFETY BRANCH	CS	
CM	MMD	
PM	RWP	
CUSTOMER	JWB	
ENG. BRANCH	DGL	

EXTERIOR WALL CONCEPTS - BLUE WALL

A-508

FLIGHT PROJECTS BUILDING

NATIONAL AERONAUTICS AND SPACE ADMINISTRATION

GODDARD SPACE FLIGHT CENTER GREENBELT, MARYLAND
FACILITIES MANAGEMENT DIVISION

DATE ISSUED	CoF CODE OR WR#	AECOM PROJECT NO.	SCALE
10/12/2012	12GXAZ	60187636	As indicated

FILE DATE: 10/11/2012 4:10:56 PM

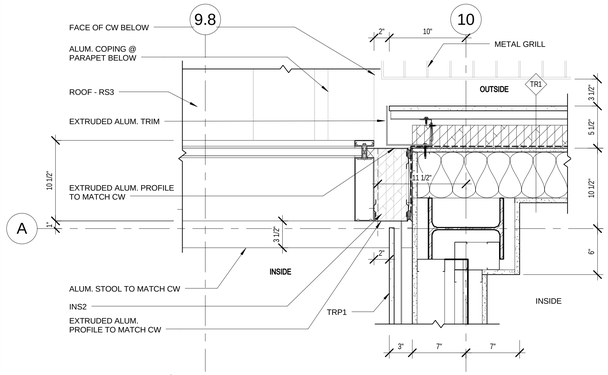

10 PLAN DETAIL
A-601 REF. A-103b SCALE: 1 1/2" = 1'-0"

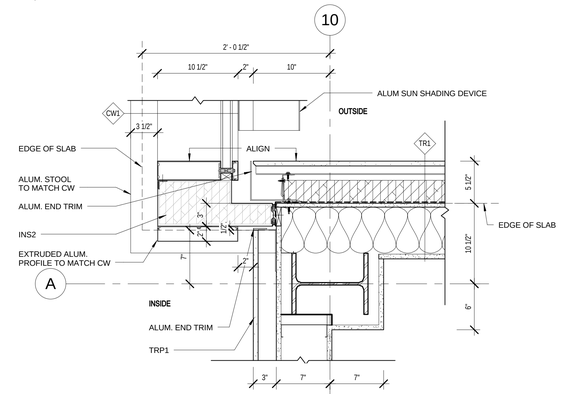

9 PLAN DETAIL
A-601 REF. A-102b SCALE: 1 1/2" = 1'-0"

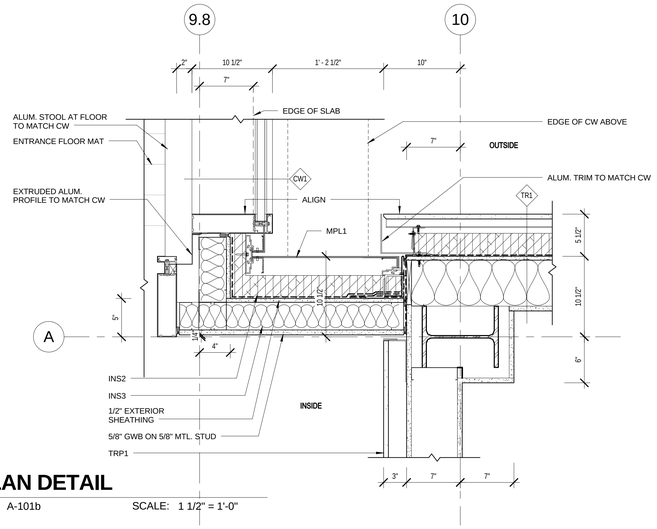

7 PLAN DETAIL
A-601 REF. A-101b SCALE: 1 1/2" = 1'-0"

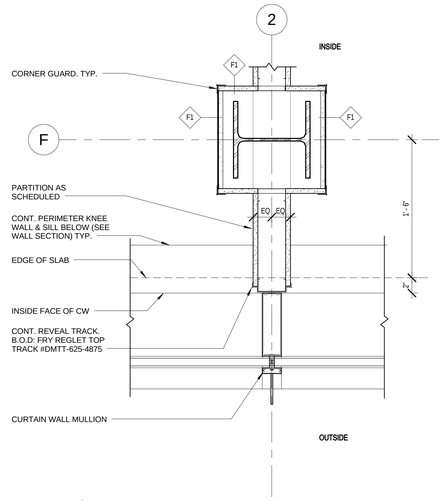

3 PLAN DETAIL
A-601 REF. A-102a SCALE: 1 1/2" = 1'-0"

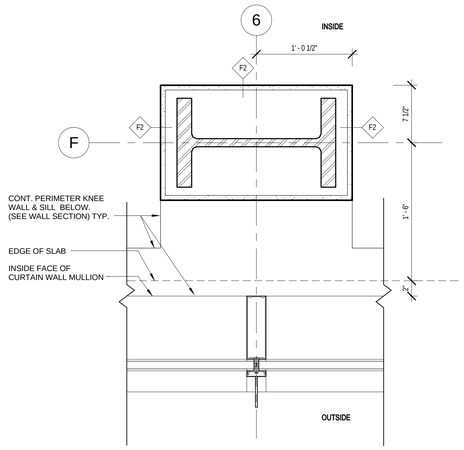

2 PLAN DETAIL
A-601 REF. A-102a SCALE: 1 1/2" = 1'-0"

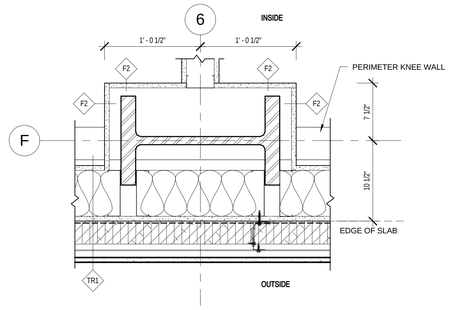

1 PLAN DETAIL
A-601 REF. A-101a SCALE: 1 1/2" = 1'-0"

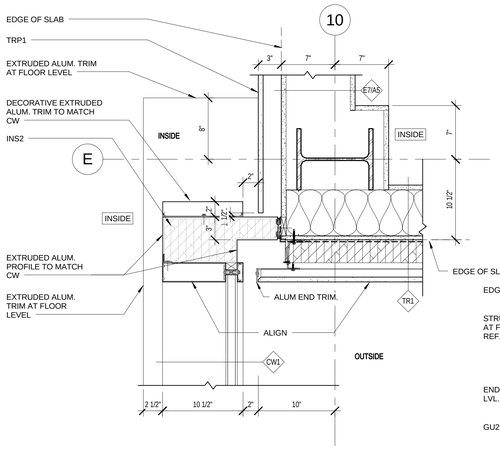

8 PLAN DETAIL
A-601 REF. A-102b SCALE: 1 1/2" = 1'-0"

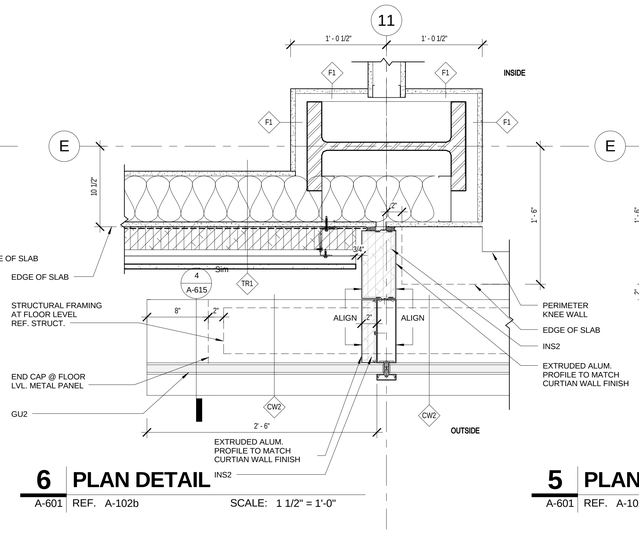

6 PLAN DETAIL
A-601 REF. A-102b SCALE: 1 1/2" = 1'-0"

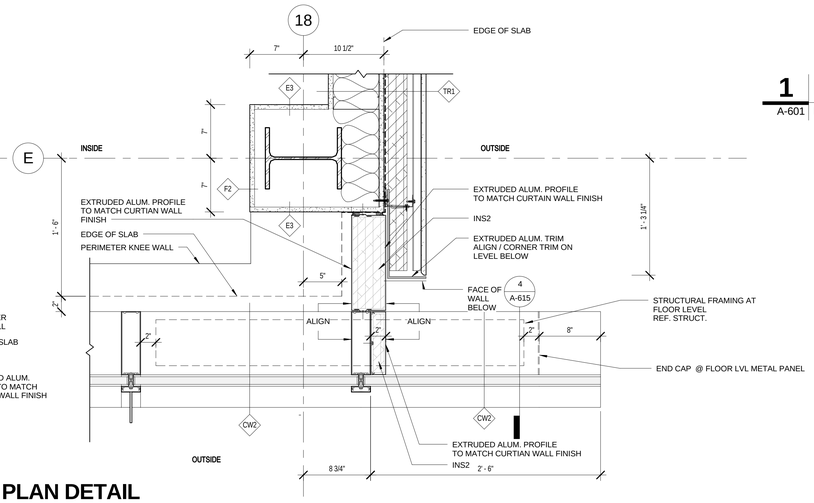

5 PLAN DETAIL
A-601 REF. A-102b SCALE: 1 1/2" = 1'-0"

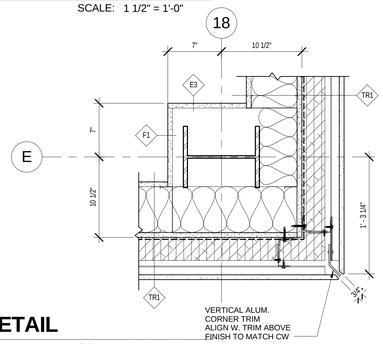

4 PLAN DETAIL
A-601 REF. A-101a SCALE: 1 1/2" = 1'-0"

100% SUBMITTAL

AECOM

AECOM TECHNICAL SERVICES, INC.
3101 WILSON BOULEVARD
SUITE 900
ARLINGTON, VA 22201

T: 703-682-4900 F: 703.682.4901
www.aecom.com

SEAL AREA

KEY PLAN

REV	DATE	DESCRIPTION	S&R BR.	CUSTOMER	PM	SECT. HEAD

	INITIALS	DATE
DRAWN BY	LA/NS	
CHECKED BY	BW/MW	
A-E MANAGER	EW	
ENVIRONMENTAL BRANCH	JH	
SAFETY BRANCH	CS	
CM	MMD	
PM	RWP	
CUSTOMER	JWB	
ENG. BRANCH	DGL	

PLAN DETAILS

A-601

FLIGHT PROJECTS BUILDING

NATIONAL AERONAUTICS AND SPACE ADMINISTRATION
GODDARD SPACE FLIGHT CENTER GREENBELT, MARYLAND
FACILITIES MANAGEMENT DIVISION

ARCHITECTURE	DATE ISSUED	CoF CODE OR WR#	AECOM PROJECT NO.	SCALE
	10/12/2012	12GXAZ	60187636	1 1/2" = 1'-0"

FILE DATE: 10/11/2012 4:11:43 PM

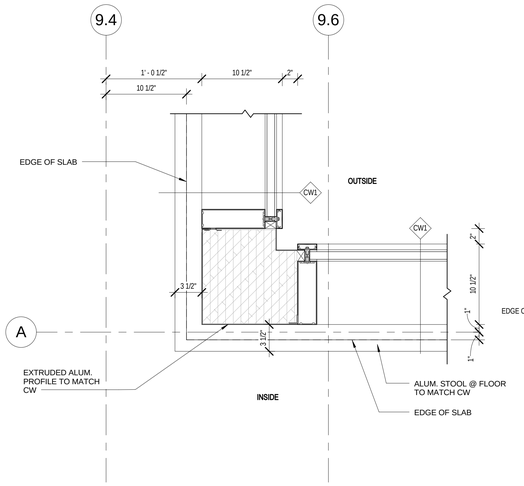

10 PLAN DETAIL

A-602 REF. A-104b SCALE: 1 1/2" = 1'-0"

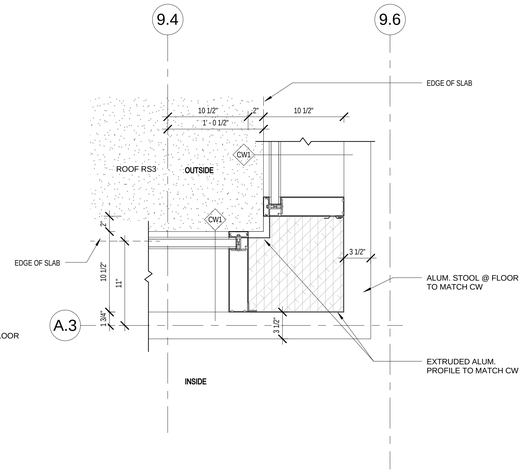

8 PLAN DETAIL

A-602 REF. A-103b SCALE: 1 1/2" = 1'-0"

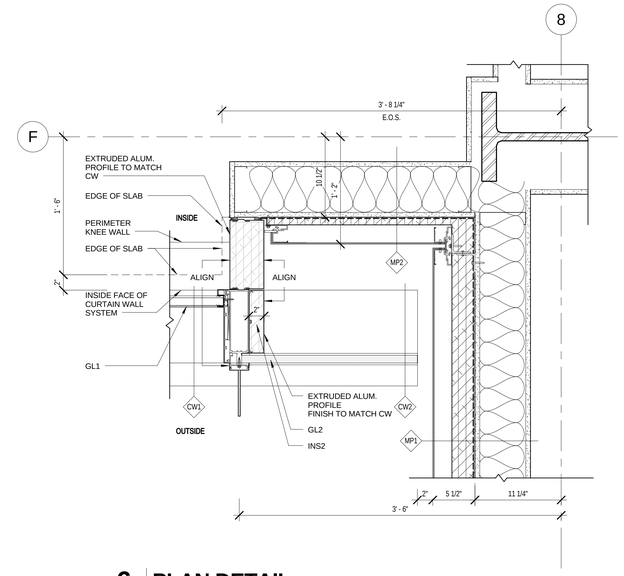

6 PLAN DETAIL

A-602 REF. A-102b SCALE: 1 1/2" = 1'-0"

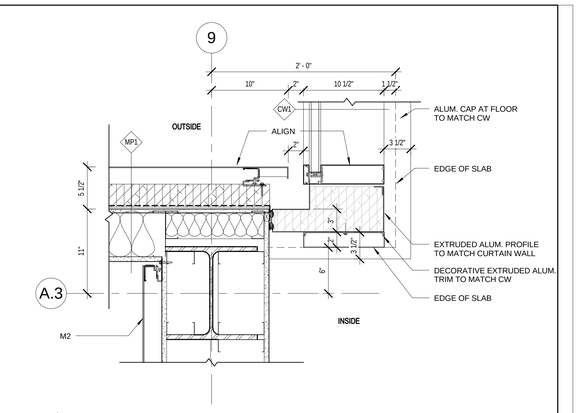

3 PLAN DETAIL

A-602 REF. A-104b SCALE: 1 1/2" = 1'-0"

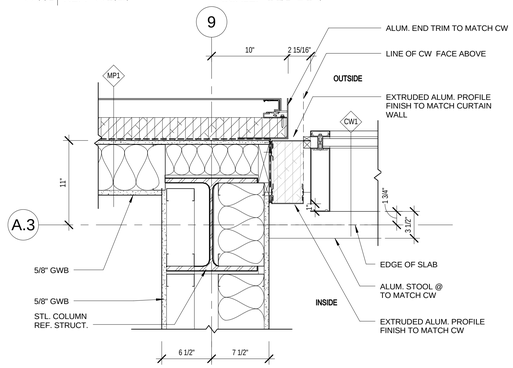

2 PLAN DETAIL

A-602 REF. A-103b SCALE: 1 1/2" = 1'-0"

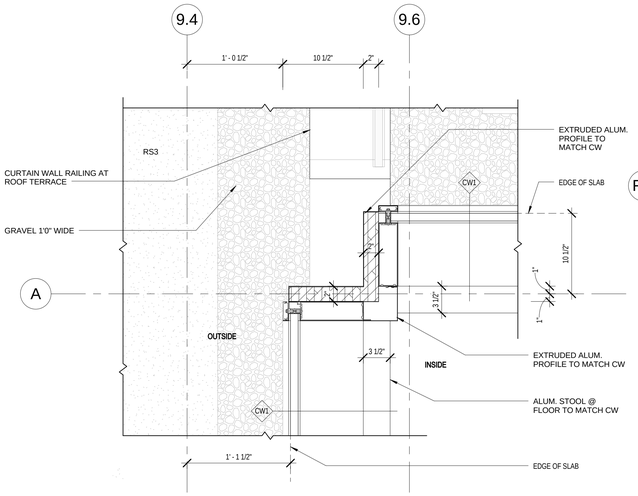

9 PLAN DETAIL

A-602 REF. A-103b SCALE: 1 1/2" = 1'-0"

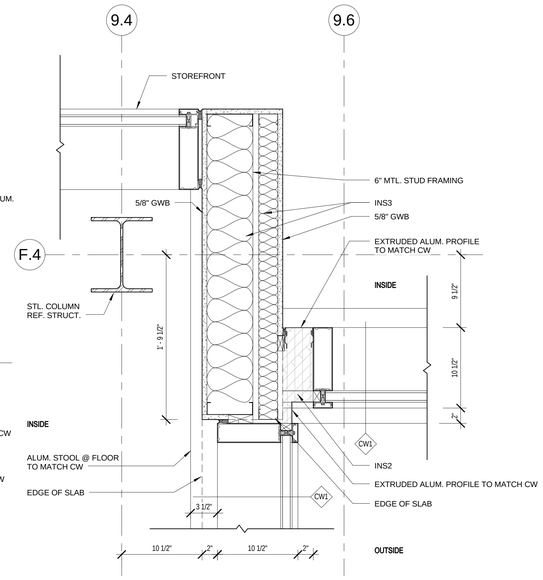

7 PLAN DETAIL

A-602 REF. A-104b SCALE: 1 1/2" = 1'-0"

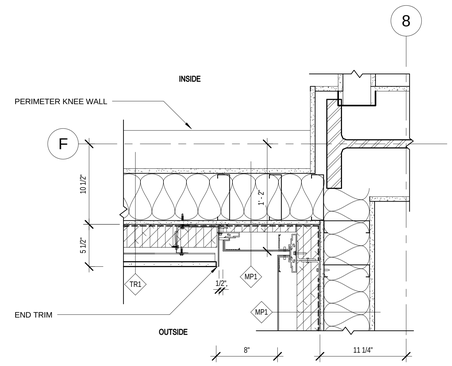

5 PLAN DETAIL

A-602 REF. A-101b SCALE: 1 1/2" = 1'-0"

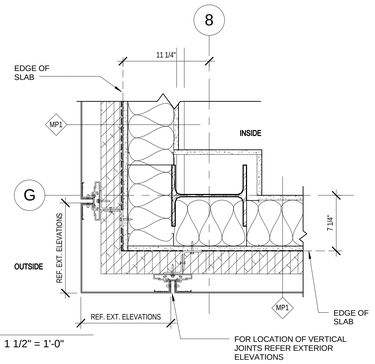

4 PLAN DETAIL

A-602 REF. A-102b SCALE: 1 1/2" = 1'-0"

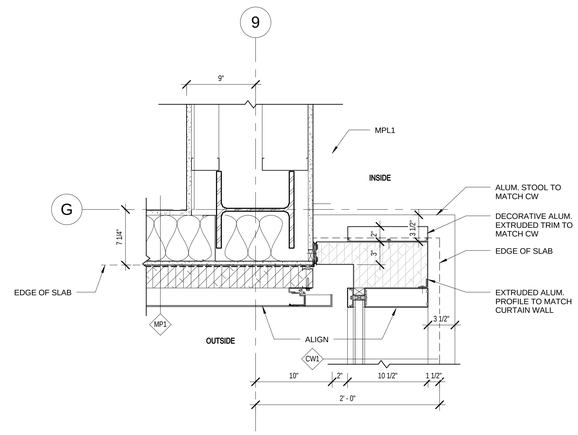

1 PLAN DETAIL

A-602 REF. A-102b SCALE: 1 1/2" = 1'-0"

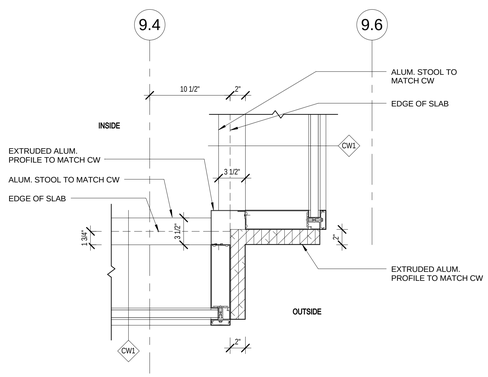

11 PLAN DETAIL

A-602 REF. A-102b SCALE: 1 1/2" = 1'-0"

100% SUBMITTAL

AECOM

AECOM TECHNICAL SERVICES, INC.
3101 WILSON BOULEVARD
SUITE 900
ARLINGTON, VA 22201

T: 703-682-4900 F: 703.682.4901
www.aecom.com

SEAL AREA

KEY PLAN

REV	DATE	DESCRIPTION	S&R BR.	CUSTOMER	PM	SECT. HEAD

	INITIALS	DATE
DRAWN BY	LA/NS	
CHECKED BY	BW/MW	
A-E MANAGER	EW	
ENVIRONMENTAL BRANCH	JH	
SAFETY BRANCH	CS	
CM	MMD	
PM	RWP	
CUSTOMER	JWB	
ENG. BRANCH	DGL	
ARCHITECTURE		

PLAN DETAILS

A-602

FLIGHT PROJECTS BUILDING

NATIONAL AERONAUTICS AND SPACE ADMINISTRATION

GODDARD SPACE FLIGHT CENTER GREENBELT, MARYLAND
FACILITIES MANAGEMENT DIVISION

DATE ISSUED	CoF CODE OR WR#	AECOM PROJECT NO.	SCALE
10/12/2012	12GXAZ	60187636	1 1/2" = 1'-0"

FILE DATE: 10/11/2012 4:11:53 PM

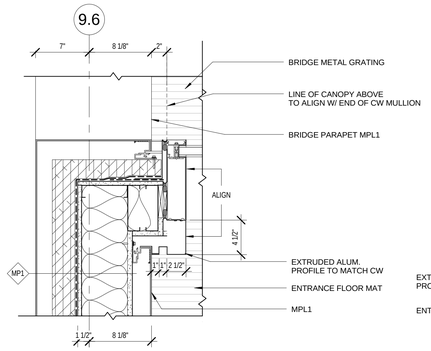

11 PLAN DETAIL

A-603 REF. A-102b SCALE: 1 1/2" = 1'-0"

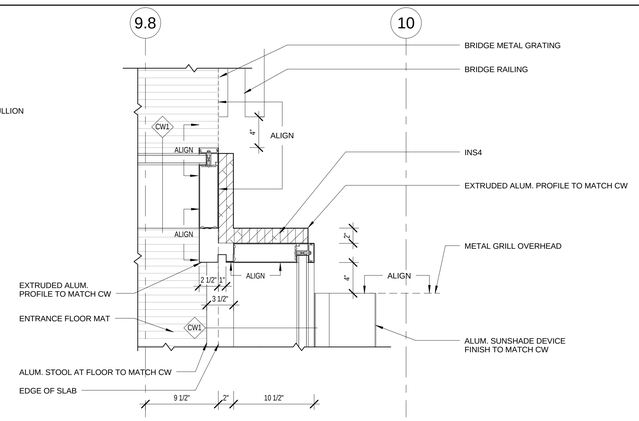

10 PLAN DETAIL

A-603 REF. A-102b SCALE: 1 1/2" = 1'-0"

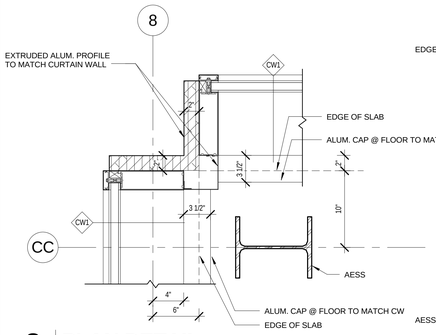

8 PLAN DETAIL

A-603 REF. A-102b SCALE: 1 1/2" = 1'-0"

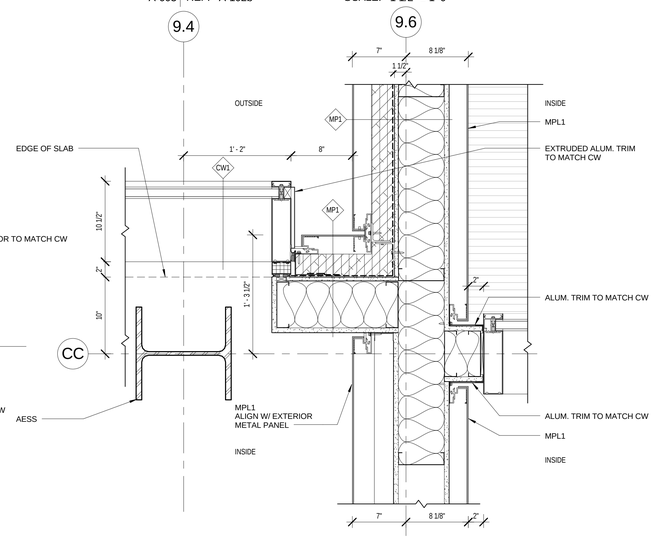

6 PLAN DETAIL

A-603 REF. A-102b SCALE: 1 1/2" = 1'-0"

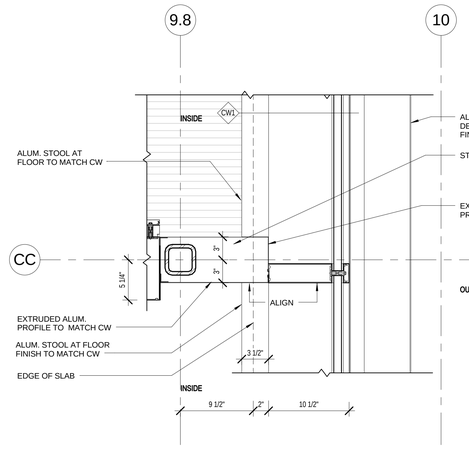

9 PLAN DETAIL

A-603 REF. A-102b SCALE: 1 1/2" = 1'-0"

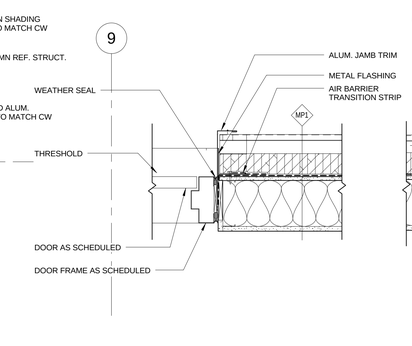

3 PLAN DETAIL

A-603 REF. A-101b SCALE: 1 1/2" = 1'-0"

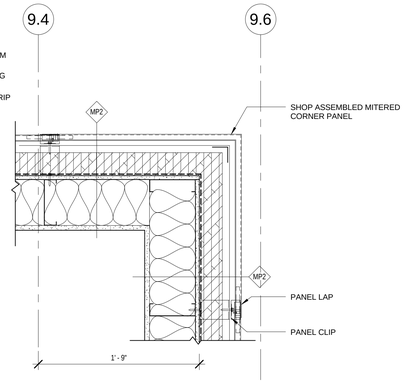

2 PLAN DETAIL

A-603 REF. A-101b SCALE: 1 1/2" = 1'-0"

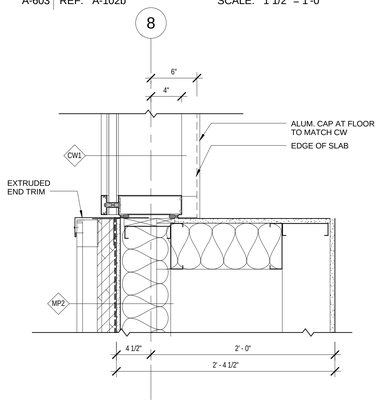

7 PLAN DETAIL

A-603 REF. A-102b SCALE: 1 1/2" = 1'-0"

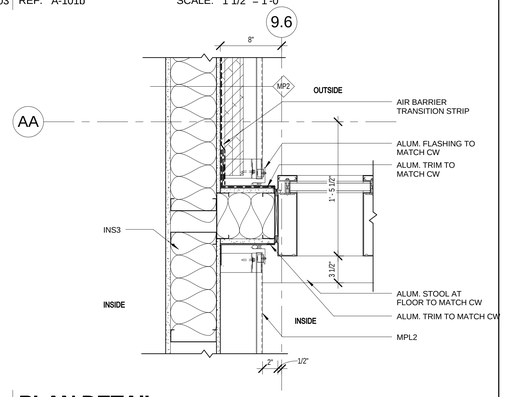

1 PLAN DETAIL

A-603 REF. A-101b SCALE: 1 1/2" = 1'-0"

100% SUBMITTAL

AECOM

AECOM TECHNICAL SERVICES, INC.
3101 WILSON BOULEVARD
SUITE 900
ARLINGTON, VA 22201

T: 703-682-4900 F: 703.682.4901
www.aecom.com

SEAL AREA

BOARD OF ARCHITECTS
ERIC W. WEISS
100884
REGISTERED ARCHITECT
STATE OF MARYLAND

KEY PLAN

REV	DATE	DESCRIPTION	S&R BR.	CUSTOMER	PM	SECT. HEAD

	INITIALS	DATE
DRAWN BY	LA/NS	
CHECKED BY	BW/MW	
A-E MANAGER	EW	
ENVIRONMENTAL BRANCH	JH	
SAFETY BRANCH	CS	
CM	MMD	
PM	RWP	
CUSTOMER	JWB	
ENG. BRANCH	DGL	

PLAN DETAILS

A-603

FLIGHT PROJECTS BUILDING

NATIONAL AERONAUTICS AND SPACE ADMINISTRATION

GODDARD SPACE FLIGHT CENTER GREENBELT, MARYLAND
FACILITIES MANAGEMENT DIVISION

DATE ISSUED	CoF CODE OR WR#	AECOM PROJECT NO.	SCALE
10/12/2012	12GXAZ	60187636	1 1/2" = 1'-0"

FILE DATE: 10/11/2012 4:12:10 PM

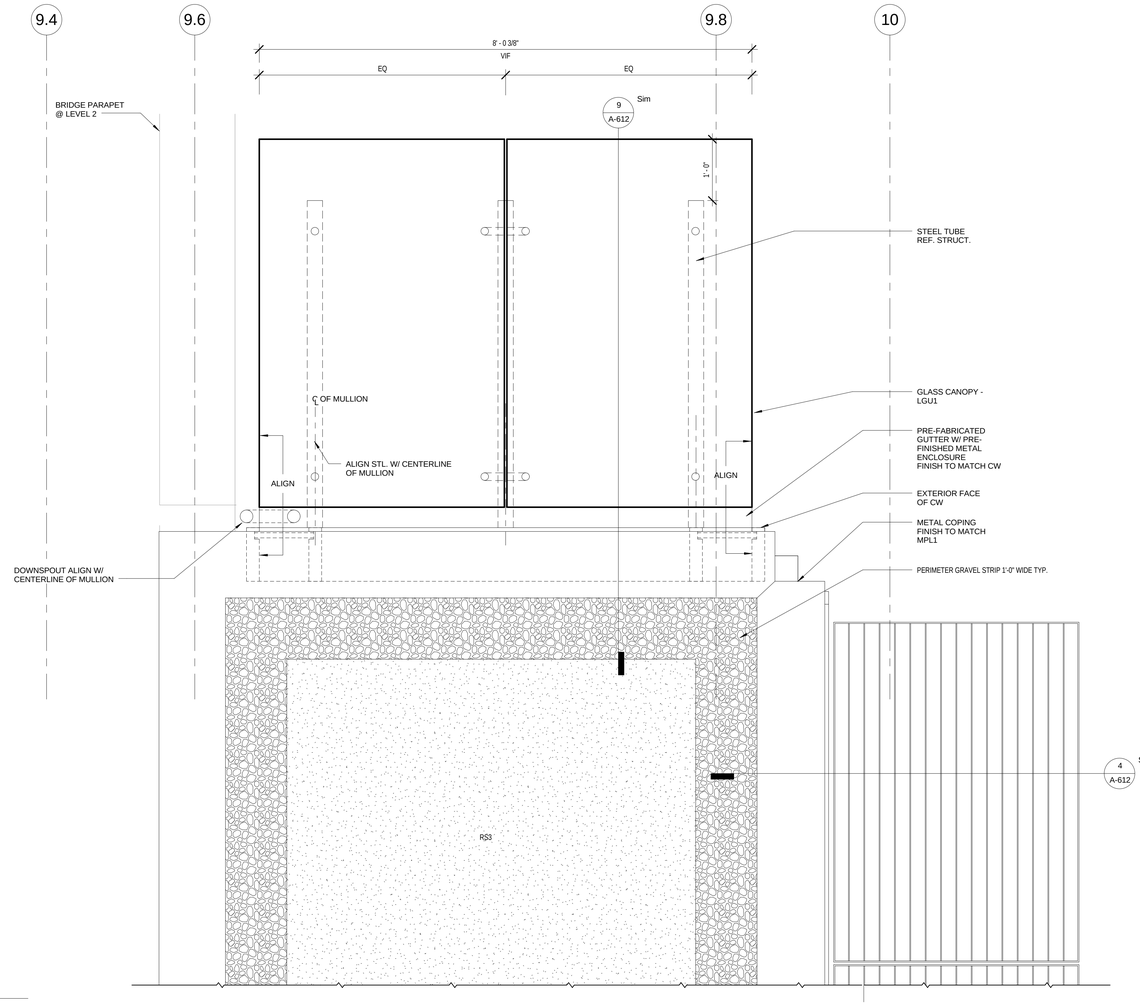

2 PLAN DETAIL

A-604 REF. A-103b SCALE: 1" = 1'-0"

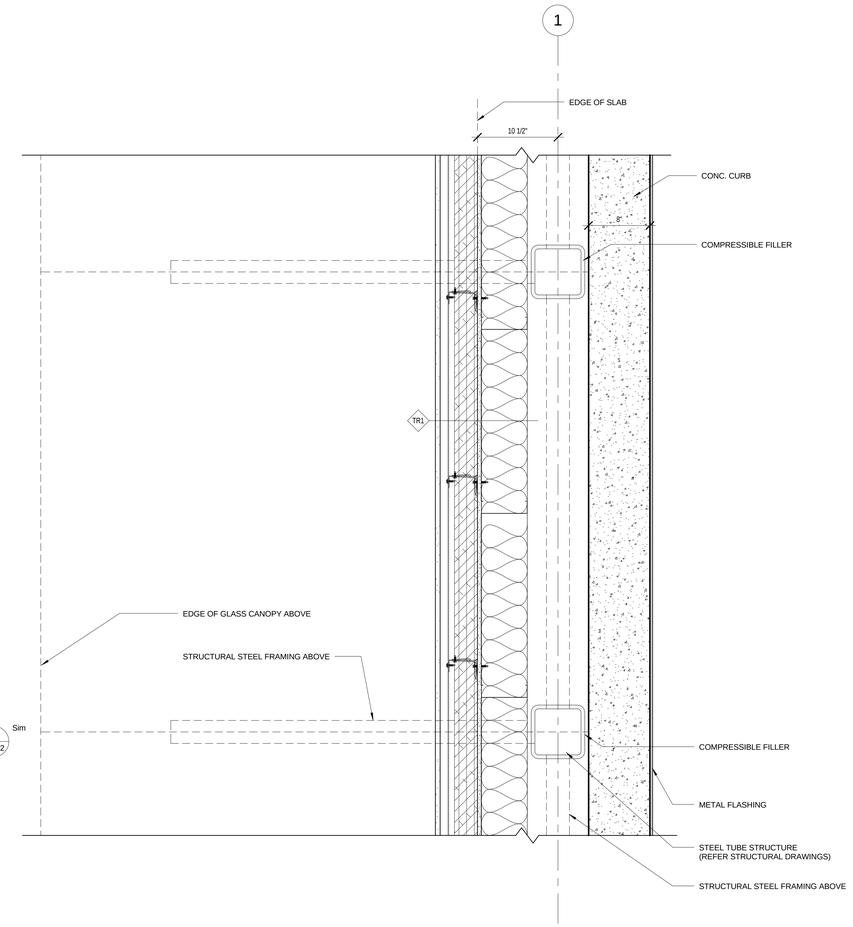

3 PLAN DETAIL

A-604 REF. SCALE: 1 1/2" = 1'-0"

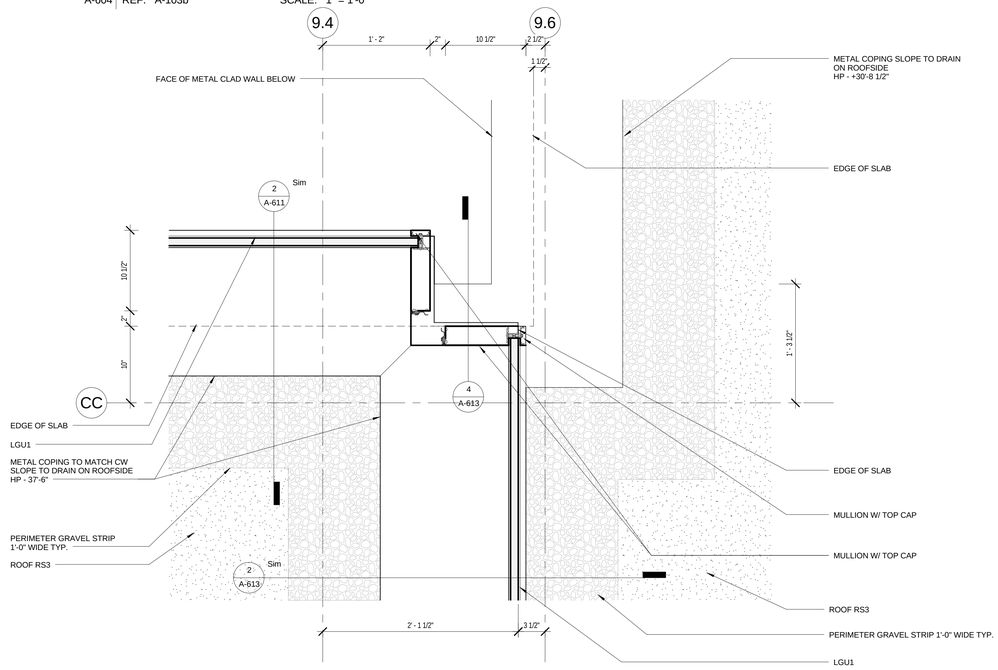

1 PLAN DETAIL

A-604 REF. A-103b SCALE: 1 1/2" = 1'-0"

100% SUBMITTAL

AECOM

AECOM TECHNICAL SERVICES, INC.
3101 WILSON BOULEVARD
SUITE 900
ARLINGTON, VA 22201

T: 703-682-4900 F: 703.682.4901
www.aecom.com

SEAL AREA

BOARD OF ARCHITECTS
ERIC WILSON
10004
STATE OF MARYLAND

KEY PLAN

REV	DATE	DESCRIPTION	S&R BR.	CUSTOMER	PM	SECT. HEAD

	INITIALS	DATE
DRAWN BY	LA/NS	
CHECKED BY	BW/MW	
A-E MANAGER	EW	
ENVIRONMENTAL BRANCH	JH	
SAFETY BRANCH	CS	
CM	MMD	
PM	RWP	
CUSTOMER	JWB	
ENG. BRANCH	DGL	

PLAN DETAILS

A-604

FLIGHT PROJECTS BUILDING

NATIONAL AERONAUTICS AND SPACE ADMINISTRATION

GODDARD SPACE FLIGHT CENTER GREENBELT, MARYLAND
FACILITIES MANAGEMENT DIVISION

DATE ISSUED	CoF CODE OR WR#	AECOM PROJECT NO.	SCALE
10/12/2012	12GXAZ	60187636	As indicated

FILE DATE: 10/11/2012 4:12:22 PM

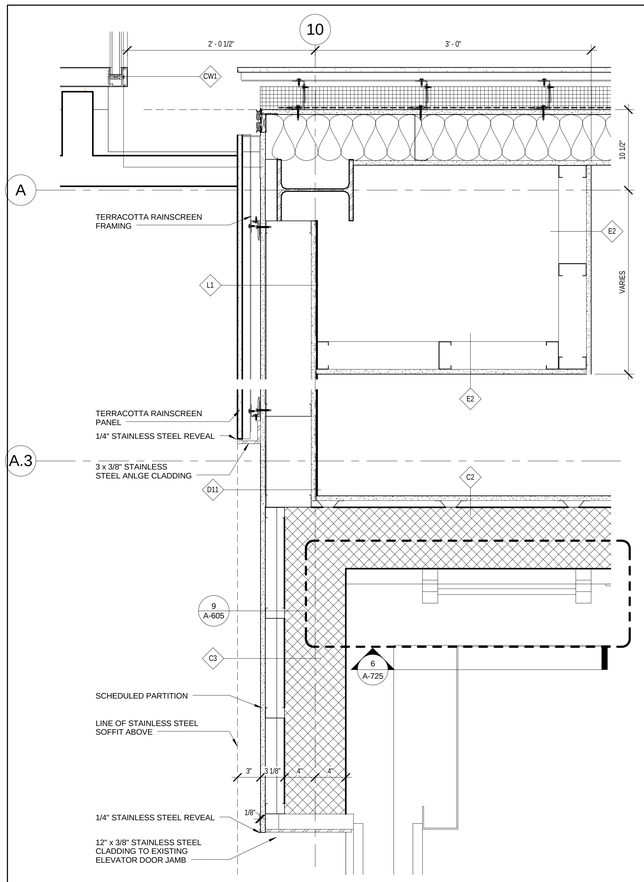

11 ELEVATOR DETAIL - EXTERIOR CORNER

A-605 REF. A-101b SCALE: 1 1/2" = 1'-0"

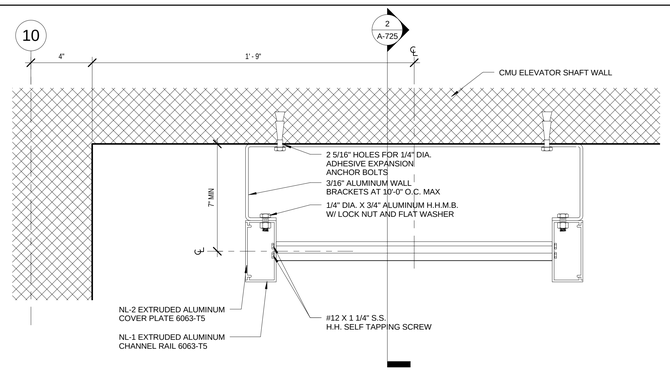

9 ELEVATOR - LADDER DETAIL

A-605 REF. A-605 SCALE: 3" = 1'-0"

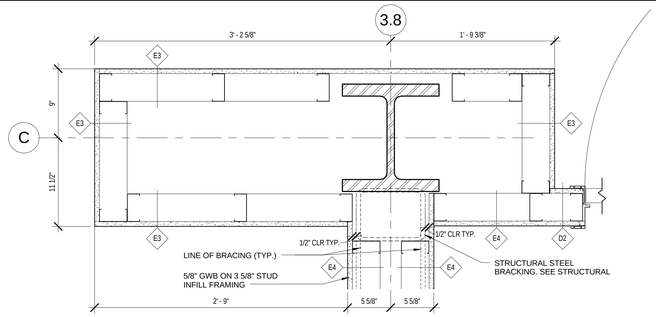

3 PANTRY/LOUNGE - PLAN DETAIL @ CROSS BRACING - RATED WALL

A-605 REF. A-101a SCALE: 1 1/2" = 1'-0"

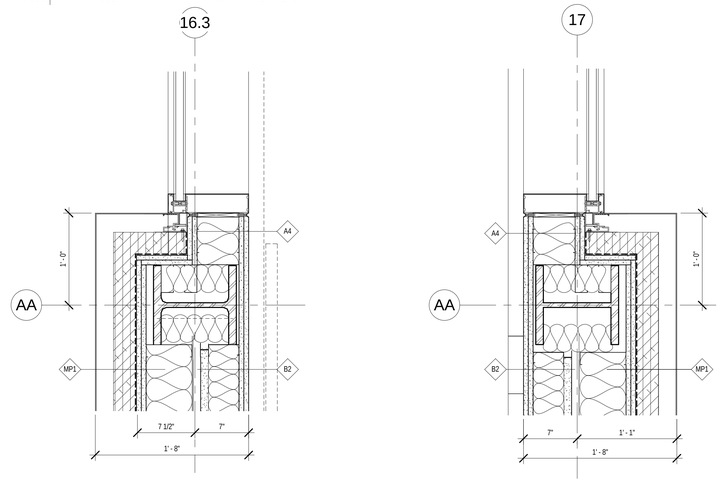

8 STAIR - PLAN DETAIL 3

A-605 REF. A-701 SCALE: 1 1/2" = 1'-0"

5 STAIR - PLAN DETAIL 1

A-605 REF. A-701 SCALE: 1 1/2" = 1'-0"

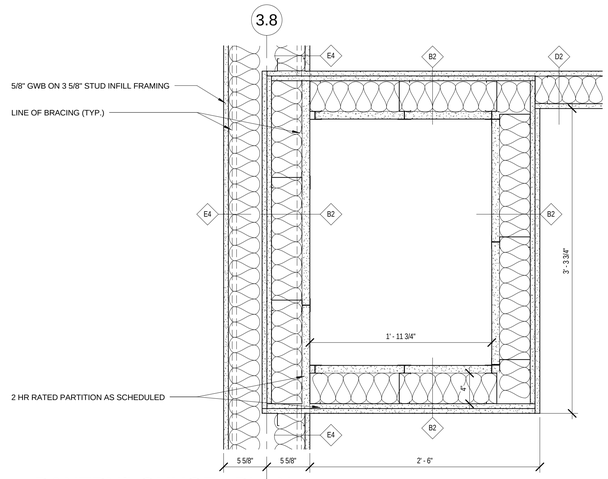

2 PANTRY/LOUNGE - PLAN DETAIL @ SHAFT

A-605 REF. A-101a SCALE: 1 1/2" = 1'-0"

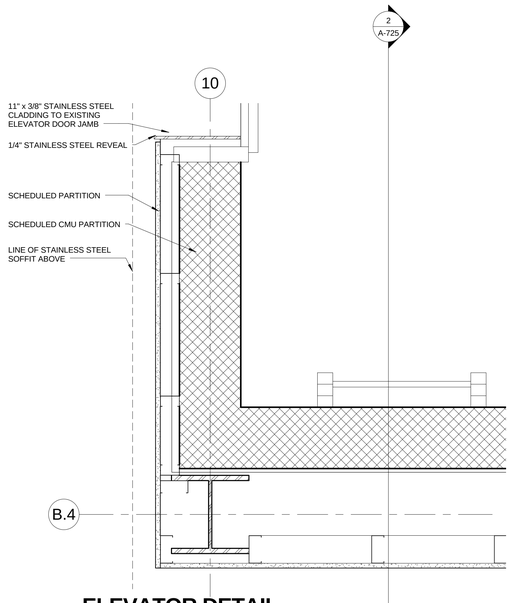

10 ELEVATOR DETAIL - INTERIOR CORNER

A-605 REF. A-724 SCALE: 1 1/2" = 1'-0"

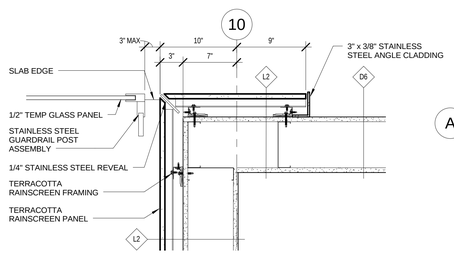

6 TERRACOTTA DETAIL @ STAIR 3 (LEVEL 1-3)

A-605 REF. A-704 SCALE: 1 1/2" = 1'-0"

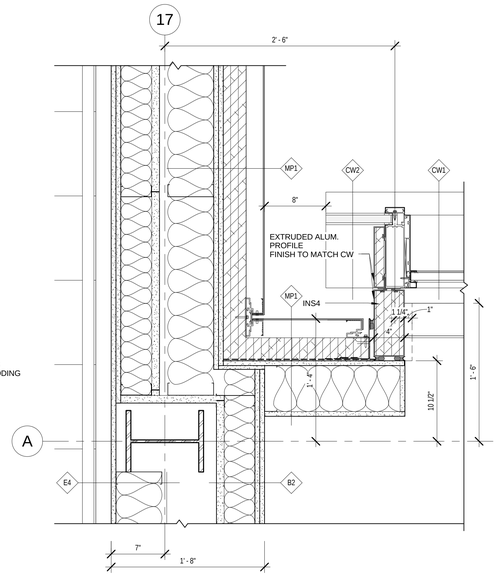

4 STAIR - PLAN DETAIL 2

A-605 REF. A-701 SCALE: 1 1/2" = 1'-0"

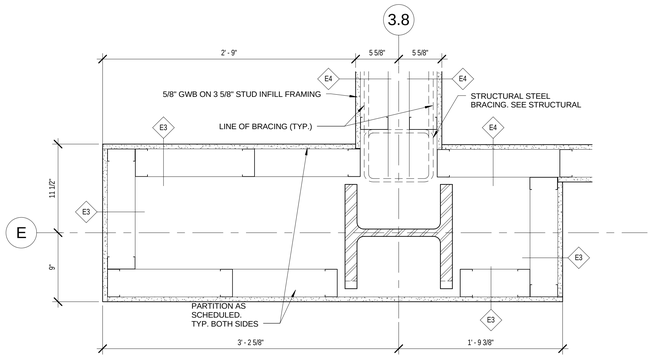

1 PANTRY/LOUNGE - PLAN DETAIL @ CROSS BRACING - NON RATED WALL

A-605 REF. A-101a SCALE: 1 1/2" = 1'-0"

100% SUBMITTAL

AECOM

AECOM TECHNICAL SERVICES, INC.
3101 WILSON BOULEVARD
SUITE 900
ARLINGTON, VA 22201

T: 703-682-4900 F: 703.682.4901
www.aecom.com

SEAL AREA

BOARD OF ARCHITECTS 10094 EDWARD J. WEBER STATE OF MARYLAND

KEY PLAN

REV	DATE	DESCRIPTION	S&R BR.	CUSTOMER	PM	SECT. HEAD

	INITIALS	DATE
DRAWN BY	LA/NS	
CHECKED BY	BW/MW	
A-E MANAGER	EW	
ENVIRONMENTAL BRANCH	JH	
SAFETY BRANCH	CS	
CM	MMD	
PM	RWP	
CUSTOMER	JWB	
ENG. BRANCH	DGL	
ARCHITECTURE		

PLAN DETAILS

A-605

FLIGHT PROJECTS BUILDING

NATIONAL AERONAUTICS AND SPACE ADMINISTRATION

GODDARD SPACE FLIGHT CENTER GREENBELT, MARYLAND
FACILITIES MANAGEMENT DIVISION

DATE ISSUED	CoF CODE OR WR#	AECOM PROJECT NO.	SCALE
10/12/2012	12GXAZ	60187636	As indicated

FILE DATE: 10/11/2012 4:12:31 PM

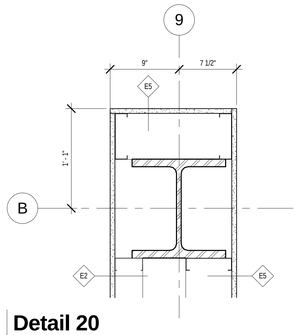

5 **Detail 20**

A-606 REF. A-101b SCALE: 1 1/2" = 1'-0"

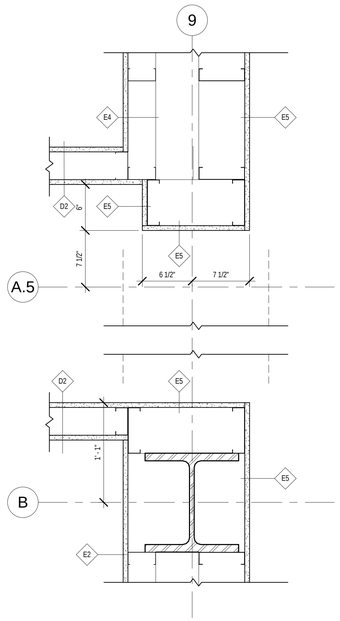

6 **Detail 23**

A-606 REF. A-102b SCALE: 1 1/2" = 1'-0"

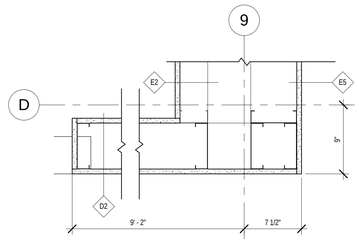

7 **Detail 22**

A-606 REF. A-101b SCALE: 1 1/2" = 1'-0"

100% SUBMITTAL

AECOM

AECOM TECHNICAL SERVICES, INC.
3101 WILSON BOULEVARD
SUITE 900
ARLINGTON, VA 22201

T: 703-682-4900 F: 703.682.4901
www.aecom.com

SEAL AREA

BOARD OF ARCHITECTS
10054
ELIZABETH D. WILSON
STATE OF MARYLAND

KEY PLAN

REV	DATE	DESCRIPTION	S&B BR.	CUSTOMER	PM	SECT. HEAD

	INITIALS	DATE
DRAWN BY	LA/NS	
CHECKED BY	BW/MW	
A-E MANAGER	EW	
ENVIRONMENTAL BRANCH	JH	
SAFETY BRANCH	CS	
CM	MMD	
PM	RWP	
CUSTOMER	JWB	
ENG. BRANCH	DGL	

PLAN DETAILS

A-606

FLIGHT PROJECTS BUILDING

NATIONAL AERONAUTICS AND SPACE ADMINISTRATION

GODDARD SPACE FLIGHT CENTER GREENBELT, MARYLAND
FACILITIES MANAGEMENT DIVISION

DATE ISSUED	CoF CODE OR WR#	AECOM PROJECT NO.	SCALE
10/12/2012	12GXAZ	60187636	1 1/2" = 1'-0"

FILE DATE: 10/11/2012 4:12:39 PM

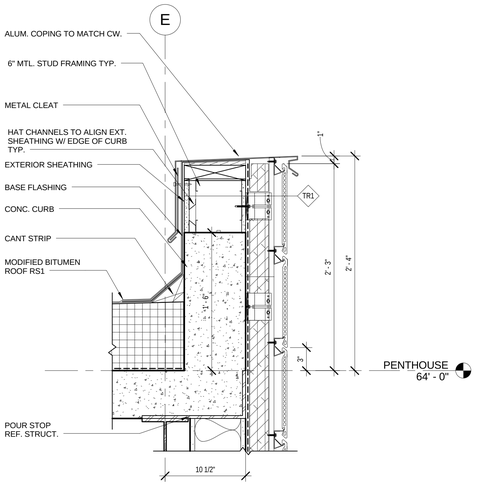

8 SECTION DETAIL

A-611 REF. A-401 SCALE: 1 1/2" = 1'-0"

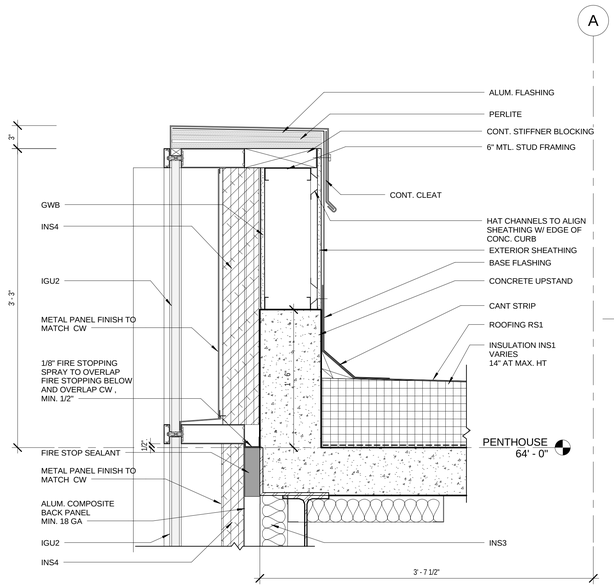

4 SECTION DETAIL

A-611 REF. A-402 SCALE: 1 1/2" = 1'-0"

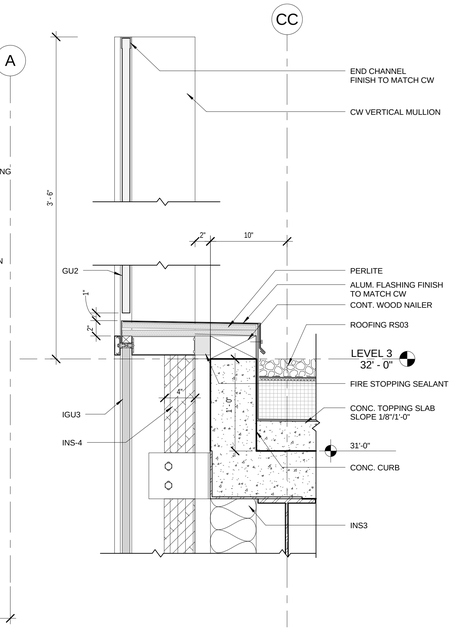

2 SECTION DETAIL

A-611 REF. A-402 SCALE: 1 1/2" = 1'-0"

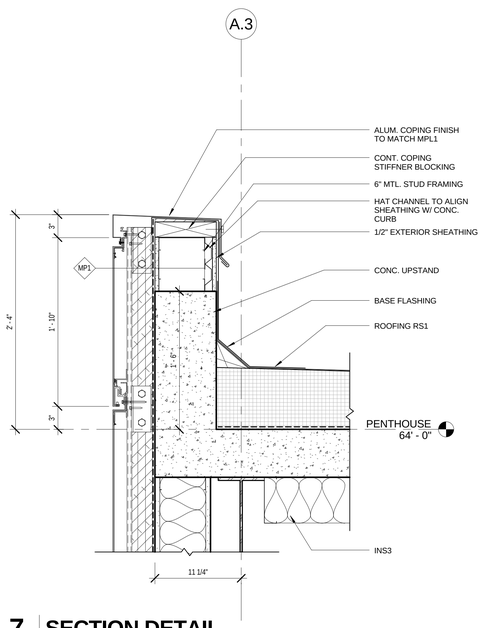

7 SECTION DETAIL

A-611 REF. A-401 SCALE: 1 1/2" = 1'-0"

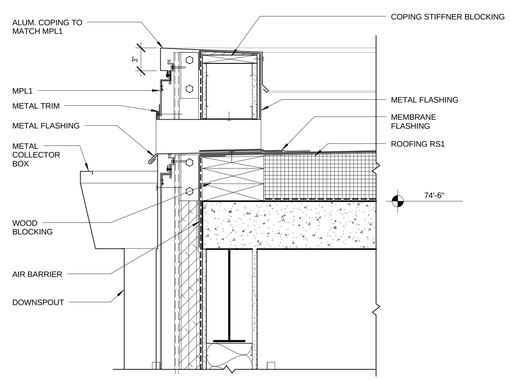

5 SECTION DETAIL

A-611 REF. SCALE: 1 1/2" = 1'-0"

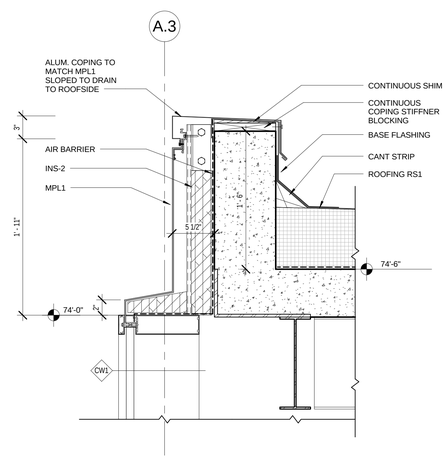

3 SECTION DETAIL

A-611 REF. A-401 SCALE: 1 1/2" = 1'-0"

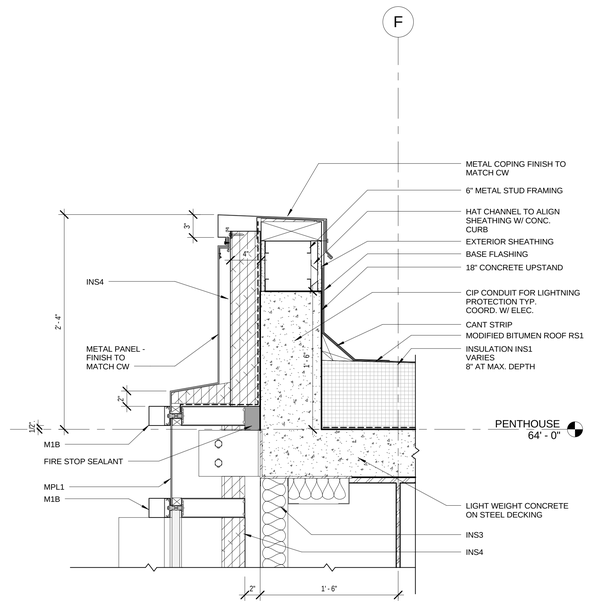

1 SECTION DETAIL

A-611 REF. A-401 SCALE: 1 1/2" = 1'-0"

100% SUBMITTAL

AECOM

AECOM TECHNICAL SERVICES, INC.
3101 WILSON BOULEVARD
SUITE 900
ARLINGTON, VA 22201

T: 703-682-4900 F: 703.682.4901
www.aecom.com

SEAL AREA

BOARD OF ARCHITECTS 10164 EDWARD D. WEIMER STATE OF MARYLAND

KEY PLAN

REV	DATE	DESCRIPTION	S&R BR.	CUSTOMER	PM	SECT. HEAD

	INITIALS	DATE
DRAWN BY	LA/NS	
CHECKED BY	BW/MW	
A-E MANAGER	EW	
ENVIRONMENTAL BRANCH	JH	
SAFETY BRANCH	CS	
CM	MMD	
PM	RWP	
CUSTOMER	JWB	
ENG. BRANCH	DGL	
ARCHITECTURE		

SECTIONAL DETAILS

A-611

FLIGHT PROJECTS BUILDING

NATIONAL AERONAUTICS AND SPACE ADMINISTRATION

GODDARD SPACE FLIGHT CENTER GREENBELT, MARYLAND
FACILITIES MANAGEMENT DIVISION

DATE ISSUED	CoF CODE OR WR#	AECOM PROJECT NO.	SCALE
10/12/2012	12GXAZ	60187636	1 1/2" = 1'-0"

FILE DATE: 10/11/2012 4:12:55 PM

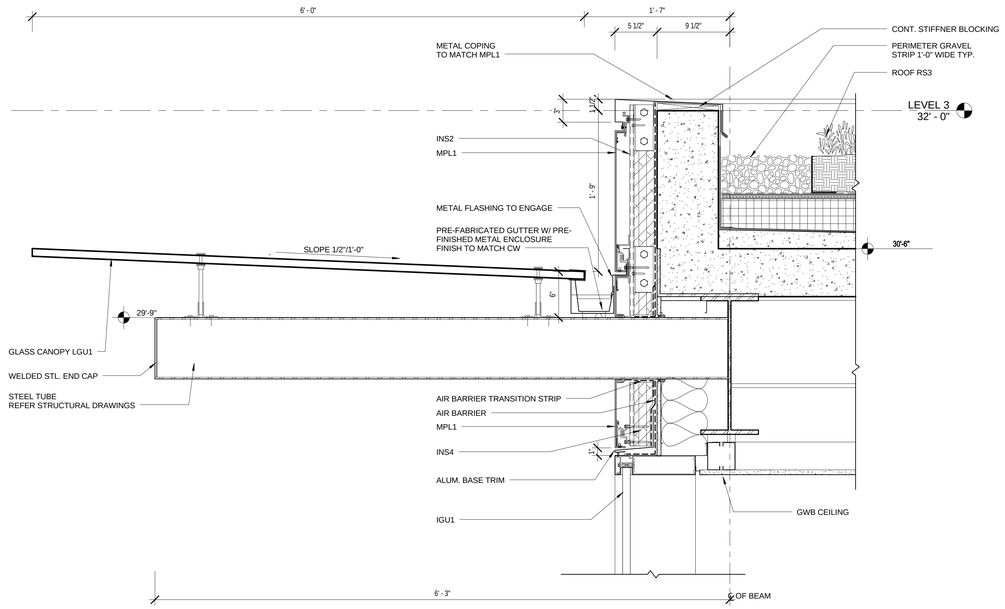

9 SECTION DETAIL

A-612 REF. A-403 SCALE: 1 1/2" = 1'-0"

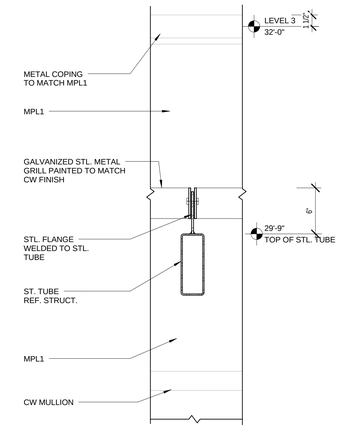

6 SECTION DETAIL

A-612 REF. A-612 SCALE: 1 1/2" = 1'-0"

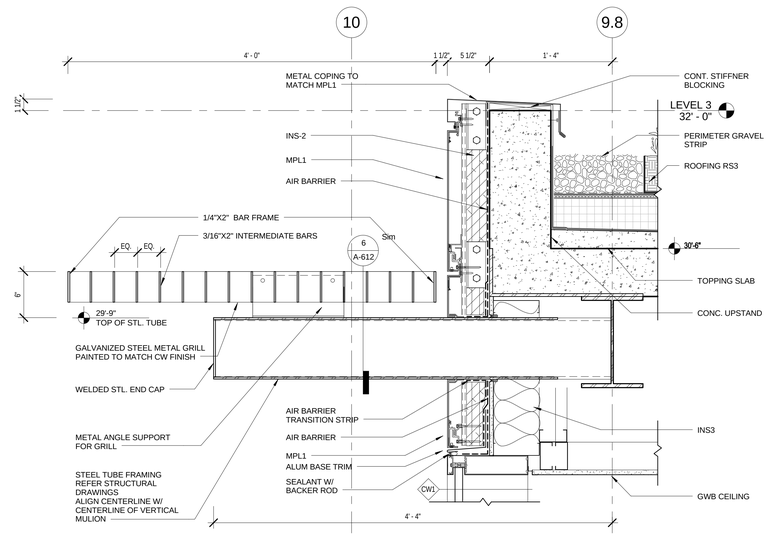

4 SECTION DETAIL

A-612 REF. A-403 SCALE: 1 1/2" = 1'-0"

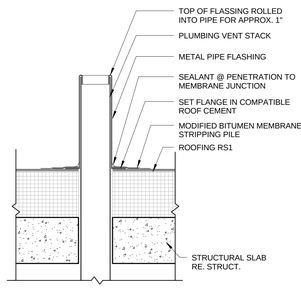

8 TYP. ROOF PIPE PENETRATION DETAIL

A-612 REF. SCALE: 1 1/2" = 1'-0"

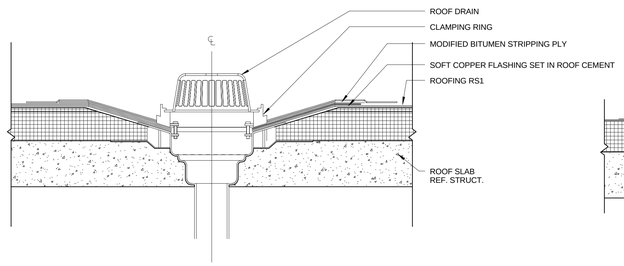

7 TYP. ROOF DRAIN DETAIL

A-612 REF. SCALE: 1 1/2" = 1'-0"

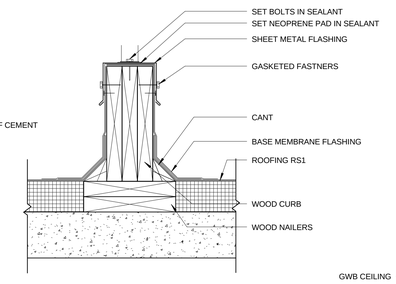

5 TYP. ROOF EQUIP. SUPPORT CURB DETAIL

A-612 REF. SCALE: 1 1/2" = 1'-0"

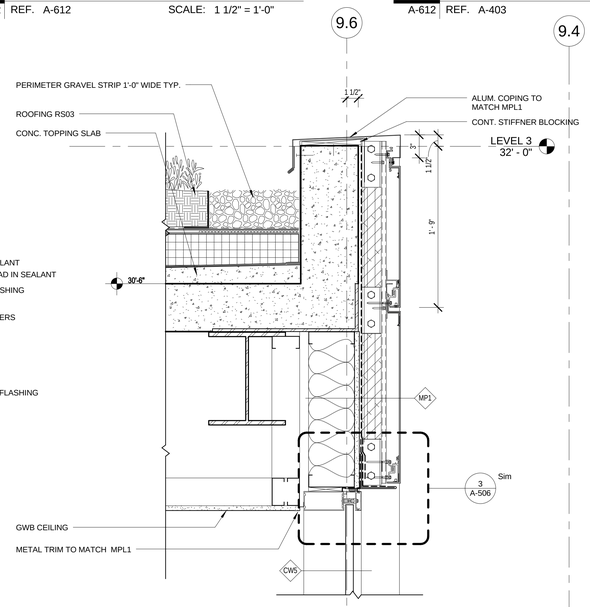

2 SECTION DETAIL

A-612 REF. A-403 SCALE: 1 1/2" = 1'-0"

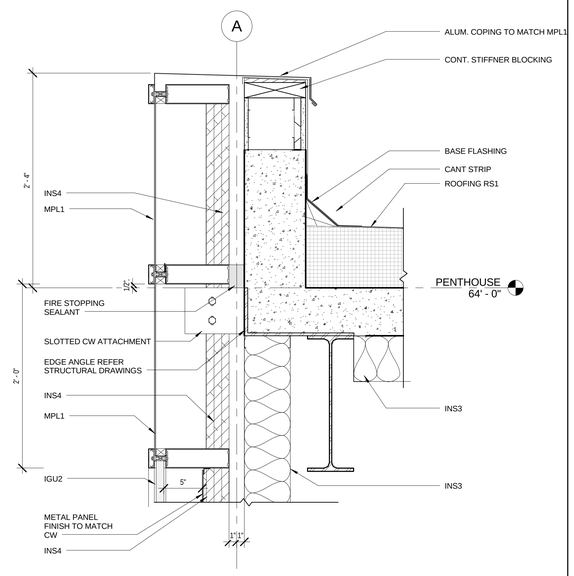

1 SECTION DETAIL

A-612 REF. A-402 SCALE: 1 1/2" = 1'-0"

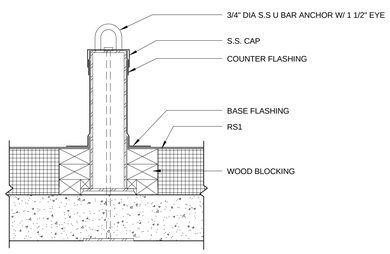

10 TYP. ROOF TIE OFF DETAIL

A-612 REF. SCALE: 1 1/2" = 1'-0"

100% SUBMITTAL

AECOM
AECOM TECHNICAL SERVICES, INC.
3101 WILSON BOULEVARD
SUITE 900
ARLINGTON, VA 22201
T: 703-682-4900 F: 703.682.4901
www.aecom.com

SEAL AREA

BOARD OF ARCHITECTS 10864 EDWARD W. WEIS STATE OF MARYLAND

KEY PLAN

REV	DATE	DESCRIPTION	S&R BR.	CUSTOMER	PM	SECT. HEAD

	INITIALS	DATE
DRAWN BY	LA/NS	
CHECKED BY	BW/MW	
A-E MANAGER	EW	
ENVIRONMENTAL BRANCH	JH	
SAFETY BRANCH	CS	
CM	MMD	
PM	RWP	
CUSTOMER	JWB	
ENG. BRANCH	DGL	

SECTIONAL DETAILS

A-612

FLIGHT PROJECTS BUILDING

NATIONAL AERONAUTICS AND SPACE ADMINISTRATION

GODDARD SPACE FLIGHT CENTER GREENBELT, MARYLAND
FACILITIES MANAGEMENT DIVISION

DATE ISSUED	CoF CODE OR WR#	AECOM PROJECT NO.	SCALE
10/12/2012	12GXAZ	60187636	1 1/2" = 1'-0"

FILE DATE: 10/11/2012 4:13:06 PM

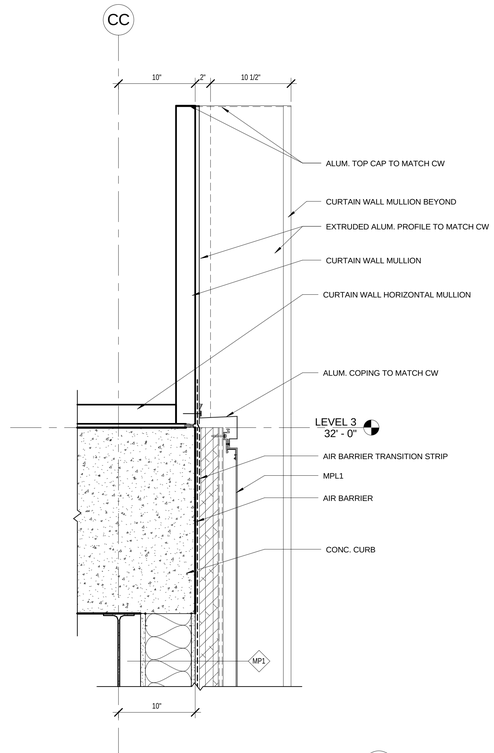

4 SECTION DETAIL

A-613 REF. A-604 SCALE: 1 1/2" = 1'-0"

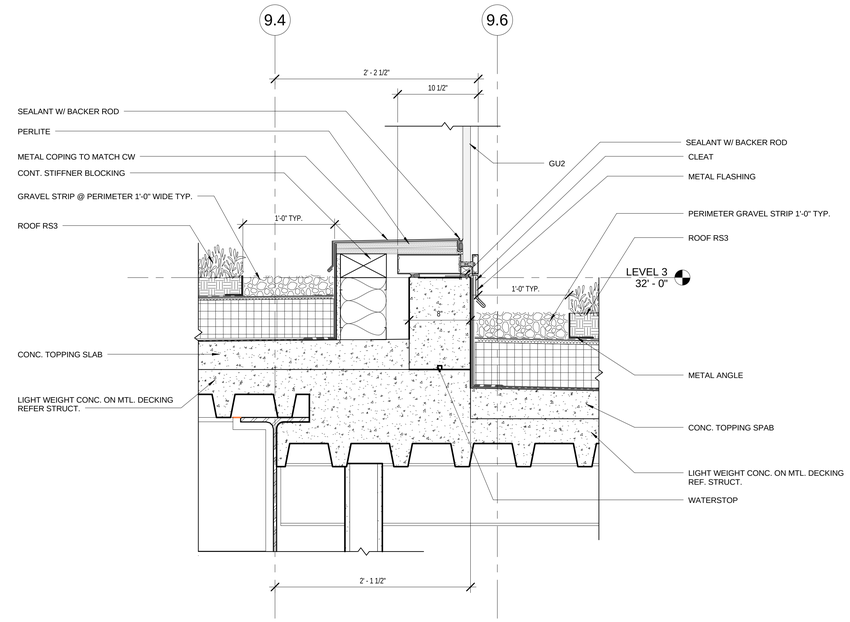

2 SECTION DETAIL

A-613 REF. A-604 SCALE: 1 1/2" = 1'-0"

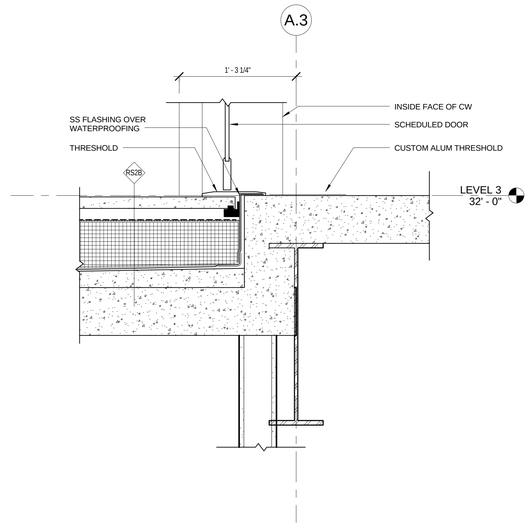

5 SECTION DETAIL

A-613 REF. A-402 SCALE: 1 1/2" = 1'-0"

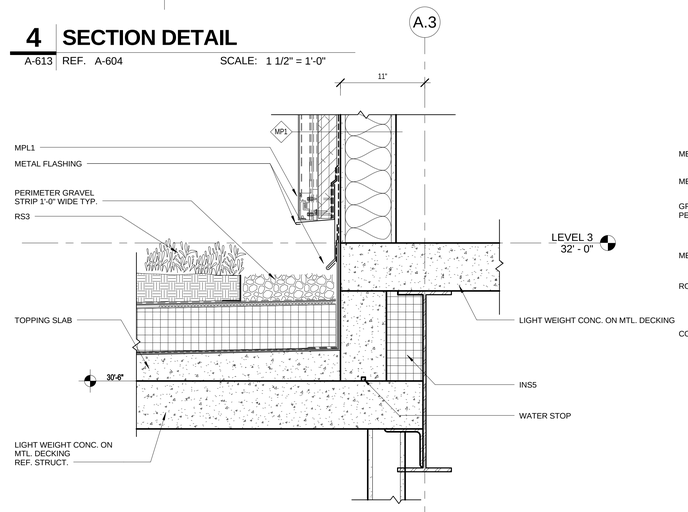

3 SECTION DETAIL

A-613 REF. A-401 SCALE: 1 1/2" = 1'-0"

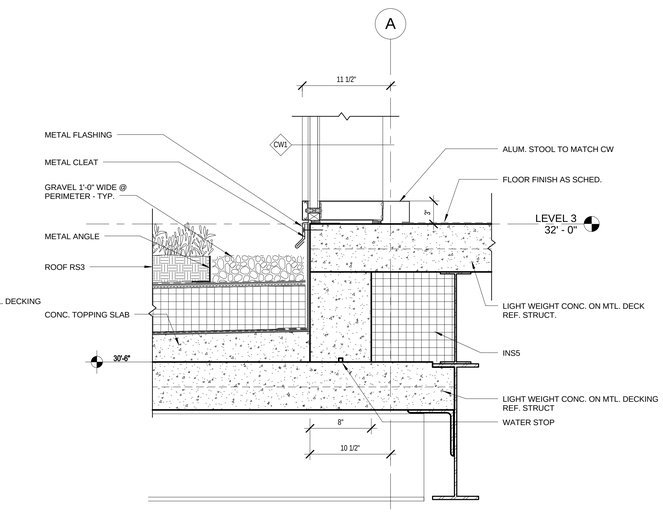

1 SECTION DETAIL

A-613 REF. A-403 SCALE: 1 1/2" = 1'-0"

100% SUBMITTAL

AECOM

AECOM TECHNICAL SERVICES, INC.
3101 WILSON BOULEVARD
SUITE 900
ARLINGTON, VA 22201

T: 703-682-4900 F: 703.682.4901
www.aecom.com

SEAL AREA

BOARD OF ARCHITECTS 10164 EDWARD J. WEBER STATE OF MARYLAND

KEY PLAN

REV	DATE	DESCRIPTION	S&R BR.	CUSTOMER	PM	SECT. HEAD

	INITIALS	DATE
DRAWN BY	LA/NS	
CHECKED BY	BW/MW	
A-E MANAGER	EW	
ENVIRONMENTAL BRANCH	JH	
SAFETY BRANCH	CS	
CM	MMD	
PM	RWP	
CUSTOMER	JWB	
ENG. BRANCH	DGL	

SECTIONAL DETAILS

A-613

FLIGHT PROJECTS BUILDING

NATIONAL AERONAUTICS AND SPACE ADMINISTRATION

GODDARD SPACE FLIGHT CENTER GREENBELT, MARYLAND
FACILITIES MANAGEMENT DIVISION

DATE ISSUED	CoF CODE OR WR#	AECOM PROJECT NO.	SCALE
10/12/2012	12GXAZ	60187636	1 1/2" = 1'-0"

FILE DATE: 10/11/2012 4:13:21 PM

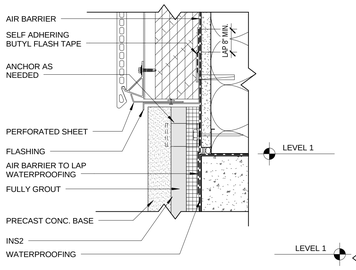

9 TYP. TR1 WALL BASE FLASHING DETAIL

A-614 REF. SCALE: 3" = 1'-0"

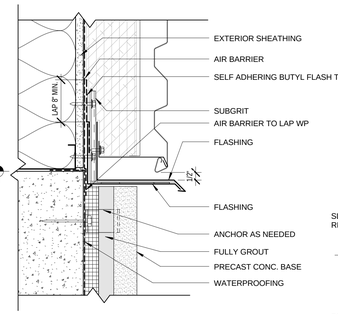

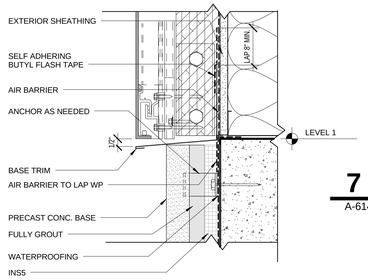

7 TYP. BASE FLASHING DETAIL @ MP2

A-614 REF. SCALE: 3" = 1'-0"

8 TYP. BASE FLASHING DETAIL @ MP1

A-614 REF. SCALE: 3" = 1'-0"

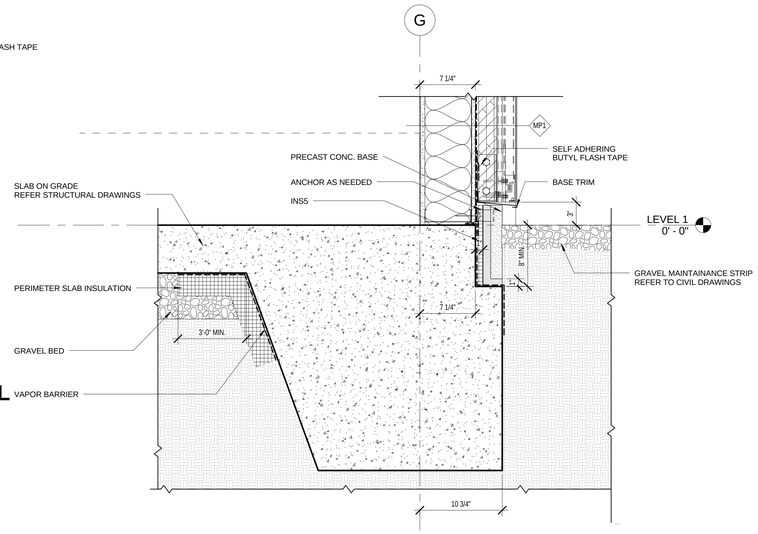

5 SECTION DETAIL

A-614 REF. A-211 SCALE: 1 1/2" = 1'-0"

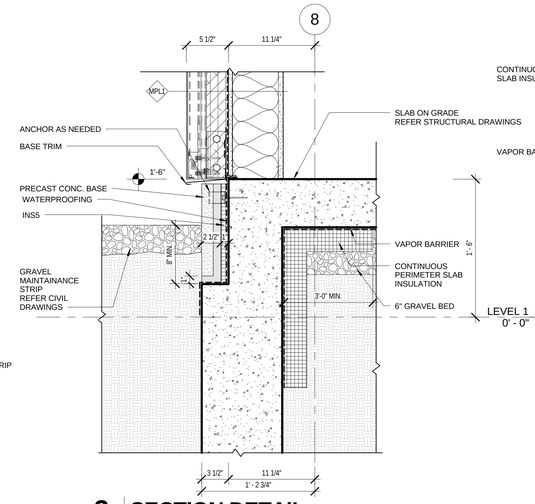

3 SECTION DETAIL

A-614 REF. A-401 SCALE: 1 1/2" = 1'-0"

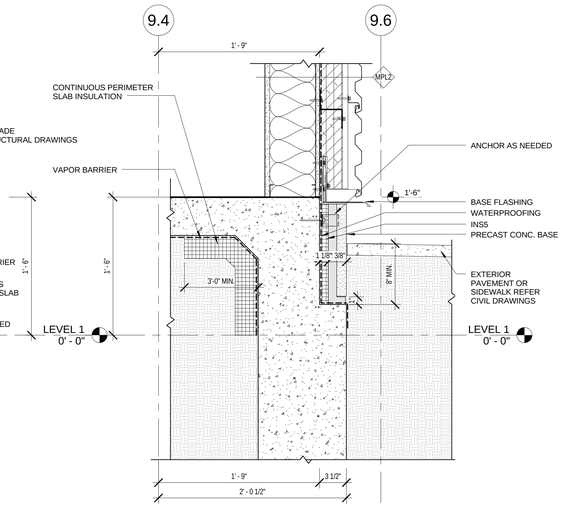

2 SECTION DETAIL

A-614 REF. A-211 SCALE: 1 1/2" = 1'-0"

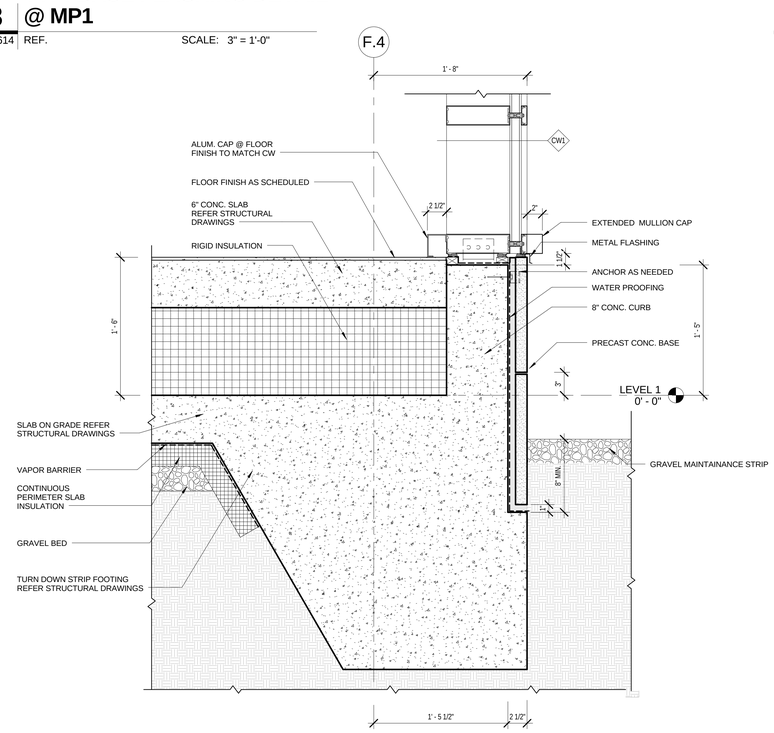

6 SECTION DETAIL

A-614 REF. A-211 SCALE: 1 1/2" = 1'-0"

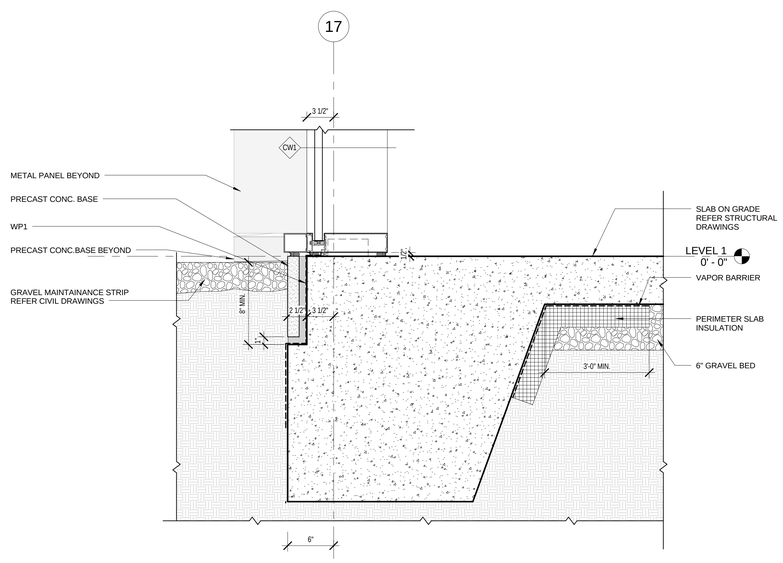

4 SECTION DETAIL

A-614 REF. A-211 SCALE: 1 1/2" = 1'-0"

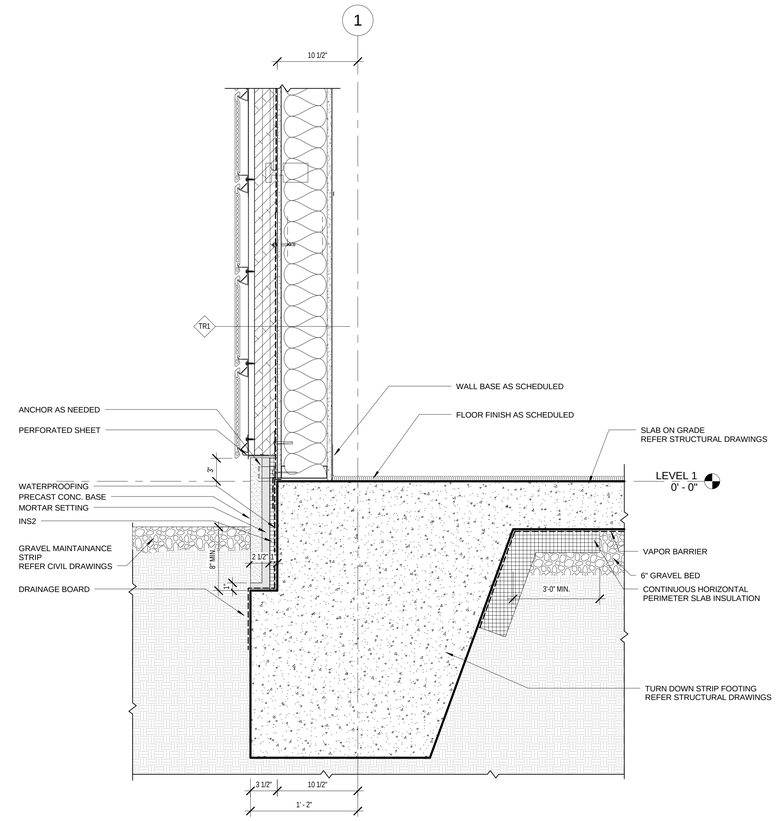

100% SUBMITTAL

1 SECTION DETAIL

A-614 REF. A-211 SCALE: 1 1/2" = 1'-0"

GENERAL NOTES:

1. FOR TYPICAL BASE FLASHING DETAILS REFER ENLARGED DETAILS 7/A-613, 8/A-9/A- & 613.

AECOM

AECOM TECHNICAL SERVICES, INC.
3101 WILSON BOULEVARD
SUITE 900
ARLINGTON, VA 22201

T: 703-682-4900 F: 703.682.4901
www.aecom.com

SEAL AREA

BOARD OF ARCHITECTS 10164 BRUCE D. WEBER STATE OF MARYLAND

KEY PLAN

REV	DATE	DESCRIPTION	S&R BR.	CUSTOMER	PM	SECT. HEAD

	INITIALS	DATE
DRAWN BY	LA/NS	
CHECKED BY	BW/MW	
A-E MANAGER	EW	
ENVIRONMENTAL BRANCH	JH	
SAFETY BRANCH	CS	
CM	MMD	
PM	RWP	
CUSTOMER	JWB	
ENG. BRANCH	DGL	

SECTIONAL DETAILS

A-614

FLIGHT PROJECTS BUILDING

NATIONAL AERONAUTICS AND SPACE ADMINISTRATION

GODDARD SPACE FLIGHT CENTER GREENBELT, MARYLAND
FACILITIES MANAGEMENT DIVISION

DATE ISSUED	CoF CODE OR WR#	AECOM PROJECT NO.	SCALE
10/12/2012	12GXAZ	60187636	As indicated

FILE DATE: 10/11/2012 4:13:33 PM

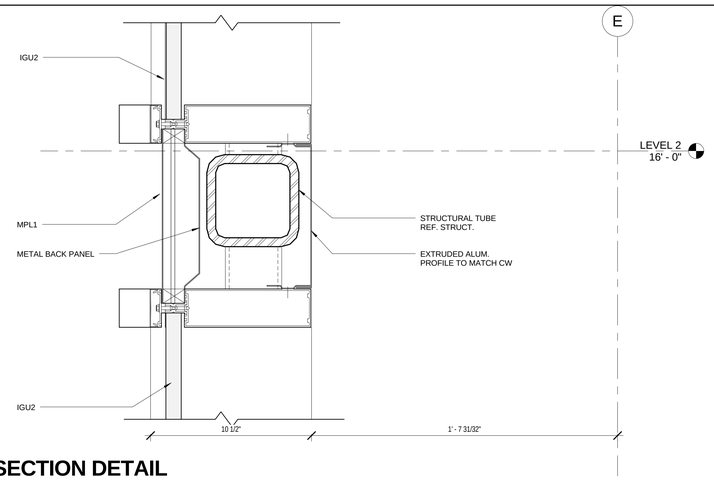

4 SECTION DETAIL

A-615 REF. A-601 SCALE: 3" = 1'-0"

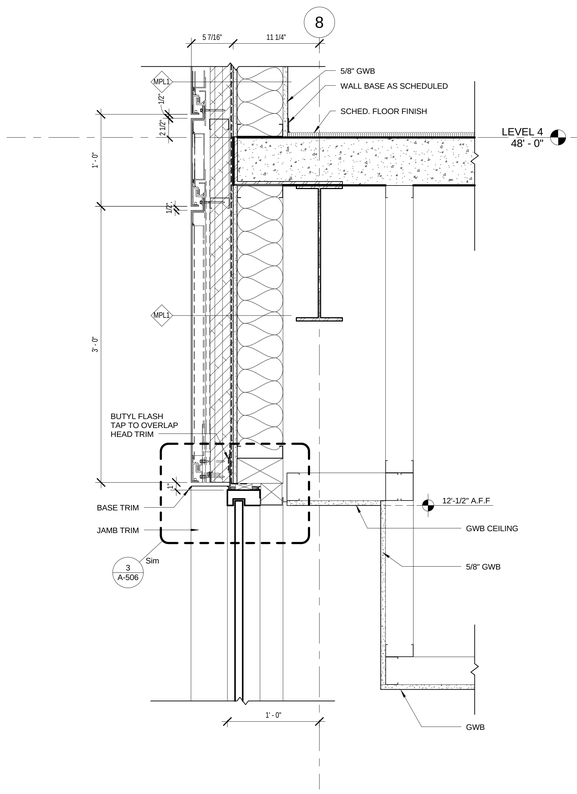

5 SECTION DETAIL

A-615 REF. A-403 SCALE: 1 1/2" = 1'-0"

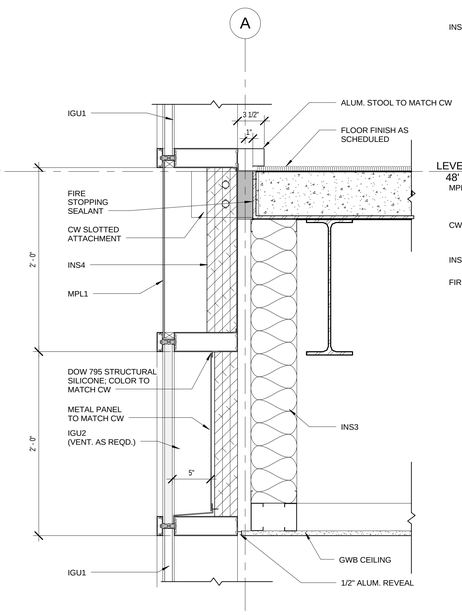

CONTRACTOR TO PROVIDE ENGINEERING JUDGEMENT FOR SUBMISSION TO AHJ.

3 SECTION DETAIL

A-615 REF. A-403 SCALE: 1 1/2" = 1'-0"

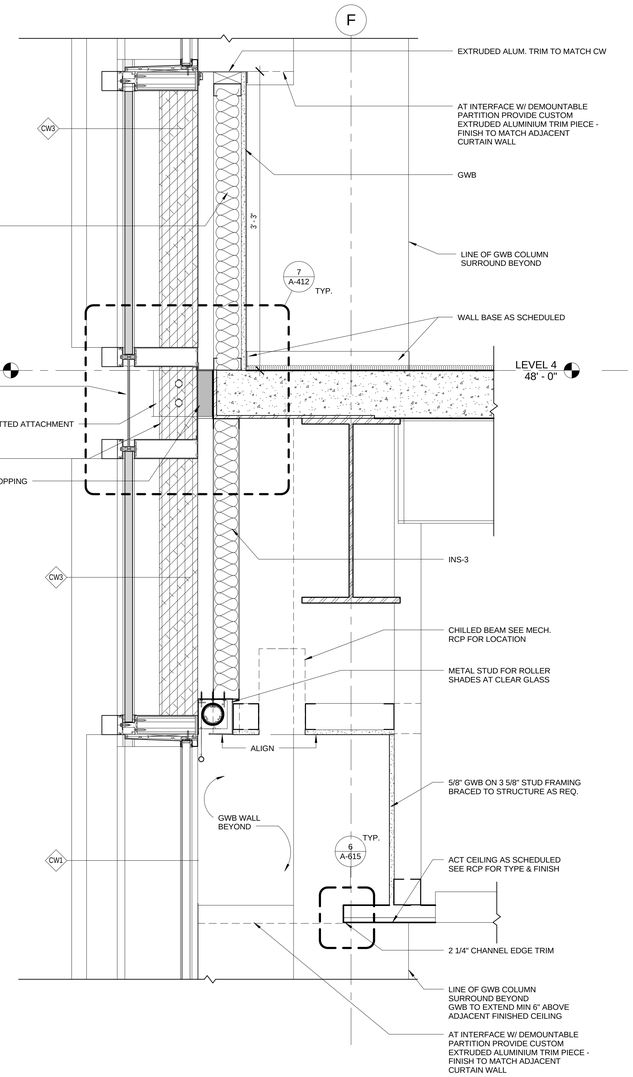

2 SECTION DETAIL

A-615 REF. A-502 SCALE: 1 1/2" = 1'-0"

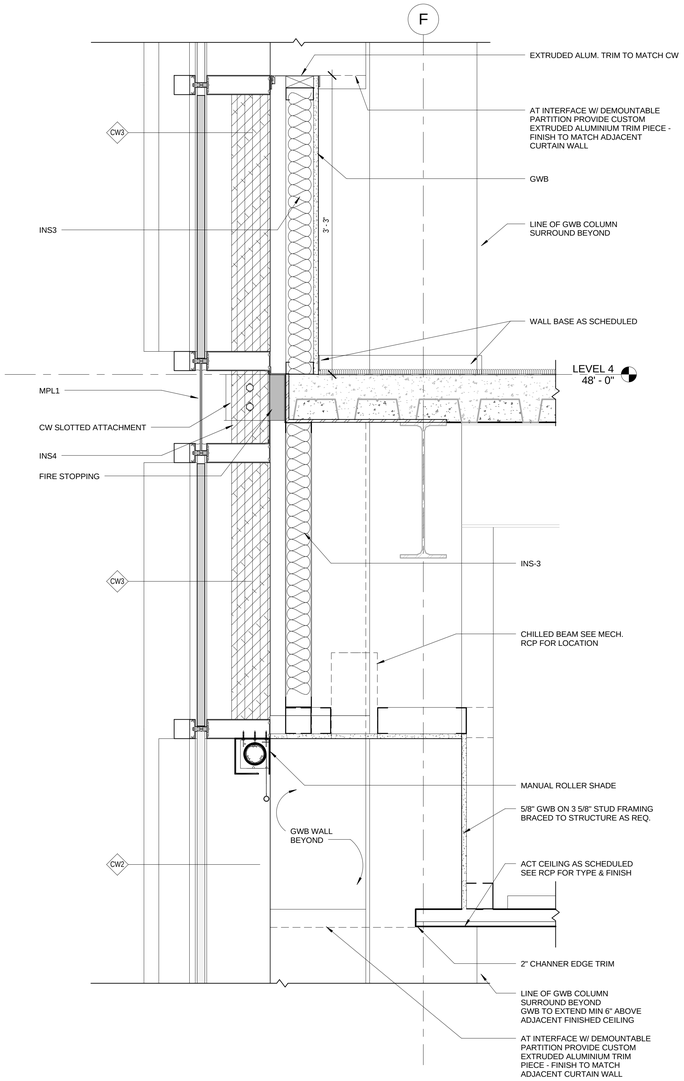

1 SECTION DETAIL

A-615 REF. A-502 SCALE: 1 1/2" = 1'-0"

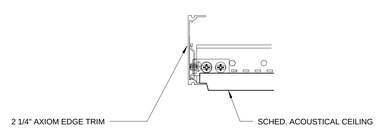

6 TYP. PERIMETER CEILING EDGE TRIM DETAIL

A-615 REF. A-506 SCALE: 6" = 1'-0"

100% SUBMITTAL

AECOM

AECOM TECHNICAL SERVICES, INC.
3101 WILSON BOULEVARD
SUITE 900
ARLINGTON, VA 22201

T: 703-682-4900 F: 703.682.4901
www.aecom.com

SEAL AREA

BOARD OF ARCHITECTS
REGISTERED ARCHITECT
STATE OF MARYLAND

KEY PLAN

REV	DATE	DESCRIPTION	S&R BR.	CUSTOMER	PM	SECT. HEAD

	INITIALS	DATE
DRAWN BY	LA/NS	
CHECKED BY	BW/MW	
A-E MANAGER	EW	
ENVIRONMENTAL BRANCH	JH	
SAFETY BRANCH	CS	
CM	MMD	
PM	RWP	
CUSTOMER	JWB	
ENG. BRANCH	DGL	

SECTIONAL DETAILS

A-615

FLIGHT PROJECTS BUILDING

NATIONAL AERONAUTICS AND SPACE ADMINISTRATION

GODDARD SPACE FLIGHT CENTER GREENBELT, MARYLAND
FACILITIES MANAGEMENT DIVISION

DATE ISSUED	CoF CODE OR WR#	AECOM PROJECT NO.	SCALE
10/12/2012	12GXAZ	60187636	As indicated

FILE DATE: 10/11/2012 4:13:42 PM

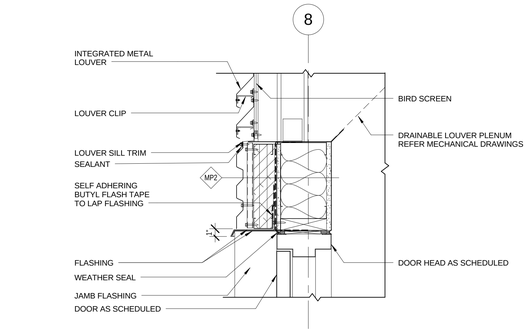

6 SECTION DETAIL

A-616 REF. A-313 SCALE: 1 1/2" = 1'-0"

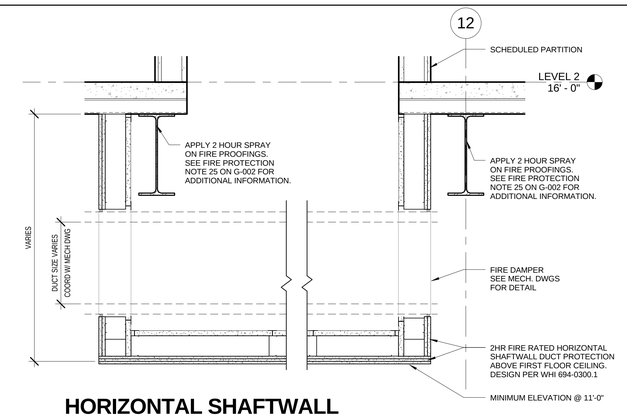

5 HORIZONTAL SHAFTWALL DUCT PROTECTION DETAIL

A-616 REF. A-102b SCALE: 1" = 1'-0"

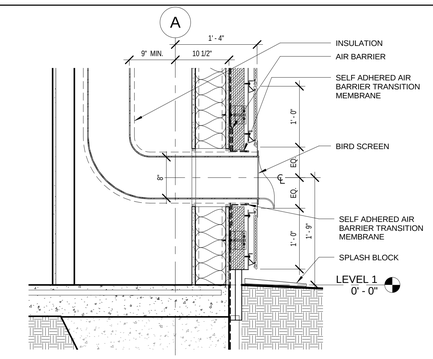

3 STORM & OVERFLOW DRAIN PENETRATION DETAIL @ TERRACOTTA

A-616 REF. A-311 SCALE: 1" = 1'-0"

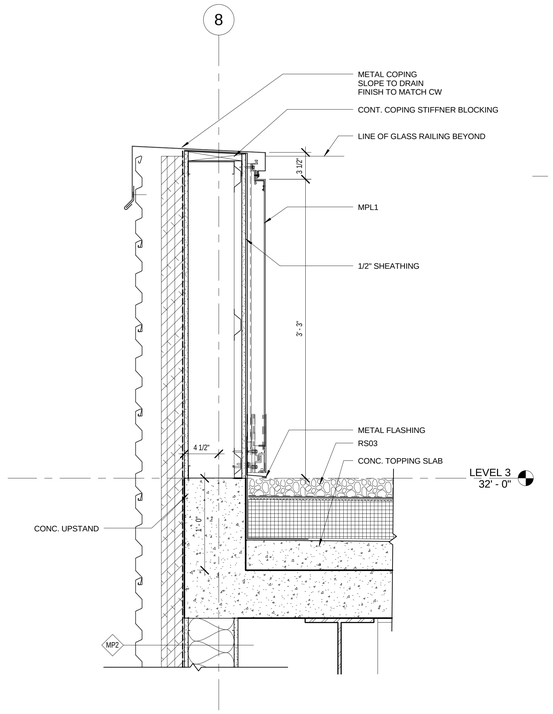

1 SECTION DETAIL

A-616 REF. A-401 SCALE: 1 1/2" = 1'-0"

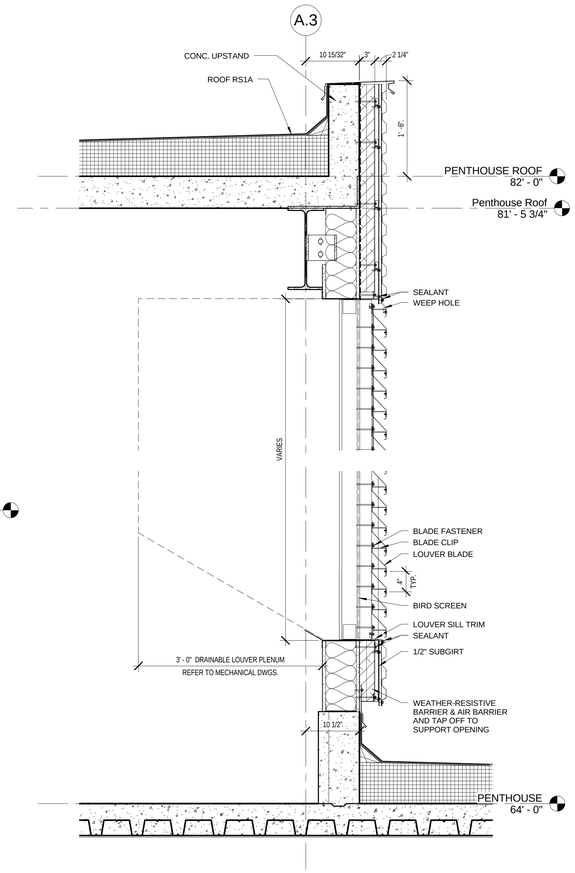

4 LOUVER DETAIL

A-616 REF. A-311 SCALE: 1" = 1'-0"

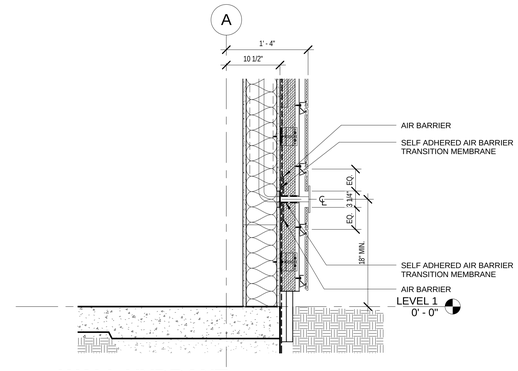

2 WALL HYDRANT PENETRATION DETAIL @ TERRACOTTA

A-616 REF. A-311 SCALE: 1" = 1'-0"

100% SUBMITTAL

AECOM

AECOM TECHNICAL SERVICES, INC.
3101 WILSON BOULEVARD
SUITE 900
ARLINGTON, VA 22201

T: 703-682-4900 F: 703.682.4901
www.aecom.com

SEAL AREA

BOARD OF ARCHITECTS
EDWARD WEISS
STATE OF MARYLAND

KEY PLAN

REV	DATE	DESCRIPTION	S&R BR.	CUSTOMER	PM	SECT. HEAD

	INITIALS	DATE
DRAWN BY	LA/NS	
CHECKED BY	BW/MW	
A-E MANAGER	EW	
ENVIRONMENTAL BRANCH	JH	
SAFETY BRANCH	CS	
CM	MMD	
PM	RWP	
CUSTOMER	JWB	
ENG. BRANCH	DGL	

SECTIONAL DETAILS

A-616

FLIGHT PROJECTS BUILDING

NATIONAL AERONAUTICS AND SPACE ADMINISTRATION
GODDARD SPACE FLIGHT CENTER GREENBELT, MARYLAND
FACILITIES MANAGEMENT DIVISION

DATE ISSUED	CoF CODE OR WR#	AECOM PROJECT NO.	SCALE
10/12/2012	12GXAZ	60187636	As indicated

FILE DATE: 10/11/2012 4:13:59 PM

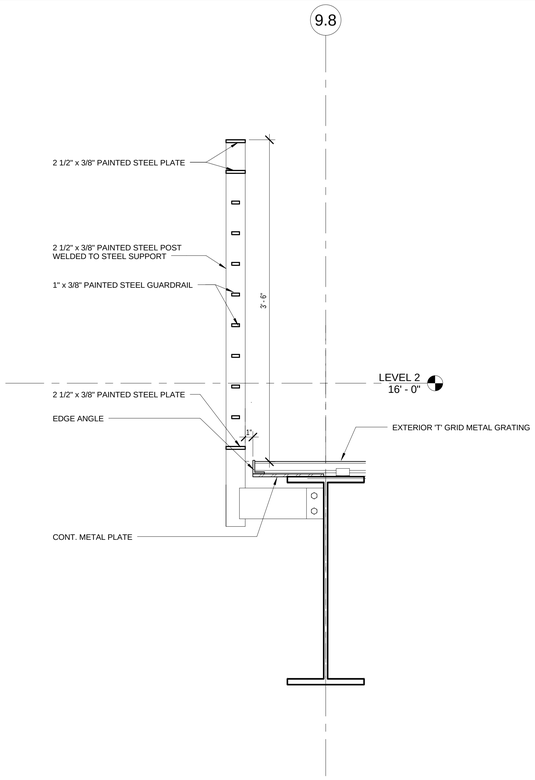

7 SECTION DETAIL - BRIDGE GUARD RAIL

A-617 REF. A-404 SCALE: 1 1/2" = 1'-0"

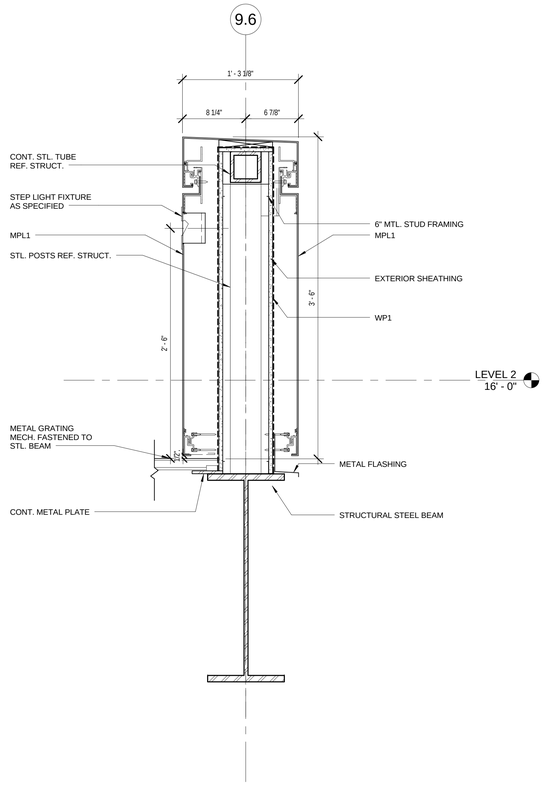

5 SECTION DETAIL - BRIDGE - SIDE WALL

A-617 REF. A-404 SCALE: 1 1/2" = 1'-0"

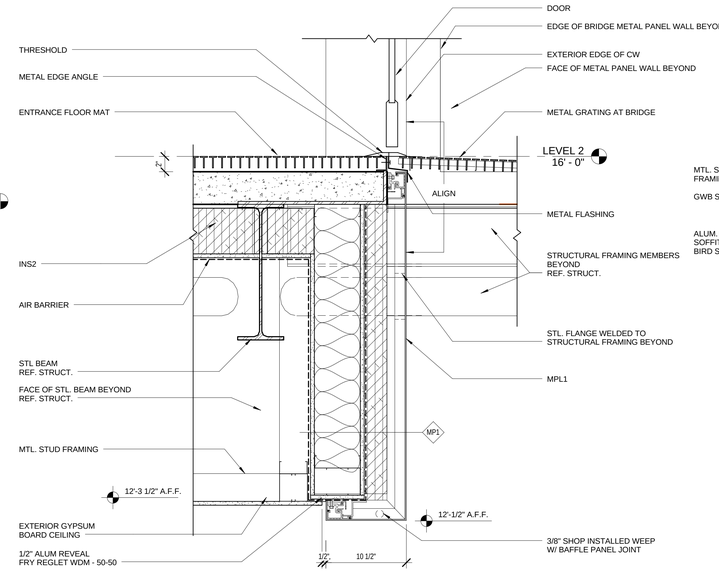

3 SECTION DETAIL

A-617 REF. A-201b SCALE: 1 1/2" = 1'-0"

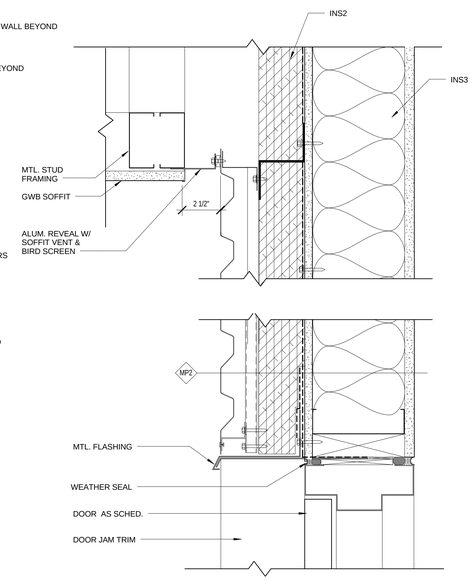

2 SECTION DETAIL

A-617 REF. A-201b SCALE: 3" = 1'-0"

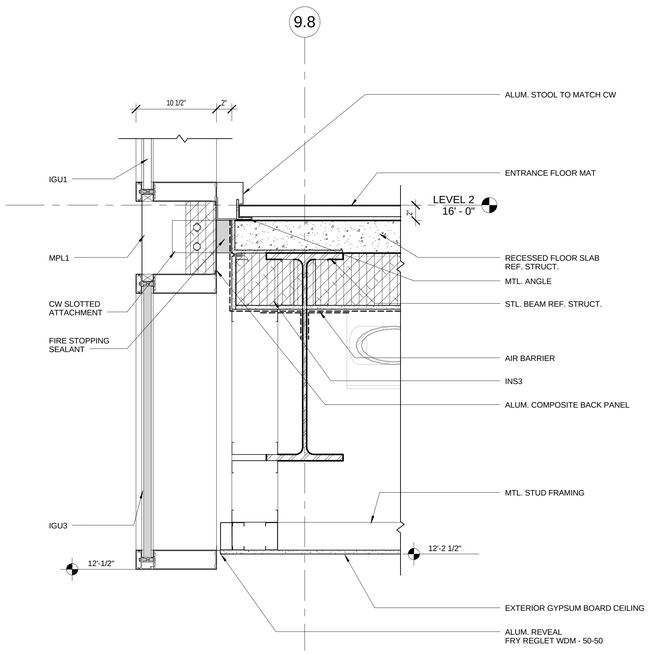

CONTRACTOR TO PROVIDE ENGINEERING JUDGEMENT FOR SUBMISSION TO AHJ.

6 SECTION DETAIL

A-617 REF. A-403 SCALE: 1 1/2" = 1'-0"

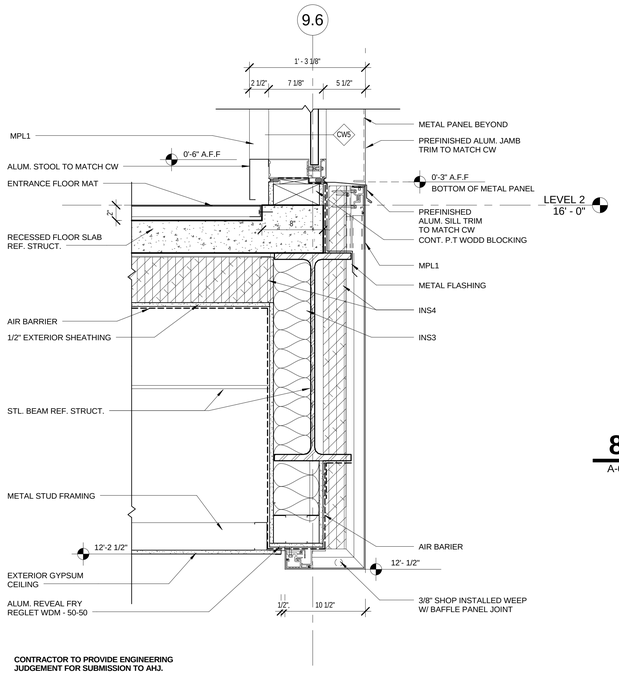

CONTRACTOR TO PROVIDE ENGINEERING JUDGEMENT FOR SUBMISSION TO AHJ.

4 SECTION DETAIL

A-617 REF. A-403 SCALE: 1 1/2" = 1'-0"

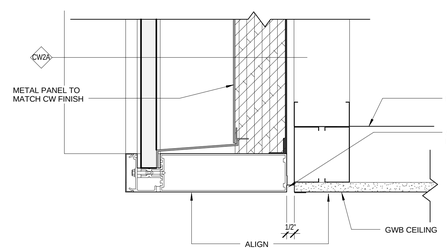

8 SECTION DETAIL

A-617 REF. A-402 SCALE: 3" = 1'-0"

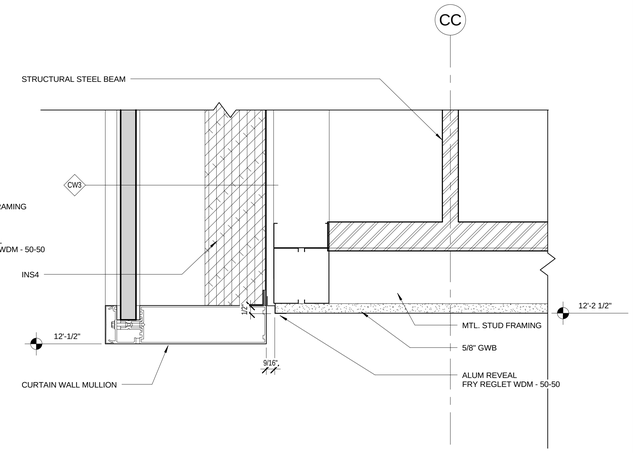

1 SECTION DETAIL

A-617 REF. A-201b SCALE: 3" = 1'-0"

100% SUBMITTAL

AECOM

AECOM TECHNICAL SERVICES, INC.
3101 WILSON BOULEVARD
SUITE 900
ARLINGTON, VA 22201

T: 703-682-4900 F: 703.682.4901
www.aecom.com

SEAL AREA

BOARD OF ARCHITECTS 10084 ERNESTO D. WARNER REGISTERED ARCHITECT STATE OF MARYLAND

KEY PLAN

REV	DATE	DESCRIPTION	S&R BR.	CUSTOMER	PM	SECT. HEAD

	INITIALS	DATE
DRAWN BY	LA/NS	
CHECKED BY	BW/MW	
A-E MANAGER	EW	
ENVIRONMENTAL BRANCH	JH	
SAFETY BRANCH	CS	
CM	MMD	
PM	RWP	
CUSTOMER	JWB	
ENG. BRANCH	DGL	

SECTIONAL DETAILS

A-617

FLIGHT PROJECTS BUILDING

NATIONAL AERONAUTICS AND SPACE ADMINISTRATION

GODDARD SPACE FLIGHT CENTER GREENBELT, MARYLAND
FACILITIES MANAGEMENT DIVISION

DATE ISSUED	CoF CODE OR WR#	AECOM PROJECT NO.	SCALE
10/12/2012	12GXAZ	60187636	As indicated

FILE DATE: 10/11/2012 4:14:08 PM

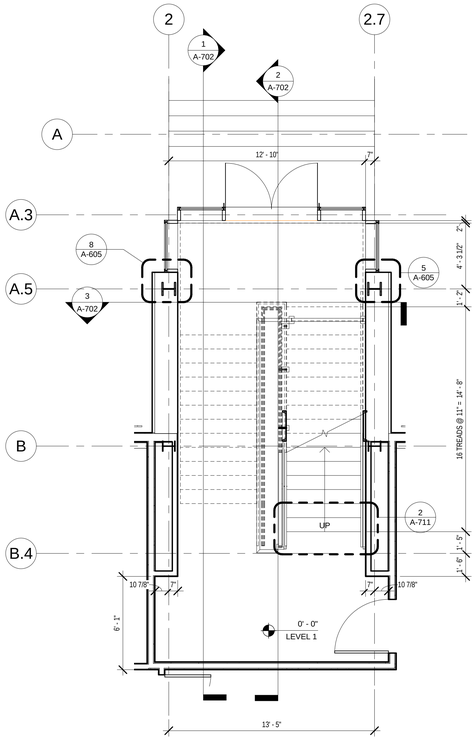

1 STAIR #1 - LEVEL 1

A-701 REF. A-101a SCALE: 1/4" = 1'-0"

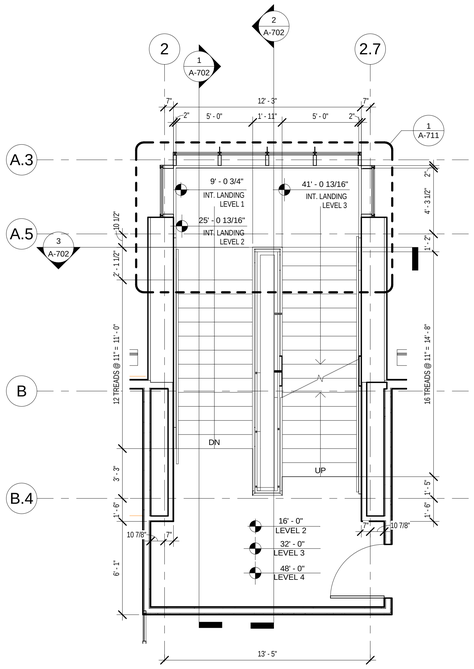

2 STAIR #1 - LEVEL 2, 3 & 4

A-701 REF. A-102a SCALE: 1/4" = 1'-0"

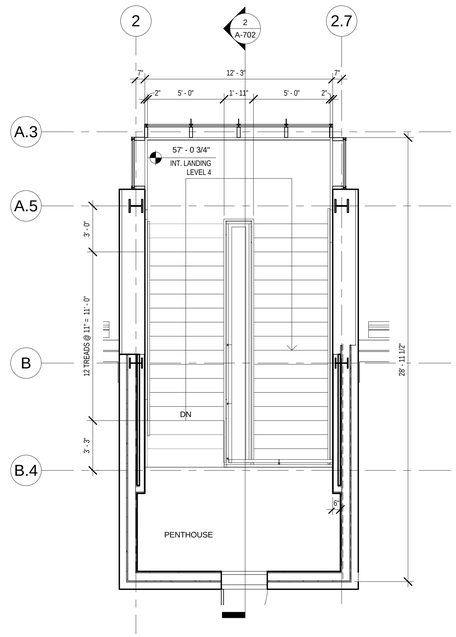

3 STAIR #1 - PENTHOUSE

A-701 REF. SCALE: 1/4" = 1'-0"

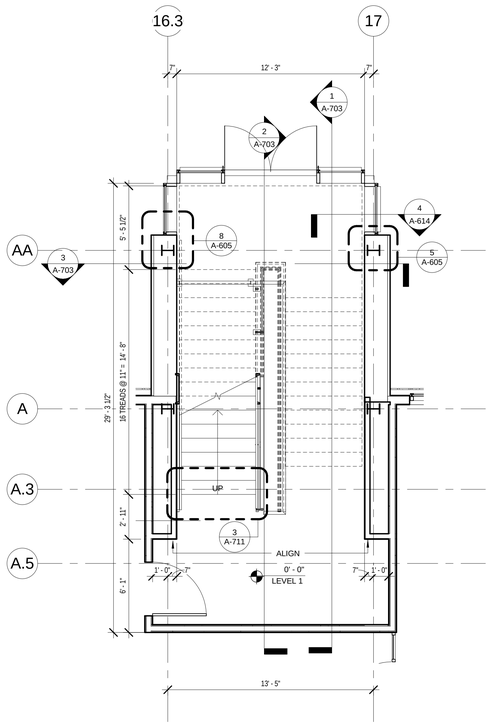

4 STAIR #2 - LEVEL 1

A-701 REF. A-101b SCALE: 1/4" = 1'-0"

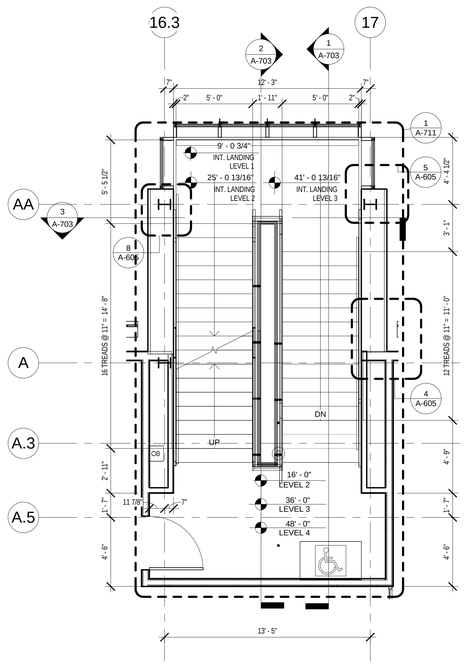

5 STAIR #2 - LEVEL 2, 3 & 4

A-701 REF. A-102b SCALE: 1/4" = 1'-0"

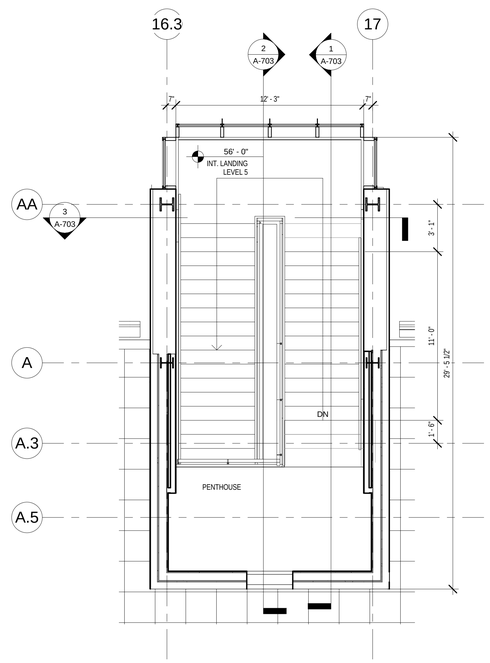

6 STAIR #2 - PENTHOUSE

A-701 REF. A-106 SCALE: 1/4" = 1'-0"

GENERAL STAIR NOTES:

1. ALL WORK SHALL CONFORM TO ALL APPLICABLE CODES, REGULATIONS AND REQUIREMENTS OF ALL GOVERNING AUTHORITIES. REFER TO THE GENERAL NOTES SHEETS FOR APPLICABLE CODES.
2. ALL DIMENSIONS SHALL BE VERIFIED WITH FIELD CONDITIONS. THE G.C. SHALL INFORM THE CLIENT BEFORE PROCEEDING WITH ANY DIMENSIONAL MODIFICATION DUE TO FIELD CONDITIONS.
3. MANUFACTURER'S OR VENDOR'S NAMEPLATE, TRADEMARKS, LOGOS OR OTHER IDENTIFICATIONS SHALL NOT BE VISIBLE WITHIN ANY PUBLIC OR TENANT AREA OF THE PROJECT, EXCEPTED ARE REQUIRED LABELS FROM TESTING AGENCIES OR MARKINGS REQUIRED BY CODE OR GOVERNING AUTHORITY.
4. REFER TO A-900 SERIES SHEETS FOR ADDITIONAL FINISHES AND FINISH INSTALLATIONS.
5. PROVIDE ARCHITECTURAL EXPOSED STRUCTURAL STEEL (AESS) FOR ALL EXPOSED STAIR STRUCTURE. SHALL BE GRIND SMOOTH, POLISHED AND PAINTED WITH HIGH PERFORMANCE EPOXY COATING.
6. 2HR FIRE RESISTANT EXTERIOR WALLS ARE REQUIRED AT THE STAIR TOWERS ON PENTHOUSE LEVEL. REFER TO DRAWING A-105 FOR PARTITION TYPE.

100% SUBMITTAL

AECOM

AECOM TECHNICAL SERVICES, INC.
3101 WILSON BOULEVARD
SUITE 900
ARLINGTON, VA 22201

T: 703-682-4900 F: 703.682.4901
www.aecom.com

SEAL AREA

BOARD OF ARCHITECTURE
ERIC D. WEISS
REGISTERED ARCHITECT
STATE OF MARYLAND

KEY PLAN

REV	DATE	DESCRIPTION	S&R BR.	CUSTOMER	PM	SECT. HEAD

	INITIALS	DATE
DRAWN BY	LA/NS	
CHECKED BY	BW/MW	
A-E MANAGER	EW	
ENVIRONMENTAL BRANCH	JH	
SAFETY BRANCH	CS	
CM	MMD	
PM	RWP	
CUSTOMER	JWB	
ENG. BRANCH	DGL	
ARCHITECTURE		

STAIR #1& 2 - ENLARGED PLANS

A-701

FLIGHT PROJECTS BUILDING

NATIONAL AERONAUTICS AND SPACE ADMINISTRATION

GODDARD SPACE FLIGHT CENTER GREENBELT, MARYLAND
FACILITIES MANAGEMENT DIVISION

DATE ISSUED	CoF CODE OR WR#	AECOM PROJECT NO.	SCALE
10/12/2012	12GXAZ	60187636	1/4" = 1'-0"

FILE DATE: 10/11/2012 4:14:17 PM

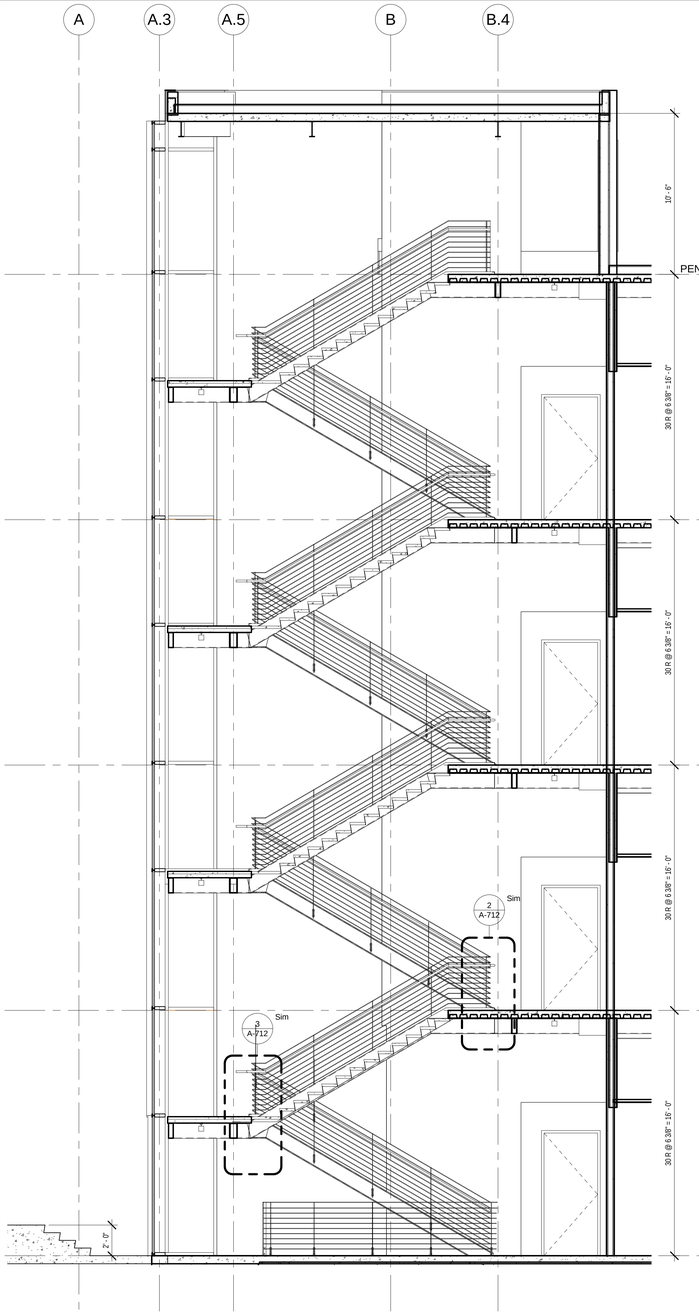

1 STAIR #1 - EAST - WEST SECTION

A-702 REF. A-701 SCALE: 1/4" = 1'-0"

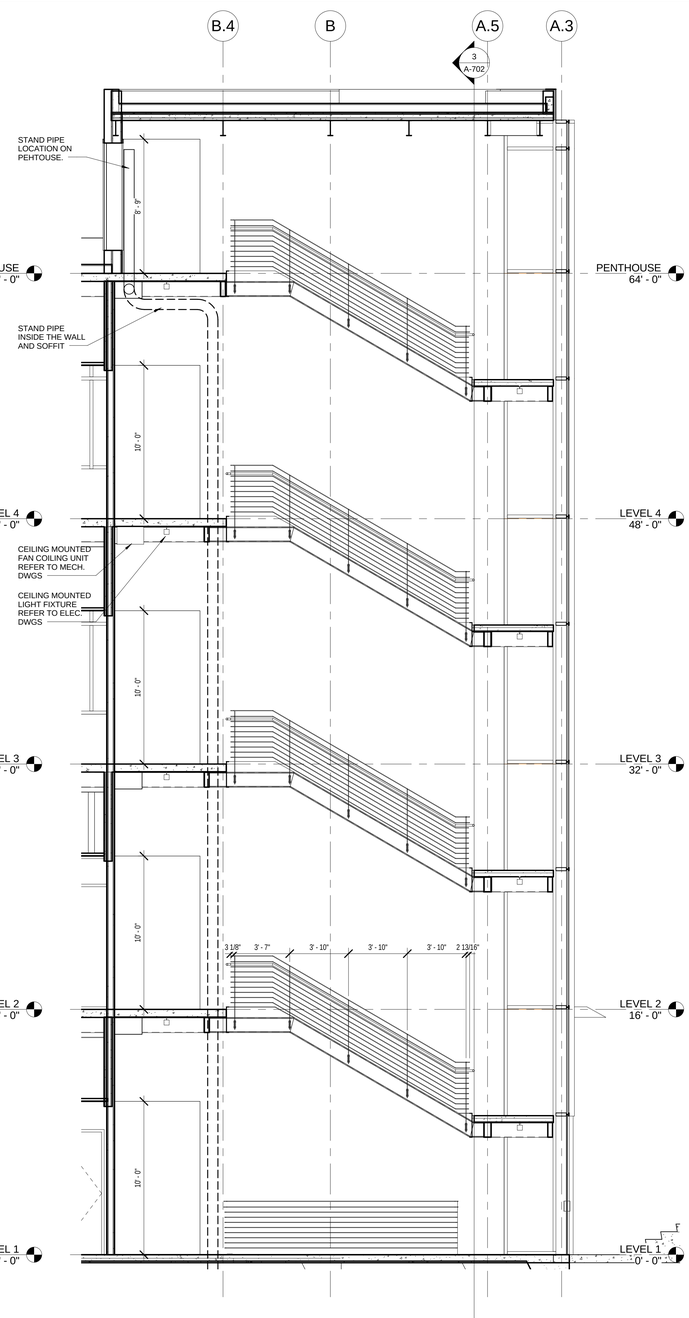

2 STAIR #1 - EAST - WEST SECTION 2

A-702 REF. A-701 SCALE: 1/4" = 1'-0"

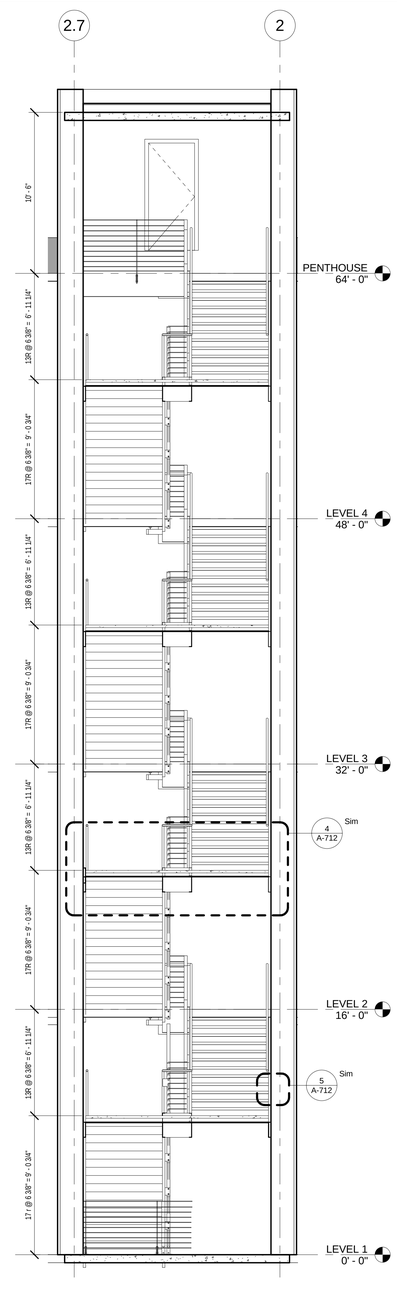

3 STAIR #1 - NORTH - SOUTH SECTION

A-702 REF. A-701 SCALE: 1/4" = 1'-0"

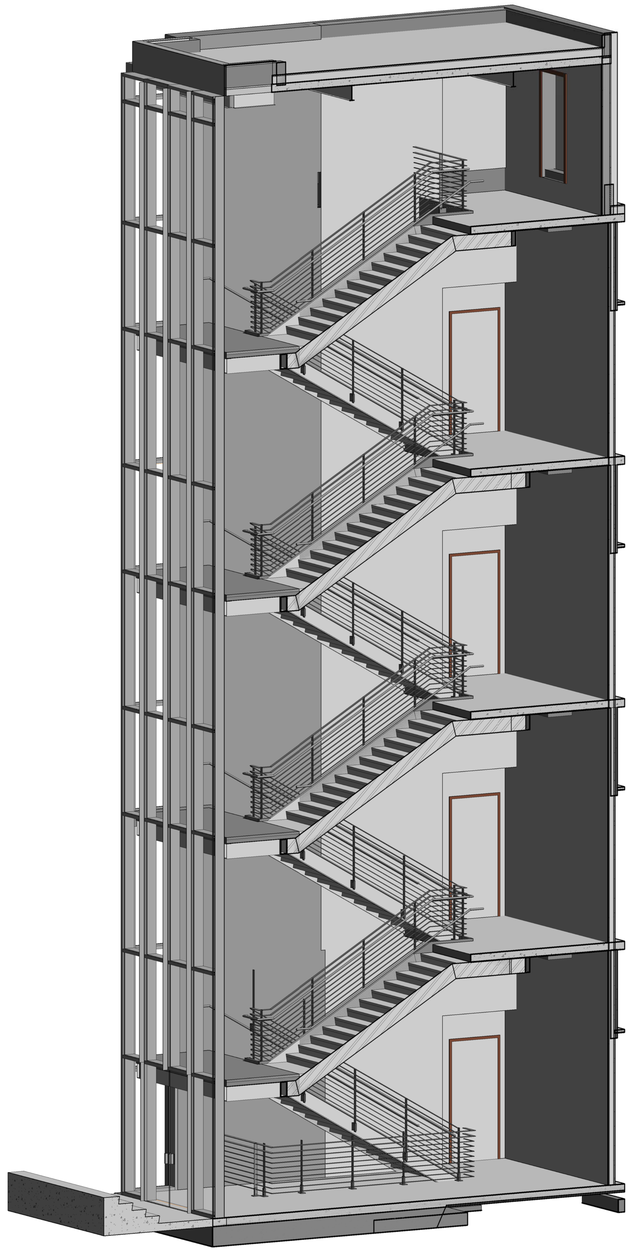

4 STAIR #1 - 3D VIEW

A-702 REF. SCALE:

100% SUBMITTAL

GENERAL STAIR NOTES:

1. ALL WORK SHALL CONFORM TO ALL APPLICABLE CODES, REGULATIONS AND REQUIREMENTS OF ALL GOVERNING AUTHORITIES. REFER TO THE GENERAL NOTES SHEETS FOR APPLICABLE CODES.
2. ALL DIMENSIONS SHALL BE VERIFIED WITH FIELD CONDITIONS. THE G.C. SHALL INFORM THE CLIENT BEFORE PROCEEDING WITH ANY DIMENSIONAL MODIFICATION DUE TO FIELD CONDITIONS.
3. MANUFACTURER'S OR VENDOR'S NAMEPLATE, TRADEMARKS, LOGOS OR OTHER IDENTIFICATIONS SHALL NOT BE VISIBLE WITHIN ANY PUBLIC OR TENANT AREA OF THE PROJECT. EXCEPTED ARE REQUIRED LABELS FROM TESTING AGENCIES OR MARKINGS REQUIRED BY CODE OR GOVERNING AUTHORITY.
4. REFER TO A-900 SERIES SHEETS FOR ADDITIONAL FINISHES AND FINISH INSTALLATIONS.
5. PROVIDE ARCHITECTURAL EXPOSED STRUCTURAL STEEL (AESS) FOR ALL EXPOSED STAIR STRUCTURE. SHALL BE GRIND SMOOTH, POLISHED AND PAINTED WITH HIGH PERFORMANCE EPOXY COATING.
6. 2HR FIRE RESISTANT EXTERIOR WALLS ARE REQUIRED AT THE STAIR TOWERS ON PENTHOUSE LEVEL. REFER TO DRAWING A-105 FOR PARTITION TYPE.

AECOM

AECOM TECHNICAL SERVICES, INC.
3101 WILSON BOULEVARD
SUITE 900
ARLINGTON, VA 22201

T: 703-682-4900 F: 703.682.4901
www.aecom.com

SEAL AREA

BOARD OF ARCHITECTURE 10084 STATE OF MARYLAND

KEY PLAN

REV	DATE	DESCRIPTION	S&R BR.	CUSTOMER	PM	SECT. HEAD

	INITIALS	DATE
DRAWN BY	LA/NS	
CHECKED BY	BW/MW	
A-E MANAGER	EW	
ENVIRONMENTAL BRANCH	JH	
SAFETY BRANCH	CS	
CM	MMD	
PM	RWP	
CUSTOMER	JWB	
ENG. BRANCH	DGL	
ARCHITECTURE		

STAIR #1 - SECTIONS

A-702

FLIGHT PROJECTS BUILDING

NATIONAL AERONAUTICS AND SPACE ADMINISTRATION

GODDARD SPACE FLIGHT CENTER GREENBELT, MARYLAND
FACILITIES MANAGEMENT DIVISION

DATE ISSUED	CoF CODE OR WR#	AECOM PROJECT NO.	SCALE
10/12/2012	12GXAZ	60187636	1/4" = 1'-0"

FILE DATE: 10/11/2012 5:43:21 PM

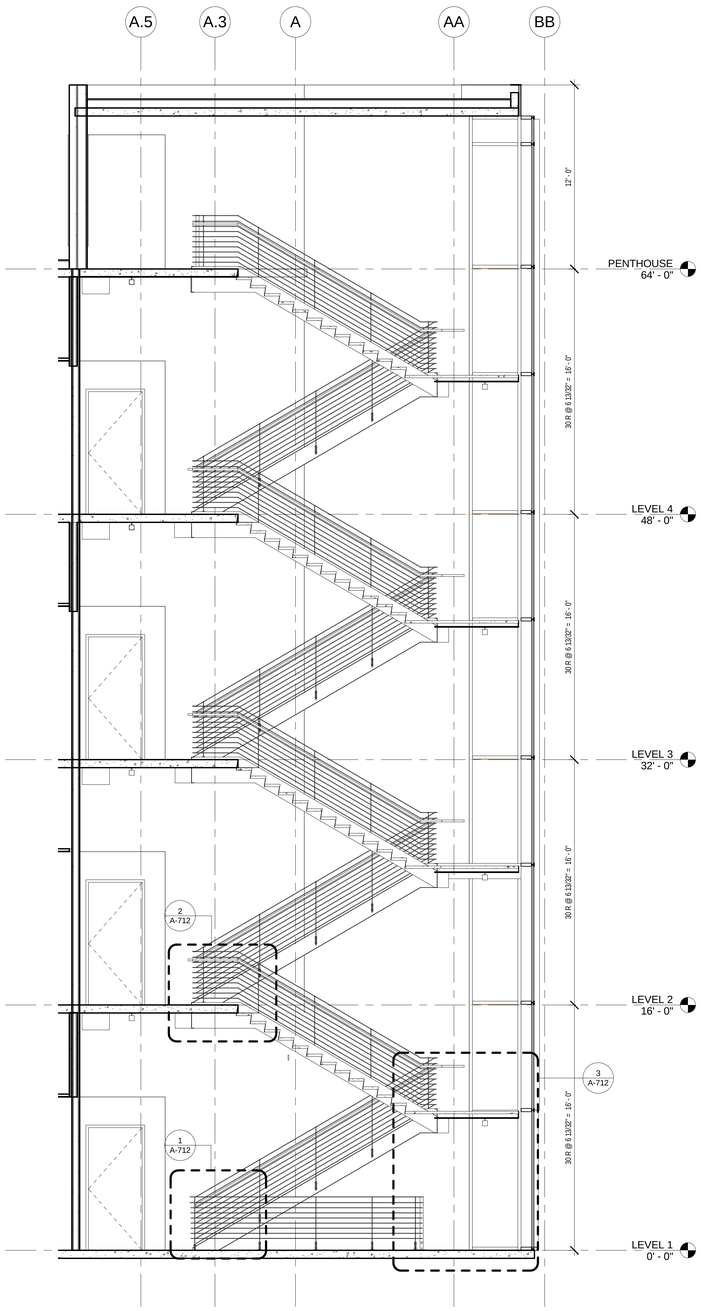

1 STAIR #2 - EAST - WEST SECTION

A-703 REF. A-701 SCALE: 1/4" = 1'-0"

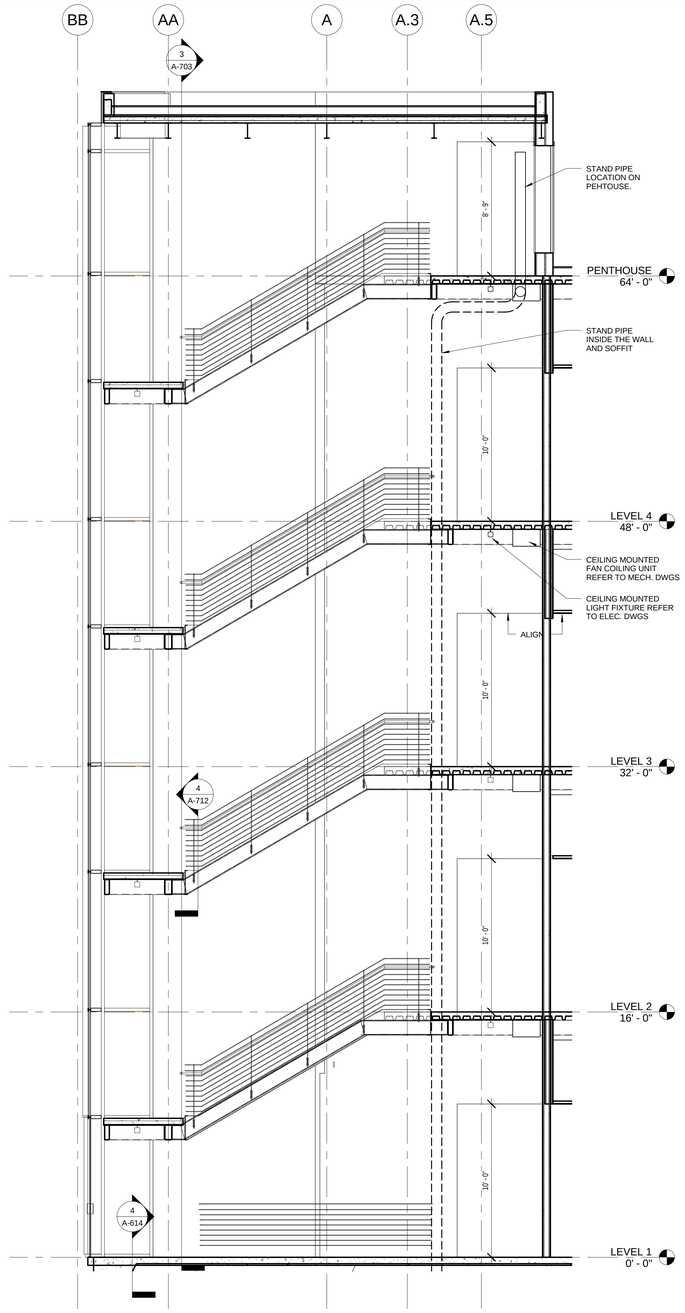

2 STAIR #2 - EAST - WEST SECTION 2

A-703 REF. A-701 SCALE: 1/4" = 1'-0"

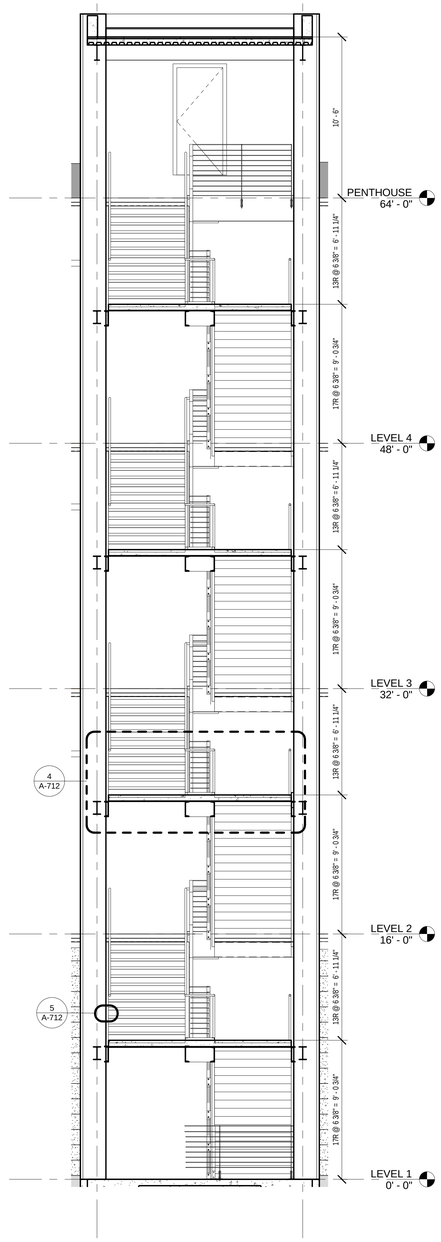

3 STAIR #2 - NORTH - SOUTH SECTION

A-703 REF. A-701 SCALE: 1/4" = 1'-0"

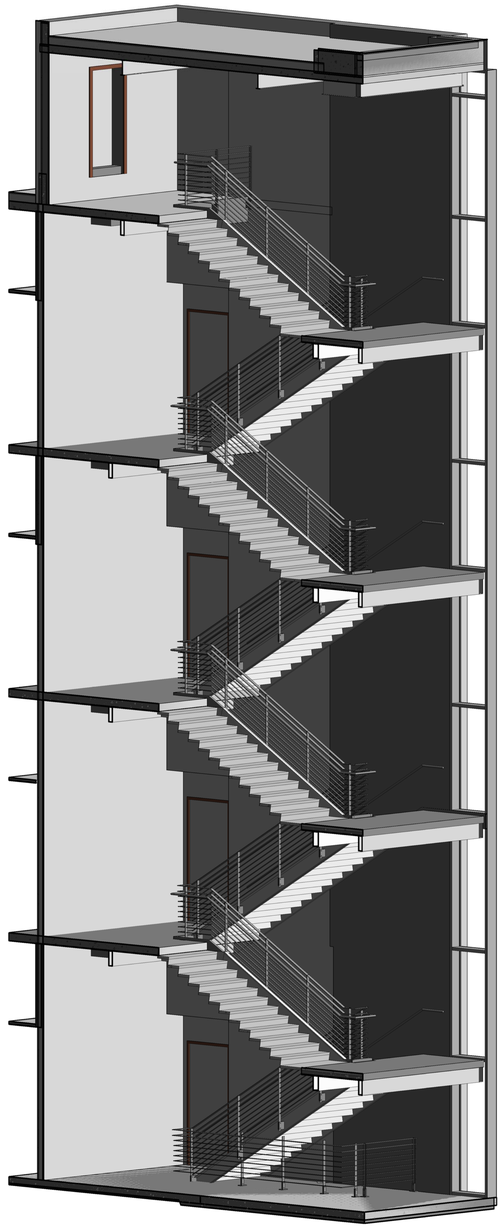

4 STAIR #2 - 3D VIEW

A-703 REF. SCALE:

GENERAL STAIR NOTES:

1. ALL WORK SHALL CONFORM TO ALL APPLICABLE CODES, REGULATIONS AND REQUIREMENTS OF ALL GOVERNING AUTHORITIES. REFER TO THE GENERAL NOTES SHEETS FOR APPLICABLE CODES.
2. ALL DIMENSIONS SHALL BE VERIFIED WITH FIELD CONDITIONS. THE G.C. SHALL INFORM THE CLIENT BEFORE PROCEEDING WITH ANY DIMENSIONAL MODIFICATION DUE TO FIELD CONDITIONS.
3. MANUFACTURER'S OR VENDOR'S NAMEPLATE, TRADEMARKS, LOGOS OR OTHER IDENTIFICATIONS SHALL NOT BE VISIBLE WITHIN ANY PUBLIC OR TENANT AREA OF THE PROJECT. EXCEPTED ARE REQUIRED LABELS FROM TESTING AGENCIES OR MARKINGS REQUIRED BY CODE OR GOVERNING AUTHORITY.
4. REFER TO A-900 SERIES SHEETS FOR ADDITIONAL FINISHES AND FINISH INSTALLATIONS.
5. PROVIDE ARCHITECTURAL EXPOSED STRUCTURAL STEEL (AESS) FOR ALL EXPOSED STAIR STRUCTURE. SHALL BE GRIND SMOOTH, POLISHED AND PAINTED WITH HIGH PERFORMANCE EPOXY COATING.
6. 2HR FIRE RESISTANT EXTERIOR WALLS ARE REQUIRED AT THE STAIR TOWERS ON PENTHOUSE LEVEL. REFER TO DRAWING A-105 FOR PARTITION TYPE.

100% SUBMITTAL

AECOM
AECOM TECHNICAL SERVICES, INC.
3101 WILSON BOULEVARD
SUITE 900
ARLINGTON, VA 22201
T: 703-682-4900 F: 703.682.4901
www.aecom.com

SEAL AREA

BOARD OF ARCHITECTURE 101004 STATE OF MARYLAND

KEY PLAN

REV.	DATE	DESCRIPTION	S&R BR.	CUSTOMER	PM	SECT. HEAD

	INITIALS	DATE
DRAWN BY	LA/NS	
CHECKED BY	BW/MW	
A-E MANAGER	EW	
ENVIRONMENTAL BRANCH	JH	
SAFETY BRANCH	CS	
CM	MMD	
PM	RWP	
CUSTOMER	JWB	
ENG. BRANCH	DGL	

STAIR #2 - SECTIONS

A-703

FLIGHT PROJECTS BUILDING

NATIONAL AERONAUTICS AND SPACE ADMINISTRATION

GODDARD SPACE FLIGHT CENTER GREENBELT, MARYLAND
FACILITIES MANAGEMENT DIVISION

ARCHITECTURE	DATE ISSUED	CoF CODE OR WR#	AECOM PROJECT NO.	SCALE
	10/12/2012	12GXAZ	60187636	1/4" = 1'-0"

FILE DATE: 10/11/2012 5:43:40 PM

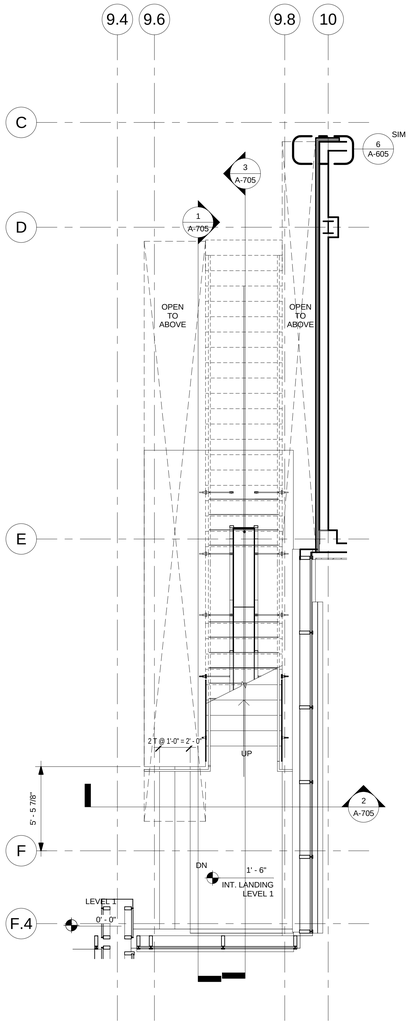

1 STAIR #3 - LEVEL 1

A-704 REF. A-101b SCALE: 1/4" = 1'-0"

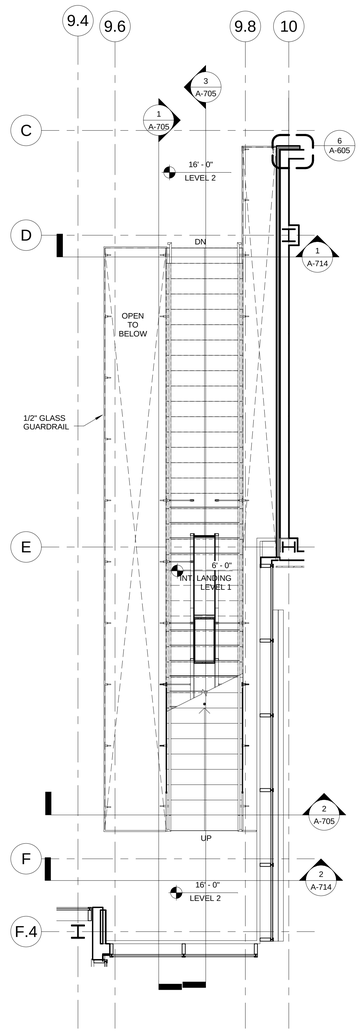

2 STAIR #3 - LEVEL 2

A-704 REF. A-102b SCALE: 1/4" = 1'-0"

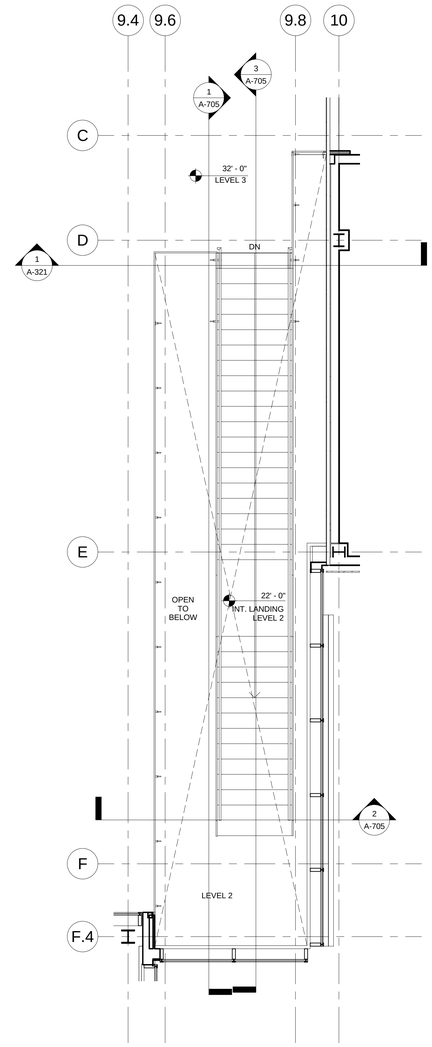

3 STAIR #3 - LEVEL 3

A-704 REF. A-103b SCALE: 1/4" = 1'-0"

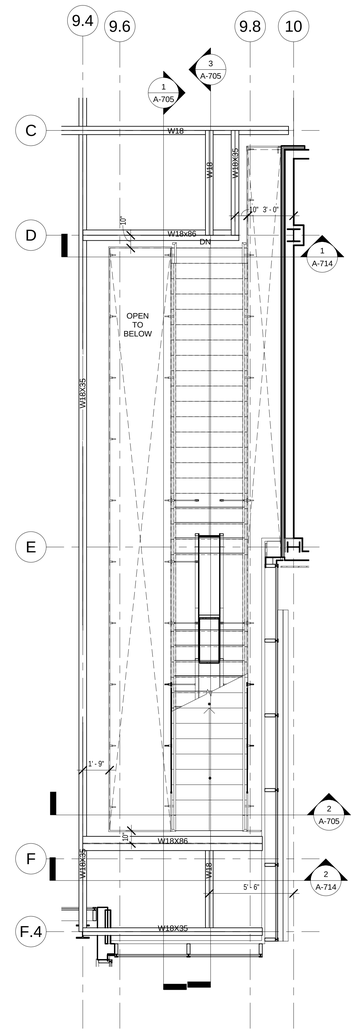

STAIR #3 - LEVEL 2 STRUCTURE LOCATION

4

A-704 REF. A-102b SCALE: 1/4" = 1'-0"

GENERAL STAIR NOTES:

1. ALL WORK SHALL CONFORM TO ALL APPLICABLE CODES, REGULATIONS AND REQUIREMENTS OF ALL GOVERNING AUTHORITIES. REFER TO THE GENERAL NOTES SHEETS FOR APPLICABLE CODES.
2. ALL DIMENSIONS SHALL BE VERIFIED WITH FIELD CONDITIONS. THE G.C. SHALL INFORM THE CLIENT BEFORE PROCEEDING WITH ANY DIMENSIONAL MODIFICATION DUE TO FIELD CONDITIONS.
3. MANUFACTURER'S OR VENDOR'S NAMEPLATE, TRADEMARKS, LOGOS OR OTHER IDENTIFICATIONS SHALL NOT BE VISIBLE WITHIN ANY PUBLIC OR TENANT AREA OF THE PROJECT, EXCEPTED ARE REQUIRED LABELS FROM TESTING AGENCIES OR MARKINGS REQUIRED BY CODE OR GOVERNING AUTHORITY.
4. REFER TO A-900 SERIES SHEETS FOR ADDITIONAL FINISHES AND FINISH INSTALLATIONS.
5. PROVIDE ARCHITECTURAL EXPOSED STRUCTURAL STEEL (AESS) FOR ALL EXPOSED STAIR STRUCTURE. SHALL BE GRIND SMOOTH, POLISHED AND PAINTED WITH HIGH PERFORMANCE EPOXY COATING.
6. 2HR FIRE RESISTANT EXTERIOR WALLS ARE REQUIRED AT THE STAIR TOWERS ON PENTHOUSE LEVEL. REFER TO DRAWING A-105 FOR PARTITION TYPE.

100% SUBMITTAL

AECOM

AECOM TECHNICAL SERVICES, INC.
3101 WILSON BOULEVARD
SUITE 900
ARLINGTON, VA 22201

T: 703-682-4900 F: 703.682.4901
www.aecom.com

SEAL AREA

BOARD OF ARCHITECTS 10004 REGISTERED ARCHITECT STATE OF MARYLAND

KEY PLAN

REV	DATE	DESCRIPTION	S&R BR.	CUSTOMER	PM	SECT. HEAD

	INITIALS	DATE
DRAWN BY	LA/NS	
CHECKED BY	BW/MW	
A-E MANAGER	EW	
ENVIRONMENTAL BRANCH	JH	
SAFETY BRANCH	CS	
CM	MMD	
PM	RWP	
CUSTOMER	JWB	
ENG. BRANCH	DGL	
ARCHITECTURE		

STAIR #3 - ENLARGED PLANS

A-704

FLIGHT PROJECTS BUILDING

NATIONAL AERONAUTICS AND SPACE ADMINISTRATION

GODDARD SPACE FLIGHT CENTER GREENBELT, MARYLAND
FACILITIES MANAGEMENT DIVISION

DATE ISSUED	C of F CODE OR WR#	AECOM PROJECT NO.	SCALE
10/12/2012	12GXAZ	60187636	1/4" = 1'-0"

FILE DATE: 10/11/2012 4:14:29 PM

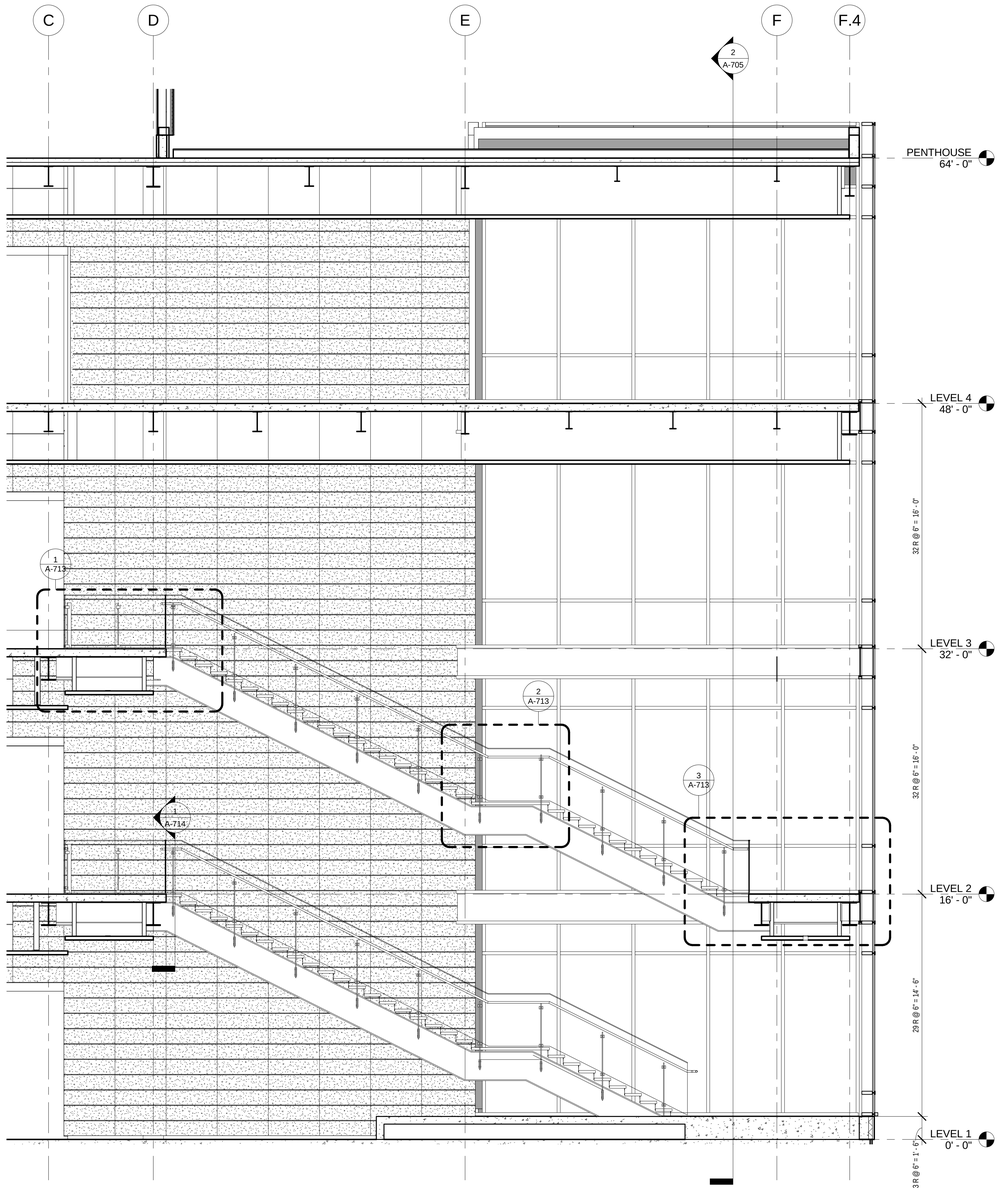

1 STAIR #3 - EAST - WEST SECTION

A-705 REF. A-704 SCALE: 1/4" = 1'-0"

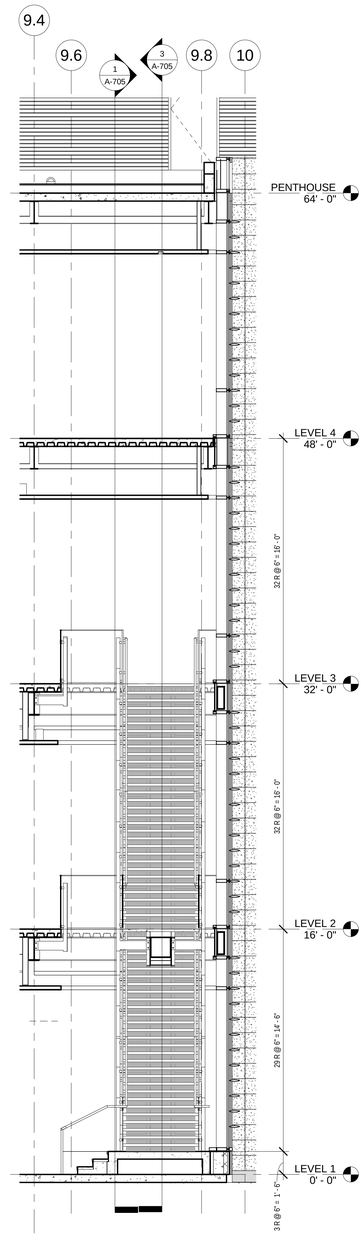

2 STAIR #3 - NORTH - SOUTH SECTION

A-705 REF. A-704 SCALE: 1/4" = 1'-0"

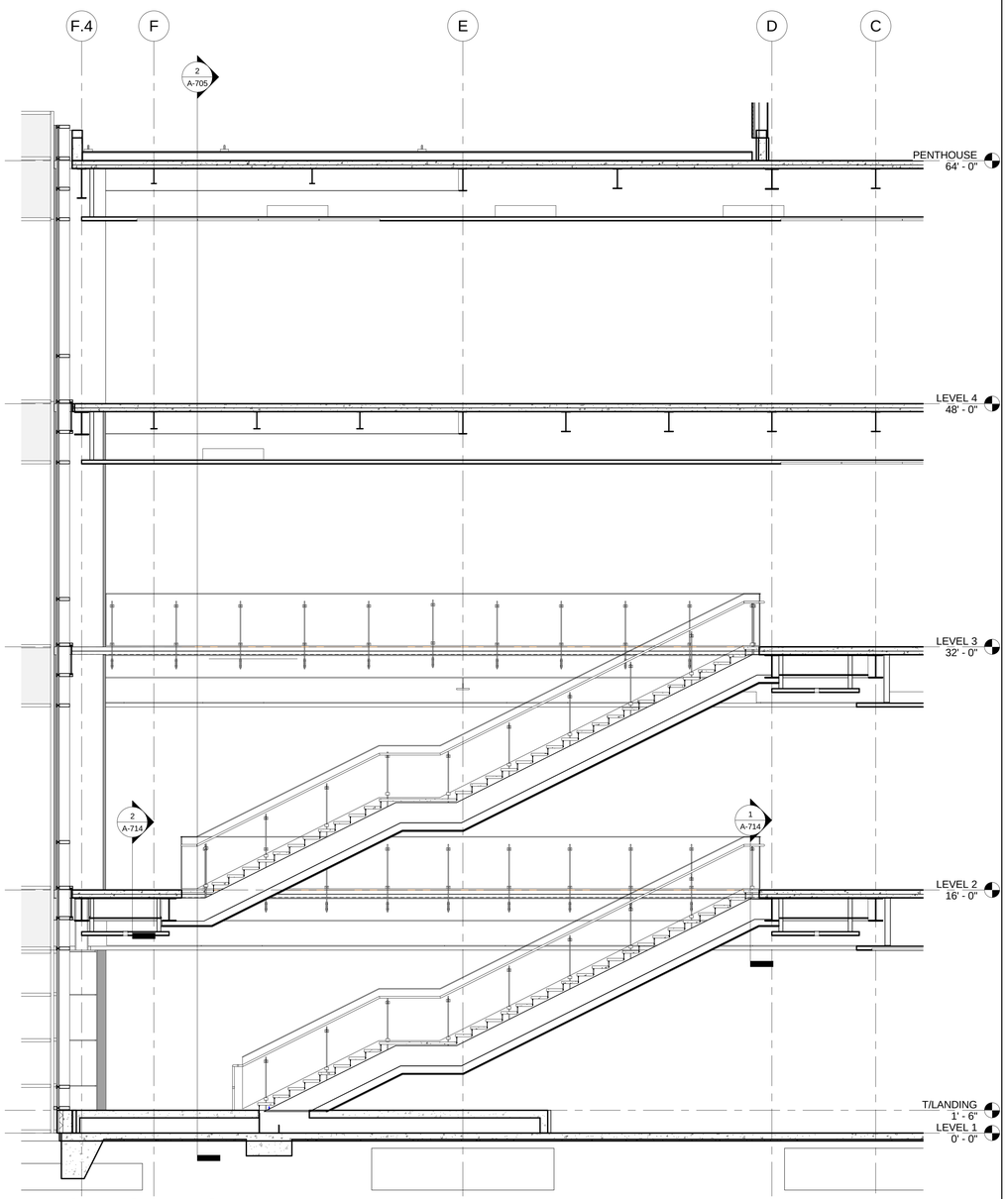

3 STAIR #3 - EAST - WEST SECTION (LOBBY SIDE)

A-705 REF. A-704 SCALE: 1/4" = 1'-0"

100% SUBMITTAL

GENERAL STAIR NOTES:

1. ALL WORK SHALL CONFORM TO ALL APPLICABLE CODES, REGULATIONS AND REQUIREMENTS OF ALL GOVERNING AUTHORITIES. REFER TO THE GENERAL NOTES SHEETS FOR APPLICABLE CODES.
2. ALL DIMENSIONS SHALL BE VERIFIED WITH FIELD CONDITIONS. THE G.C. SHALL INFORM THE CLIENT BEFORE PROCEEDING WITH ANY DIMENSIONAL MODIFICATION DUE TO FIELD CONDITIONS.
3. MANUFACTURER'S OR VENDOR'S NAMEPLATE, TRADEMARKS, LOGOS OR OTHER IDENTIFICATIONS SHALL NOT BE VISIBLE WITHIN ANY PUBLIC OR TENANT AREA OF THE PROJECT. EXCEPTED ARE REQUIRED LABELS FROM TESTING AGENCIES OR MARKINGS REQUIRED BY CODE OR GOVERNING AUTHORITY.
4. REFER TO A-900 SERIES SHEETS FOR ADDITIONAL FINISHES AND FINISH INSTALLATIONS.
5. PROVIDE ARCHITECTURAL EXPOSED STRUCTURAL STEEL (AESS) FOR ALL EXPOSED STAIR STRUCTURE. SHALL BE GRIND SMOOTH, POLISHED AND PAINTED WITH HIGH PERFORMANCE EPOXY COATING.
6. 2HR FIRE RESISTANT EXTERIOR WALLS ARE REQUIRED AT THE STAIR TOWERS ON PENTHOUSE LEVEL. REFER TO DRAWING A-105 FOR PARTITION TYPE.

AECOM

AECOM TECHNICAL SERVICES, INC.
3101 WILSON BOULEVARD
SUITE 900
ARLINGTON, VA 22201

T: 703-682-4900 F: 703.682.4901
www.aecom.com

SEAL AREA

BOARD OF ARCHITECTURE 10084 REGISTERED ARCHITECT STATE OF MARYLAND

KEY PLAN

REV	DATE	DESCRIPTION	S&R BR.	CUSTOMER	PM	SECT. HEAD

	INITIALS	DATE
DRAWN BY	LA/NS	
CHECKED BY	BW/MW	
A-E MANAGER	EW	
ENVIRONMENTAL BRANCH	JH	
SAFETY BRANCH	CS	
CM	MMD	
PM	RWP	
CUSTOMER	JWB	
ENG. BRANCH	DGL	
ARCHITECTURE		

STAIR #3 - SECTIONS

A-705

FLIGHT PROJECTS BUILDING

NATIONAL AERONAUTICS AND SPACE ADMINISTRATION

GODDARD SPACE FLIGHT CENTER GREENBELT, MARYLAND
FACILITIES MANAGEMENT DIVISION

DATE ISSUED	CoF CODE OR WR#	AECOM PROJECT NO.	SCALE
10/12/2012	12GXAZ	60187636	1/4" = 1'-0"

FILE DATE: 10/11/2012 5:43:57 PM

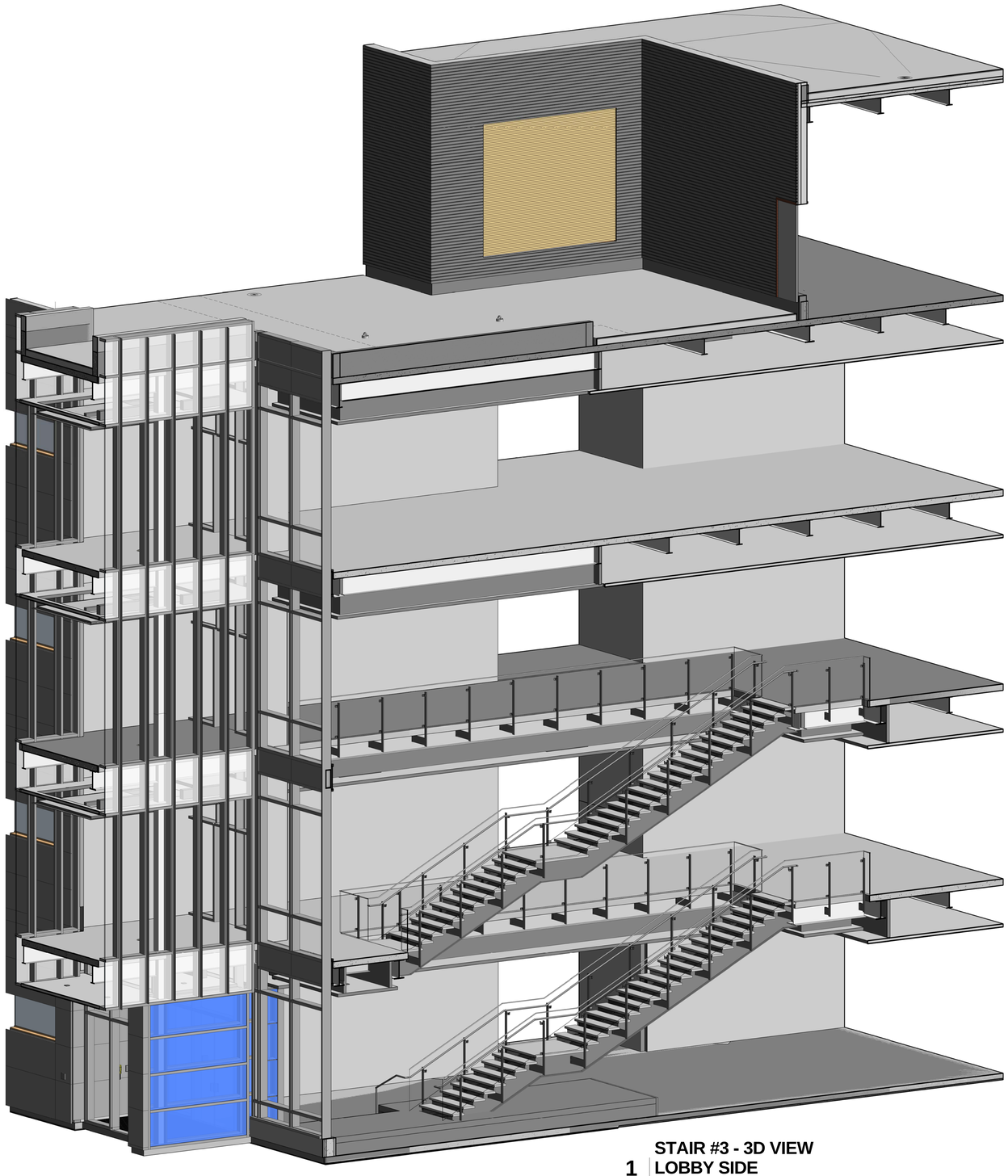

1 **STAIR #3 - 3D VIEW**
LOBBY SIDE

A-706 REF. SCALE:

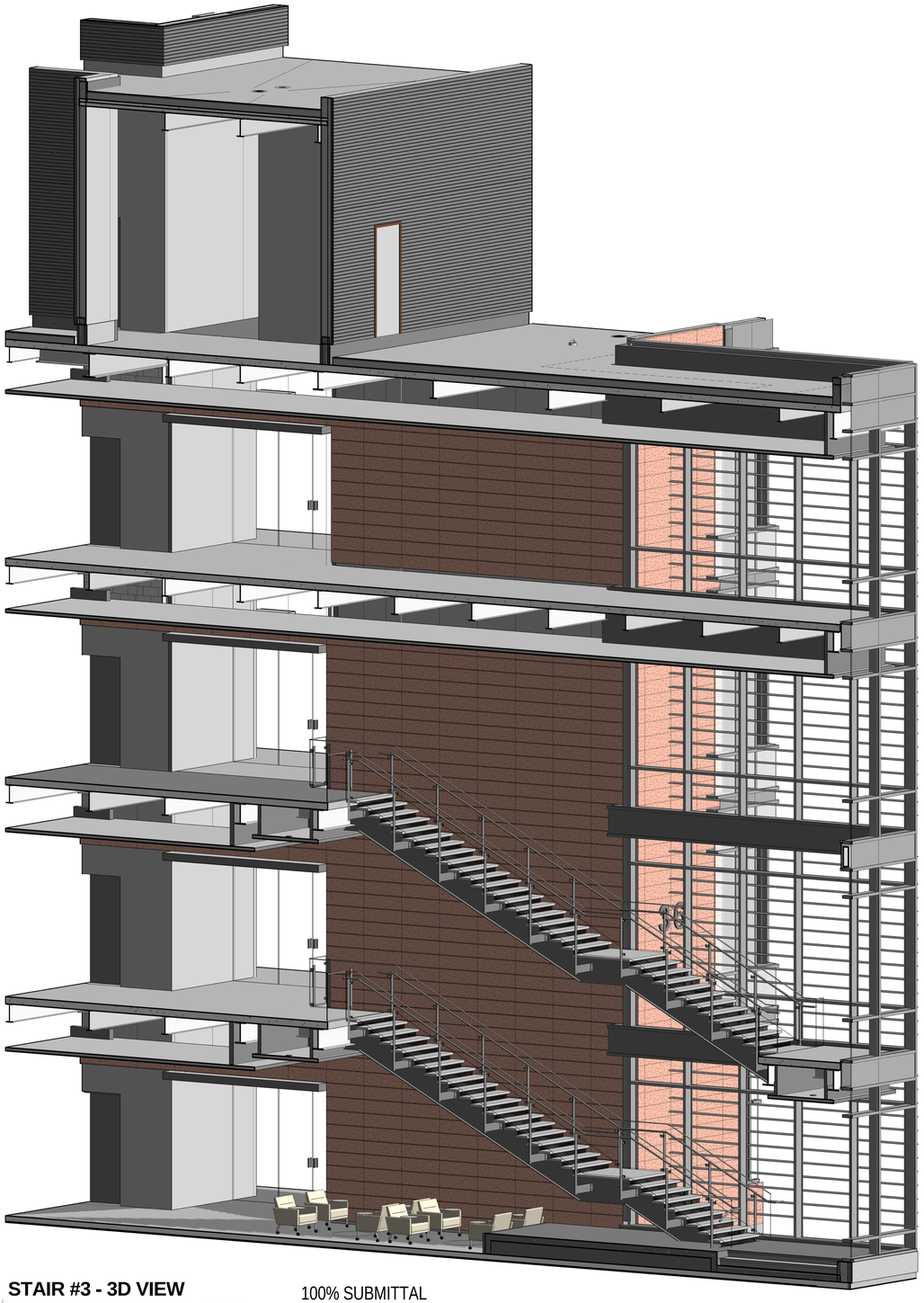

2 **STAIR #3 - 3D VIEW**
TERRACOTTA WALL SIDE

A-706 REF. SCALE:

100% SUBMITTAL

GENERAL STAIR NOTES:

1. ALL WORK SHALL CONFORM TO ALL APPLICABLE CODES, REGULATIONS AND REQUIREMENTS OF ALL GOVERNING AUTHORITIES. REFER TO THE GENERAL NOTES SHEETS FOR APPLICABLE CODES.
2. ALL DIMENSIONS SHALL BE VERIFIED WITH FIELD CONDITIONS. THE G.C. SHALL INFORM THE CLIENT BEFORE PROCEEDING WITH ANY DIMENSIONAL MODIFICATION DUE TO FIELD CONDITIONS.
3. MANUFACTURER'S OR VENDOR'S NAMEPLATE, TRADEMARKS, LOGOS OR OTHER IDENTIFICATIONS SHALL NOT BE VISIBLE WITHIN ANY PUBLIC OR TENANT AREA OF THE PROJECT. EXCEPTED ARE REQUIRED LABELS FROM TESTING AGENCIES OR MARKINGS REQUIRED BY CODE OR GOVERNING AUTHORITY.
4. REFER TO A-900 SERIES SHEETS FOR ADDITIONAL FINISHES AND FINISH INSTALLATIONS.
5. PROVIDE ARCHITECTURAL EXPOSED STRUCTURAL STEEL (AESS) FOR ALL EXPOSED STAIR STRUCTURE. SHALL BE GRIND SMOOTH, POLISHED AND PAINTED WITH HIGH PERFORMANCE EPOXY COATING.
6. 2HR FIRE RESISTANT EXTERIOR WALLS ARE REQUIRED AT THE STAIR TOWERS ON PENTHOUSE LEVEL. REFER TO DRAWING A-105 FOR PARTITION TYPE.

AECOM

AECOM TECHNICAL SERVICES, INC.
3101 WILSON BOULEVARD
SUITE 900
ARLINGTON, VA 22201

T: 703-682-4900 F: 703.682.4901
www.aecom.com

SEAL AREA

BOARD OF ARCHITECTS
EDWARD W. WILSON
101004
STATE OF MARYLAND

KEY PLAN

REV	DATE	DESCRIPTION	S&R BR.	CUSTOMER	PM	SECT. HEAD

	INITIALS	DATE
DRAWN BY	LA/NS	
CHECKED BY	BW/MW	
A-E MANAGER	EW	
ENVIRONMENTAL BRANCH	JH	
SAFETY BRANCH	CS	
CM	MMD	
PM	RWP	
CUSTOMER	JWB	
ENG. BRANCH	DGL	

STAIR #3 - 3D VIEW

A-706

FLIGHT PROJECTS BUILDING

NATIONAL AERONAUTICS AND SPACE ADMINISTRATION

GODDARD SPACE FLIGHT CENTER GREENBELT, MARYLAND
FACILITIES MANAGEMENT DIVISION

DATE ISSUED	CoF CODE OR WR#	AECOM PROJECT NO.	SCALE
10/12/2012	12GXAZ	60187636	

FILE DATE: 10/11/2012 5:44:22 PM

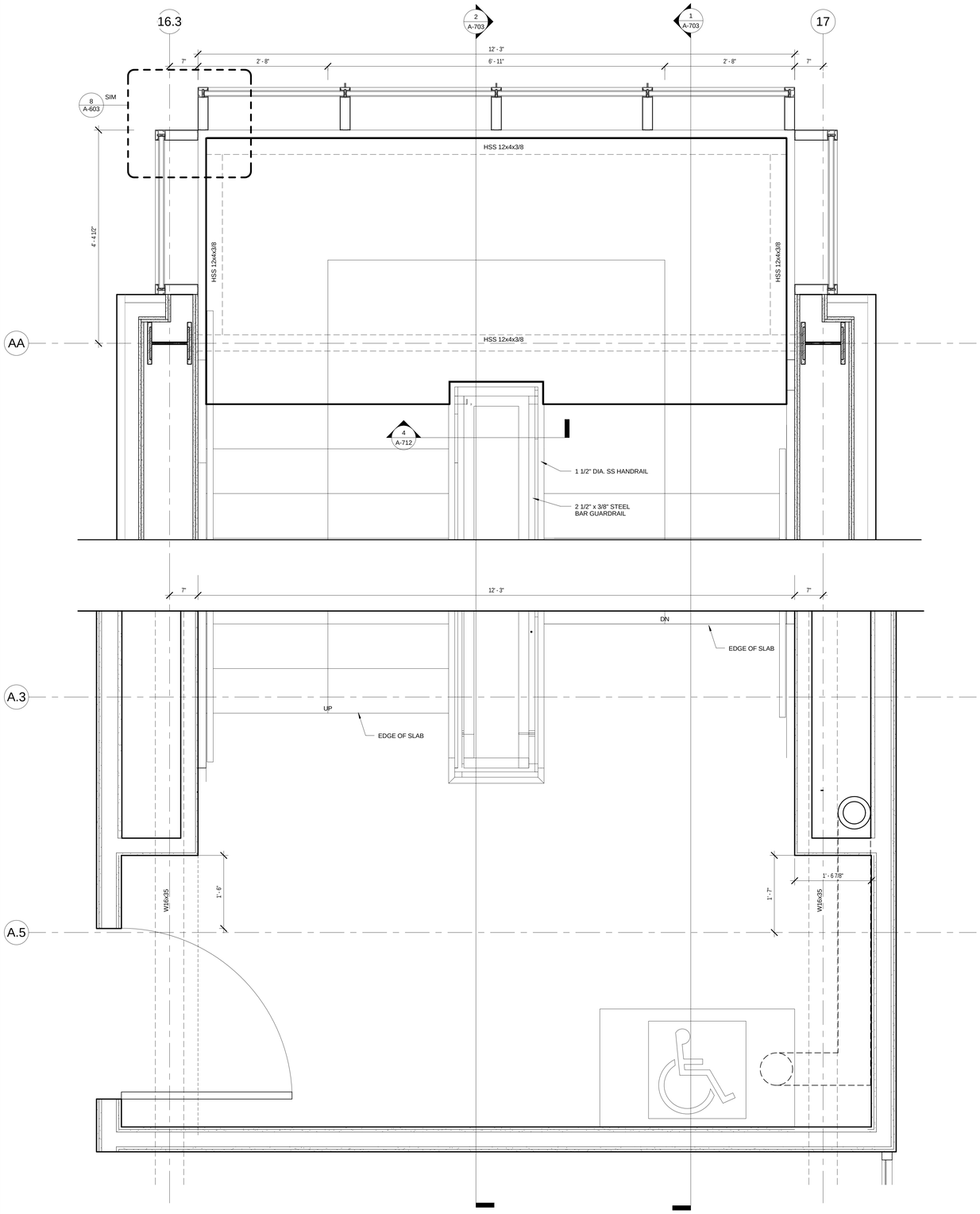

HANDRAIL PLAN @ INTERMEDIATE LANDING (TYP.)

1 A-711 REF. A-701 SCALE: 1" = 1'-0"

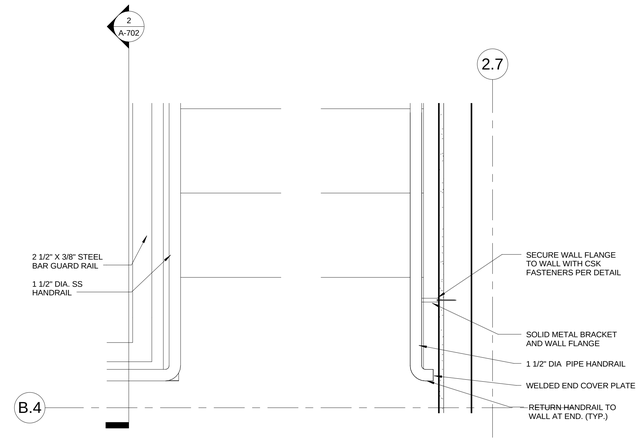

STAIR #1 - HANDRAIL TERMINATION PLAN @ BOTTOM LANDING

2 A-711 REF. A-701 SCALE: 1 1/2" = 1'-0"

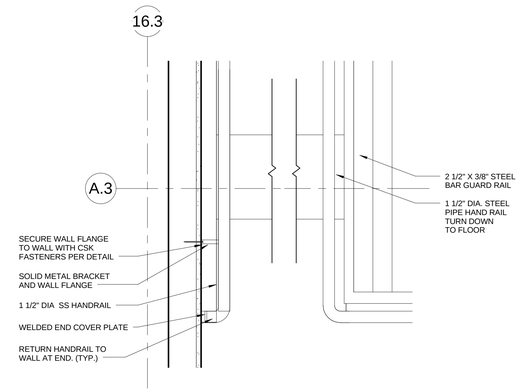

STAIR #2 - HANDRAIL TERMINATION PLAN @ BOTTOM LANDING

3 A-711 REF. A-701 SCALE: 1 1/2" = 1'-0"

GENERAL STAIR NOTES:

1. ALL WORK SHALL CONFORM TO ALL APPLICABLE CODES, REGULATIONS AND REQUIREMENTS OF ALL GOVERNING AUTHORITIES. REFER TO THE GENERAL NOTES SHEETS FOR APPLICABLE CODES.
2. ALL DIMENSIONS SHALL BE VERIFIED WITH FIELD CONDITIONS. THE G.C. SHALL INFORM THE CLIENT BEFORE PROCEEDING WITH ANY DIMENSIONAL MODIFICATION DUE TO FIELD CONDITIONS.
3. MANUFACTURER'S OR VENDOR'S NAMEPLATE, TRADEMARKS, LOGOS OR OTHER IDENTIFICATIONS SHALL NOT BE VISIBLE WITHIN ANY PUBLIC OR TENANT AREA OF THE PROJECT, EXCEPTED ARE REQUIRED LABELS FROM TESTING AGENCIES OR MARKINGS REQUIRED BY CODE OR GOVERNING AUTHORITY.
4. REFER TO A-900 SERIES SHEETS FOR ADDITIONAL FINISHES AND FINISH INSTALLATIONS.
5. PROVIDE ARCHITECTURAL EXPOSED STRUCTURAL STEEL (AESS) FOR ALL EXPOSED STAIR STRUCTURE. SHALL BE GRIND SMOOTH, POLISHED AND PAINTED WITH HIGH PERFORMANCE EPOXY COATING.
6. 2HR FIRE RESISTANT EXTERIOR WALLS ARE REQUIRED AT THE STAIR TOWERS ON PENTHOUSE LEVEL. REFER TO DRAWING A-105 FOR PARTITION TYPE.

100% SUBMITTAL

AECOM
AECOM TECHNICAL SERVICES, INC.
3101 WILSON BOULEVARD
SUITE 900
ARLINGTON, VA 22201
T: 703-682-4900 F: 703.682.4901
www.aecom.com

SEAL AREA

BOARD OF ARCHITECTURE 10084 BRIAN MILWOOD, WILSON STATE OF MARYLAND

KEY PLAN

REV	DATE	DESCRIPTION	S&R BR.	CUSTOMER	PM	SECT. HEAD

	INITIALS	DATE
DRAWN BY	LA/NS	
CHECKED BY	BW/MW	
A-E MANAGER	EW	
ENVIRONMENTAL BRANCH	JH	
SAFETY BRANCH	CS	
CM	MMD	
PM	RWP	
CUSTOMER	JWB	
ENG. BRANCH	DGL	
ARCHITECTURE		

STAIR DETAILS

A-711

FLIGHT PROJECTS BUILDING

NATIONAL AERONAUTICS AND SPACE ADMINISTRATION
GODDARD SPACE FLIGHT CENTER GREENBELT, MARYLAND
FACILITIES MANAGEMENT DIVISION

DATE ISSUED	CoF CODE OR WR#	AECOM PROJECT NO.	SCALE
10/12/2012	12GXAZ	60187636	As indicated

FILE DATE: 10/11/2012 4:14:37 PM

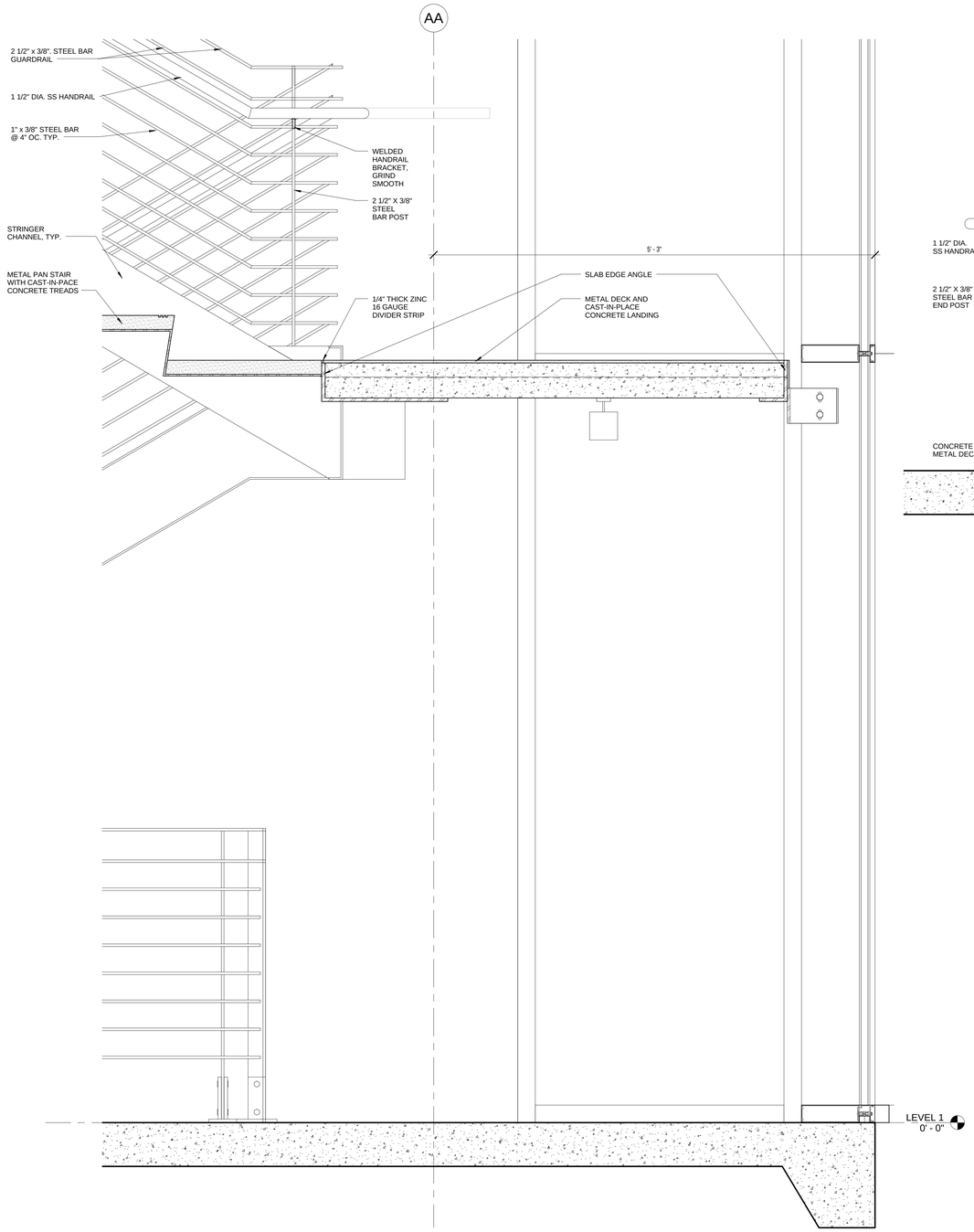

3 STAIR #1 & 2 - INTERMEDIATE LANDING

A-712 REF. A-401 SCALE: 1 1/2" = 1'-0"

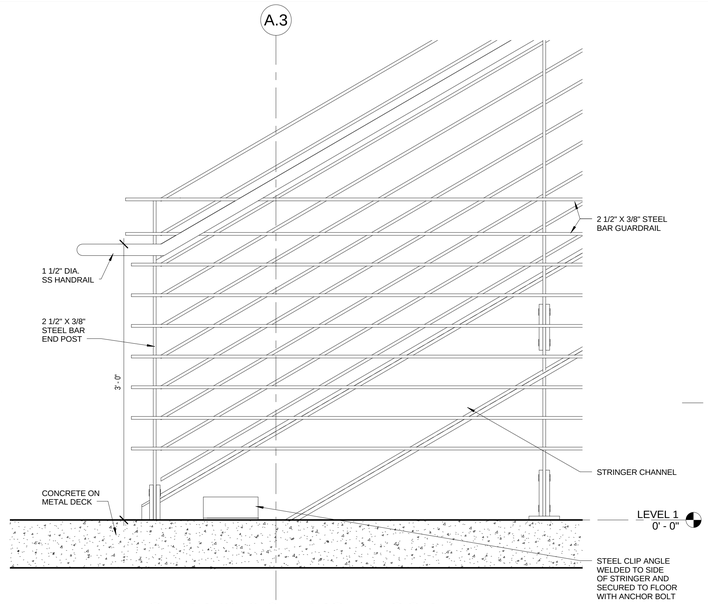

1 STAIR #1 & 2 - FIRST FLOOR LANDING

A-712 REF. A-703 SCALE: 1 1/2" = 1'-0"

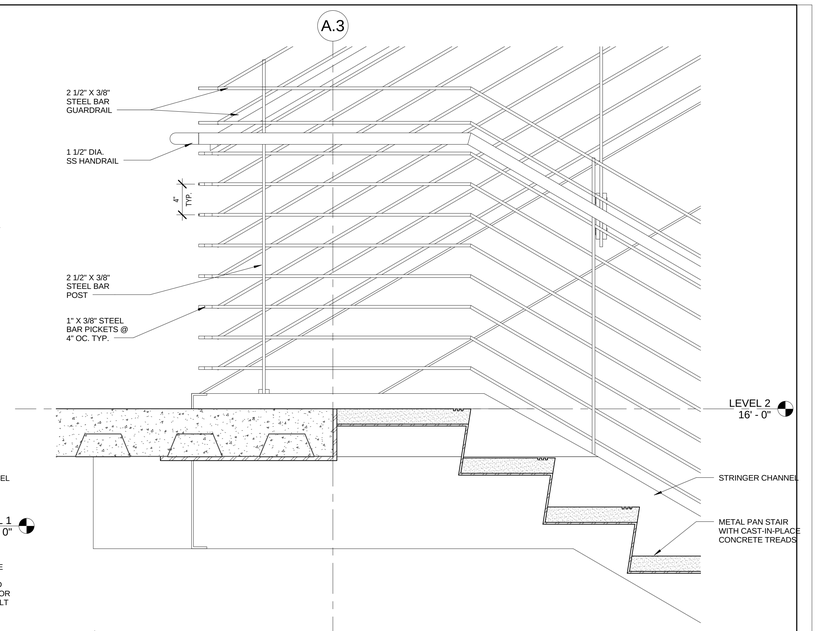

2 STAIR #1 & 2 - LANDING

A-712 REF. A-702 SCALE: 1 1/2" = 1'-0"

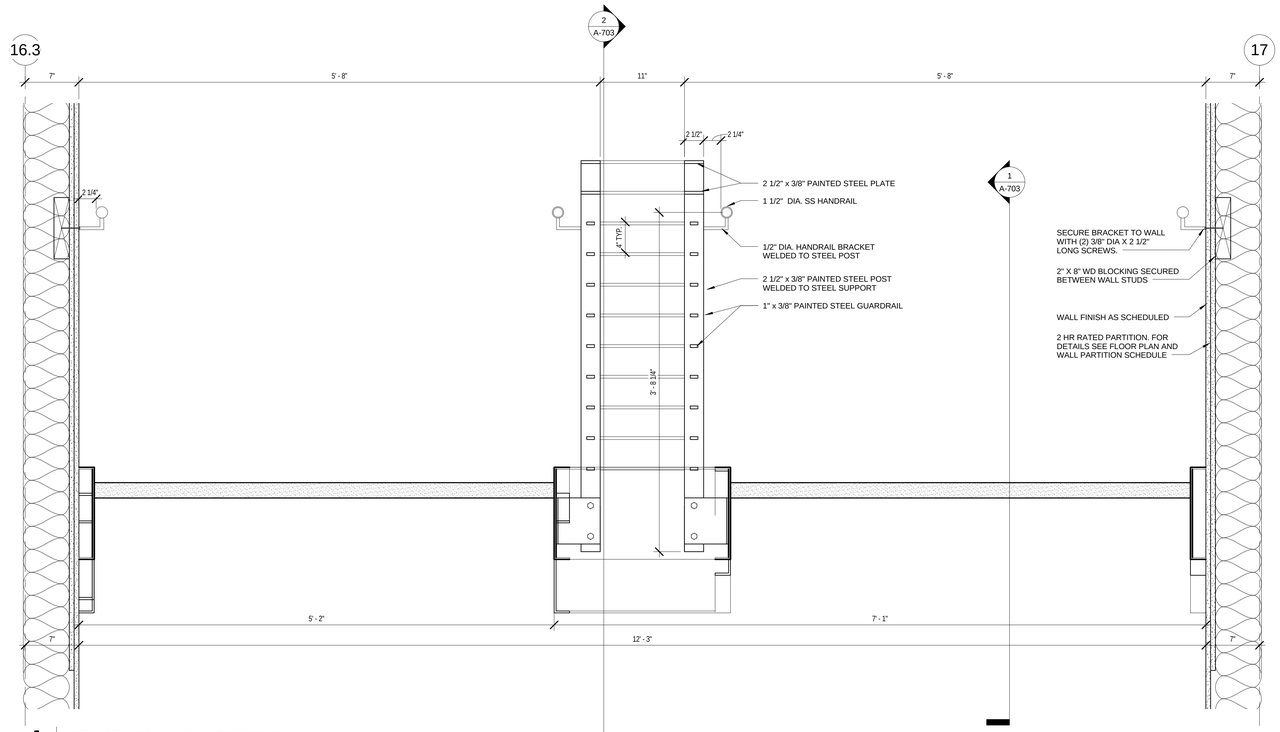

4 STAIR #1 & 2 - DETAIL

A-712 REF. A-702 SCALE: 1 1/2" = 1'-0"

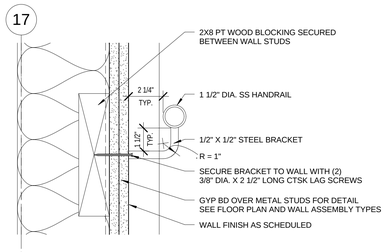

5 HANDRAIL DETAIL @ WALL

A-712 REF. A-702 SCALE: 3" = 1'-0"

GENERAL STAIR NOTES:

1. ALL WORK SHALL CONFORM TO ALL APPLICABLE CODES, REGULATIONS AND REQUIREMENTS OF ALL GOVERNING AUTHORITIES. REFER TO THE GENERAL NOTES SHEETS FOR APPLICABLE CODES.
2. ALL DIMENSIONS SHALL BE VERIFIED WITH FIELD CONDITIONS. THE G.C. SHALL INFORM THE CLIENT BEFORE PROCEEDING WITH ANY DIMENSIONAL MODIFICATION DUE TO FIELD CONDITIONS.
3. MANUFACTURER'S OR VENDOR'S NAMEPLATE, TRADEMARKS, LOGOS OR OTHER IDENTIFICATIONS SHALL NOT BE VISIBLE WITHIN ANY PUBLIC OR TENANT AREA OF THE PROJECT, EXCEPTED ARE REQUIRED LABELS FROM TESTING AGENCIES OR MARKINGS REQUIRED BY CODE OR GOVERNING AUTHORITY.
4. REFER TO A-900 SERIES SHEETS FOR ADDITIONAL FINISHES AND FINISH INSTALLATIONS.
5. PROVIDE ARCHITECTURAL EXPOSED STRUCTURAL STEEL (AESS) FOR ALL EXPOSED STAIR STRUCTURE. SHALL BE GRIND SMOOTH, POLISHED AND PAINTED WITH HIGH PERFORMANCE EPOXY COATING.
6. 2HR FIRE RESISTANT EXTERIOR WALLS ARE REQUIRED AT THE STAIR TOWERS ON PENTHOUSE LEVEL. REFER TO DRAWING A-105 FOR PARTITION TYPE.

100% SUBMITTAL

AECOM
AECOM TECHNICAL SERVICES, INC.
3101 WILSON BOULEVARD
SUITE 900
ARLINGTON, VA 22201
T: 703-682-4900 F: 703.682.4901
www.aecom.com

SEAL AREA

BOARD OF ARCHITECTS 10984 ERIC M. WEIER STATE OF MARYLAND

KEY PLAN

REV	DATE	DESCRIPTION	S&R BR.	CUSTOMER	PM	SECT. HEAD

	INITIALS	DATE
DRAWN BY	LA/NS	
CHECKED BY	BW/MW	
A-E MANAGER	EW	
ENVIRONMENTAL BRANCH	JH	
SAFETY BRANCH	CS	
CM	MMD	
PM	RWP	
CUSTOMER	JWB	
ENG. BRANCH	DGL	
ARCHITECTURE		

STAIR DETAILS

A-712

FLIGHT PROJECTS BUILDING

NATIONAL AERONAUTICS AND SPACE ADMINISTRATION

GODDARD SPACE FLIGHT CENTER GREENBELT, MARYLAND
FACILITIES MANAGEMENT DIVISION

DATE ISSUED	CoF CODE OR WR#	AECOM PROJECT NO.	SCALE
10/12/2012	12GXAZ	60187636	As indicated

FILE DATE: 10/11/2012 5:44:31 PM

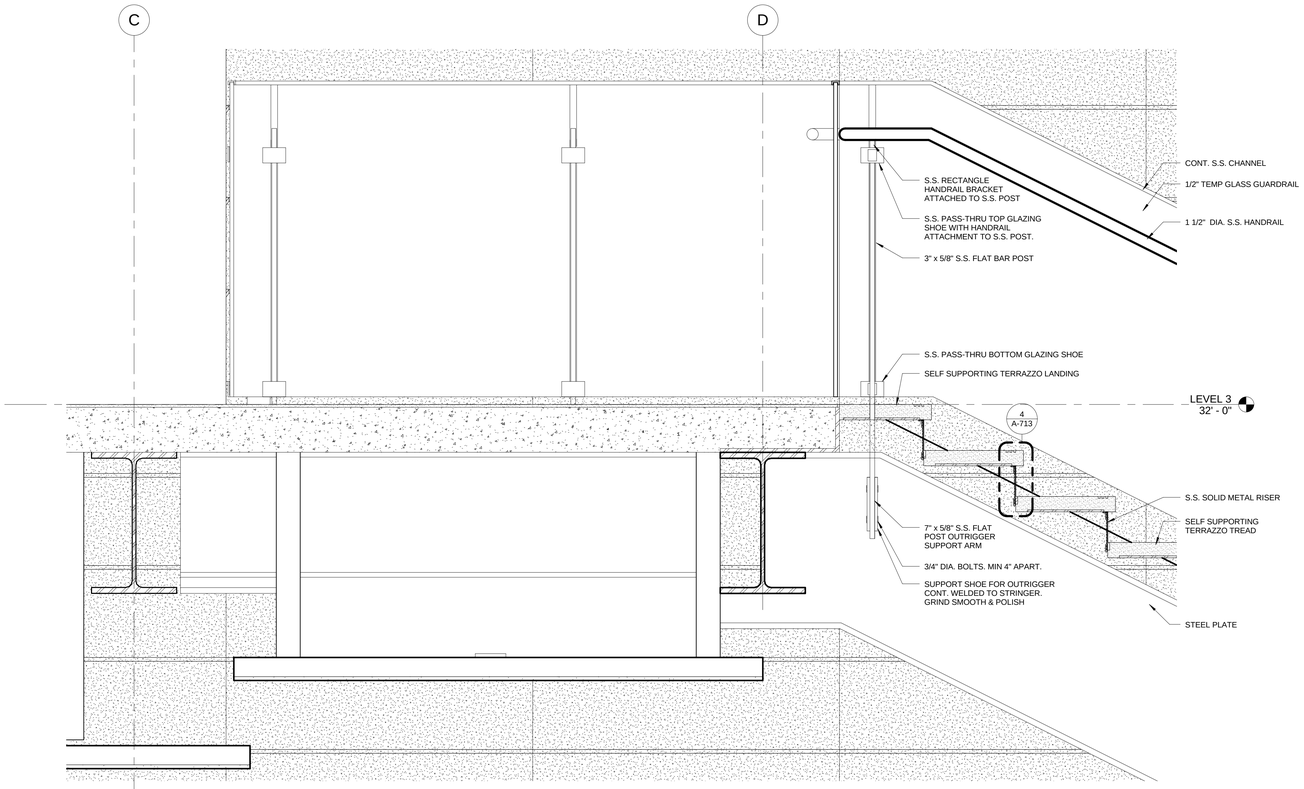

1 STAIR #3 - TOP LANDING

A-713 REF. A-705 SCALE: 1 1/2" = 1'-0"

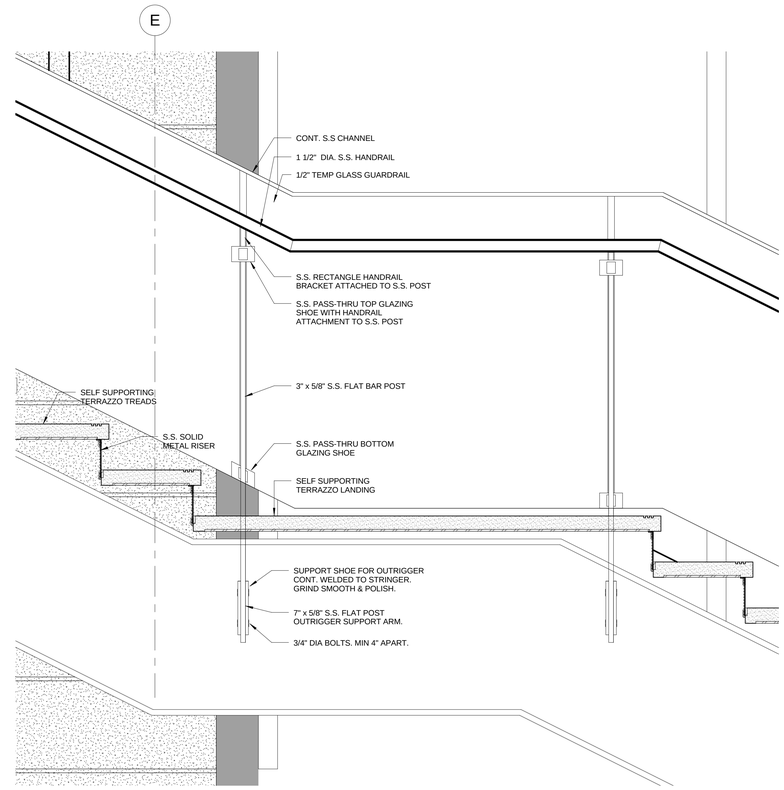

2 STAIR #3 - INTERMEDIATE LANDING

A-713 REF. A-705 SCALE: 1 1/2" = 1'-0"

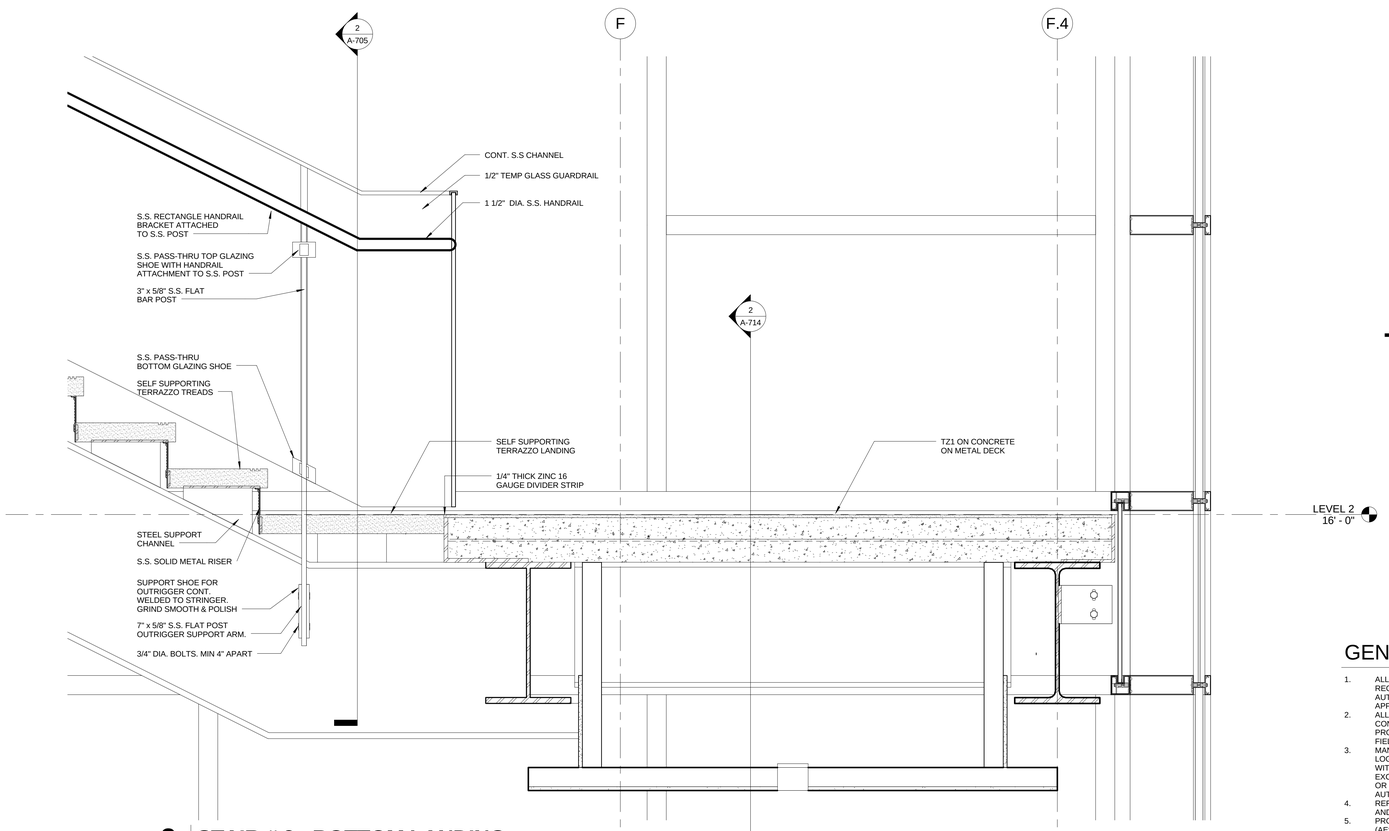

3 STAIR # 3 - BOTTOM LANDING

A-713 REF. A-705 SCALE: 1 1/2" = 1'-0"

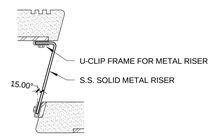

4 STAIR #3 - DETAIL @ SOLID METAL RISER

A-713 REF. A-713 SCALE: 3" = 1'-0"

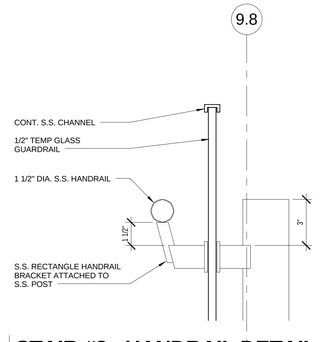

5 STAIR #3 - HANDRAIL DETAIL

A-713 REF. A-714 SCALE: 3" = 1'-0"

GENERAL STAIR NOTES:

1. ALL WORK SHALL CONFORM TO ALL APPLICABLE CODES, REGULATIONS AND REQUIREMENTS OF ALL GOVERNING AUTHORITIES. REFER TO THE GENERAL NOTES SHEETS FOR APPLICABLE CODES.
2. ALL DIMENSIONS SHALL BE VERIFIED WITH FIELD CONDITIONS. THE G.C. SHALL INFORM THE CLIENT BEFORE PROCEEDING WITH ANY DIMENSIONAL MODIFICATION DUE TO FIELD CONDITIONS.
3. MANUFACTURER'S OR VENDOR'S NAMEPLATE, TRADEMARKS, LOGOS OR OTHER IDENTIFICATIONS SHALL NOT BE VISIBLE WITHIN ANY PUBLIC OR TENANT AREA OF THE PROJECT. EXCEPTED ARE REQUIRED LABELS FROM TESTING AGENCIES OR MARKINGS REQUIRED BY CODE OR GOVERNING AUTHORITY.
4. REFER TO A-900 SERIES SHEETS FOR ADDITIONAL FINISHES AND FINISH INSTALLATIONS.
5. PROVIDE ARCHITECTURAL EXPOSED STRUCTURAL STEEL (AESS) FOR ALL EXPOSED STAIR STRUCTURE. SHALL BE GRIND SMOOTH, POLISHED AND PAINTED WITH HIGH PERFORMANCE EPOXY COATING.
6. 2HR FIRE RESISTANT EXTERIOR WALLS ARE REQUIRED AT THE STAIR TOWERS ON PENTHOUSE LEVEL. REFER TO DRAWING A-105 FOR PARTITION TYPE.

100% SUBMITTAL

AECOM
AECOM TECHNICAL SERVICES, INC.
3101 WILSON BOULEVARD
SUITE 900
ARLINGTON, VA 22201
T: 703-682-4900 F: 703.682.4901
www.aecom.com

SEAL AREA

BOARD OF ARCHITECTS 103594 COMMONWEALTH OF MARYLAND

KEY PLAN

REV	DATE	DESCRIPTION	S&R BR.	CUSTOMER	PM	SECT. HEAD

	INITIALS	DATE
DRAWN BY	LA/NS	
CHECKED BY	BW/MW	
A-E MANAGER	EW	
ENVIRONMENTAL BRANCH	JH	
SAFETY BRANCH	CS	
CM	MMD	
PM	RWP	
CUSTOMER	JWB	
ENG. BRANCH	DGL	
ARCHITECTURE		

STAIR DETAILS

A-713

FLIGHT PROJECTS BUILDING

NATIONAL AERONAUTICS AND SPACE ADMINISTRATION

GODDARD SPACE FLIGHT CENTER GREENBELT, MARYLAND
FACILITIES MANAGEMENT DIVISION

DATE ISSUED	CoF CODE OR WR#	AECOM PROJECT NO.	SCALE
10/12/2012	120XAZ	60187636	As indicated

FILE DATE: 10/11/2012 5:44:43 PM

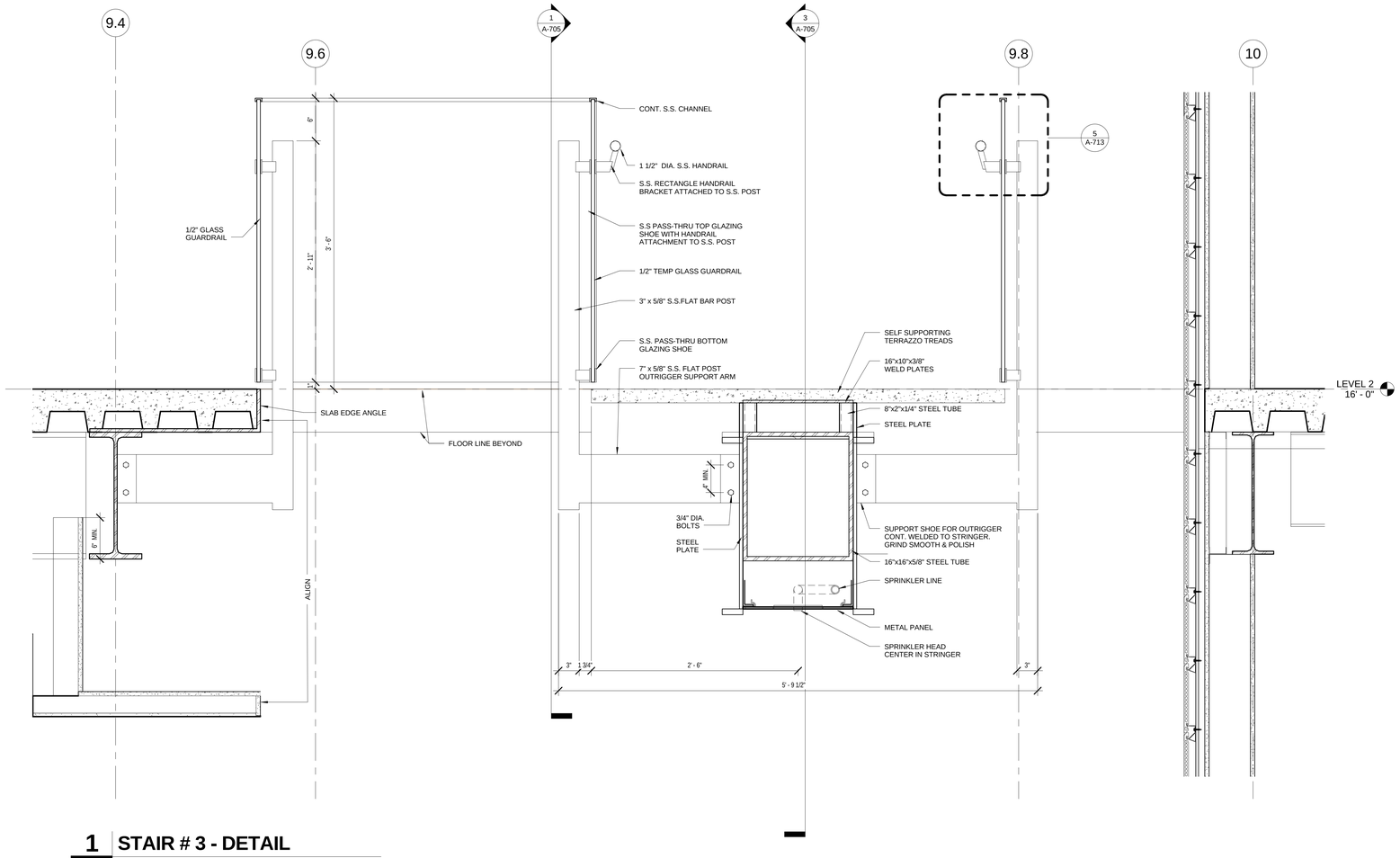

1 STAIR # 3 - DETAIL

A-714 REF. A-704 SCALE: 1 1/2" = 1'-0"

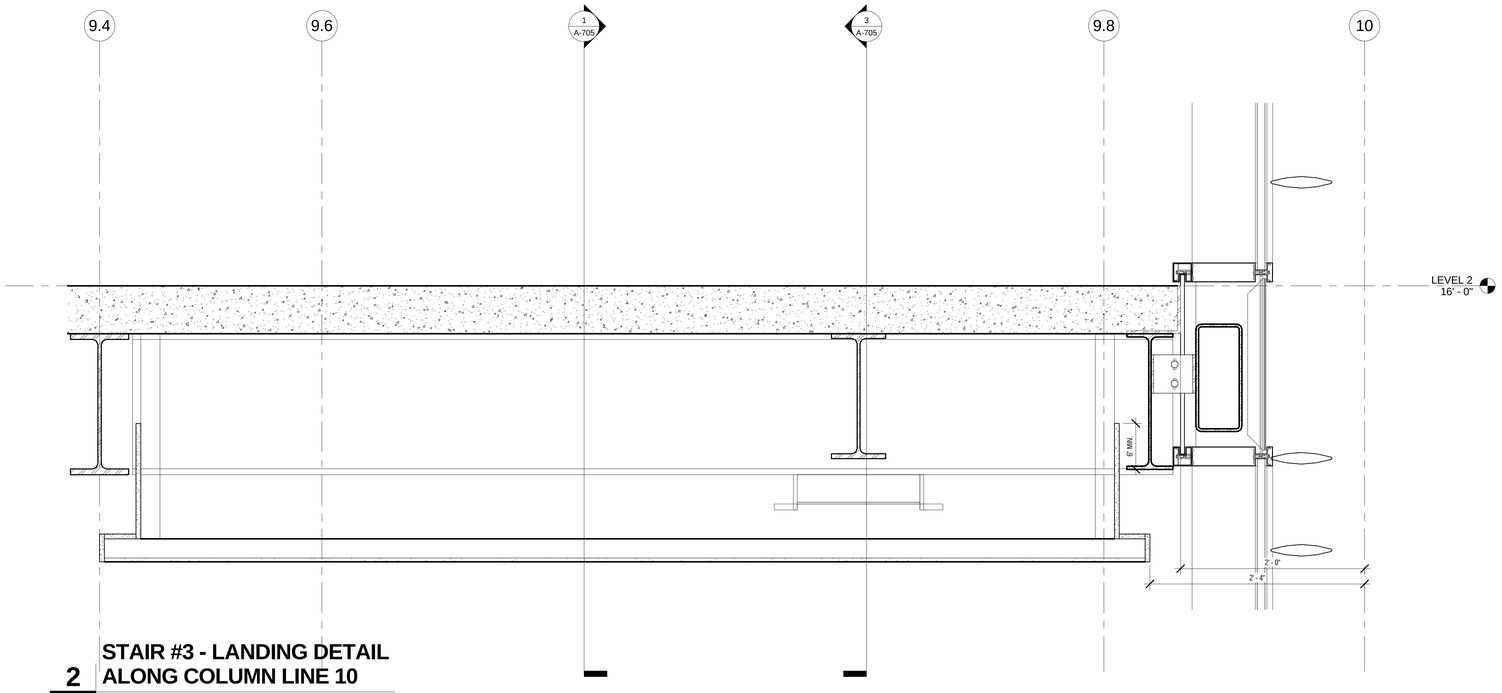

2 STAIR #3 - LANDING DETAIL ALONG COLUMN LINE 10

A-714 REF. A-704 SCALE: 1 1/2" = 1'-0"

GENERAL STAIR NOTES:

1. ALL WORK SHALL CONFORM TO ALL APPLICABLE CODES, REGULATIONS AND REQUIREMENTS OF ALL GOVERNING AUTHORITIES. REFER TO THE GENERAL NOTES SHEETS FOR APPLICABLE CODES.
2. ALL DIMENSIONS SHALL BE VERIFIED WITH FIELD CONDITIONS. THE G.C. SHALL INFORM THE CLIENT BEFORE PROCEEDING WITH ANY DIMENSIONAL MODIFICATION DUE TO FIELD CONDITIONS.
3. MANUFACTURER'S OR VENDOR'S NAMEPLATE, TRADEMARKS, LOGOS OR OTHER IDENTIFICATIONS SHALL NOT BE VISIBLE WITHIN ANY PUBLIC OR TENANT AREA OF THE PROJECT, EXCEPTED ARE REQUIRED LABELS FROM TESTING AGENCIES OR MARKINGS REQUIRED BY CODE OR GOVERNING AUTHORITY.
4. REFER TO A-900 SERIES SHEETS FOR ADDITIONAL FINISHES AND FINISH INSTALLATIONS.
5. PROVIDE ARCHITECTURAL EXPOSED STRUCTURAL STEEL (AESS) FOR ALL EXPOSED STAIR STRUCTURE. SHALL BE GRIND SMOOTH, POLISHED AND PAINTED WITH HIGH PERFORMANCE EPOXY COATING.
6. 2HR FIRE RESISTANT EXTERIOR WALLS ARE REQUIRED AT THE STAIR TOWERS ON PENTHOUSE LEVEL. REFER TO DRAWING A-105 FOR PARTITION TYPE.

100% SUBMITTAL

AECOM
AECOM TECHNICAL SERVICES, INC.
3101 WILSON BOULEVARD
SUITE 900
ARLINGTON, VA 22201
T: 703-682-4900 F: 703.682.4901
www.aecom.com

SEAL AREA

BOARD OF ARCHITECTURE 10084 2012 BRIAN W. WEBB STATE OF MARYLAND

KEY PLAN

REV.	DATE	DESCRIPTION	S&R BR.	CUSTOMER	PM	SECT. HEAD

	INITIALS	DATE
DRAWN BY	LA/NS	
CHECKED BY	BW/MW	
A-E MANAGER	EW	
ENVIRONMENTAL BRANCH	JH	
SAFETY BRANCH	CS	
CM	MMD	
PM	RWP	
CUSTOMER	JWB	
ENG. BRANCH	DGL	

STAIR DETAILS

A-714

FLIGHT PROJECTS BUILDING

NATIONAL AERONAUTICS AND SPACE ADMINISTRATION

GODDARD SPACE FLIGHT CENTER GREENBELT, MARYLAND
FACILITIES MANAGEMENT DIVISION

DATE ISSUED	CoF CODE OR WR#	AECOM PROJECT NO.	SCALE
10/12/2012	12GXAZ	60187636	1 1/2" = 1'-0"

FILE DATE: 10/11/2012 4:14:45 PM

VT01 GENERAL ELEVATOR INFORMATION
VT02 PLANS ELEVATORS 1 & 2
VT03 HOISTWAY SECTIONS ELEVATORS 1 & 2

1 VT01 INDEX OF DRAWINGS
SCALE: NTS

ELEVATORS 1 & 2 4000# @ 350 FPM

2 VT01 SUMMARY OF ELEVATORS
SCALE: NTS

AFF	ABOVE FINISH FLOOR	DIM.	DIMENSION	HP	HORSEPOWER	O.A.	OVERALL
A.P.	ACCESS PANEL	DC	DIRECT CURRENT	HYDR.	HYDRAULIC	OPP.	OPPOSITE
A/C	AIR CONDITIONING	DISC.	DISCONNECT	IN.	INCH (INCHES)	OVHD	OVERHEAD
ALT.	ALTERNATE	DBG	DISTANCE BETWEEN	IGBT	INSULATED GATE	PL	PLATE
AC	ALTERNATING CURRENT		GUIDE RAILS		BIPOLAR TRANSDUCER	PLTFM	PLATFORM
ASME	AMERICAN SOCIETY OF	DN	DOWN	J/S	JOULES PER SECOND	#	POUNDS
	MECHANICAL ENGINEERS	DWG	DRAWING	KCAL	KILOCALORIE	PSI	POUNDS PER
AMP	AMPERE	EA.	EACH	KG	KILOGRAMS		SQUARE INCH
APPROX.	APPROXIMATE	ELEC.	ELECTRICAL	KN	KILONEWTONS	PRELIM.	PRELIMINARY
ARCH.	ARCHITECTURAL	EL.	ELEVATION	KVA	KILOVOLT-AMPERE	RAD.	RADIUS
AUX.	AUXILIARY	ELEV.	ELEVATOR	KW	KILOWATTS	R/O	REAR OPENING
BSMT	BASEMENT	ETS	EMERGENCY TERMINAL	K	KIPS	REQ.	REQUIRED
BOT.	BOTTOM		SLOWDOWN	LT	LIGHT	REV.	REVISION
BTUH	BRITISH THERMAL UNITS	EQ.	EQUAL	MPS	METERS PER SECOND	RM	ROOM
	PER HOUR	EQUIP.	EQUIPMENT	MACH.	MACHINE	R.O.	ROUGH OPENING
BM	BEAM	ESCL.	ESCALATOR	MRL	MACHINE-ROOM-LESS	SEC.	SECONDARY
BOCA	BUILDING OFFICIALS AND	(E)	EXISTING	MAX.	MAXIMUM	SECT.	SECTION
	CODE ADMINISTRATION	°F	FAHRENHEIT	MEZZ.	MEZZANINE	SHT	SHEET
CLG	CEILING	FPM	FEET PER MINUTE	M	METER	SCR	SILICON CONTROLLED
°C	CELSIUS	F.V.	FIELD VERIFY	MM	MILLIMETERS		RECTIFIER
℄	CENTERLINE	F.F.	FINISH FLOOR	MIN.	MINIMUM	SIM.	SIMILAR
CM	CENTIMETERS	FLR	FLOOR	MISC.	MISCELLANEOUS	SPEC.	SPECIFICATION
COL.	COLUMN	FT	FOOT (FEET)	MG	MOTOR-GENERATOR	SF	SQUARE FEET
CLR	CLEAR	FLUOR.	FLUORESCENT	MTD	MOUNTED	SM	SQUARE METERS
CONC.	CONCRETE	F/O	FRONT OPENING	NEC	NATIONAL ELECTRICAL	STD	STANDARD
CMU	CONCRETE MASONRY	FUT.	FUTURE		CODE	SBC	STANDARD BUILDING CODE
	UNITS	G	GRAVITY	NFPA	NATIONAL FIRE	STL	STEEL
CONT.	CONTINUOUS	GFCI	GROUND FAULT CIRCUIT		PROTECTION	STRUCT.	STRUCTURAL
CONTR.	CONTRACTOR		INTERRUPTER		ASSOCIATION	SW.	SWITCH
COORD	COORDINATE	GOV.	GOVERNOR	(N)	NEW	TBD	TO BE DETERMINED
CNTRL	CONTROLLER	GA.	GUAGE	NOM.	NOMINAL	T.O.	TOP OF
CWT	COUNTERWEIGHT	GYP. BD.	GYPSUM BOARD	N/A	NOT APPLICABLE	(TYP)	TYPICAL
CYL.	CYLINDER	HT	HEIGHT	(NIEC)	NOT IN ELEVATOR	UNO	UNLESS NOTED OTHERWISE
DEH	DEAD END HITCH	HZ	HERTZ		CONTRACT	UBC	UNIFORM BUILDING CODE
D.	DEEP	H.	HIGH	NTS	NOT TO SCALE	VERT.	VERTICAL
°	DEGREES	HSTWY	HOISTWAY	NO.	NUMBER	V.	VOLT
DTL	DETAIL	HORIZ.	HORIZONTAL	O.C.	ON CENTER	W.	WIDE
□	DIAMETER	HR	HOUR	OPNG	OPENING	W/	WITH
						WP	WORKPOINT

3 VT01 ABBREVIATIONS
SCALE: NTS

1. THESE DRAWINGS FOR GENERAL INFORMATION ONLY. REQUIREMENTS OF INDIVIDUAL VENDORS MAY VARY.
2. THESE DRAWINGS TO BE DISTRIBUTED TO APPROPRIATE CONSULTING AND ENGINEERING FIRMS, INCLUDING ARCHITECT, STRUCTURAL, ELECTRICAL AND MECHANICAL ENGINEERS.
3. FIELD VERIFY ALL EXISTING DIMENSIONS.
4. ROUGH OPENING DIMENSIONS FOR ELEVATOR ENTRANCES APPLY ONLY IN THE CASE OF MASONRY OR CONCRETE CONSTRUCTION.
5. VERTICAL STRUCTURAL SUPPORT FOR RAIL BRACKETING IS PROVIDED BY HOISTWAY WALLS IN THE CASE OF REINFORCED CONCRETE HOISTWAY CONSTRUCTION.

4 VT01 GENERAL NOTES
SCALE: NTS

POWER FEEDER REQUIREMENTS
(MAIN POWER SUPPLY: 480-3-60 ASSUMED)

ELEVATOR NUMBER	CAPACITY (POUNDS)	SPEED (FPM)	TRACTION DRIVE HP RATING	HYDRO MOTOR HP	HYDRO STARTING AMPS			FULL LOAD AMPS		HEAT RELEASE	
					LOCKED ROTOR	SOLID STATE	WYE DELTA	RUNNING	ACCELERATING	MACHINE SPACE BTUH PER CAR	CONTROLLER SPACE BTUH PER CAR
1 & 2	4000	350	50	N/A	N/A	N/A	N/A	75	145	23,700	

NOTES:

1. ELECTRIC POWER AND CURRENT ARE BASED ON THREE (3) PHASE A.C. POWER SUPPLY.
2. MAIN POWER TO BE PROVIDED AT EACH CONTROLLER THROUGH DISCONNECTING MEANS MEETING NEC REQUIREMENTS.
3. MAIN POWER SUPPLY FEEDERS TO LIMIT VOLTAGE DROP TO LESS THAN 5%.
4. USE COPPER CONDUCTORS ONLY.
5. FEEDER DEMAND FACTORS (NEC SECTION 430-26 AND 620-14)= (2) CARS= 95% (3) CARS= 90% (4) CARS= 85% (5) CARS= 82% (6) CARS= 79% (7) CARS= 77% (8) CARS= 75% (9) CARS= 73% (10) CARS= 72%
6. MACHINE SPACE TEMPERATURE TO BE MIN. 13° C (55° F.) (10° C /50° F. IN MASS.), MAX. 32° C (90° F). TO BE MEASURED 1838 MM (6'-0") ABOVE FINISH FLOOR AT APPROX. CENTER OF ROOM.
7. RELATIVE HUMIDITY MAX. 80% NON-CONDENSING.
8. THE SELECTION OF MAIN POWER SUPPLY DISCONNECTING MEANS OVERCURRENT PROTECTION TO BE SIZED IN ACCORDANCE WITH THE NATIONAL ELECTRIC CODE, SECTIONS 620-51 AND 430-52.
9. PROVIDE LOCAL TELEPHONE SERVICE LINE TO EACH CAR CONTROLLER (IF APPLICABLE).
10. PROVIDE GFCI CONVENIENCE OUTLETS PIT, MACHINE ROOM AND MACHINERY SPACES. IN PIT, PROVIDE ONE NON-GFCI OUTLET FOR SUMP PUMP AND/OR OIL RETURN PUMP.
11. PROVIDE HOIST MACHINE WITH VOLTAGE TO MATCH SUPPLY VOLTAGE INDICATED, U.N.O.

ADDITIONAL POWER AND DISCONNECT REQUIREMENTS IN MACHINE ROOM

AUXILIARY SYSTEM	SUPPLY TERMINAL	SUPPLY VOLTAGE	CIRCUIT CAPACITY
CAR LIGHT AND FAN WITH LOCKABLE DISCONNECT	EACH CONTROLLER	120-1-60	(25 AMP PER CAR)
INTERCOM SYSTEM (IF APPLICABLE)	AT AMPLIFIER	120-1-60	1800 WATTS (15 AMP MIN)
AIR CONDITIONING AND HEATING SOURCE (IF APPLICABLE)	EACH CONTROLLER	120-1-60	(20 AMP PER CAR)
CONDENSATE EVAPORATOR UNIT FOR AIR CONDITIONING (IF APPLICABLE)	EACH CONTROLLER	120-1-60	(30 AMP PER CAR)
ROPE BRAKE AIR COMPRESSOR (IF APPLICABLE)	AT EACH BRAKE UNIT	120-1-60	(20 AMP PER CAR)

5 VT01 ELEVATOR ELECTRICAL AND MECHANICAL REQUIREMENTS
SCALE: NTS

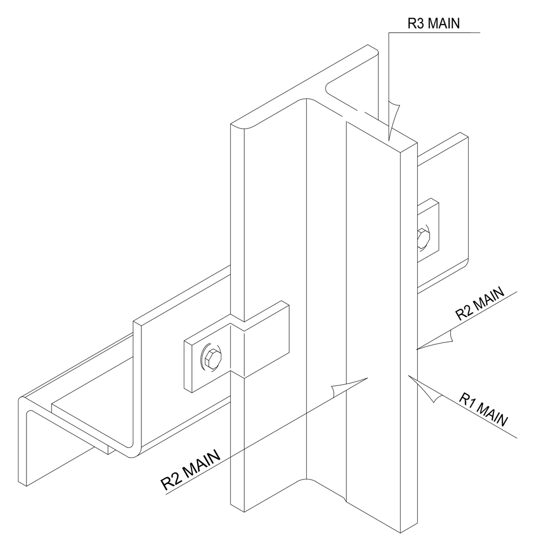

RAIL FORCES MAXIMUM ON EACH GUIDE RAIL
(FORCES ARE IN KIPS)

	ELEVATOR NUMBER	1 & 2	OCCURRING ON
NORMAL FORCES	R1	1.3	CAR NORMAL FACE OF MAIN RAIL
	R2	0.8	CAR NORMAL SIDE OF MAIN RAIL - LOADING OR RUNNING
	CAR R3	27.5	FORCE TRANSMITTED TO PIT STRUCTURE AT CAR SAFETY APPLICATION*
	CWT R3	N/A	FORCE TRANSMITTED TO PIT STRUCTURE AT CWT SAFETY APPLICATION*

ASME A17.1

BUILDING SUPPORTS TO RESIST HORIZONTAL FORCES WITH A TOTAL DEFLECTION AT POINT OF SUPPORT NOT IN EXCESS OF 3MM (1/8") DURING NORMAL CONDITIONS.

* THESE REACTIONS DO NOT OCCUR SIMULTANEOUSLY WITH PIT BUFFER REACTIONS

A17.1/UBC VARIABLES USED FOR SEISMIC CALCULATIONS:
SEISMIC ZONE = 0 OR 1 (NON-SEISMIC FOR ELEVATORS)

IBC

IBC VARIABLES USED FOR SEISMIC CALCULATIONS:
SEISMIC DESIGN CATEGORY = B (NON-SEISMIC FOR ELEVATORS)

6 VT01 RAIL FORCES
SCALE: NTS

LEGAL HOISTWAY AND PIT

1. HOISTWAY CLEAR, PLUMB, SUBSTANTIALLY FLUSH WITH VARIATIONS NOT TO EXCEED 25 MM (1") WITHIN 30 M (100') VERTICALLY AT ANY POINT.
2. BEVEL CANTS NOT LESS THAN 75° FROM THE HORIZONTAL ON ANY REAR OR SIDE WALL LEDGES AND BEAMS, INCLUDING BUILDING SUPPORT FOR TRACTION MACHINE BEAMS, THAT PROJECT OR RECESS 100 MM (4") OR MORE INTO THE HOISTWAY PER ASME A17.1 2000+ CODE. CANTS NOT REQUIRED ON DIVIDER BEAMS. ENCLOSE WEB OF HOISTWAY STEEL FRAMING.
3. GUIDE RAIL SUPPORT, ADEQUATE STRUCTURAL SUPPORT FOR ATTACHMENT OF ELEVATOR CAR AND/OR COUNTERWEIGHT GUIDE RAILS AT EACH FLOOR, PIT AND OVERHEAD.
4. DIVIDER BEAMS BETWEEN ADJACENT ELEVATORS AT EACH FLOOR, PIT AND OVERHEAD. DIVIDER BEAMS NEED NOT BE FIREPROOFED.
5. SUPPORTS AT EACH FLOOR FOR CAR AND CWT GUIDE RAIL FASTENING, AND INTERMEDIATE SUPPORTS WHERE FLOOR HEIGHTS EXCEED SPACING REQUIREMENTS SHOWN ON LERCH BATES DRAWINGS. BUILDING SUPPORTS NOT TO DEFLECT IN EXCESS OF 3.175 MM (1/8") UNDER NORMAL CONDITIONS.
6. GUIDE RAIL BRACKET SUPPORTS IN CONCRETE. INSERTS OR IMBEDS, IF USED, WILL BE PROVIDED BY ELEVATOR CONTRACTOR AND INSTALLED BY GENERAL CONTRACTOR. VERIFY LOCATION ON ELEVATOR CONTRACTOR'S SHOP DRAWINGS.
7. CUTTING AND PATCHING WALLS, BEAMS AND FLOORS.
8. WALL BLOCK-OUTS AND FIRE-RATED CLOSURE FOR CONTROL AND SIGNAL FIXTURE BOXES WHICH PENETRATE WALLS.
9. STEEL BEAMS , CONCRETE WALL/BEAMS, OR STRUCTURAL SLAB FOR SUPPORT OF HOIST MACHINE, ROPE SHEAVES, AND DEAD-END HITCH BEAMS. SUPPORT BEAMS SHALL NOT EXCEED DEFLECTION OF L/1666 OF THE SPAN UNDER STATIC LOAD.
10. ERECT FRONT HOISTWAY WALL FOR SHAFTWALL CONSTRUCTION AFTER ELEVATOR ENTRANCE FRAMES HAVE BEEN INSTALLED.
11. ROUGH OPENINGS IF FRONT HOISTWAY WALLS ARE CONCRETE OR MASONRY, FOR TRACTION AND HYDRAULIC APPLICATIONS, FORM ROUGH OPENINGS 380 MM (15") GREATER IN WIDTH AND 380 MM (15") GREATER IN HEIGHT THAN CLEAR OPENING. FOR MRL APPLICATIONS, FORM ROUGH OPENINGS 500 MM (20") GREATER IN WIDTH AND 380 MM (15") GREATER IN HEIGHT THAN CLEAR OPENING. GROUT ROUGH OPENINGS AFTER ELEVATOR ENTRANCE FRAMES HAVE BEEN INSTALLED.
12. SOUND-ATTENUATING ASSEMBLIES FOR WALLS OF MACHINE ROOM, CONTROLLER SPACE AND/OR HOISTWAY WHERE SOUND-SENSITIVE AREAS ARE ADJACENT.
13. PIT ACCESS LADDER FOR EACH ELEVATOR THAT DOES NOT HAVE A WALK-IN PIT.
14. STRUCTURAL PIT FLOOR FOR TRACTION CAR AND COUNTERWEIGHT BUFFER AND GUIDE RAIL IMPACT LOADS. INDIVIDUAL ELEVATOR BUFFER AND GUIDE RAIL IMPACT LOADS DO NOT OCCUR SIMULTANEOUSLY.
15. WATERPROOF PIT INDIRECT WASTE DRAIN OR SUMP WITH FLUSH GRATE AND PUMP. FOR A17.1 2007+, PROVIDE MINIMUM SUMP PUMP/DRAIN CAPACITY OF 3000 GALLONS/HOUR PER ELEVATOR.
16. PROTECT OPEN HOISTWAYS AND ELEVATOR ENTRANCES DURING CONSTRUCTION PER O.S.H.A. REGULATIONS.
17. PROTECT CAR ENCLOSURE ELEVATOR ENTRANCES AND SPECIAL METAL FINISHES FROM DAMAGE AFTER INSTALLATION.
18. SMOKE VENTING (NOT REQUIRED PER IBC SECTION 3004.1 EXCEPTION 1

LEGAL MACHINE ROOMS AND CONTROLLER SPACES

1. REINFORCED MACHINE ROOM FLOOR CAPABLE OF SUPPORTING STATIC LOADS IMPOSED BY ELEVATOR EQUIPMENT, WITH THE EXCEPTION OF TRACTION ELEVATOR HOIST MACHINES. FLOORS SHALL SUSTAIN CONCENTRATED LOAD OF 1000 N (225 LBF) ON ANY 2000 SQUARE MM (3 SQUARE INCH) AREA.
2. WALL ENCLOSURES ERECTED AT MACHINE ROOM LEVEL AFTER MACHINE OR PUMP UNIT IS SET IN PLACE. SOUND-ATTENUATION FOR WALLS ADJACENT TO TENANT SPACE.
3. BLOCK-OUTS THROUGH MACHINE ROOM FLOOR, SECONDARY FLOOR AND/OR WALLS FOR HOIST ROPES, HYDRAULIC OIL LINE, AND ELECTRICAL WIRING DUCTS. VERIFY LOCATION ON ELEVATOR CONTRACTOR SHOP DRAWINGS.
4. SELF-CLOSING, SELF-LOCKING ACCESS DOOR OR GATE FOR MACHINE ROOM, CONTROLLER SPACE, AND MACHINERY SPACE. KEYING MUST BE INDEPENDENT OF ANY OTHER BUILDING LOCKS. DOOR OR GATE SHALL BE OPENABLE FROM INSIDE WITHOUT KEY. SOUND-ATTENUATING DOORS WHERE ACCESS IS FROM ADJACENT TENANT SPACE. RECOMMEND MINIMUM 1070 MM X 2130 MM (3'-6" X 7'-0") DOOR.
5. LEGAL ACCESS TO MACHINE ROOMS / CONTROLLER SPACES BY MEANS OF A STAIR WITH 60 DEGREE MAXIMUM ANGLE FROM THE HORIZONTAL. FOR PASSAGE ACROSS ROOFS, A STAIRWAY WITH A SWINGING DOOR AND PLATFORM AT THE TOP LEVEL SHALL BE PROVIDED FROM THE TOP FLOOR OF THE BUILDING TO THE ROOF LEVEL.
6. MACHINE AND CONTROLLER SPACE VENTILATION AND HEATING . FOR IBC, INDEPENDENT VENTILATION OR AIR-CONDITIONING SYSTEM TO PREVENT OVERHEATING OF SOLID-STATE ELECTRICAL EQUIPMENT. MAINTAIN MINIMUM TEMPERATURE OF 13°C (55°F) MAXIMUM 32°C (90°F). MAINTAIN MAXIMUM 80% RELATIVE HUMIDITY, NON-CONDENSING. HVAC UNIT MAY BE LOCATED WITHIN THE BOUNDS OF THE MACHINE/CONTROLLER ROOM IF SOLELY FOR THE HEATING OR COOLING OF THAT MACHINE/CONTROLLER ROOM.
7. MINIMUM HEADROOM CLEARANCES: 2400 MM (8'-0") RECOMMENDED UNDER MACHINE ROOM / CONTROLLER SPACE CEILING AND 2275 MM (7'-6") UNDER ENCROACHING BEAMS (INCLUDING FIREPROOFING). CLEARANCE ABOVE HOIST MACHINE AS SHOWN ON LERCH BATES DRAWINGS. CODE MINIMUM CLEARANCE: 2130 MM (7'-0").
8. HOIST BEAM IN EACH TRACTION ELEVATOR MACHINE ROOM FOR INSTALLATION AND MAINTENANCE AS INDICATED IN LB SECTION DRAWINGS. BOTTOM OF BEAM SHALL MEET THE MINIMUM CLEAR DIMENSION. MAKE HOIST BEAM REMOVABLE IF NECESSARY TO MEET MIN CLEAR DIMENSION. VERIFY HOIST BEAM LOCATION AND LOAD REQUIREMENTS WITH ELEVATOR CONTRACTOR. NO OTHER TRADES MAY OBSTRUCT THE HOIST BEAM OR USE IT TO HANG EQUIPMENT SUCH AS SPRINKLER LINES, CONDUIT, ETC.
9. MACHINE ROOM AND CONTROLLER SPACE FIRE SPRINKLER RUNS MUST TERMINATE WITHIN THE BOUNDS OF THE MACHINE ROOM / CONTROLLER SPACE. SHUT OFF VALVES SHALL BE LOCATED OUTSIDE THE BOUNDS OF THE MACHINE ROOM / CONTROLLER SPACE. MAINTAIN MINIMUM 2130 MM (7'-0") CLEAR HEADROOM UNDER PIPE RUNS.
10. CLASS "ABC" FIRE EXTINGUISHER IN EACH ELEVATOR MACHINE ROOM / CONTROLLER SPACE.
11. MACHINE ROOM / CONTROLLER SPACE ENCLOSURES AND ACCESS DOORS SHALL HAVE A FIRE ENDURANCE AT LEAST EQUAL TO THAT REQUIRED FOR THE HOISTWAY ENCLOSURE AND THE HOISTWAY DOORS, RESPECTIVELY.
12. ONLY EQUIPMENT USED IN CONJUNCTION WITH THE FUNCTION OF THE ELEVATOR SHALL BE PERMITTED IN THE ELEVATOR MACHINE ROOM AND CONTROLLER SPACE. ACCESS THROUGH ELEVATOR MACHINE/CONTROLLER SPACES TO ADJACENT ROOMS OR AREAS SHALL NOT BE PERMITTED. PERMANENT AND UNOBSTRUCTED ACCESS TO MACHINE/CONTROLLER SPACES SHALL BE PROVIDED FOR AUTHORIZED PERSONNEL.

STANDBY POWER PROVISIONS

1. STANDBY POWER OF NORMAL VOLTAGE CHARACTERISTICS VIA NORMAL ELECTRICAL FEEDERS TO RUN ONE ELEVATOR AT A TIME IN EACH ELEVATOR GROUP AND/OR SINGLE ELEVATOR UNIT AT FULL RATED CAR SPEED AND CAPACITY.

   CONDUCTOR FROM AUXILIARY FORM "C" DRY CONTACTS, LOCATED IN THE STANDBY POWER TRANSFER SWITCH TO A DESIGNATED ELEVATOR CONTROL PANEL IN EACH ELEVATOR GROUP AND/OR SINGLE ELEVATOR UNIT. PROVIDE TIME DELAY OF 30-45 SECONDS FOR PRE-TRANSFER SIGNAL IN EITHER DIRECTION.

   STANDBY SINGLE-PHASE POWER TO GROUP CONTROLLER, AND EACH ELEVATOR CONTROLLER FOR CAR LIGHTING, EXHAUST BLOWER, EMERGENCY SIGNALING DEVICE, INTERCOM AMPLIFIER, HOIST MACHINE COOLING FAN, CAR HEATING AND AIR CONDITIONING UNIT, AND MACHINE ROOM VENTILATION OR AIR CONDITIONING.

2. MEANS FOR ABSORBING REGENERATIVE POWER DURING AN OVERHAULING LOAD (SUCH AS FULL LOAD DOWN).

   NOTE: ELEVATOR DRIVES MAY EMPLOY IGBT POWER CONVERSION UNITS.

   NOTE: ELEVATORS REQUIRED FOR USE DURING CONSTRUCTION MUST COMPLY WITH ALL ELEVATOR AND FIRE/LIFE SAFETY CODES.

ELECTRICAL SERVICES

1. LIGHTING AND GFCI CONVENIENCE OUTLETS IN PIT, MACHINE ROOM, CONTROLLER SPACE, AND OVERHEAD MACHINERY SPACE. ADEQUATE LIGHTING TO MAINTAIN 100 LUX (10 FC) MINIMUM ILLUMINATION AT THE PIT FLOOR, AND 200 LUX (19 FC) AT THE MACHINE ROOM FLOOR, CONTROL ROOM FLOOR, AND OVERHEAD AND SECONDARY MACHINERY SPACES.
2. THREE-PHASE MAINLINE COPPER POWER FEEDER TO TERMINALS OF EACH ELEVATOR CONTROLLER WITH PROTECTED, LOCKABLE "OPEN", DISCONNECTING MEANS MEETING NEC REQUIREMENTS. LOCATE DISCONNECTING MEANS IN THE MACHINE ROOM / CONTROLLER SPACE. VERIFY CONTROLLER LOCATION ON ELEVATOR SHOP DRAWINGS. PROVIDE CLEARANCES AROUND DISCONNECTING MEANS AS REQUIRED BY CODE. AUXILIARY FEEDERS AND DISCONNECTING MEANS FOR MACHINE/CONTROLLER ROOMS WITH MULTIPLE LEVELS. AUXILIARY CONTACTS FOR HYDRAULIC ELEVATORS FOR BATTERY LOWERING DEVICE ELECTRICAL INTERLOCK.
3. SINGLE-PHASE COPPER POWER FEEDER TO EACH CONTROLLER FOR CAR LIGHTING, EXHAUST BLOWER AND CONVENIENCE OUTLET WITH PROTECTED, LOCKABLE "OPEN", DISCONNECTING MEANS MEETING NEC REQUIREMENTS. LOCATE DISCONNECTING MEANS IN THE MACHINE/CONTROLLER ROOM. VERIFY CONTROLLER LOCATION ON ELEVATOR SHOP DRAWINGS.
4. FIRE ALARM INITIATING DEVICES IN EACH ELEVATOR LOBBY, FOR EACH MULTIPLE HOISTWAY OR SINGLE HOISTWAY AND EACH MACHINE ROOM / CONTROLLER SPACE, TO INITIATE FIREFIGHTER'S RETURN FEATURE. DEVICE AT TOP OF HOISTWAY IF SPRINKLERED. PROVIDE A DISCRETE SIGNAL FROM EACH OF THE FOLLOWING ZONES OR DETECTORS: MAIN LOBBY, ALL OTHER LOBBIES, EACH HOISTWAY, AND EACH MACHINE ROOM / CONTROLLER SPACE. WHERE A GROUP OF ELEVATORS INCLUDES MULTIPLE HOISTWAYS, PROVIDE A DISCRETE SIGNAL FROM EACH HOISTWAY. SUPPLY TWO DRY CONTACTS AND DETECTOR WIRES TO EACH ELEVATOR GROUP CONTROLLER IN EACH ELEVATOR MACHINE ROOM / CONTROLLER SPACE.
5. MEANS TO AUTOMATICALLY DISCONNECT POWER TO AFFECTED ELEVATOR DRIVE UNIT AND CONTROLLER PRIOR TO ACTIVATION OF MACHINE ROOM / CONTROLLER SPACE, OVERHEAD FIRE SPRINKLER SYSTEMS, AND/OR OF HOISTWAY OVERHEAD FIRE SPRINKLER SYSTEMS. MANUAL SHUT-OFF MEANS SHALL BE LOCATED OUTSIDE THE BOUNDS OF THE MACHINE/CONTROLLER ROOM.
6. TEMPORARY POWER AND ILLUMINATION TO INSTALL, TEST AND ADJUST ELEVATOR EQUIPMENT.
7. EMERGENCY TELEPHONE LINE TO EACH INDIVIDUAL OR DESIGNATED ELEVATOR CONTROL PANEL IN ELEVATOR MACHINE/CONTROLLER ROOM.
8. SINGLE-PHASE POWER FEEDERS TO MACHINE ROOM / CONTROLLER SPACE ELEVATOR MONITORING PANEL/DISPLAY UNIT WITH SINGLE-PHASE, PROTECTED, LOCKABLE "OPEN", DISCONNECTING MEANS MEETING NEC REQUIREMENTS.
9. SINGLE-PHASE POWER FEEDERS TO CONTROLLER(S) FOR CCTV WITH LOCKABLE "OPEN", DISCONNECTING MEANS MEETING NEC REQUIREMENTS.
10. SINGLE-PHASE POWER FEEDERS TO CONTROLLER(S) FOR ROPE BRAKE AIR COMPRESSOR WITH DISCONNECTING MEANS MEETING NEC REQUIREMENTS.

7 VT01 RELATED WORK NOT PROVIDED IN ELEVATOR CONTRACT
SCALE: NTS
(BASED ON ASME A17.1 SAFETY CODE FOR ELEVATORS AND ESCALATORS. CONSULT LOCAL CODES FOR ADDITIONAL REQUIREMENTS.)

100% SUBMITTAL

AECOM
AECOM TECHNICAL SERVICES, INC.
3101 WILSON BOULEVARD
SUITE 900
ARLINGTON, VA 22201
T: 703-682-4900 F: 703.682.4901
www.aecom.com

SEAL AREA

KEY PLAN

REV	DATE	DESCRIPTION	S&R BR.	CUSTOMER	PM	SECT. HEAD

	INITIALS	DATE
DRAWN BY	LA/NS	
CHECKED BY	BW/MW	
A-E MANAGER	EW	
ENVIRONMENTAL BRANCH	JH	
SAFETY BRANCH	CS	
CM	MMD	
PM	RWP	
CUSTOMER	JWB	
ENG. BRANCH	DGL	

ELEVATOR - GENERAL INFORMATION (FOR INFORMATION ONLY)

A-721

FLIGHT PROJECTS BUILDING

NATIONAL AERONAUTICS AND SPACE ADMINISTRATION
GODDARD SPACE FLIGHT CENTER GREENBELT, MARYLAND
FACILITIES MANAGEMENT DIVISION

DATE ISSUED	CoF CODE OR WR#	AECOM PROJECT NO.	SCALE
10/12/2012	12GXAZ	60187636	

FILE DATE: 10/11/2012 4:14:55 PM

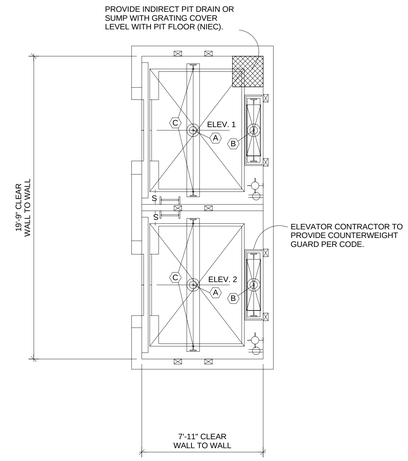

1 A-722 PIT PLAN ELEVATORS 1 & 2
SCALE: 1/4" = 1'-0"
DUTY: 4000# @ 350 FPM

PIT REACTION TABLE		
DUTY: 4000# @ 350 FPM		
KEY	REACTION	
A	68.2 K	
B	59.4 K	
C	27.5 K EACH	(SEE CAR R3 RAIL FORCE)

REACTIONS DO NOT OCCUR SIMULTANEOUSLY

REACTIONS HAVE BEEN DOUBLED FOR IMPACT

PROVIDE ADEQUATE LIGHTING TO MAINTAIN MIN. 100 LUX (10 FC) ILLUMINATION AT PIT FLOOR (NIEC)

PROVIDE PIT ACCESS LADDER(S) OR DOOR(S), LIGHT SWITCH(ES), LIGHT(S), AND GFCI-PROTECTED UTILITY OUTLET(S) (NIEC)

COORDINATE LIGHT FIXTURES AND UTILITY OUTLETS LOCATION WITH ELECTRICAL DRAWINGS (NIEC).

PROVIDE ADEQUATE STRUCTURAL SUPPORT REQUIRED FOR BUFFER AND R3 RAIL FORCE REACTIONS (NIEC)

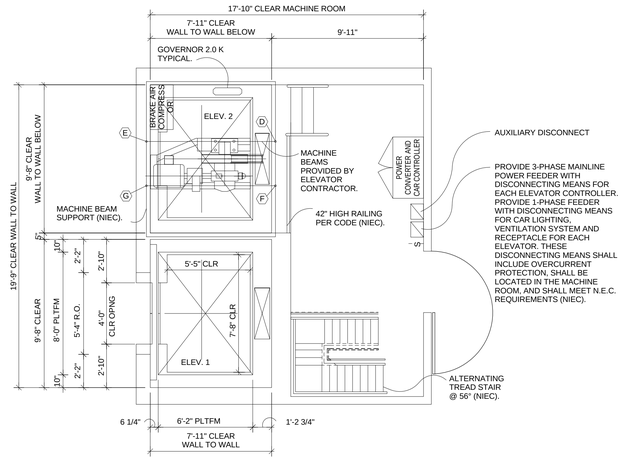

3 A-722 MACHINE ROOM PLAN ELEVATOR 2 HOISTWAY PLAN ELEVATOR 1
SCALE: 1/4" = 1'-0"
DUTY: 4000# @ 350 FPM

MACH RM REACTION TABLE	
DUTY: 4000# @ 350 FPM	
KEY	REACTION
D	20.6 K
E	13.3 K
F	13.3 K
G	8.7 K

REACTIONS HAVE BEEN DOUBLED FOR IMPACT

REACTIONS DO NOT INCLUDE DEAD OR LIVE LOADS OF MACHINE ROOM FLOOR

PROVIDE SELF-CLOSING, SELF-LOCKING MACHINE ROOM ACCESS DOOR (NIEC)

PROVIDE ADEQUATE LIGHTING TO MAINTAIN MIN. 200 LUX (19 FC) ILLUMINATION AT MACHINE ROOM FLOOR (NIEC)

PROVIDE LIGHTS, LIGHT SWITCHES AND GFCI-PROTECTED UTILITY OUTLETS. COORDINATE LOCATIONS WITH ELEVATOR CONTRACTOR (NIEC).

MACHINE ROOM HEAT EMISSION 23,700 BTUH TOTAL

PROVIDE STRUCTURAL SUPPORT TO SUSTAIN REACTIONS INDICATED (NIEC)

DASHED LINE INDICATES HOISTWAY BELOW

FOR EQUIPMENT IN THE MACHINE ROOM, A CLEARANCE OF NOT LESS THAN 450 MM (18") SHALL BE PROVIDED IN THE DIRECTION(S) REQUIRED FOR MAINTENANCE, AND A CLEAR PATH OF NOT LESS THAN 450 MM (18") SHALL BE PROVIDED TO ALL COMPONENTS THAT REQUIRE MAINTENANCE

IF A STRUCTURAL CONCRETE SLAB IS USED TO SUPPORT THE HOIST MACHINE(S), THE STRUCTURAL ENGINEER SHALL COORDINATE THE SLAB DESIGN AND ASSOCIATED DETAILS WITH THE DESIGNATED ELEVATOR CONTRACTOR. THE SLAB DESIGN SHALL MEET ALL APPLICABLE REQUIREMENTS OF ASME A17.1 (NIEC).

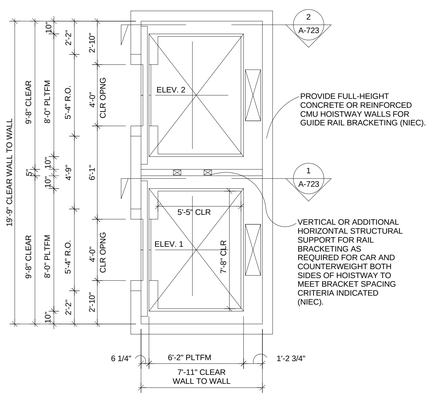

2 A-722 HOISTWAY PLAN ELEVATORS 1 & 2
SCALE: 1/4" = 1'-0"
DUTY: 4000# @ 350 FPM

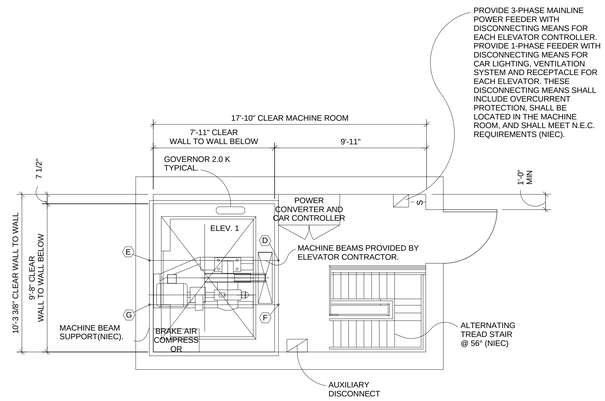

4 A-722 MACHINE ROOM PLAN ELEVATOR 1
SCALE: 1/4" = 1'-0"
DUTY: 4000# @ 350 FPM

MACH RM REACTION TABLE	
DUTY: 4000# @ 350 FPM	
KEY	REACTION
D	20.6 K
E	13.3 K
F	13.3 K
G	8.7 K

REACTIONS HAVE BEEN DOUBLED FOR IMPACT

REACTIONS DO NOT INCLUDE DEAD OR LIVE LOADS OF MACHINE ROOM FLOOR

PROVIDE SELF-CLOSING, SELF-LOCKING MACHINE ROOM ACCESS DOOR (NIEC)

PROVIDE ADEQUATE LIGHTING TO MAINTAIN MIN. 200 LUX (19 FC) ILLUMINATION AT MACHINE ROOM FLOOR (NIEC)

PROVIDE LIGHTS, LIGHT SWITCHES AND GFCI-PROTECTED UTILITY OUTLETS. COORDINATE LOCATIONS WITH ELEVATOR CONTRACTOR (NIEC).

MACHINE ROOM HEAT EMISSION 23,700 BTUH TOTAL

PROVIDE STRUCTURAL SUPPORT TO SUSTAIN REACTIONS INDICATED (NIEC)

DASHED LINE INDICATES HOISTWAY BELOW

FOR EQUIPMENT IN THE MACHINE ROOM, A CLEARANCE OF NOT LESS THAN 450 MM (18") SHALL BE PROVIDED IN THE DIRECTION(S) REQUIRED FOR MAINTENANCE, AND A CLEAR PATH OF NOT LESS THAN 450 MM (18") SHALL BE PROVIDED TO ALL COMPONENTS THAT REQUIRE MAINTENANCE

IF A STRUCTURAL CONCRETE SLAB IS USED TO SUPPORT THE HOIST MACHINE(S), THE STRUCTURAL ENGINEER SHALL COORDINATE THE SLAB DESIGN AND ASSOCIATED DETAILS WITH THE DESIGNATED ELEVATOR CONTRACTOR. THE SLAB DESIGN SHALL MEET ALL APPLICABLE REQUIREMENTS OF ASME A17.1 (NIEC).

100% SUBMITTAL

AECOM
AECOM TECHNICAL SERVICES, INC.
3101 WILSON BOULEVARD
SUITE 900
ARLINGTON, VA 22201
T: 703-682-4900 F: 703.682.4901
www.aecom.com

SEAL AREA

KEY PLAN

REV	DATE	DESCRIPTION	S&R BR.	CUSTOMER	PM	SECT. HEAD

	INITIALS	DATE
DRAWN BY	LA/NS	
CHECKED BY	BW/MW	
A-E MANAGER	EW	
ENVIRONMENTAL BRANCH	JH	
SAFETY BRANCH	CS	
CM	MMD	
PM	RWP	
CUSTOMER	JWB	
ENG. BRANCH	DGL	

ELEVATOR - PLANS (FOR INFORMATION ONLY)

A-722

FLIGHT PROJECTS BUILDING

NATIONAL AERONAUTICS AND SPACE ADMINISTRATION
GODDARD SPACE FLIGHT CENTER GREENBELT, MARYLAND
FACILITIES MANAGEMENT DIVISION

DATE ISSUED	CoF CODE OR WR#	AECOM PROJECT NO.	SCALE
10/12/2012	12GXAZ	60187636	1/4" = 1'-0"

FILE DATE: 10/11/2012 4:15:05 PM

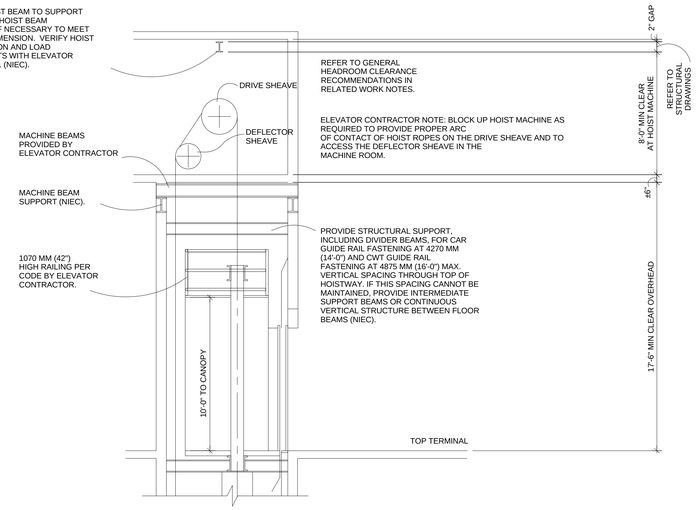

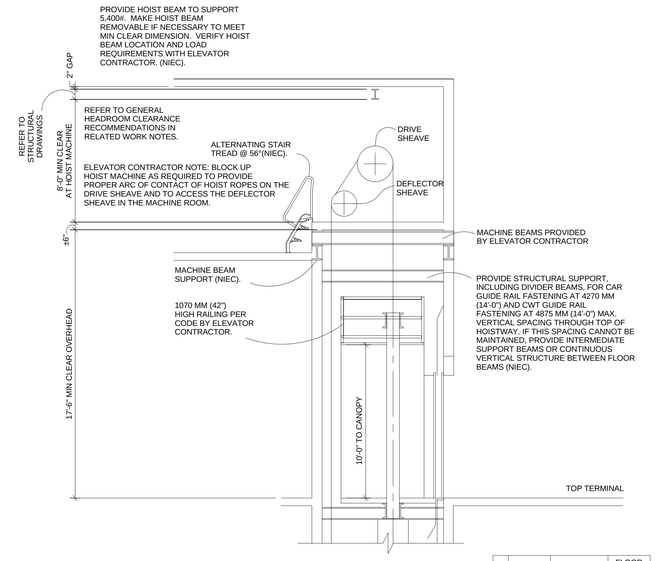

NOTE: ALL VERTICAL DIMENSIONS THAT ARE DIMENSIONED FROM A BUILDING FLOOR ELEVATION ARE DIMENSIONED TO THE FINISH FLOOR ELEVATION.

	FLOOR NUMBER	OPENING FRONT/REAR		FLOOR HEIGHT (FEET)
	PH	F/O		
	4	F/O		16'-0"
	3	F/O		16'-0"
	2	F/O		16'-0"
	1	F/O		16'-0"
TOTAL	OPENINGS	5		
	STOPS	5		
	TRAVEL			64'-0"

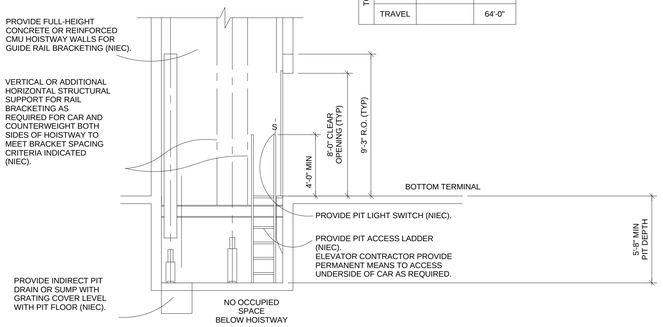

1 A-723 HOISTWAY SECTION
ELEVATOR 1
SCALE: 1/4" = 1'-0"
DUTY: 4000# @ 350 FPM

NOTE: ALL VERTICAL DIMENSIONS THAT ARE DIMENSIONED FROM A BUILDING FLOOR ELEVATION ARE DIMENSIONED TO THE FINISH FLOOR ELEVATION.

	FLOOR NUMBER	OPENING FRONT/REAR		FLOOR HEIGHT (FEET)
	4	F/O		
	3	F/O		16'-0"
	2	F/O		16'-0"
	1	F/O		16'-0"
TOTAL	OPENINGS	4		
	STOPS	4		
	TRAVEL			48'-0"

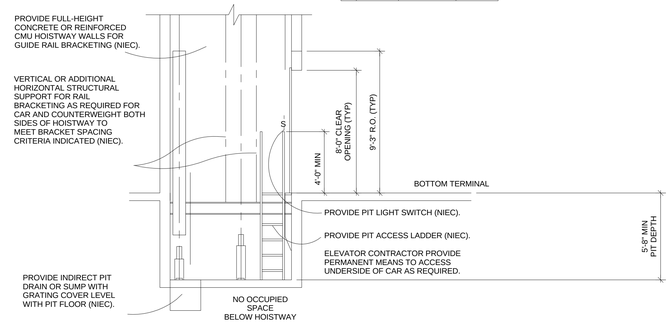

2 A-723 HOISTWAY SECTION
ELEVATOR 2
SCALE: 1/4" = 1'-0"
DUTY: 4000# @ 350 FPM

100% SUBMITTAL

AECOM
AECOM TECHNICAL SERVICES, INC.
3101 WILSON BOULEVARD
SUITE 900
ARLINGTON, VA 22201
T: 703-682-4900 F: 703.682.4901
www.aecom.com

SEAL AREA

BOARD OF ARCHITECTS 10/2012 EDWARD WILSON WARREN STATE OF MARYLAND

KEY PLAN

REV	DATE	DESCRIPTION	S&R BR.	CUSTOMER	PM	SECT. HEAD

	INITIALS	DATE
DRAWN BY	LA/NS	
CHECKED BY	BW/MW	
A-E MANAGER	EW	
ENVIRONMENTAL BRANCH	JH	
SAFETY BRANCH	CS	
CM	MMD	
PM	RWP	
CUSTOMER	JWB	
ENG. BRANCH	DGL	

ELEVATOR - SECTIONS (FOR INFORMATION ONLY)

A-723

FLIGHT PROJECTS BUILDING

NATIONAL AERONAUTICS AND SPACE ADMINISTRATION
GODDARD SPACE FLIGHT CENTER GREENBELT, MARYLAND
FACILITIES MANAGEMENT DIVISION

DATE ISSUED	CoF CODE OR WR#	AECOM PROJECT NO.	SCALE
10/12/2012	12GXAZ	60187636	1/4" = 1'-0"

FILE DATE: 10/11/2012 4:15:14 PM

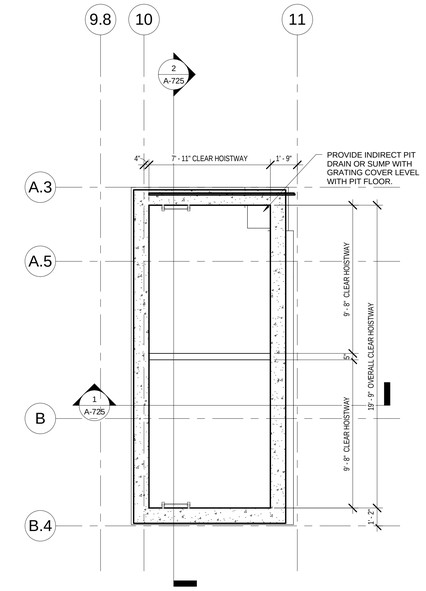

1 ELEVATOR - PIT PLAN

A-724 REF. A-101b SCALE: 1/4" = 1'-0"

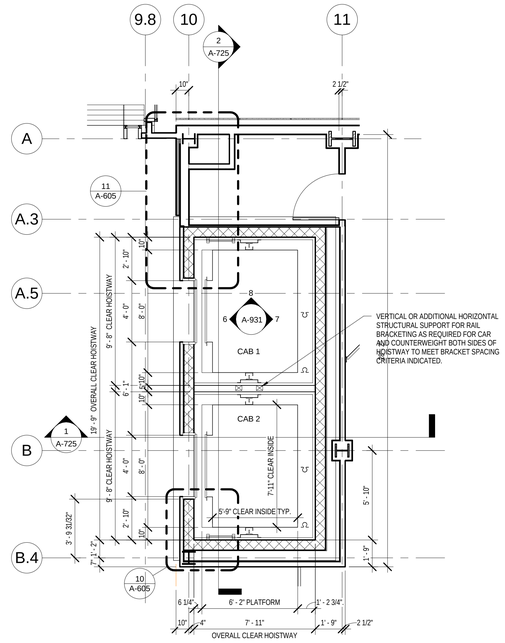

2 ELEVATOR - HOISTWAY PLAN

A-724 REF. A-101b SCALE: 1/4" = 1'-0"

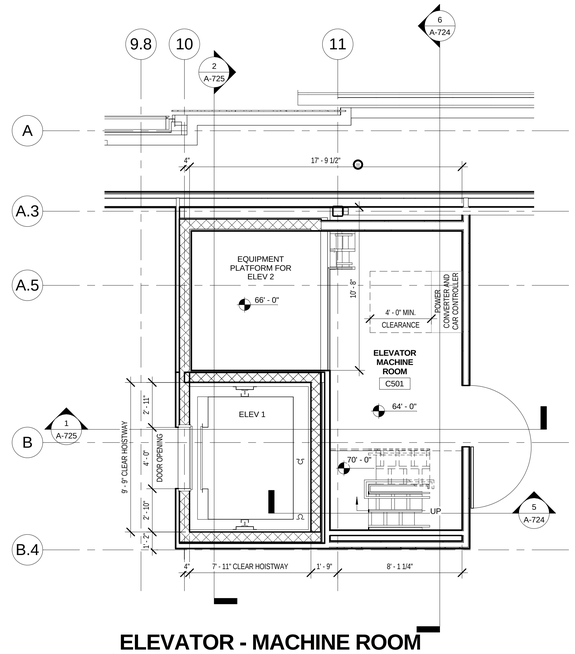

3 ELEVATOR - MACHINE ROOM @ PENTHOUSE

A-724 REF. A-106 SCALE: 1/4" = 1'-0"

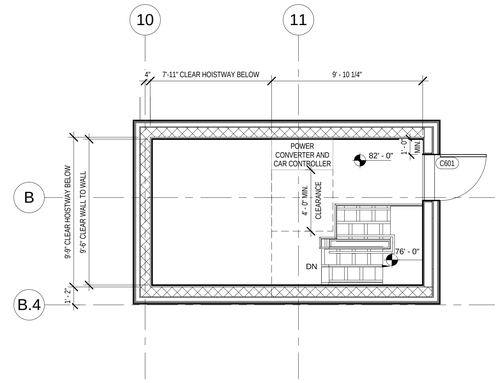

4 ELEVATOR - MACHINE ROOM @ PENTHOUSE ROOF

A-724 REF. SCALE: 1/4" = 1'-0"

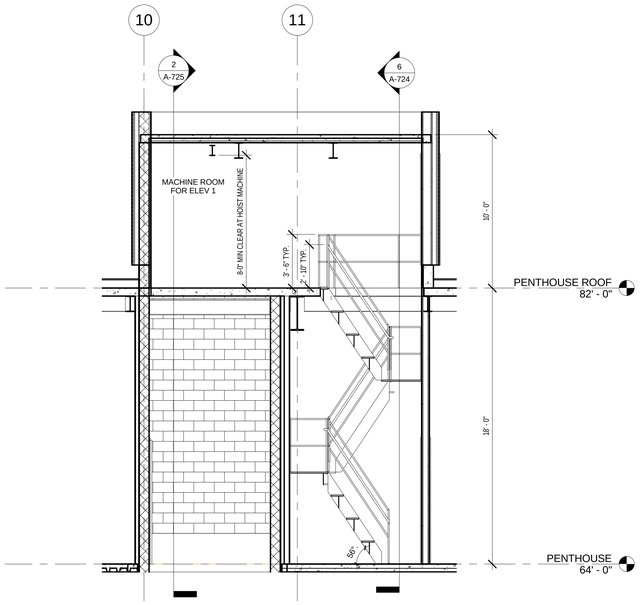

5 ELEVATOR - STAIR SECTION

A-724 REF. A-724 SCALE: 1/4" = 1'-0"

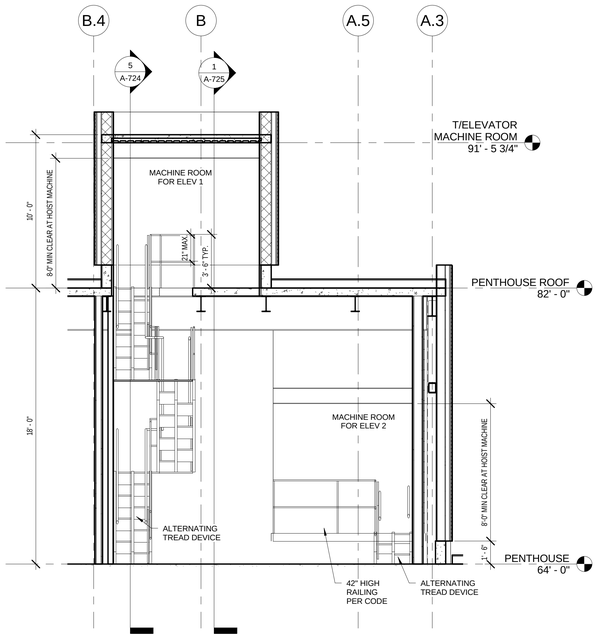

6 ELEVATOR - STAIR SECTION

A-724 REF. A-724 SCALE: 1/4" = 1'-0"

100% SUBMITTAL

AECOM

AECOM TECHNICAL SERVICES, INC.
3101 WILSON BOULEVARD
SUITE 900
ARLINGTON, VA 22201

T: 703-682-4900 F: 703.682.4901
www.aecom.com

SEAL AREA

BOARD OF ARCHITECTS 10164 EDWARD J. WEBER STATE OF MARYLAND

KEY PLAN

REV	DATE	DESCRIPTION	S&R BR.	CUSTOMER	PM	SECT. HEAD

	INITIALS	DATE
DRAWN BY	LA/NS	
CHECKED BY	BW/MW	
A-E MANAGER	EW	
ENVIRONMENTAL BRANCH	JH	
SAFETY BRANCH	CS	
CM	MMD	
PM	RWP	
CUSTOMER	JWB	
ENG. BRANCH	DGL	
ARCHITECTURE		

ELEVATORS

A-724

FLIGHT PROJECTS BUILDING

NATIONAL AERONAUTICS AND SPACE ADMINISTRATION

GODDARD SPACE FLIGHT CENTER GREENBELT, MARYLAND
FACILITIES MANAGEMENT DIVISION

DATE ISSUED	CoF CODE OR WR#	AECOM PROJECT NO.	SCALE
10/12/2012	12GXAZ	60187636	1/4" = 1'-0"

FILE DATE: 10/11/2012 4:15:28 PM

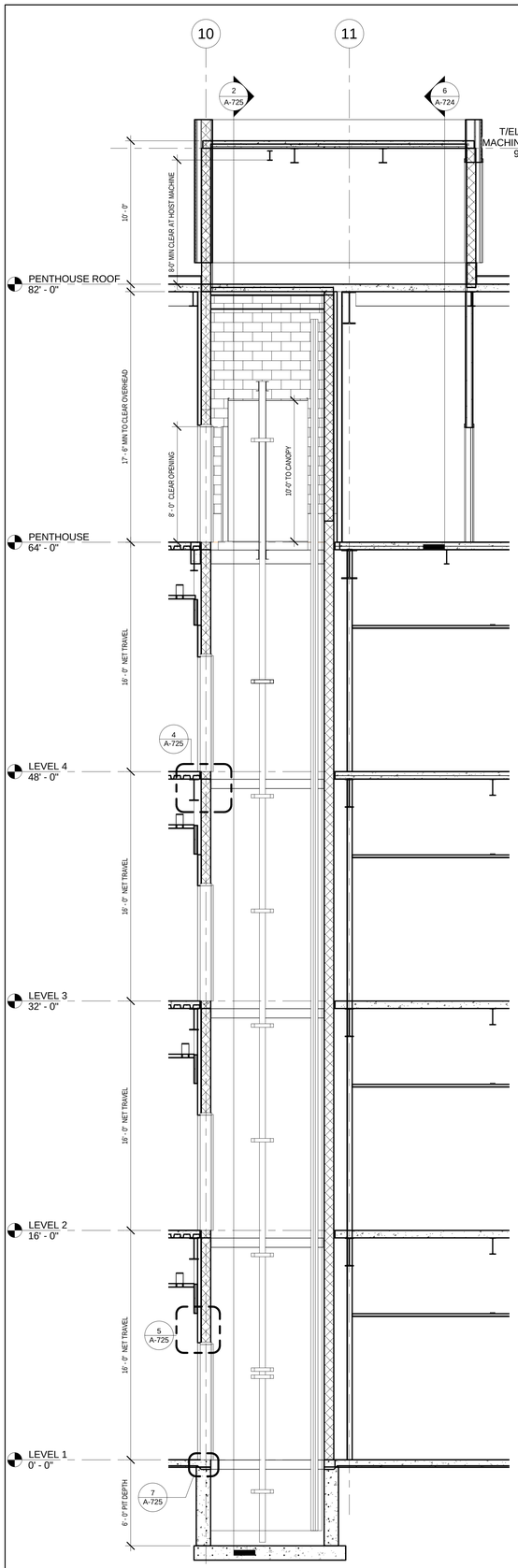

1 ELEVATOR - NORTH-SOUTH SECTION

A-725 | REF. A-724 SCALE: 1/4" = 1'-0"

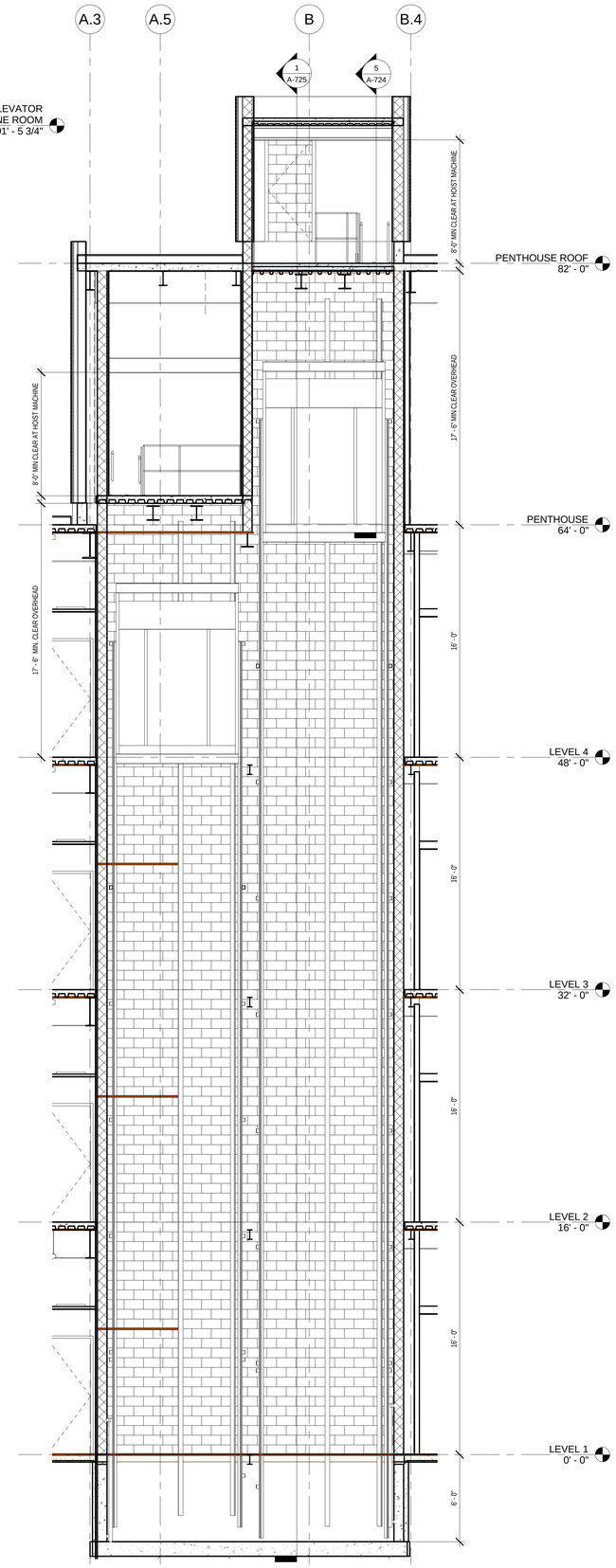

2 ELEVATOR - EAST-WEST SECTION

A-725 | REF. A-605 SCALE: 1/4" = 1'-0"

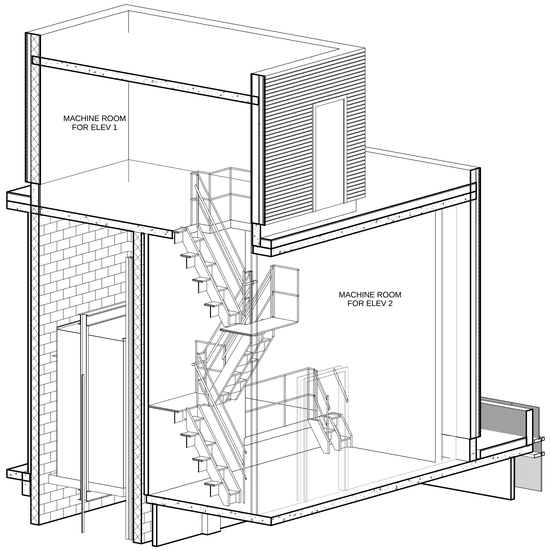

3 ELEVATOR

A-725 | REF. SCALE:

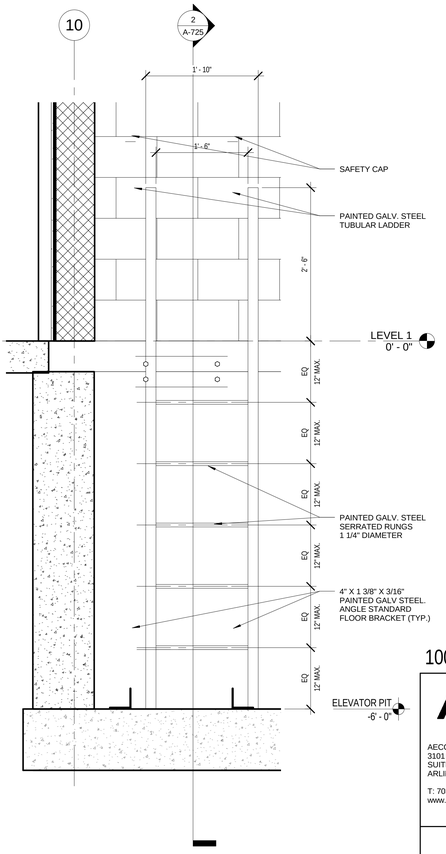

6 ELEVATOR - LADDER

A-725 | REF. A-605 SCALE: 1" = 1'-0"

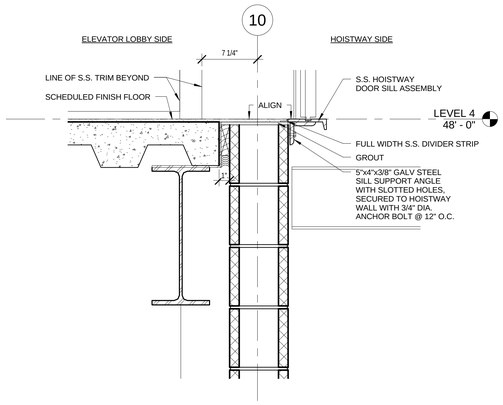

4 ELEVATOR - DETAIL AT FLOOR SLAB

A-725 | REF. A-725 SCALE: 1 1/2" = 1'-0"

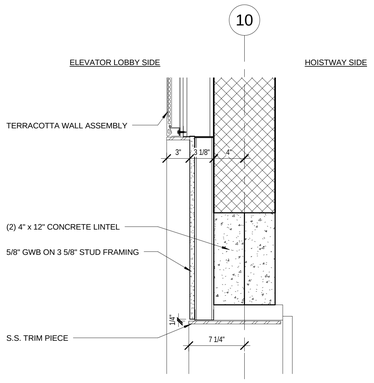

5 ELEVATOR - HEAD DETAIL

A-725 | REF. A-725 SCALE: 1 1/2" = 1'-0"

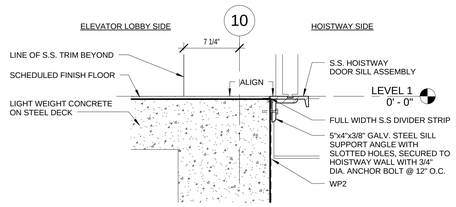

7 ELEVATOR - DETAIL ON GRADE SLAB

A-725 | REF. A-725 SCALE: 1 1/2" = 1'-0"

100% SUBMITTAL

AECOM

AECOM TECHNICAL SERVICES, INC.
3101 WILSON BOULEVARD
SUITE 900
ARLINGTON, VA 22201

T: 703-682-4900 F: 703.682.4901
www.aecom.com

SEAL AREA

STATE OF MARYLAND — BOARD OF ARCHITECTS — REGISTERED ARCHITECT — 102694

KEY PLAN

REV	DATE	DESCRIPTION	S&R BR.	CUSTOMER	PM	SECT. HEAD

	INITIALS	DATE
DRAWN BY	LA/NS	
CHECKED BY	BW/MW	
A-E MANAGER	EW	
ENVIRONMENTAL BRANCH	JH	
SAFETY BRANCH	CS	
CM	MMD	
PM	RWP	
CUSTOMER	JWB	
ENG. BRANCH	DGL	

ELEVATOR

A-725

FLIGHT PROJECTS BUILDING

NATIONAL AERONAUTICS AND SPACE ADMINISTRATION

GODDARD SPACE FLIGHT CENTER GREENBELT, MARYLAND
FACILITIES MANAGEMENT DIVISION

DATE ISSUED	CoF CODE OR WR#	AECOM PROJECT NO.	SCALE
10/12/2012	12GXAZ	60187636	As indicated

FILE DATE: 10/11/2012 4:15:44 PM

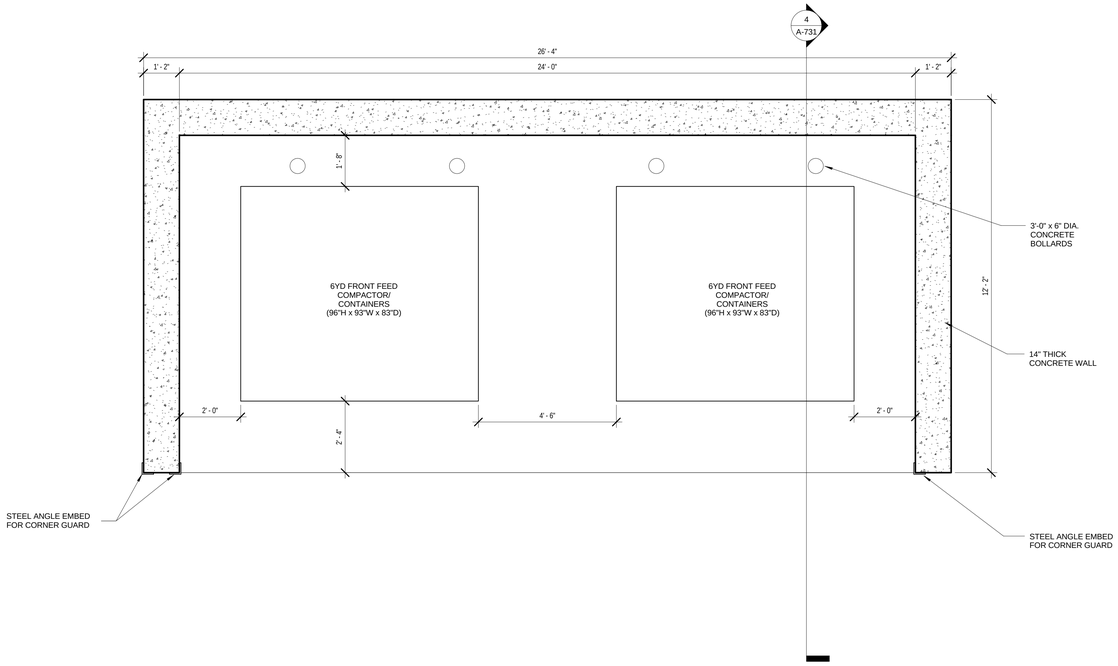

1 DUMPSTER - PLAN

A-731 REF. A-101 SCALE: 1/2" = 1'-0"

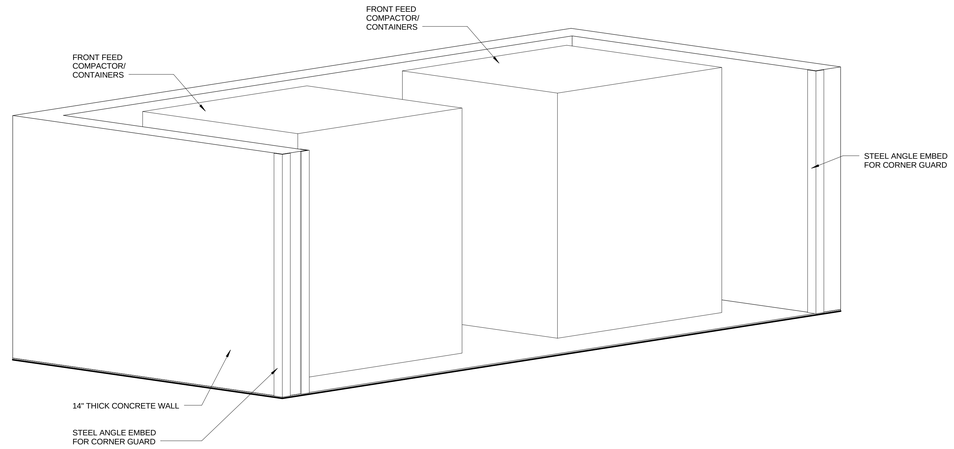

2 DUMPSTER - 3D VIEW

A-731 REF. SCALE:

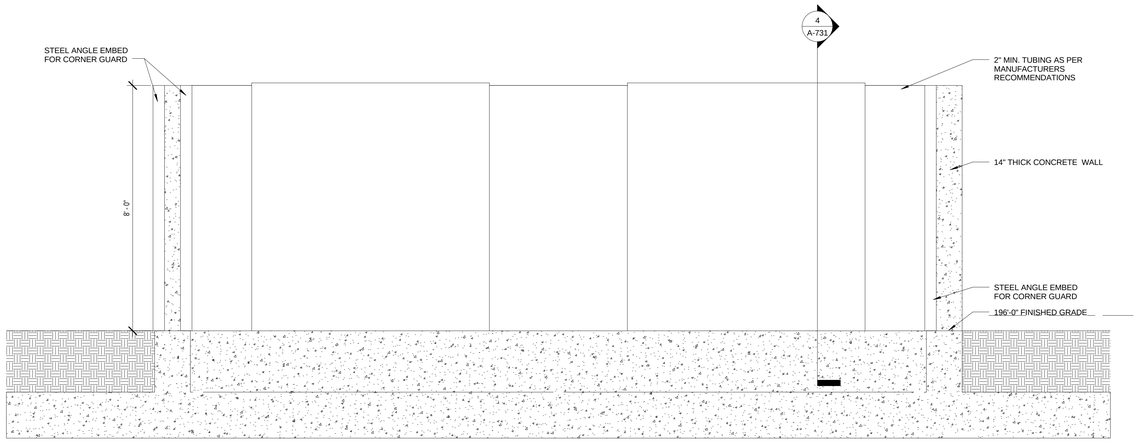

3 DUMPSTER - SECTION

A-731 REF. SCALE: 1/2" = 1'-0"

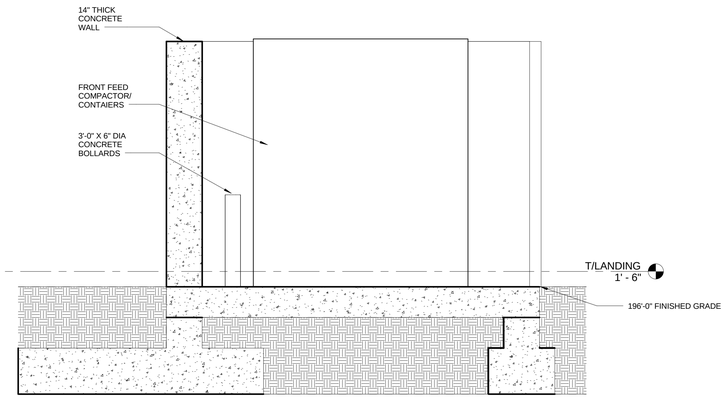

4 DUMPSTER - SECTION

A-731 REF. A-731 SCALE: 1/2" = 1'-0"

100% SUBMITTAL

AECOM

AECOM TECHNICAL SERVICES, INC.
3101 WILSON BOULEVARD
SUITE 900
ARLINGTON, VA 22201

T: 703-682-4900 F: 703.682.4901
www.aecom.com

SEAL AREA

BOARD OF ARCHITECTURE
EDWARD WILSON
STATE OF MARYLAND

KEY PLAN

REV	DATE	DESCRIPTION	S&R BR.	CUSTOMER	PM	SECT. HEAD

	INITIALS	DATE
DRAWN BY	LA/NS	
CHECKED BY	BW/MW	
A-E MANAGER	EW	
ENVIRONMENTAL BRANCH	JH	
SAFETY BRANCH	CS	
CM	MMD	
PM	RWP	
CUSTOMER	JWB	
ENG. BRANCH	DGL	

DUMPSTER

A-731

FLIGHT PROJECTS BUILDING

NATIONAL AERONAUTICS AND SPACE ADMINISTRATION

GODDARD SPACE FLIGHT CENTER GREENBELT, MARYLAND
FACILITIES MANAGEMENT DIVISION

DATE ISSUED	CoF CODE OR WR#	AECOM PROJECT NO.	SCALE
10/12/2012	12GXAZ	60187636	1/2" = 1'-0"

FILE DATE: 10/11/2012 4:15:55 PM

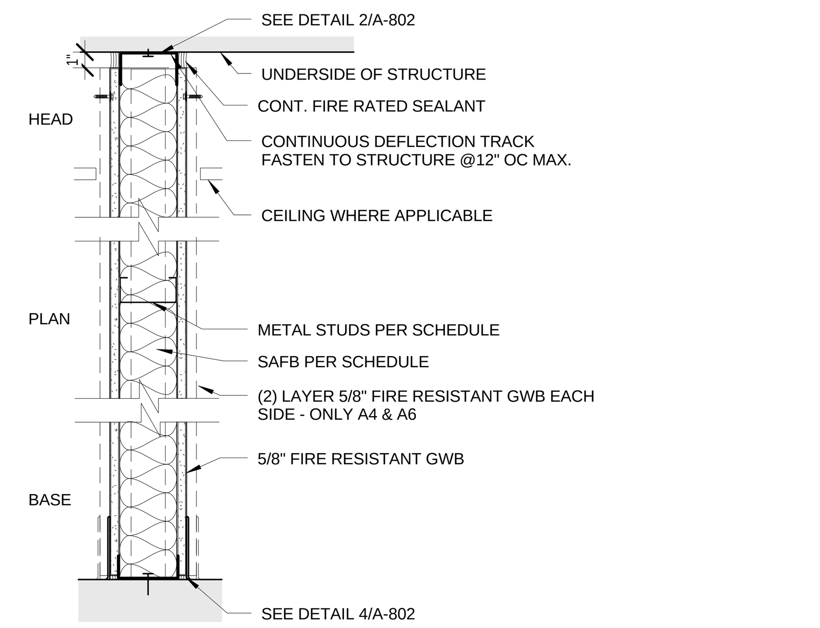

A 1HR & 2HR RATED PARTITION

1 1/2"=1'-0"

TYPE	STUD	TOTAL WIDTH	SAFB	RATING	UL	STC	NOTES
A1	.	.	.	.	.	.	NOT USED
A2	.	.	.	.	.	.	NOT USED
A3	3 5/8"	4 7/8"	3"	1 HR	U419	.	.
A4	3 5/8"	6 1/8"	3"	2 HR	U419	.	(2) LAYER 5/8" FIRE RESISTANT GWB EA. SIDE
A5	6"	7 1/4"	3"	1 HR	U419	.	.
A6	6"	8 1/2"	3"	2 HR	U419	.	(2) LAYER 5/8" FIRE RESISTANT GWB EA. SIDE
A7	6"	7 1/4"	3"	1 HR	U419	.	SMOKE BARRIER

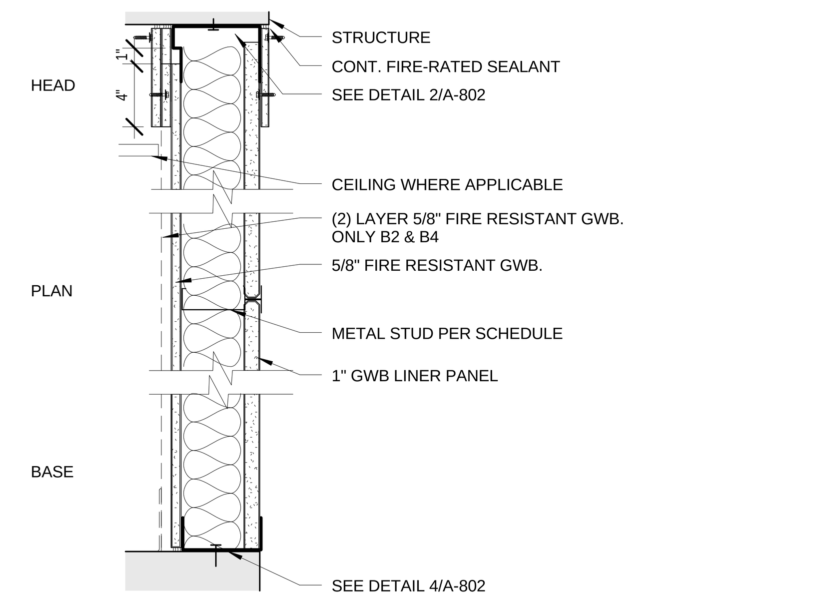

B 1 HR & 2 HR RATED SHAFT WALL

1 1/2"=1'-0"

TYPE	STUD	TOTAL WIDTH	SAFB	RATING	UL	STC	NOTES
B1	4" CH	4 5/8"	3"	1 HR	U415A	.	.
B2	4" CH	5 1/4"	3"	2 HR	U415B	.	(2) LAYER 5/8" FIRE RESISTANT GWB, (1) LAYER 1" LINER
B3	6" CH	7 1/4"	3"	1HR	U415A	.	.
B4	6" CH	7 7/8"	3"	2HR	U415B	.	(2) LAYER 5/8" FIRE RESISTANT GWB, (1) LAYER 1" LINER

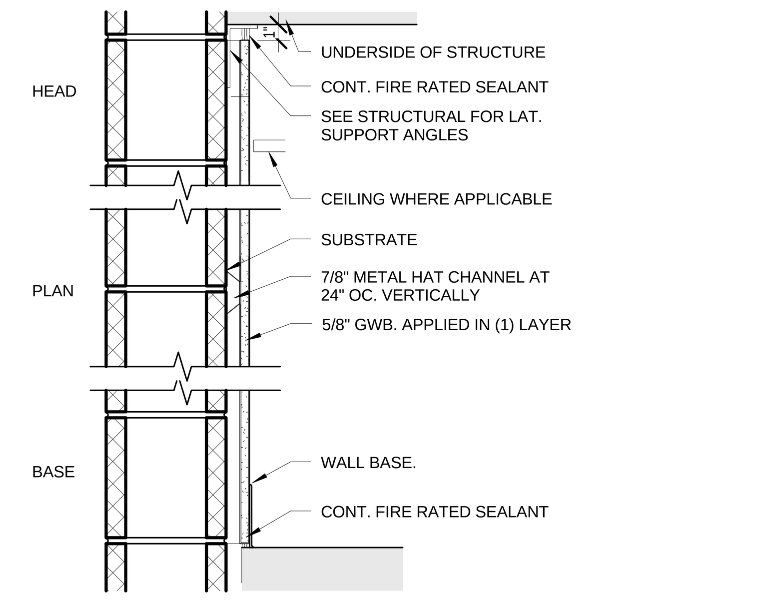

C 8" CMU

1 1/2"=1'-0"

TYPE	CMU SIZE	TOTAL WIDTH	SAFB	RATING	UL	STC	NOTES
C1	7 5/8"	7 5/8"	·	2 HR	U905	.	.
C2	7 5/8"	9 1/8"	·	2 HR	U914	.	FURRING CHANNEL, (1) LAYER 5/8" GWB ON ONE SIDE
C3	7 5/8"	10 3/4"	·	2 HR	U914	.	2 1/2" STUD, (1) LAYER 5/8" GWB ON ONE SIDE
C4	7 5/8"	11 7/8"		2 HR	U914		3 5/8" STUD, (1) LAYER 5/8" GWB ON ONE SIDE
C5	7 5/8"	9 1/8"		2 HR	U914		FURRING CHANNEL, (1) LAYER 5/8" GWB ON ONE SIDE, SMOKE BARRIER
C6	7 5/8"	11 7/8"		2 HR	U914		3 5/8" STUD, (1) LAYER 5/8" GWB ON ONE SIDE, SMOKE BARRIER

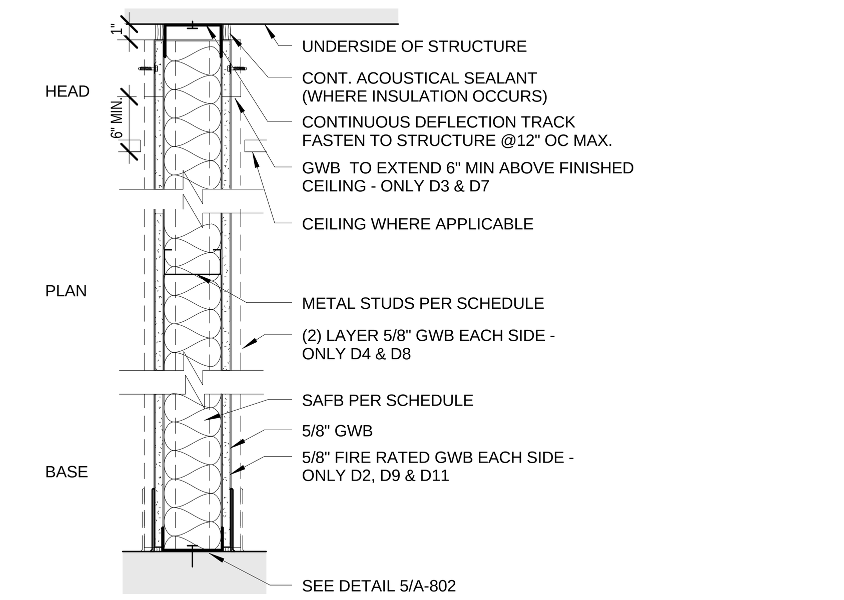

D NON-RATED PARTITION

1 1/2"=1'-0"

TYPE	STUD	TOTAL WIDTH	SAFB	RATING	UL	STC	NOTES
D1	3 5/8"	4 7/8"	.	0 HR		40	.
D2	3 5/8"	4 7/8"	3"	0 HR		45	FIRE RATED GWB
D3	3 5/8"	4 7/8"	.	0 HR		.	EXTEND GWB 6" MIN. ABOVE FINISHED CEILING
D4	3 5/8"	6 1/8"	3"	0 HR		53	(2) LAYER GWB EA. SIDE
D5	6"	7 1/4"	.	0 HR		42	.
D6	6"	7 1/4"	3"	0 HR		46	.
D7	6"	7 1/4"	.	0 HR		.	EXTEND GWB 6" MIN. ABOVE FINISHED CEILING
D8	6"	8 1/2"	3"	0 HR		55	(2) LAYER GWB EA. SIDE
D9	3 5/8"	4 7/8"	3"	0 HR		45	SMOKE BARRIER, FIRE RATED GWB
D10	3 5/8"	4 7/8"		0 HR			8'-0" HIGH PARTITION. REFER TO INTERIOR ELEVATION
D11	6"	7 1/4"	3"	0 HR		45	SMOKE BARRIER, FIRE RATED GWB

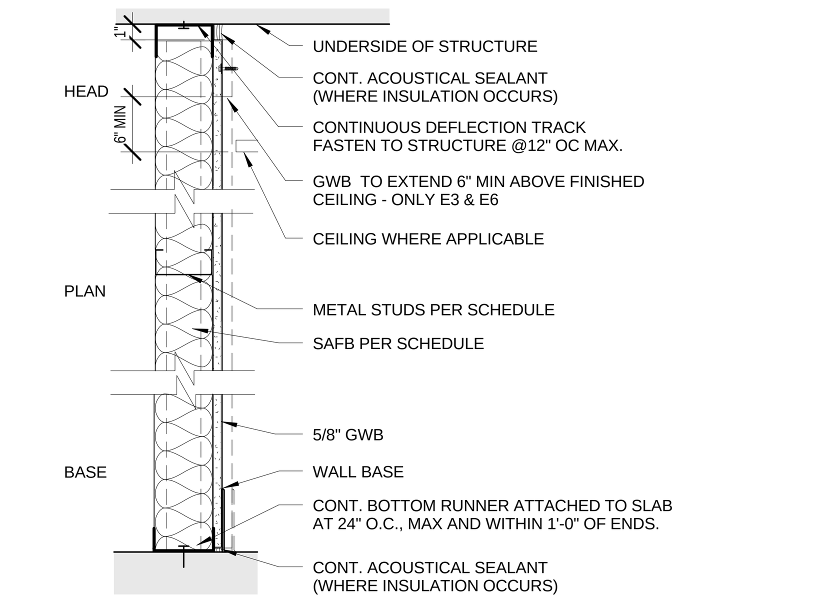

E SINGLE SIDE SELF SUPPORTED PARTITION

1 1/2"=1'-0"

TYPE	STUD	TOTAL WIDTH	SAFB	RATING	UL	STC	NOTES
E1	.	.	.	.	.	.	NOT USED
E2	3 5/8"	4 1/4"	.	0 HR	.	.	.
E3	3 5/8"	4 1/4"	.	0 HR	.	.	EXTEND GWB 6" MIN. ABOVE FINISHED CEILING
E4	3 5/8"	4 1/4"	3"	0 HR	.	.	.
E5	6"	6 5/8"	.	0 HR	.	.	.
E6	6"	6 5/8"	.	0 HR	.	.	EXTEND GWB 6" MIN. ABOVE FINISHED CEILING
E7	6"	6 5/8"	3"	0 HR	.	.	
E8	3 5/8"	4 1/8"		0 HR			SMOKE BARRIER

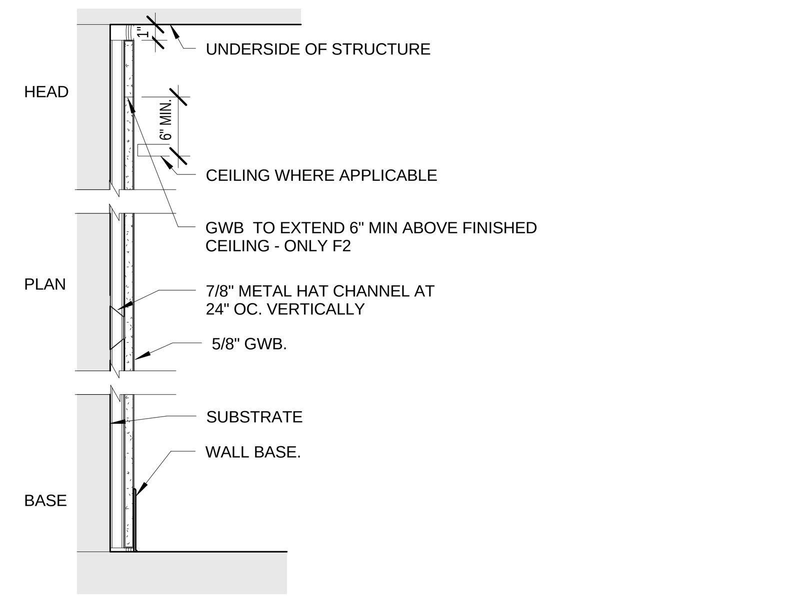

F FURRING PARTITION

1 1/2"=1'-0"

TYPE	STUD	TOTAL WIDTH	SAFB	RATING	UL	STC	NOTES
F1	7/8"	1 1/4"	.	0 HR	.	.	.
F2	7/8"	1 1/4"		0 HR			EXTEND GWB 6" ABOVE FINISH CEILING

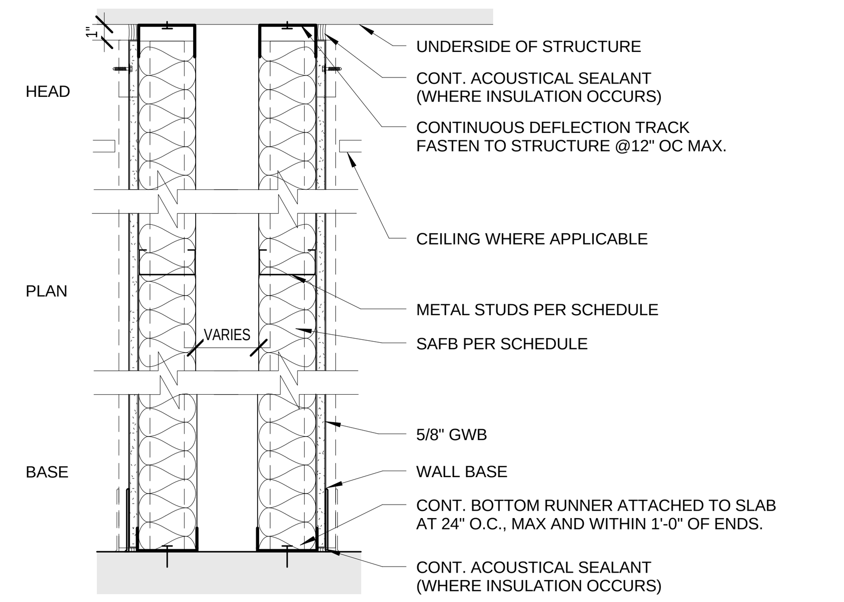

G DOUBLE CHASE PARTITION

1 1/2"=1'-0"

TYPE	STUD	TOTAL WIDTH	SAFB	RATING	UL	STC	NOTES
G1	3 5/8"	VARIES	.	0 HR		55	.
G2	3 5/8"	VARIES	3"	0 HR		59	.
G3	6"	VARIES	.	0 HR		55	
G4	6"	VARIES	3"	0 HR		59	

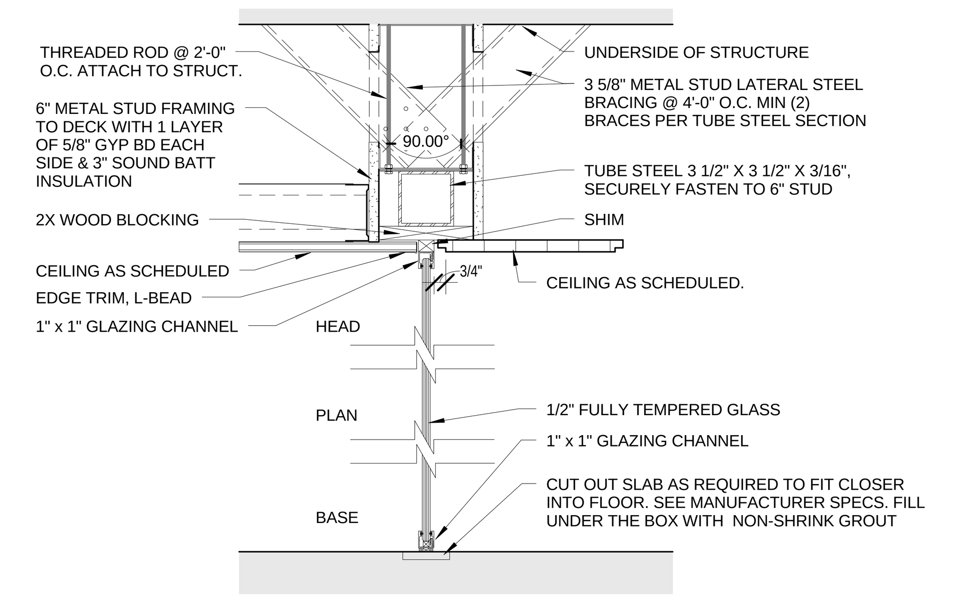

H STOREFRONT

1 1/2"=1'-0"

TYPE	STUD	TOTAL WIDTH	SAFB	RATING	UL	STC	NOTES
H1	.	.	.	.	.	.	SMOKE BARRIER, D11 PARTITION ABOVE CEILING
H2			.				D6 PARTITION ABOVE CEILING

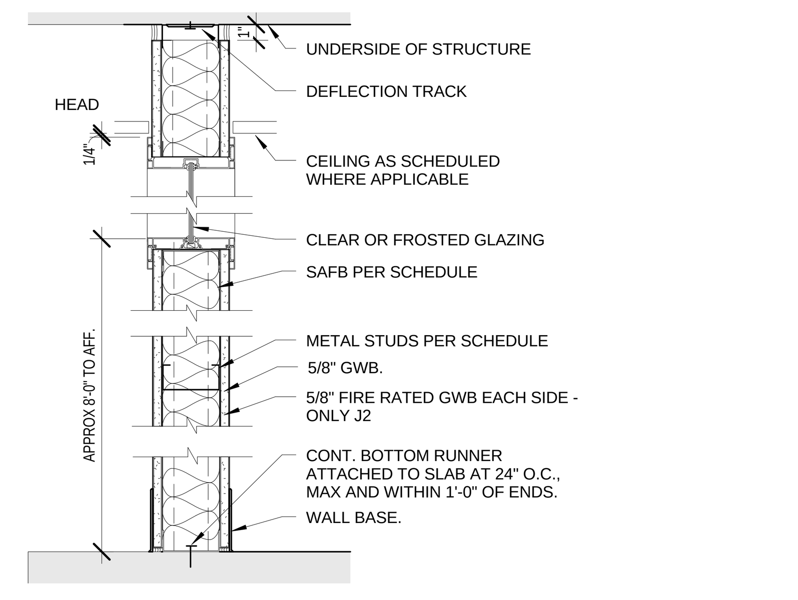

J NON-RATED PARTITION WITH CLEARSTORY

1 1/2"=1'-0"

TYPE	STUD	TOTAL WIDTH	SAFB	RATING	UL	STC	NOTES
J1	3 5/8"	4 7/8"	.	0 HR	.	44	.
J2	3 5/8"	4 7/8"	3"	0 HR		45	REFER TO INTERIOR ELEVATION FOR THE EXTENT OF CLEARSTORY. FIRE RATED GWB.

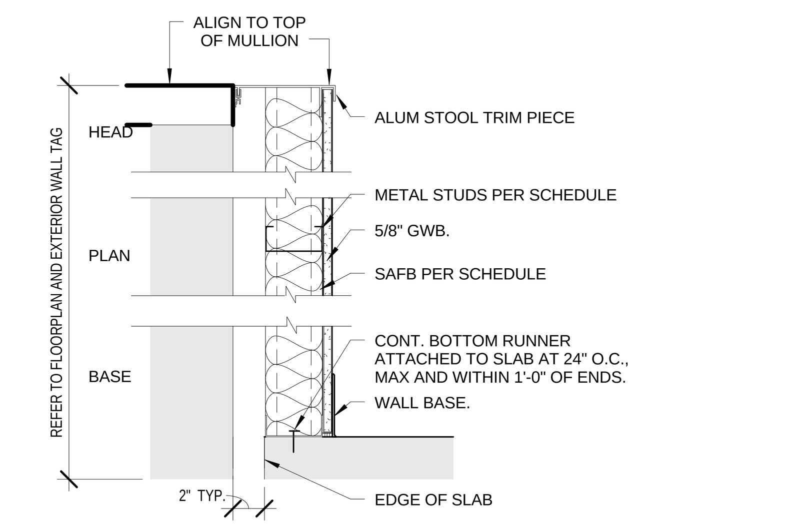

K KNEE WALL FURRING PARTITION

1 1/2"=1'-0"

TYPE	STUD	TOTAL WIDTH	SAFB	RATING	UL	STC	NOTES
K1	2 1/2"	3 1/8"	.	0 HR	.	.	.
K2	3 5/8"	4 1/4"	.	0 HR		.	
K3	3 5/8"	4 1/4"	3"	0 HR			
K4	6"	6 5/8"	.	0 HR			

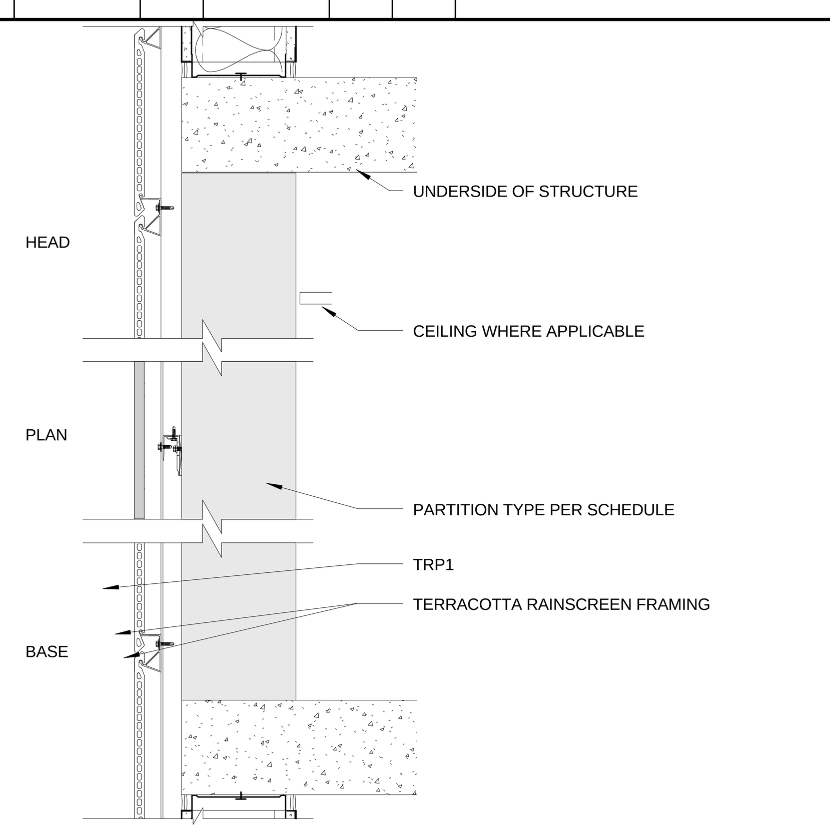

L TERRACOTTA FURRING

1 1/2"=1'-0"

TYPE	STUD	TOTAL WIDTH	SAFB	RATING	UL	STC	NOTES
L1	6"	.		.	.	.	D11 PARTITION WITH TERRACOTTA FURRING
L2	6"		.				D6 PARTITION WITH TERRACOTTA FURRING
L3	6"		.				A5 PARTITION WITH TERRACOTTA FURRING
			.				

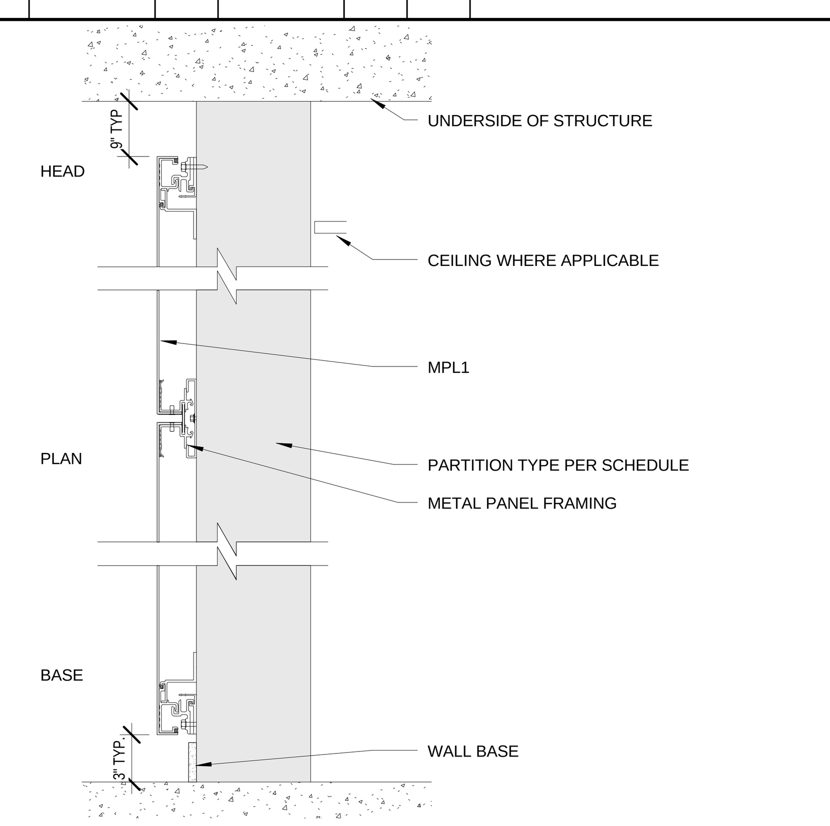

M METAL PANEL FURRING

1 1/2"=1'-0"

TYPE	STUD	TOTAL WIDTH	SAFB	RATING	UL	STC	NOTES
M1	3 5/8"	.	.	0 HR	.	.	E4 PARTITION WITH METAL PANEL FURRING
M2	6"		.	0 HR			E7 PARTITION WITH METAL PANEL FURRING
M3	6"		.	0 HR			D5 PARTITION WITH METAL PANEL FURRING
M4	3 5/8"			0 HR			G2 PARTITION WITH METAL PANEL FURRING
M5	6"			0 HR			G6 PARTITION WITH METAL PANEL FURRING

N NOT USED

TYPE	STUD	TOTAL WIDTH	SAFB	RATING	UL	STC	NOTES

GENERAL NOTES:

1. PROVIDE METAL STRAPPING, WOOD BACKING, WOOD NAILERS, STUD REINFORCEMENT, AND STUD OF 20 & 18 GA. MIN. AT ALL CASEWORK, TOILET ROOM & KITCHEN ACCESSORIES, MARKER & TACK BOARDS, DISPLAY RAILS, ETC. - SEE INTERIOR ELEVATIONS.

2. ALL FIRE RATED PARTITIONS SHALL BE CONSTRUCTED FULL HEIGHT TO & SEALED AGAINST UNDERSIDE OF DECK (UNO). PROVIDE CONTINUOUS FIRE RATED SEALANT ALL EDGES.

3. DIMENSIONS ARE FOR DESIGN PURPOSE ONLY. CONTRACTOR RO COORDINATE & FIELD VERIFY ALL FINAL DIMENSIONS.

4. VERTICAL STUDS TO BE CUT 1/2" LESS IN LENGTH THAN ASSEMBLY HEIGHT.

5. ALL NON-RATED PARTITIONS WITH SOUND BATT SHALL BE FULL-HEIGHT TO & ACOUSTICALLY SEALED AGAINST THE UNDERSIDE OF DECK (UNO). SEAL AROUND ALL PENETRATIONS, OUTLET BOXES, ETC. WITH ACOUSTICAL SEALANT.

6. FOR ALL RATED PARTITIONS, SEE MEP DRAWINGS FOR UL DETAILS FOR ALL FIRESTOPPING AT PENETRATIONS, OUTLET BOXES, ETC.

7. FOR ALL RATED PARTITIONS, OUTLET & V-BOXES ON OPPOSITE SIDES OF WALL SHALL BE SPACED A MIN. DISTANT OF 24" O.C.

8. PROVIDE ADDITIONAL FRAMING, WHERE REQUIRED FOR WALL-MOUNTED ELEMENTS, INCLUDING BUT NOT LIMITED TO: FLAT PANEL DISPLAYS, PLUMBING FIXTURES & DISPLAY CASES.

9. REFER TO FINISH PLANS AND INTERIOR ELEVATIONS FOR PARTITIONS THAT REQUIRES ADDITIONAL LAYER OF GYPSUM BOARDS.

100% SUBMITTAL

AECOM

AECOM TECHNICAL SERVICES, INC.
3101 WILSON BOULEVARD
SUITE 900
ARLINGTON, VA 22201

T: 703-682-4900 F: 703.682.4901
www.aecom.com

SEAL AREA

BOARD OF ARCHITECTS 10964 EDWARD D. WEAVER STATE OF MARYLAND

KEY PLAN

REV	DATE	DESCRIPTION	S&R BR.	CUSTOMER	PM	SECT. HEAD
A	07/31/2012	Addendum No. 1				

	INITIALS	DATE
DRAWN BY	LA/NS	
CHECKED BY	BW/MW	
A-E MANAGER	EW	
ENVIRONMENTAL BRANCH	JH	
SAFETY BRANCH	CS	
CM	MMD	
PM	RWP	
CUSTOMER	JWB	
ENG. BRANCH	DGL	

ARCHITECTURE

WALL PARTITION TYPE

A-801

FLIGHT PROJECTS BUILDING

NATIONAL AERONAUTICS AND SPACE ADMINISTRATION

GODDARD SPACE FLIGHT CENTER GREENBELT, MARYLAND
FACILITIES MANAGEMENT DIVISION

DATE ISSUED	CoF CODE OR WR#	AECOM PROJECT NO.	SCALE
10/12/2012	12GXAZ	60187636	1 1/2" = 1'-0"

FILE DATE: 10/11/2012 4:16:06 PM

P NOT USED

TYPE	FRAME	TOTAL WIDTH	SAFB	RATING	UL	STC	NOTES

Q NOT USED

TYPE	STUD	TOTAL WIDTH	SAFB	RATING	UL	STC	NOTES

R STOREFRONT PARTITION

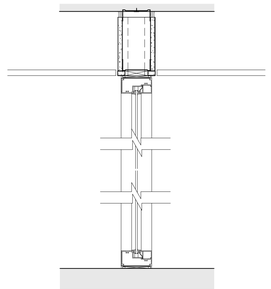

1 1/2"=1'-0"

TYPE	FRAME	TOTAL WIDTH	SAFB	RATING	UL	STC	NOTES
R1	4"	4 7/8"	'	0 HR	.	.	D1 PARTITION ABOVE CEILING
R2	4"	4 7/8"	'	0 HR		.	D2 PARTITION ABOVE CEILING
R3	4"	4 7/8"	'	0 HR		.	D3 PARTITION ABOVE CEILING
R4	4"	7 1/4"		0 HR			D5 PARTITION ABOVE CEILING
R5	4"	7 1/4"		0 HR			D6 PARTITION ABOVE CEILING
R6	4"	7 1/4"		0 HR			D7 PARTITION ABOVE CEILING

S DEMOUNTABLE STOREFRONT PARTITION

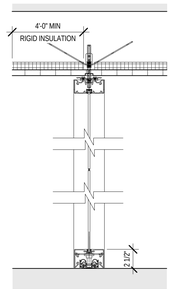

1 1/2"=1'-0"

TYPE	FRAME	TOTAL WIDTH	SAFB	RATING	UL	STC	NOTES
S1	4"	4"	.	0 HR	.	.	.

T DEMOUNTABLE PARTITION

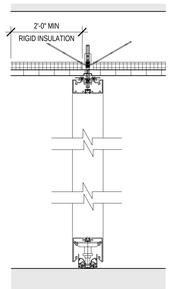

TYPE	FRAME	TOTAL WIDTH	SAFB	RATING	UL	STC	NOTES
T1	4"	4"	.	0 HR	.	.	.

GENERAL NOTES:

1. PROVIDE METAL STRAPPING, WOOD BACKING, WOOD NAILERS, STUD REINFORCEMENT, AND STUD OF 20 & 18 GA. MIN. AT ALL CASEWORK, TOILET ROOM & KITCHEN ACCESSORIES, MARKER & TACK BOARDS, DISPLAY RAILS, ETC. - SEE INTERIOR ELEVATIONS.

2. ALL FIRE RATED PARTITITIONS SHALL BE CONSTRUCTED FULL HEIGHT TO & SEALED AGAINST UNDERSIDE OF DECK (UNO). PROVIDE CONTINUOUS FIRE RATED SEALANT ALL EDGES.

3. DIMENSIONS ARE FOR DESIGN PURPOSE ONLY. CONTRACTOR RO COORDINATE & FIELD VERIFY ALL FINAL DIMENSIONS.

4. VERTICAL STUDS TO BE CUT 1/2" LESS IN LENGTH THAN ASSEMBLY HEIGHT.

5. ALL NON-RATED PARTITIONS WITH SOUND BATT SHALL BE FULL-HEIGHT TO & ACOUSTICALLY SEALED AGAINST THE UNDERSIDE OF DECK (UNO). SEAL AROUND ALL PENETRATIONS, OUTLET BOXES, ETC. WITH ACOUSTICAL SEALANT.

6. FOR ALL RATED PARTITIONS, SEE MEP DRAWINGS FOR UL DETAILS FOR ALL FIRESTOPPING AT PENETRATIONS, OUTLET BOXES, ETC.

7. FOR ALL RATED PARTITIONS, OUTLET & V-BOXES ON OPPOSITE SIDES OF WALL SHALL BE SPACED A MIN. DISTANT OF 24" O.C.

8. PROVIDE ADDITIONAL FRAMING, WHERE REQUIRED FOR WALL-MOUNTED ELEMENTS, INCLUDING BUT NOT LIMITED TO: FLAT PANEL DISPLAYS, PLUMBING FIXTURES & DISPLAY CASES.

9. REFER TO FINISH PLANS AND INTERIOR ELEVATIONS FOR PARTITIONS THAT REQUIRES ADDITIONAL LAYER OF GYPSUM BOARDS.

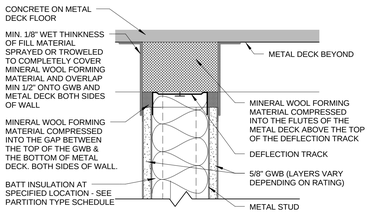

2 PARTITION HEAD DETAIL @ METAL DECK 1 & 2 HOUR FIRE RATED

A-802 REF. SCALE: 3" = 1'-0"

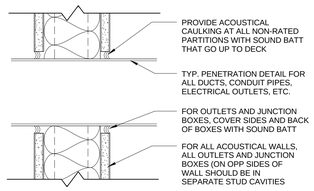

3 ACOUSTICAL PENETRATION DETAIL

A-802 REF. SCALE: 3" = 1'-0"

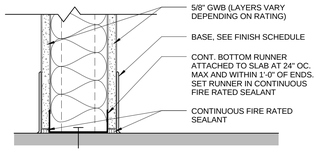

4 BASE DETAIL AT RATED PARTITION

A-802 REF. SCALE: 3" = 1'-0"

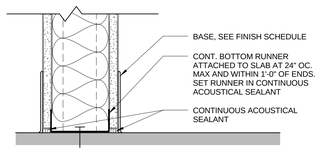

5 BASE DETAIL AT NON-RATED PARTITION WITH SOUND BATT

A-802 REF. SCALE: 3" = 1'-0"

100% SUBMITTAL

AECOM
AECOM TECHNICAL SERVICES, INC.
3101 WILSON BOULEVARD
SUITE 900
ARLINGTON, VA 22201
T: 703-682-4900 F: 703.682.4901
www.aecom.com

SEAL AREA

BOARD OF ARCHITECTS
EDWARD J. WEBER
STATE OF MARYLAND
10094

KEY PLAN

REV	DATE	DESCRIPTION	S&R BR.	CUSTOMER	PM	SECT. HEAD

	INITIALS	DATE
DRAWN BY	LA/NS	
CHECKED BY	BW/MW	
A-E MANAGER	EW	
ENVIRONMENTAL BRANCH	JH	
SAFETY BRANCH	CS	
CM	MMD	
PM	RWP	
CUSTOMER	JWB	
ENG. BRANCH	DGL	

WALL PARTITION TYPE

A-802

FLIGHT PROJECTS BUILDING

NATIONAL AERONAUTICS AND SPACE ADMINISTRATION
GODDARD SPACE FLIGHT CENTER GREENBELT, MARYLAND
FACILITIES MANAGEMENT DIVISION

ARCHITECTURE	DATE ISSUED	CoF CODE OR WR#	AECOM PROJECT NO.	SCALE
	10/12/2012	12GXAZ	60187636	As indicated

FILE DATE: 10/11/2012 4:16:17 PM

Door Schedule

Door No.	Room Name	Door Type	Frame Type	Opening Width	Opening Height	Thickness	Fire Rating	Door Mtrl	Door Finish	Frame Mtrl	Frame Finish	Head Detail	Jamb Detail	Sill Detail	Hardware Grp.	Comments
C100A	ENTRY	F	F	6' - 0"	9' - 8"			Glass					H-04		420	Smoke Barrier
C100B	ENTRY	F	F	6' - 0"	9' - 8"			Glass					H-04		425	Smoke Barrier, Card Reader
C102	VESTIBULE	SF-1	SF-1	6' - 0"	9' - 0"			Glass	Match Curtain Wall	Alum	Match Curtain Wall	H-03	J-03	S-01	422	Power Assist
C102A	VESTIBULE	SF-1	SF-1	6' - 0"	9' - 0"			Glass	Match Curtain Wall	Alum	Match Curtain Wall	H-03	J-03		442	Card Reader, Power Assist
C103	CART STORAGE ROOM	B	B	6' - 0"	8' - 0"	0' - 1 3/4"		Wood		Alum		3/A-946	4/A-946		822	
C104	WOMEN	A	A	3' - 0"	8' - 0"	0' - 1 3/4"		Wood		Alum		3/A-946	4/A-946		210	
C105	MEN	A	A	3' - 0"	8' - 0"	0' - 1 3/4"		Wood		Alum		3/A-946	4/A-946		210	
C106	JANITOR	A	A	3' - 0"	8' - 0"	0' - 1 3/4"		Wood		Alum		3/A-946	4/A-946		812	
C107	SHOWER	A	A	3' - 0"	8' - 0"	0' - 1 3/4"		Wood		Alum		3/A-946	4/A-946		113	
C108	VENDING			5' - 10"	9' - 0"	0' - 1 3/4"										
C108A	STORAGE	A	A	3' - 0"	8' - 0"	0' - 1 3/4"		Wood		Alum		3/A-946	4/A-946		810	
C109	MAIL ROOM			5' - 7 1/4"	8' - 0"	0' - 1 3/4"										
C110	MECH PUMP	B	B	6' - 0"	7' - 0"	0' - 1 3/4"		Metal	Match Metal Panel	Metal	Match Metal Panel				827	Door Contact Alarm
C111	FP/PLUMB ROOM	B	B	6' - 0"	9' - 0"	0' - 1 3/4"		Metal	Match Metal Panel	Metal	Match Metal Panel				826	Door Contact Alarm
C112	MECH PUMP	A	A	3' - 6"	7' - 0"	0' - 1 3/4"	45 min	Metal		Metal		H-02	J-02		311	Door Contact Alarm
C112A	SWITCHGEAR/ ELECTRICAL ROOM	B	B	6' - 0"	9' - 0"	0' - 1 3/4"		Metal	Match Metal Panel	Metal	Match Metal Panel				327	Door Contact Alarm
C113	VESTIBULE	SF-1	SF-1	6' - 0"	9' - 0 1/2"			Glass	Match Curtain Wall	Alum	Match Curtain Wall	H-03	J-03	S-01	422	Power Assist
C113A	VESTIBULE	SF-1	SF-1	6' - 0"	9' - 0 1/2"			Glass	Match Curtain Wall	Alum	Match Curtain Wall	H-03	J-03	S-01	442	Card Reader, Power Assist
C115	TELECOM	A	A	3' - 0"	8' - 0"	0' - 1 3/4"		Wood		Alum		3/A-946	4/A-946		815	Card Reader
C200A	ENTRY	F	F	6' - 0"	9' - 8"			Glass					H-04		420	Smoke Barrier
C200B	ENTRY	F	F	6' - 0"	9' - 8"			Glass					H-04		420	Smoke Barrier
C202	CONF ROOM	SF-1	SF-1	3' - 0"	8' - 0"			Glass	Match Curtain Wall	Alum	Match Curtain Wall	H-03	J-03		410	
C203	QUIET ROOM	A	A	3' - 0"	8' - 0"	0' - 1 3/4"		Wood		Alum		3/A-946	4/A-946		112	
C204	WOMEN	A	A	3' - 0"	8' - 0"	0' - 1 3/4"		Wood		Alum		3/A-946	4/A-946		210	
C205	MEN	A	A	3' - 0"	8' - 0"	0' - 1 3/4"		Wood		Alum		3/A-946	4/A-946		210	
C206	JANITOR	A	A	3' - 0"	8' - 0"	0' - 1 3/4"		Wood		Alum		3/A-946	4/A-946		812	
C207	SHOWER	A	A	3' - 0"	8' - 0"	0' - 1 3/4"		Wood		Alum		3/A-946	4/A-946		113	
C208	ENTRY			5' - 10"	9' - 0"	0' - 1 3/4"										
C208A	STORAGE	A	A	3' - 0"	8' - 0"	0' - 1 3/4"		Wood		Alum		3/A-946	4/A-946		810	
C208B	STORAGE	A	A	3' - 0"	8' - 0"	0' - 1 3/4"		Wood		Alum		3/A-946	4/A-946		810	
C209	STORAGE	A	A	3' - 0"	8' - 0"	0' - 1 3/4"		Wood		Alum		3/A-946	4/A-946		810	
C211	SYMPOSIUM	C	Frameless	6' - 0"	8' - 0"	0' - 1 3/4"		Wood		N/A		7/A-946			325	Card Reader
C211A	STORAGE	D	Frameless	6' - 0"	8' - 0"	0' - 1 3/4"		Wood		N/A		12/A-946		12/A-946	120	
C211B	STORAGE	D	Frameless	6' - 0"	8' - 0"	0' - 1 3/4"		Wood		N/A		12/A-946		12/A-946	120	
C211C	STORAGE	D	Frameless	6' - 0"	8' - 0"	0' - 1 3/4"		Wood		N/A		12/A-946		12/A-946	120	
C211D	SYMPOSIUM	A	Frameless	3' - 0"	8' - 0"	0' - 1 3/4"		Metal		N/A					315	Card Reader
C212	VEST.	SF-1	SF-1	6' - 0"	9' - 0 1/2"			Glass	Match Curtain Wall	Alum	Match Curtain Wall	H-03	J-03		422	Card Reader, Power Assist
C212A	LOBBY	SF-1	SF-1	6' - 0"	9' - 1 1/2"			Glass	Match Curtain Wall	Alum	Match Curtain Wall	H-03	J-03		442	Power Assist
C215	TELECOM	A	A	3' - 0"	8' - 0"	0' - 1 3/4"		Wood		Aum		3/A-946	4/A-946		815	Card Reader
C300A	ENTRY	F	F	6' - 0"	9' - 8"			Glass					H-04		421	Smoke Barrier, Double Acting
C300B	ENTRY	F	F	6' - 0"	9' - 8"			Glass					H-04		420	Smoke Barrier, Double Acting
C300C	LOBBY	SF-1	SF-1	3' - 0"	8' - 10 3/4"			Glass	Match Curtain Wall	Alum	Match Curtain Wall				413	Door Contact Alarm
C302	CONF ROOM	SF-1	SF-1	3' - 0"	8' - 0"			Glass	Match Curtain Wall	Alum	Match Curtain Wall	H-03	J-03		410	
C303	STORAGE	A	A	3' - 0"	8' - 0"	0' - 1 3/4"		Wood		Alum		3/A-946	4/A-946		810	
C304	WOMEN	A	A	3' - 0"	8' - 0"	0' - 1 3/4"		Wood		Alum		3/A-946	4/A-946		210	
C305	MEN	A	A	3' - 0"	8' - 0"	0' - 1 3/4"		Wood		Alum		3/A-946	4/A-946		210	
C306	JANITOR	A	A	3' - 0"	8' - 0"	0' - 1 3/4"		Wood		Alum		3/A-946	4/A-946		812	
C307	STORAGE	A	A	3' - 0"	8' - 0"	0' - 1 3/4"		Wood		Alum		3/A-946	4/A-946		810	
C308	ENTRY			5' - 10"	9' - 0"	0' - 1 3/4"										
C308A	STORAGE	A	A	3' - 0"	8' - 0"	0' - 1 3/4"		Wood		Alum		3/A-946	4/A-946		810	
C308B	STORAGE	A	A	3' - 0"	8' - 0"	0' - 1 3/4"		Wood		Alum		3/A-946	4/A-946		810	
C315	TELECOM	A	A	3' - 0"	8' - 0"	0' - 1 3/4"		Wood		Alum					815	Card Reader
C400A	ENTRY	F	F	6' - 0"	9' - 8"			Glass					H-04		421	Smoke Barrier, Double Acting
C400B	ENTRY	F	F	6' - 0"	9' - 8"			Glass					H-04		421	Smoke Barrier, Double Acting
C402	CONF ROOM	SF-1	SF-1	3' - 0"	8' - 0"			Glass	Match Curtain Wall	Alum	Match Curtain Wall	H-03	J-03		410	Match Curtian Wall
C403	STORAGE	A	A	3' - 0"	8' - 0"	0' - 1 3/4"		Wood		Alum		3/A-946	4/A-946		810	
C404	WOMEN	A	A	3' - 0"	8' - 0"	0' - 1 3/4"		Wood		Alum		3/A-946	4/A-946		210	
C405	MEN	A	A	3' - 0"	8' - 0"	0' - 1 3/4"		Wood		Alum		3/A-946	4/A-946		210	
C406	JANITOR	A	A	3' - 0"	8' - 0"	0' - 1 3/4"		Wood		Alum		3/A-946	4/A-946		812	
C407	STORAGE	A	A	3' - 0"	8' - 0"	0' - 1 3/4"		Wood		Alum		3/A-946	4/A-946		810	
C408	ENTRY			5' - 10"	9' - 0"	0' - 1 3/4"										
C408A	STORAGE	A	A	3' - 0"	8' - 0"	0' - 1 3/4"		Wood		Alum		3/A-946	4/A-946		810	
C408B	STORAGE	A	A	3' - 0"	8' - 0"	0' - 1 3/4"		Wood		Alum		3/A-946	4/A-946		810	
C415	TELECOM	A	A	3' - 0"	8' - 0"	0' - 1 3/4"		Wood		N/A					815	Card Reader
C500	PENTHOUSE	B	B	6' - 0"	8' - 0"	0' - 1 3/4"		Metal	Match Metal Panel	Metal	Match Metal Panel				828	Door Contact Alarm
C500A	PENTHOUSE	A	A	3' - 0"	8' - 0"	0' - 1 3/4"		Metal	Match Metal Panel	Metal	Match Metal Panel				816	
C501	PENTHOUSE	A	A	4' - 0"	8' - 0"	0' - 1 3/4"	90 min	Metal		Metal		H-02	J-02		811	
C502	O&M ROOM	A	A	3' - 0"	7' - 0"	0' - 1 3/4"		Metal		Metal		3/A-946	4/A-946		810	
C601		A	A	3' - 0"	7' - 0"	0' - 1 3/4"	90 min	Metal		Metal	Match Metal Panel	H-02	J-02		817	Door Contact Alarm
N104	PLANNING ROOM	A	C	3' - 0"	8' - 0"	0' - 1 3/4"		Wood		Alum		10/A-946	4/A-946		815	Card Reader
N106	WORK ROOM	A	C	3' - 0"	8' - 0"	0' - 1 3/4"		Wood		Alum		10/A-946	4/A-946		815	Card Reader
N107	CONF. ROOM	A	E	3' - 0"	8' - 0"	0' - 1 3/4"		Wood		Alum		10/A-946	4/A-946		114	
N107A	CONF. ROOM	A	E	3' - 0"	8' - 0"	0' - 1 3/4"		Wood		Alum		10/A-946	4/A-946		114	
N108	OFFICE	A	C	3' - 0"	8' - 0"	0' - 1 3/4"		Wood		Alum		10/A-946	4/A-946		510	
N109	WORK ROOM	A	C	3' - 0"	8' - 0"	0' - 1 3/4"		Wood		Alum		10/A-946	4/A-946		815	Card Reader
N111	IT	A	C	3' - 0"	8' - 0"	0' - 1 3/4"		Wood		Alum		10/A-946	4/A-946		510	
N111A	IT RM	A	A	3' - 0"	8' - 0"	0' - 1 3/4"		Wood		Alum		3/A-946	4/A-946		810	
N112	PLANNING ROOM	A	C	3' - 0"	8' - 0"	0' - 1 3/4"		Wood		Alum		10/A-946	4/A-946		815	Card Reader
N114	OFFICE	A	C	3' - 0"	8' - 0"	0' - 1 3/4"		Wood		Alum		10/A-946	4/A-946		510	
N116	WORK ROOM	A	C	3' - 0"	8' - 0"	0' - 1 3/4"		Wood		Alum		10/A-946	4/A-946		815	Card Reader
N117	STORAGE	A	C	3' - 0"	8' - 0"	0' - 1 3/4"		Wood		Alum		10/A-946	4/A-946		810	
N118	PLANNING ROOM	A	C	3' - 0"	8' - 0"	0' - 1 3/4"		Wood		Alum		10/A-946	4/A-946		815	Card Reader
N130	CIRCULATION	A	A	3' - 0"	8' - 0"	0' - 1 3/4"		Glass		Alum		10/A-946	4/A-946		815	Card Reader
N130A	OFFICE	A	C	3' - 0"	8' - 0"	0' - 1 3/4"		Wood		Alum		10/A-946	4/A-946		510	
N130B	OFFICE	A	C	3' - 0"	8' - 0"	0' - 1 3/4"		Wood		Alum		10/A-946	4/A-946		510	
N130C	GRAPHICS	A	C	3' - 0"	8' - 0"	0' - 1 3/4"		Wood		Alum		10/A-946	4/A-946		710	
N130D	TEMP OFFICE	A	C	3' - 0"	8' - 0"	0' - 1 3/4"		Wood		Alum		10/A-946	4/A-946		510	
N130E	OFFICE	A	C	3' - 0"	8' - 0"	0' - 1 3/4"		Wood		Alum		10/A-946	4/A-946		510	
N130F	OFFICE	A	C	3' - 0"	8' - 0"	0' - 1 3/4"		Wood		Alum		10/A-946	4/A-946		510	
N130H	PROPOSAL LIB	A	C	3' - 0"	8' - 0"	0' - 1 3/4"		Wood		Alum		10/A-946	4/A-946		510	
N130I	OFFICE	A	C	3' - 0"	8' - 0"	0' - 1 3/4"		Wood		Alum		10/A-946	4/A-946		510	

Door Schedule

Door No.	Room Name	Door Type	Frame Type	Opening Width	Opening Height	Thickness	Fire Rating	Door Mtrl	Door Finish	Frame Mtrl	Frame Finish	Head Detail	Jamb Detail	Sill Detail	Hardware Grp.	Comments
N130J	PRODUCTION RM	B	D	6' - 0"	8' - 0"	0' - 1 3/4"		Wood		Alum		10/A-946	4/A-946		723	
N130K	PRODUCTION RM	A	C	3' - 0"	8' - 0"	0' - 1 3/4"		Wood		Alum		10/A-946	4/A-946		713	
N130L	CIRCULATION	A	A	3' - 0"	8' - 0"	0' - 1 3/4"		Wood		Alum		10/A-946	4/A-946		815	Card Reader
N140	STAIR 1	SF-1	SF-1	6' - 0"	9' - 1 1/2"			Glass	Match Curtain Wall	Alum	Match Curtain Wall				441	Card Reader
N140A	STAIR 1	A	A	3' - 6"	8' - 0"	0' - 1 3/4"	90 min	Wood		Metal		H-02	J-02		313	Card Reader, Fail Safe
N144	PLANNING ROOM	A	C	3' - 0"	8' - 0"	0' - 1 3/4"		Wood		Alum		10/A-946	4/A-946		815	Card Reader
N146	WORK ROOM	A	C	3' - 0"	8' - 0"	0' - 1 3/4"		Wood		Alum		10/A-946	4/A-946		815	Card Reader
N147	ELEC ROOM	A	A	3' - 0"	8' - 0"	0' - 1 3/4"		Wood		Metal		3/A-946	4/A-946		811	
N148	OFFICE	A	C	3' - 0"	8' - 0"	0' - 1 3/4"		Wood		Alum		10/A-946	4/A-946		510	
N149	WORK ROOM	A	C	3' - 0"	8' - 0"	0' - 1 3/4"		Wood		Alum		10/A-946	4/A-946		815	Card Reader
N150	PLANNING ROOM	A	C	3' - 0"	8' - 0"	0' - 1 3/4"		Wood		Alum		10/A-946	4/A-946		815	Card Reader
N151	TEMP ROOM	A	C	3' - 0"	8' - 0"	0' - 1 3/4"		Wood		Alum		10/A-946	4/A-946		510	
N154	OFFICE	A	C	3' - 0"	8' - 0"	0' - 1 3/4"		Wood		Alum		10/A-946	4/A-946		510	
N156	WORK ROOM	A	C	3' - 0"	8' - 0"	0' - 1 3/4"		Wood		Alum		10/A-946	4/A-946		815	Card Reader
N158	PLANNING ROOM	A	C	3' - 0"	8' - 0"	0' - 1 3/4"		Wood		Alum		10/A-946	4/A-946		815	Card Reader
N202I	OFFICE	I-A	I-A	3' - 0"	8' - 0"	0' - 1 3/4"		Wood		Alum			9/A-937		500	Provided by Demountable Vendor
N204I	OFFICE	I-A	I-A	3' - 0"	8' - 0"	0' - 1 3/4"		Wood		Alum			7/A-937		500	Provided by Demountable Vendor
N206I	OFFICE	I-A	I-A	3' - 0"	8' - 0"	0' - 1 3/4"		Wood		Alum			7/A-937		500	Provided by Demountable Vendor
N207	CONF ROOM	A	C	3' - 0"	8' - 0"	0' - 1 3/4"		Wood		Alum		10/A-946	4/A-946		114	
N207A	CONF ROOM	A	C	3' - 0"	8' - 0"	0' - 1 3/4"		Wood		Alum		10/A-946	4/A-946		114	
N209I	OFFICE	I-A	I-A	2' - 10"	8' - 0"	0' - 1 3/4"		Wood		Alum			7/A-937		500	Provided by Demountable Vendor
N211I	OFFICE	I-A	I-A	3' - 0"	8' - 0"	0' - 1 3/4"		Wood		Alum			7/A-937		500	Provided by Demountable Vendor
N213I	OFFICE	I-A	I-A	3' - 0"	8' - 0"	0' - 1 3/4"		Wood		Alum			9/A-937		500	Provided by Demountable Vendor
N215	STORAGE	A	C	3' - 0"	8' - 0"	0' - 1 3/4"		Wood		Alum		10/A-946	4/A-946		810	
N223I	SMALL CONF	I-A	I-A	3' - 0"	8' - 0 1/2"	0' - 1 3/4"		Wood		Alum			9/A-937		100	Provided by Demountable Vendor
N230	CIRCULATION	E	E	3' - 0"	8' - 0"			Glass		Alum		10/A-946	4/A-946		411	
N230B	OFFICE	A	C	3' - 0"	7' - 0"	0' - 1 3/4"		Wood		Alum		10/A-946	4/A-946		510	
N230C	OFFICE	A	C	3' - 0"	7' - 0"	0' - 1 3/4"		Wood		Alum		10/A-946	4/A-946		510	
N230D	OFFICE	A	C	3' - 0"	7' - 0"	0' - 1 3/4"		Wood		Alum		10/A-946	4/A-946		510	
N230E	OFFICE	A	C	3' - 0"	7' - 0"	0' - 1 3/4"		Wood		Alum		10/A-946	4/A-946		510	
N230F	OFFICE	A	C	3' - 0"	7' - 0"	0' - 1 3/4"		Wood		Alum		10/A-946	4/A-946		510	
N230G	CIRCULATION	E	E	2' - 11"	8' - 0"			Glass		Alum		10/A-946	4/A-946		411	
N240	STAIR 1	A	A	3' - 6"	8' - 0"	0' - 1 3/4"	90 min	Wood		Metal		H-02	J-02		310	
N241I	SMALL CONF	I-A	I-A	3' - 0"	8' - 0 1/2"	0' - 1 3/4"		Wood		Alum		10/A-946	4/A-946		100	Provided by Demountable Vendor
N247	ELEC ROOM	A	A	3' - 0"	8' - 0"	0' - 1 3/4"		Wood		Metal		3/A-946	4/A-946		811	
N249I	OFFICE	I-A	I-A	3' - 0"	8' - 0"	0' - 1 3/4"		Wood		Alum			9/A-937		500	Provided by Demountable Vendor
N251	CIRCULATION	I-A	I-A	3' - 0"	8' - 0"	0' - 1 3/4"		Wood		Alum			9/A-937		500	Provided by Demountable Vendor
N254I	OFFICE	I-A	I-A	3' - 0"	8' - 0"	0' - 1 3/4"		Wood		Alum			7/A-937		500	Provided by Demountable Vendor
N256I	OFFICE	I-A	I-A	3' - 0"	8' - 0"	0' - 1 3/4"		Wood		Alum			7/A-937		500	Provided by Demountable Vendor
N258I	OFFICE	I-A	I-A	3' - 0"	8' - 0"	0' - 1 3/4"		Wood		Alum			9/A-937		500	Provided by Demountable Vendor
N302I	OFFICE	I-A	I-A	3' - 0"	8' - 0"	0' - 1 3/4"		Wood		Alum			9/A-937		500	Provided by Demountable Vendor
N307	CONF ROOM	A	C	3' - 0"	8' - 0"	0' - 1 3/4"		Wood		Alum		10/A-946	4/A-946		114	
N307A	CONF ROOM	A	C	3' - 0"	8' - 0"	0' - 1 3/4"		Wood		Alum		10/A-946	4/A-946		114	
N309I	OFFICE	I-A	I-A	3' - 0"	8' - 0"	0' - 1 3/4"		Wood		Alum			7/A-937		500	Provided by Demountable Vendor
N311I	OFFICE	I-A	I-A	3' - 0"	8' - 0"	0' - 1 3/4"		Wood		Alum			7/A-937		500	Provided by Demountable Vendor
N313I	OFFICE	I-A	I-A	3' - 0"	8' - 0"	0' - 1 3/4"		Wood		Alum			9/A-937		500	Provided by Demountable Vendor
N315	STORAGE	A	C	3' - 0"	8' - 0"	0' - 1 3/4"		Wood		Alum		10/A-946	4/A-946		810	
N323I	SMALL CONF	I-A	I-A	3' - 0"	8' - 0 1/2"	0' - 1 3/4"		Wood		Alum			9/A-937		100	Provided by Demountable Vendor
N340	STAIR 1	A	A	3' - 6"	8' - 0"	0' - 1 3/4"	90 min	Wood		Metal		H-02	J-02		310	
N341I	SMALL CONF	I-A	I-A	3' - 0"	8' - 0 1/2"	0' - 1 3/4"		Wood		Alum			9/A-937		100	Provided by Demountable Vendor
N347	ELEC ROOM	A	A	3' - 0"	8' - 0"	0' - 1 3/4"		Wood		Metal		3/A-946	4/A-946		811	
N349I	OFFICE	I-A	I-A	3' - 0"	8' - 0"	0' - 1 3/4"		Wood		Alum			9/A-937		500	Provided by Demountable Vendor
N351	OFFICE	I-A	I-A	3' - 0"	8' - 0"	0' - 1 3/4"		Wood		Alum			9/A-937		500	Provided by Demountable Vendor
N352I	OFFICE	I-A	I-A	3' - 0"	8' - 0"	0' - 1 3/4"		Wood		Alum			9/A-937		500	Provided by Demountable Vendor
N402I	OFFICE	I-A	I-A	2' - 10 7/8"	8' - 0"	0' - 1 3/4"		Wood		Alum			7/A-937		500	Provided by Demountable Vendor
N407	CONF ROOM	A	C	3' - 0"	8' - 0"	0' - 1 3/4"		Wood		Alum		10/A-946	4/A-946		114	
N407A	CIRCULATION	A	C	3' - 0"	8' - 0"	0' - 1 3/4"		Wood		Alum		10/A-946	4/A-946		114	
N409I	OFFICE	I-A	I-A	3' - 0"	8' - 0"	0' - 1 3/4"		Wood		Alum			7/A-937		500	Provided by Demountable Vendor
N411I	OFFICE	I-A	I-A	3' - 0"	8' - 0"	0' - 1 3/4"		Wood		Alum			7/A-937		500	Provided by Demountable Vendor
N413I	OFFICE	I-A	I-A	3' - 0"	8' - 0"	0' - 1 3/4"		Wood		Alum			9/A-937		500	Provided by Demountable Vendor
N415	STORAGE	A	C	3' - 0"	8' - 0"	0' - 1 3/4"		Wood		Alum		10/A-946	4/A-946		810	
N423I	SMALL CONF	I-A	I-A	3' - 0"	8' - 0 1/2"	0' - 1 3/4"		Wood		Alum			9/A-937		100	Provided by Demountable Vendor
N440	STAIR 1	A	A	3' - 6"	8' - 0"	0' - 1 3/4"	90 min	Wood		Metal		H-02	J-02		310	
N441I	SMALL CONF	I-A	I-A	3' - 0"	8' - 0 1/2"	0' - 1 3/4"		Wood		Alum			9/A-937		100	Provided by Demountable Vendor
N447	ELEC ROOM	A	A	3' - 0"	8' - 0"	0' - 1 3/4"		Wood		Metal		3/A-946	4/A-946		811	
N449I	OFFICE	I-A	I-A	3' - 0"	8' - 0"	0' - 1 3/4"		Wood		Alum			9/A-937		500	Provided by Demountable Vendor
N451I	OFFICE	I-A	I-A	3' - 0"	8' - 0"	0' - 1 3/4"		Wood		Alum			9/A-937		500	Provided by Demountable Vendor
N458I	OFFICE	I-A	I-A	3' - 0"	8' - 0"	0' - 1 3/4"		Wood		Alum			9/A-937		500	Provided by Demountable Vendor
N540	STAIR 1	A	A	3' - 0"	7' - 0"	0' - 1 3/4"	90 min	Metal		Metal					818	Fail Safe, Door Control Alarm
S102I	OFFICE	I-A	I-A	3' - 0"	8' - 0"	0' - 1 3/4"		Wood		Alum			9/A-937		500	Provided by Demountable Vendor
S104I	OFFICE	I-A	I-A	3' - 0"	8' - 0"	0' - 1 3/4"		Wood		Alum			7/A-937		500	Provided by Demountable Vendor
S106I	OFFICE	I-A	I-A	3' - 0"	8' - 0"	0' - 1 3/4"		Wood		Alum			9/A-937		500	Provided by Demountable Vendor
S107	CONF ROOM	A	C	3' - 0"	8' - 0"	0' - 1 3/4"		Wood		Alum		10/A-946	4/A-946		114	
S107A	CONF ROOM	A	C	3' - 0"	8' - 0"	0' - 1 3/4"		Wood		Alum		10/A-946	4/A-946		114	
S109I	OFFICE	I-A	I-A	3' - 0"	8' - 1"	0' - 1 3/4"		Wood		Alum			7/A-937		500	Provided by Demountable Vendor
S111I	OFFICE	I-A	I-A	3' - 0"	8' - 0"	0' - 1 3/4"		Wood		Alum			7/A-937		500	Provided by Demountable Vendor
S113I	OFFICE	I-A	I-A	3' - 0"	8' - 0"	0' - 1 3/4"		Wood		Alum			9/A-937		500	Provided by Demountable Vendor
S115	STORAGE	A	C	3' - 0"	8' - 0"	0' - 1 3/4"		Wood		Alum		10/A-946	4/A-946		810	
S123	SMALL CONF	A	A	3' - 0"	8' - 0"	0' - 1 3/4"		Wood		Alum		3/A-946	4/A-946		114	
S123I	SMALL CONF	I-A	I-A	3' - 0"	8' - 0 1/2"	0' - 1 3/4"		Wood		Alum			9/A-937		100	Provided by Demountable Vendor
S130	CIRCULATION	E	E	2' - 11"	8' - 0"			Glass		Alum		10/A-946	4/A-946		411	
S130B	OFFICE	A	C	3' - 0"	8' - 0"	0' - 1 3/4"		Wood		Alum		10/A-946	4/A-946		510	
S130C	OFFICE	A	C	3' - 0"	8' - 0"	0' - 1 3/4"		Wood		Alum		10/A-946	4/A-946		510	
S130D	OFFICE	A	C	3' - 0"	8' - 0"	0' - 1 3/4"		Wood		Alum		10/A-946	4/A-946		510	
S130E	OFFICE	A	C	3' - 0"	8' - 0"	0' - 1 3/4"		Wood		Alum		10/A-946	4/A-946		510	
S130F	OFFICE	A	C	3' - 0"	8' - 0"	0' - 1 3/4"		Wood		Alum		10/A-946	4/A-946		510	
S130G	OFFICE	A	C	3' - 0"	8' - 0"	0' - 1 3/4"		Wood		Alum		10/A-946	4/A-946		510	
S130H	CIRCULATION	E	E	2' - 11"	8' - 0"			Glass		Alum		10/A-946	4/A-946		411	
S140	STAIR 2	SF-1	SF-1	6' - 0"	9' - 1 1/2"			Glass	Match Curtain Wall	Alum	Match Curtain Wall				441	Card Reader
S140A	STAIR 2	A	A	3' - 6"	8' - 0"	0' - 1 3/4"	90 min	Wood		Metal		H-02	J-02		313	Card Reader, Fail Safe
S147	ELEC ROOM	A	A	3' - 0"	8' - 0"	0' - 1 3/4"		Wood		Metal		3/A-946	4/A-946		811	
S149I	OFFICE	I-A	I-A	3' - 0"	8' - 0"	0' - 1 3/4"		Wood		Alum			9/A-937		500	Provided by Demountable Vendor

GENERAL NOTES:

1. ALL DOORS IN AN STC RATED PARTITION SHALL HAVE A MINIMUM STC 45 RATING.

100% SUBMITTAL

AECOM

AECOM TECHNICAL SERVICES, INC.
3101 WILSON BOULEVARD
SUITE 900
ARLINGTON, VA 22201

T: 703-682-4900 F: 703.682.4901
www.aecom.com

SEAL AREA

BOARD OF ARCHITECTS 10984 EDWARD D. WEAVER STATE OF MARYLAND

KEY PLAN

REV	DATE	DESCRIPTION	S&R BR.	CUSTOMER	PM	SECT. HEAD
A	07/31/2012	Addendum No. 1				

	INITIALS	DATE
DRAWN BY	LA/NS	
CHECKED BY	BW/MW	
A-E MANAGER	EW	
ENVIRONMENTAL BRANCH	JH	
SAFETY BRANCH	CS	
CM	MMD	
PM	RWP	
CUSTOMER	JWB	
ENG. BRANCH	DGL	

ARCHITECTURE

DOOR SCHEDULE

A-811

FLIGHT PROJECTS BUILDING

NATIONAL AERONAUTICS AND SPACE ADMINISTRATION

GODDARD SPACE FLIGHT CENTER GREENBELT, MARYLAND
FACILITIES MANAGEMENT DIVISION

DATE ISSUED	CoF CODE OR WR#	AECOM PROJECT NO.	SCALE
10/12/2012	12GXAZ	60187636	

FILE DATE: 10/11/2012 6:48:53 PM

Door Schedule

Door No.	Room Name	Door Type	Frame Type	Opening Width	Opening Height	Thickness	Fire Rating	Door Mtrl	Door Finish	Frame Mtrl	Frame Finish	Head Detail	Jamb Detail	Sill Detail	Hardware Grp.	Comments
S151	OFFICE	I-A	I-A	3' - 0"	8' - 0"	0' - 1 3/4"		Wood		Alum			9/A-937		500	Provided by Demountable Vendor
S154I	OFFICE	I-A	I-A	3' - 0"	8' - 0"	0' - 1 3/4"		Wood		Alum			7/A-937		500	Provided by Demountable Vendor
S156I	OFFICE	I-A	I-A	3' - 0"	8' - 0"	0' - 1 3/4"		Wood		Alum			7/A-937		500	Provided by Demountable Vendor
S158A	STORAGE	A	A	3' - 0"	8' - 0"	0' - 1 3/4"		Wood		Alum		3/A-946	4/A-946		710	
S158I	OFFICE	I-A	I-A	3' - 0"	8' - 0"	0' - 1 3/4"		Wood		Alum			9/A-937		500	Provided by Demountable Vendor
S202I	OFFICE	I-A	I-A	3' - 0"	8' - 0"	0' - 1 3/4"		Wood		Alum			9/A-937		500	Provided by Demountable Vendor
S204I	OFFICE	I-A	I-A	3' - 0"	8' - 0"	0' - 1 3/4"		Wood		Alum			7/A-937		500	Provided by Demountable Vendor
S206I	OFFICE	I-A	I-A	3' - 0"	8' - 0"	0' - 1 3/4"		Wood		Alum			7/A-937		500	Provided by Demountable Vendor
S207	CONF ROOM	A	C	3' - 0"	8' - 0"	0' - 1 3/4"		Wood		Alum		10/A-946	4/A-946		114	
S207A	CONF ROOM	A	C	3' - 0"	8' - 0"	0' - 1 3/4"		Wood		Alum		10/A-946	4/A-946		114	
S209I	OFFICE	I-A	I-A	3' - 0"	8' - 0"	0' - 1 3/4"		Wood		Aum			7/A-937		500	Provided by Demountable Vendor
S211I	OFFICE	I-A	I-A	3' - 0"	8' - 0"	0' - 1 3/4"		Wood		Alum			7/A-937		500	Provided by Demountable Vendor
S213I	OFFICE	I-A	I-A	3' - 0"	8' - 0"	0' - 1 3/4"		Wood		Alum			9/A-937		500	Provided by Demountable Vendor
S215	STORAGE	A	C	3' - 0"	8' - 0"	0' - 1 3/4"		Wood		Alum		10/A-946	4/A-946		810	
S223I	SMALL CONF	I-A	I-A	3' - 0"	8' - 0"	0' - 1 3/4"		Wood		Alum			9/A-937		100	Provided by Demountable Vendor
S230	CIRCULATION	E	E	2' - 11"	8' - 0"			Glass		Alum		10/A-946	4/A-946		411	
S230B	OFFICE	A	C	3' - 0"	8' - 0"	0' - 1 3/4"		Wood		Alum		10/A-946	4/A-946		510	
S230C	OFFICE	A	C	3' - 0"	8' - 0"	0' - 1 3/4"		Wood		Alum		10/A-946	4/A-946		510	
S230D	OFFICE	A	C	3' - 0"	8' - 0"	0' - 1 3/4"		Wood		Alum		10/A-946	4/A-946		510	
S230E	OFFICE	A	C	3' - 0"	8' - 0"	0' - 1 3/4"		Wood		Alum		10/A-946	4/A-946		510	
S230F	OFFICE	A	C	3' - 0"	8' - 0"	0' - 1 3/4"		Wood		Alum		10/A-946	4/A-946		510	
S230G	CIRCULATION	E	E	2' - 11"	8' - 0"			Glass		Alum		10/A-946	4/A-946		411	
S240	STAIR 2	A	A	3' - 6"	8' - 0"	0' - 1 3/4"	90 min	Wood		Metal		H-02	J-02		310	
S241I	SMALL CONF	I-A	I-A	3' - 0"	8' - 0"	0' - 1 3/4"		Wood		Alum			9/A-937		100	Provided by Demountable Vendor
S247	ELEC ROOM	A	A	3' - 0"	8' - 0"	0' - 1 3/4"		Wood		Metal		3/A-946	4/A-946		811	
S249I	OFFICE	I-A	I-A	3' - 0"	8' - 0"	0' - 1 3/4"		Wood		Alum			9/A-937		500	Provided by Demountable Vendor
S251I	OFFICE	I-A	I-A	3' - 0"	8' - 0"	0' - 1 3/4"		Wood		Alum			9/A-937		500	Provided by Demountable Vendor
S254I	OFFICE	I-A	I-A	3' - 0"	8' - 0"	0' - 1 3/4"		Wood		Alum			7/A-937		500	Provided by Demountable Vendor
S256I	OFFICE	I-A	I-A	3' - 0"	8' - 0"	0' - 1 3/4"		Wood		Alum			7/A-937		500	Provided by Demountable Vendor
S258A	STORAGE	A	A	3' - 0"	8' - 0"	0' - 1 3/4"		Wood		Alum		3/A-946	4/A-946		710	
S258I	OFFICE	I-A	I-A	3' - 0"	8' - 0"	0' - 1 3/4"		Wood		Alum			9/A-937		500	Provided by Demountable Vendor
S302I	OFFICE	I-A	I-A	3' - 0"	8' - 0"	0' - 1 3/4"		Wood		Alum			9/A-937		500	Provided by Demountable Vendor
S304I	OFFICE	I-A	I-A	3' - 0"	8' - 0"	0' - 1 3/4"		Wood		Alum			7/A-937		500	Provided by Demountable Vendor
S306I	OFFICE	I-A	I-A	3' - 0"	8' - 0"	0' - 1 3/4"		Wood		Alum			7/A-937		500	Provided by Demountable Vendor
S307	CONF ROOM	A	C	3' - 0"	8' - 0"	0' - 1 3/4"		Wood		Alum		10/A-946	4/A-946		114	
S307A	CONF ROOM	A	C	3' - 0"	8' - 0"	0' - 1 3/4"		Wood		Alum		10/A-946	4/A-946		114	
S309I	OFFICE	I-A	I-A	3' - 0"	8' - 0"	0' - 1 3/4"		Wood		Alum			7/A-937		500	Provided by Demountable Vendor
S311I	OFFICE	I-A	I-A	3' - 0"	8' - 0"	0' - 1 3/4"		Wood		Alum			7/A-937		500	Provided by Demountable Vendor
S313I	OFFICE	I-A	I-A	3' - 0"	8' - 0"	0' - 1 3/4"		Wood		Alum			9/A-937		500	Provided by Demountable Vendor
S315	STORAGE	A	C	3' - 0"	8' - 0"	0' - 1 3/4"		Wood		Alum		10/A-946	4/A-946		810	
S323I	SMALL CONF	I-A	I-A	3' - 0"	8' - 0 1/2"	0' - 1 3/4"		Wood		Alum			9/A-937		100	Provided by Demountable Vendor
S330	CIRCULATION	E	E	2' - 11"	8' - 0"			Glass		Alum		10/A-946	4/A-946		411	
S330B	OFFICE	A	C	3' - 0"	8' - 0"	0' - 1 3/4"		Wood		Alum		10/A-946	4/A-946		510	
S330C	OFFICE	A	C	3' - 0"	8' - 0"	0' - 1 3/4"		Wood		Alum		10/A-946	4/A-946		510	
S330D	OFFICE	A	C	3' - 0"	8' - 0"	0' - 1 3/4"		Wood		Alum		10/A-946	4/A-946		510	
S330E	OFFICE	A	C	3' - 0"	8' - 0"	0' - 1 3/4"		Wood		Alum		10/A-946	4/A-946		510	
S330F	OFFICE	A	C	3' - 0"	8' - 0"	0' - 1 3/4"		Wood		Alum		10/A-946	4/A-946		510	
S330G	CIRCULATION	E	E	2' - 11"	8' - 0"			Glass		Alum		10/A-946	4/A-946		411	
S340	STAIR 2	A	A	3' - 6"	8' - 0"	0' - 1 3/4"	90 min	Wood		Metal		H-02	J-02		310	
S341I	SMALL CONF	I-A	I-A	3' - 0"	8' - 0 1/2"	0' - 1 3/4"		Wood		Alum			9/A-937		100	Provided by Demountable Vendor
S347	ELEC RM	A	A	3' - 0"	8' - 0"	0' - 1 3/4"		Wood		Metal		3/A-946	4/A-946		811	
S349I	OFFICE	I-A	I-A	3' - 0"	8' - 0"	0' - 1 3/4"		Wood		Alum			9/A-937		500	Provided by Demountable Vendor
S351I	OFFICE	I-A	I-A	3' - 0"	8' - 0"	0' - 1 3/4"		Wood		Alum			9/A-937		500	Provided by Demountable Vendor
S354I	OFFICE	I-A	I-A	3' - 0"	8' - 0"	0' - 1 3/4"		Wood		Alum			7/A-937		500	Provided by Demountable Vendor
S356I	OFFICE	I-A	I-A	3' - 0"	8' - 0"	0' - 1 3/4"		Wood		Alum			7/A-937		500	Provided by Demountable Vendor
S358A	STORAGE	A	A	3' - 0"	8' - 0"	0' - 1 3/4"		Wood		Alum		3/A-946	4/A-946		710	
S358I	OFFICE	I-A	I-A	3' - 0"	8' - 0"	0' - 1 3/4"		Wood		Alum			9/A-937		500	Provided by Demountable Vendor
S402I	OFFICE	I-A	I-A	3' - 0"	8' - 0"	0' - 1 3/4"		Wood		Alum			9/A-937		500	Provided by Demountable Vendor
S407	CONF ROOM	A	C	3' - 0"	8' - 0"	0' - 1 3/4"		Wood		Alum		10/A-946	4/A-946		114	
S407A	CONF ROOM	A	C	3' - 0"	8' - 0"	0' - 1 3/4"		Wood		Alum		10/A-946	4/A-946		114	
S409I	OFFICE	I-A	I-A	3' - 0"	8' - 0"	0' - 1 3/4"		Wood		Alum			7/A-937		500	Provided by Demountable Vendor
S411I	OFFICE	I-A	I-A	3' - 0"	8' - 0"	0' - 1 3/4"		Wood		Alum			7/A-937		500	Provided by Demountable Vendor
S413I	OFFICE	I-A	I-A	3' - 0"	8' - 0"	0' - 1 3/4"		Wood		Alum			9/A-937		500	Provided by Demountable Vendor
S415	STORAGE	A	C	2' - 8"	8' - 0"	0' - 1 3/4"		Wood		Alum		10/A-946	4/A-946		810	
S430	CIRCULATION	E	E	2' - 11"	8' - 0"			Glass		Alum		10/A-946	4/A-946		411	
S430B	OFFICE	A	C	3' - 0"	8' - 0"	0' - 1 3/4"		Wood		Alum		10/A-946	4/A-946		510	
S430C	OFFICE	A	C	3' - 0"	8' - 0"	0' - 1 3/4"		Wood		Alum		10/A-946	4/A-946		510	
S430D	OFFICE	A	C	3' - 0"	8' - 0"	0' - 1 3/4"		Wood		Alum		10/A-946	4/A-946		510	
S430E	OFFICE	A	C	3' - 0"	8' - 0"	0' - 1 3/4"		Wood		Alum		10/A-946	4/A-946		510	
S430F	OFFICE	A	C	3' - 0"	8' - 0"	0' - 1 3/4"		Wood		Alum		10/A-946	4/A-946		510	
S430G	CIRCULATION	E	E	2' - 11"	8' - 0"			Glass		Alum		10/A-946	4/A-946		411	
S430I	LIBRARY	A	A	3' - 0"	8' - 0"	0' - 1 3/4"		Wood		Alum		3/A-946	4/A-946		711	
S440	STAIR 2	A	A	3' - 6"	8' - 0"	0' - 1 3/4"	90 min	Wood		Alum		H-02	J-02		310	
S447	ELEC ROOM	A	A	3' - 0"	8' - 0"	0' - 1 3/4"		Wood		Alum		3/A-946	4/A-946		811	
S449I	OFFICE	I-A	I-A	3' - 0"	8' - 0"	0' - 1 3/4"		Wood		Alum			9/A-937		500	Provided by Demountable Vendor
S451I	CIRCULATION	I-A	I-A	3' - 0"	8' - 0"	0' - 1 3/4"		Wood		Alum			9/A-937		500	Provided by Demountable Vendor
S458A	STORAGE	A	A	3' - 0"	8' - 0"	0' - 1 3/4"		Wood		Alum		3/A-946	4/A-946		710	
S458I	OFFICE	I-A	I-A	3' - 0"	8' - 0"	0' - 1 3/4"		Wood		Alum			9/A-937		500	Provided by Demountable Vendor
S540	STAIR 2	A	A	3' - 0"	7' - 0"	0' - 1 3/4"	90 min	Metal		Metal					818	Fail Safe, Door Control Alarm

Door Schedule

Door No.	Room Name	Door Type	Frame Type	Opening Width	Opening Height	Thickness	Fire Rating	Door Mtrl	Door Finish	Frame Mtrl	Frame Finish	Head Detail	Jamb Detail	Sill Detail	Hardware Grp.	Comments

GENERAL NOTES:

1. ALL DOORS IN AN STC RATED PARTITION SHALL HAVE A MINIMUM STC 45 RATING.

100% SUBMITTAL

AECOM

AECOM TECHNICAL SERVICES, INC.
3101 WILSON BOULEVARD
SUITE 900
ARLINGTON, VA 22201

T: 703-682-4900 F: 703.682.4901
www.aecom.com

SEAL AREA

KEY PLAN

REV	DATE	DESCRIPTION	S&R BR.	CUSTOMER	PM	SECT. HEAD
A	07/31/2012	Addendum No. 1				

	INITIALS	DATE
DRAWN BY	LA/NS	
CHECKED BY	BW/MW	
A-E MANAGER	EW	
ENVIRONMENTAL BRANCH	JH	
SAFETY BRANCH	CS	
CM	MMD	
PM	RWP	
CUSTOMER	JWB	
ENG. BRANCH	DGL	

ARCHITECTURE

DOOR SCHEDULE

A-812

FLIGHT PROJECTS BUILDING

NATIONAL AERONAUTICS AND SPACE ADMINISTRATION

GODDARD SPACE FLIGHT CENTER GREENBELT, MARYLAND
FACILITIES MANAGEMENT DIVISION

DATE ISSUED	CoF CODE OR WR#	AECOM PROJECT NO.	SCALE
10/12/2012	12GXAZ	60187636	

FILE DATE: 10/11/2012 5:46:15 PM

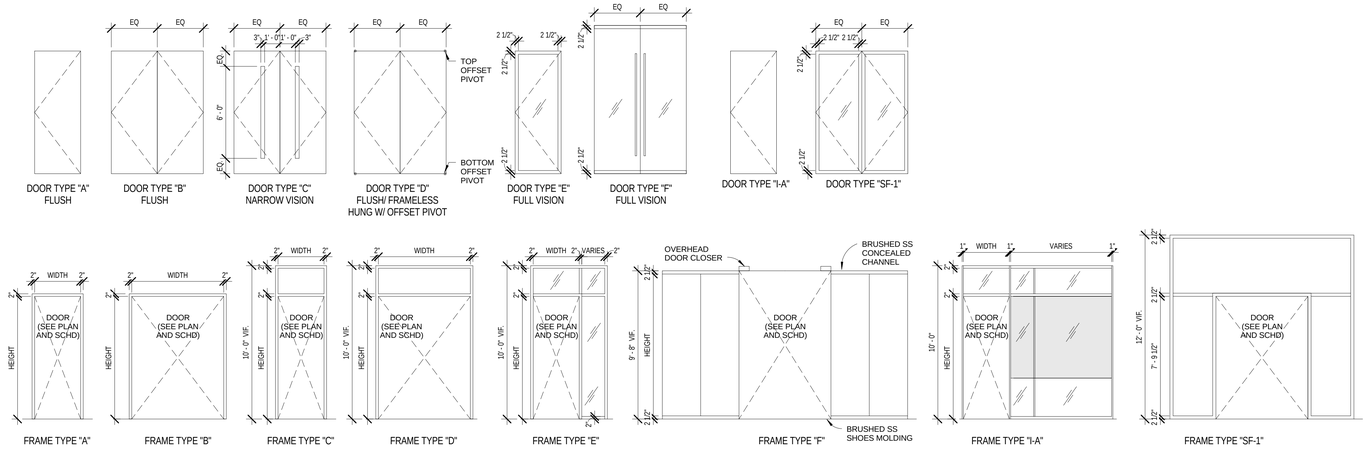

1 DOOR AND FRAME TYPE

A-813 REF. SCALE: 1/4" = 1'-0"

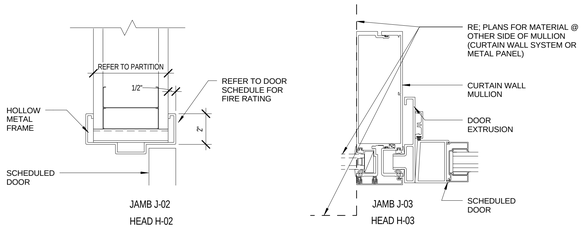

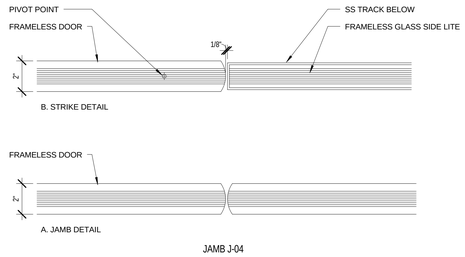

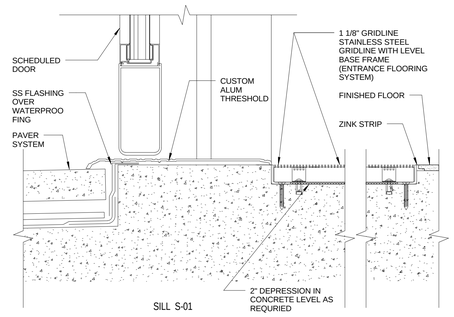

2 DOOR JAMB & HEAD

A-813 REF. SCALE: 3" = 1'-0"

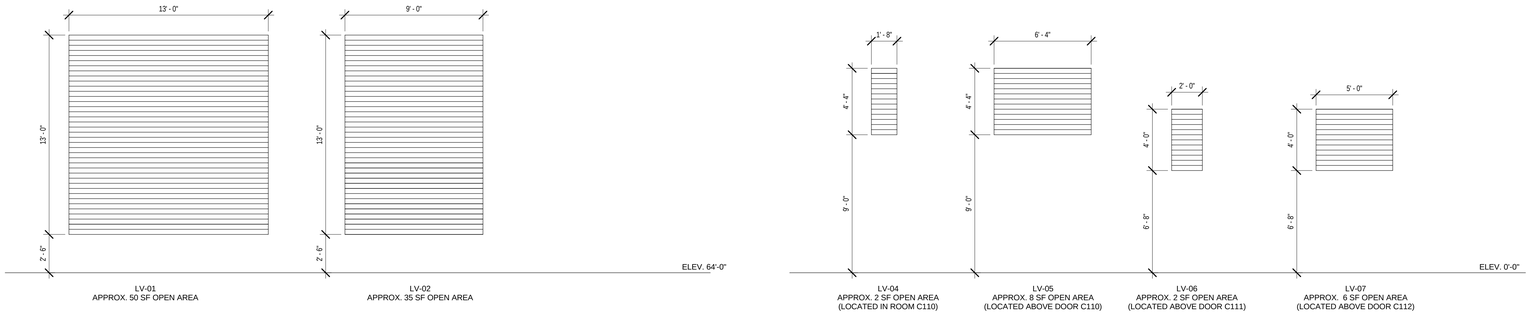

3 LOUVERS

A-813 REF. SCALE: 1/4" = 1'-0"

100% SUBMITTAL

AECOM

AECOM TECHNICAL SERVICES, INC.
3101 WILSON BOULEVARD
SUITE 900
ARLINGTON, VA 22201

T: 703-682-4900 F: 703.682.4901
www.aecom.com

SEAL AREA

BOARD OF ARCHITECTS 10004 REGISTERED ARCHITECT STATE OF MARYLAND

KEY PLAN

REV	DATE	DESCRIPTION	S&R BR.	CUSTOMER	PM	SECT. HEAD

	INITIALS	DATE
DRAWN BY	LA/NS	
CHECKED BY	BW/MW	
A-E MANAGER	EW	
ENVIRONMENTAL BRANCH	JH	
SAFETY BRANCH	CS	
CM	MMD	
PM	RWP	
CUSTOMER	JWB	
ENG. BRANCH	DGL	

DOOR & LOUVER DETAILS

A-813

FLIGHT PROJECTS BUILDING

NATIONAL AERONAUTICS AND SPACE ADMINISTRATION

GODDARD SPACE FLIGHT CENTER GREENBELT, MARYLAND
FACILITIES MANAGEMENT DIVISION

ARCHITECTURE	DATE ISSUED	CoF CODE OR WR#	AECOM PROJECT NO.	SCALE
	10/12/2012	12GXAZ	60187636	As indicated

FILE DATE: 10/11/2012 4:16:54 PM

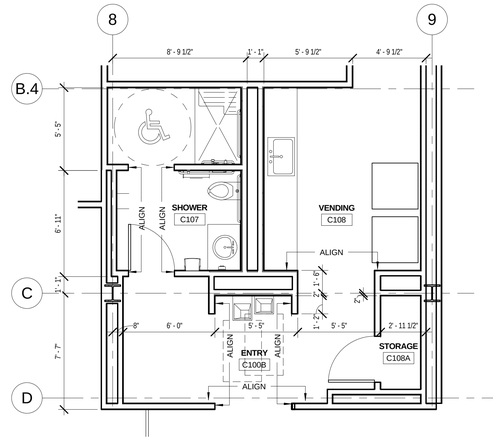

1 TYPICAL SHOWERS - LEVEL 1 & 2

A-821 REF. A-101b SCALE: 1/4" = 1'-0"

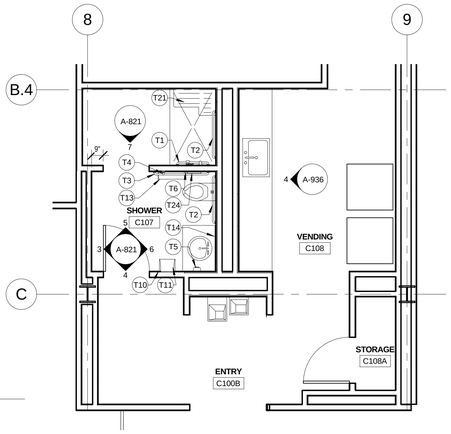

2 TYPICAL SHOWERS ACCESSORIES - LEVEL 1 & 2

A-821 REF. SCALE: 1/4" = 1'-0"

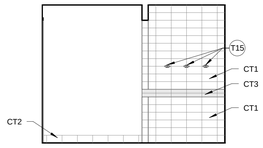

3 SHOWER - NORTH ELEVATION

A-821 REF. A-821 SCALE: 1/4" = 1'-0"

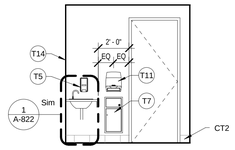

4 SHOWER - WEST ELEVATION

A-821 REF. A-821 SCALE: 1/4" = 1'-0"

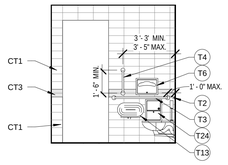

5 SHOWER - EAST ELEVATION

A-821 REF. A-821 SCALE: 1/4" = 1'-0"

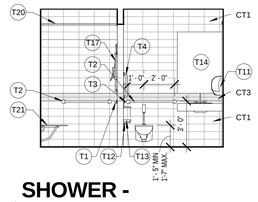

6 SHOWER - SOUTH ELEVATION

A-821 REF. A-821 SCALE: 1/4" = 1'-0"

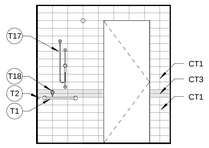

7 SHOWER - WEST ELEVATION

A-821 REF. A-821 SCALE: 1/4" = 1'-0"

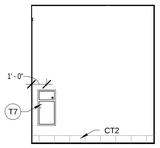

8 WOMEN'S RESTROOM - SOUTH ELEVATION

A-821 REF. A-821 SCALE: 1/4" = 1'-0"

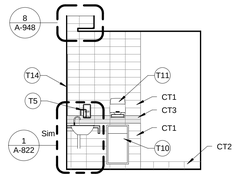

9 WOMEN'S RESTROOM- SOUTH ELEVATION TYP.

A-821 REF. A-821 SCALE: 1/4" = 1'-0"

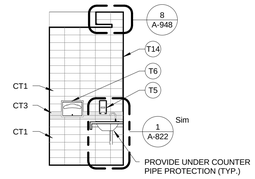

10 WOMEN'S RESTROOM- EAST ELEVATION TYP.

A-821 REF. A-821 SCALE: 1/4" = 1'-0"

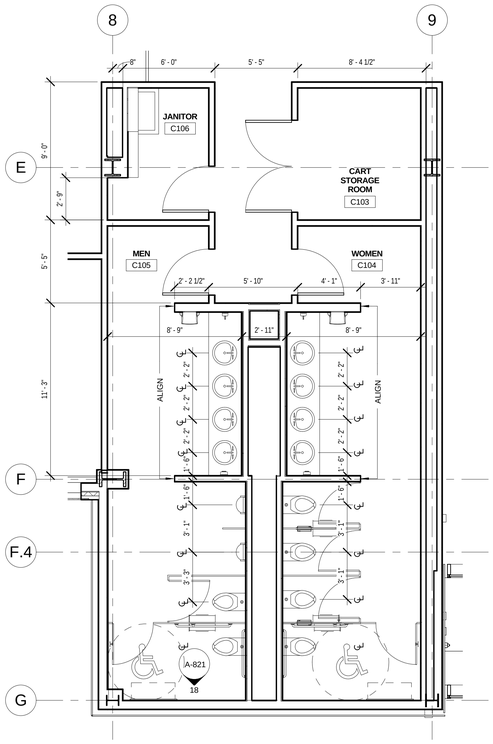

14 TYP. RESTROOM-LEVEL 1,2,3&4

A-821 REF. A-101b SCALE: 1/4" = 1'-0"

NOTE: DIMENSIONS TYPICAL BOTH ROOM (U.N.O.)

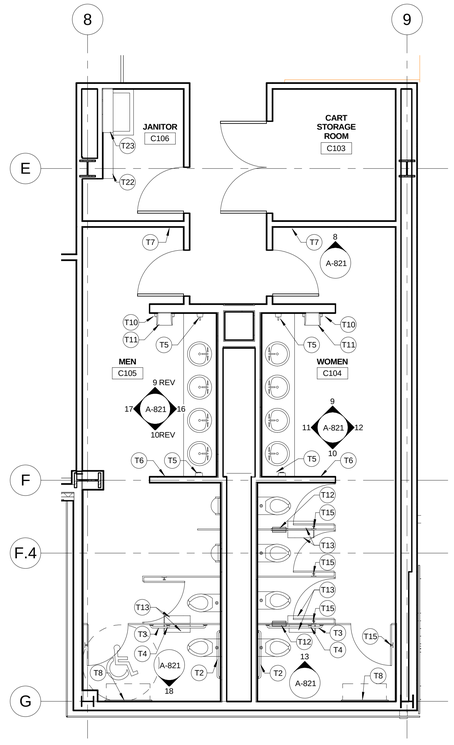

15 TYP. RESTROOM ACCESSORIES-LEVEL 1,2,3&4

A-821 REF. SCALE: 1/4" = 1'-0"

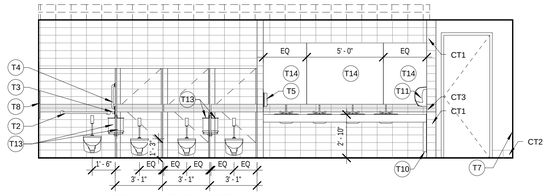

11 WOMEN'S RESTROOM- NORTH ELEVATION TYP.

A-821 REF. A-821 SCALE: 1/4" = 1'-0"

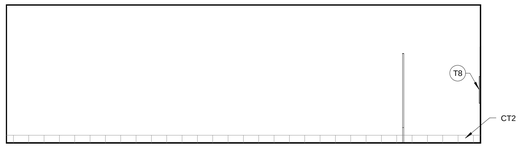

12 WOMEN'S RESTROOM - SOUTH ELEVATION TYP.

A-821 REF. A-821 SCALE: 1/4" = 1'-0"

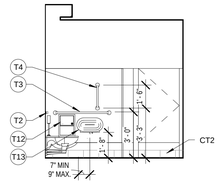

13 WOMEN'S ROOM - WEST ELEVATION TYP.

A-821 REF. A-821 SCALE: 1/4" = 1'-0"

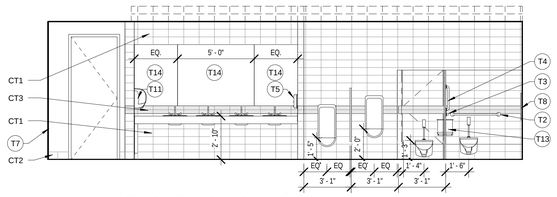

16 MEN'S RESTROOM- SOUTH ELEVATION TYP.

A-821 REF. A-821 SCALE: 1/4" = 1'-0"

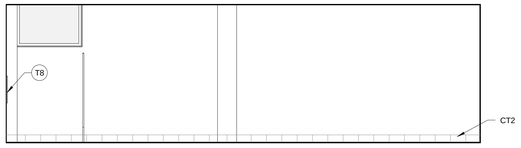

17 MEN'S RESTROOM - NORTH ELEVATION

A-821 REF. A-821 SCALE: 1/4" = 1'-0"

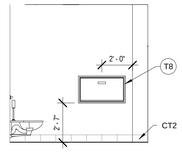

18 MEN'S RESTROOM- WEST ELEVATION TYP.

A-821 REF. A-821 SCALE: 1/4" = 1'-0"

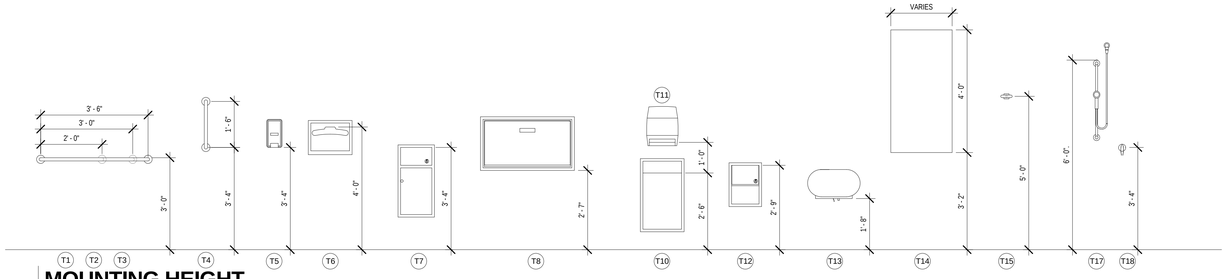

MOUNTING HEIGHT

REF. SCALE: 1/2" = 1'-0"

100% SUBMITTAL

TOILET ROOM GENERAL NOTES:

1. PROVIDE A CLEAR FLOOR SPACE OF 30"X48" IN FRONT OF LAVATORY TO PERMITE A FORWARD APPROACH.
2. MOUNT LAVATORIES WITH A MINIMUM CLEARANCE OF 29" FROM THE FLOOR TO THE BOTTOM OF THE APRON. PROVIDE KNEE CLEARANCE UNDER THE FRONT LIP EXTENDING A MINMUM OF 30" IN WIDTH WITH 8" MINIMUM WIDTH, AND SHALL BE MINIMUM OF 9" HIGH FROM THE FLOOR A MINIMUM OF 17" DEEP FROM THE FRONT OF THE LAVATORY.
3. FAUCET CONTROLS AND OPERATNG MECHANISMS SHALL BE OPERABLE WITH ONE HAND AND SHALL NOT REQUIRE TIGHT GRASPING, PINCHING OR TWISTING OF THE WRIST. THE FORCE REQUIRED TO ACTIVATE CONTROLS SHALL BE NO GREATER THAN 5 POUNDS, LEVER OPERATED, PUSH TYPE AND ELECTRONICALLY CONTROLLED MECHANISM ARE EXAMPLES OF ACCEPABLE DESIGNS. SELF CLOSING ARE ALLOWED IF THE FACET REMAINS OPEN FOR AT LEAST 10 SECOND
4. INSULATE OR OTHERWISE COVER HOT WATER AND DRAIN PIPES UNDER LAVATORIES.
5. THERE SHALL BE NO SHAR OR ABRASIVE SURFACE UNDER LAVATORIES.
6. MOUNT FLUSH VALVE CONTROL NO MORE THAN 44" ABOVE THE FLOOR, ON THE SIDE OF THE TOILET WITH THE GREATEST SEPARATION FROM THE ADACENT WALL OR THE SURFACE.

ENTRY TO SANITARY FACILITIES:

7. 44" CLEAR ASILES OR CORRIDORS WHERE OCCUPANT LOAD IS 10 OR MORE.
8. DOORWAYS TO HAVE A 32: CLEAR OPENING.
9. ON APPROCACH SIDE, PROVIDE A 60: CLEAR LEVEL WHEN DOOR SWINGS TOWARD APPROACH AND 44" SPACE WHEN DOOR SWINGS AWAY FROM APPROACH.

TOILET ROOM ACCESSORIES:

10. MOUNT BOTTOM EDGE OF MIRRORS NO HIGHER THAN 40" FROM THE FLOOR.
11. MOUNT TOILET TISSUE DISPENSERS WITHIN 12" FROM THE FRONT EDGE OF THE TOILET SEAT.
12. MOUNT DISPENSING AND DISPOSAL FIXTURES (TOWEL, WASTE, ETC) WITH OPERATING PARTS NO HIGHER THAN 40" FROM THE FLOOR.

SINGLE ACCOMMODATION TOILET FACILITY

13. WATER CLOSET TO HAVE A 28" CLEARANCE FROMA FIXTURE AND 32" FROM THE WALL.
14. MINIMUM CLEAR SPACE IN FRONT OF WATER CLOSET TO BE 48".
15. A SPACE 36"X48" IS PERMITTED IN FRONT OF EXISTING WATER CLOSET ACCESSIBLE TO THE HANDICAPPED 20". THE HEIGHT OF THE WATER CLOSET (TOP OF THE SEAT) SHALL BE BETWEEN 17" AND 19"

TOILET ACCESSORIES LEGEND:

- T1 1 1/4" DIA X 24" GRAB BAR - BRADLEY 832 001-24
- T2 1-1/4" DIA X 36" GRAB BAR - BRADLEY 832 001-36
- T3 1-1/4" DIA X 42" GRAB BAR - BRADLEY 832 001-42
- T4 1-1/4" DIA X 18" GRAB BAR - BRADLEY 832 001-18
- T5 SURFACE MOUNTED SOAP DISPENSER - GOJO 9034-12
- T6 RECESSED SEAT COVER DISPENSER - BRADLEY 584
- T7 RECESSED WASTE RECEPTACLE - BRADLEY 3251
- T8 HORIZONTAL RECESSED-MOUNTED BABY CHANGING STATION - BRADLEY 962 (ONLY ON 1ST AND 2ND FLOOR)
- T9 NOT USED
- T10 RECESSED WASTE RECEPTACLE - BRADLEY 346
- T11 SURFACE MOUNTED TOWEL DISPENSER - SILHOUETTE GRIZZLY PULL & TEAR DISPENSER
- T12 PARTITION MOUNTED NAPKIN DISPOSAL - BRADLEY 4721-15
- T13 SURFACE MOUNTED TOILET TISSUE DISPENSER - TORK 247550
- T14 FRAMELESS MIRROR WITH CLIP FASTENERS - BRADLEY 747
- T15 SURFACE MOUNTED DOUBLE COAT HOOK - BRADLEY 9124
- T16 NOT USED
- T17 ADA HAND SHOWER - BRADLEY 5520 A36
- T18 SHOWER VALVE - BRADLEY Equa-Flo C5
- T19 TOWEL HOOK - BRADLEY 9314
- T20 SHOWER CURTAIN ROD
- T21 SHOWER SEAT
- T22 UTILITY SHELF - BRADLEY 9933
- T23 SHELF - BRADLEY 758-54
- T24 SEMI-RECESSED NAPKIN DISPOSAL -BRADLEY 4722-1015

AECOM
AECOM TECHNICAL SERVICES, INC.
3101 WILSON BOULEVARD
SUITE 900
ARLINGTON, VA 22201
T: 703-682-4900 F: 703.682.4901
www.aecom.com

SEAL AREA

BOARD OF ARCHITECTS
ROBERT E. WARREN
No. 10094
REGISTERED ARCHITECT
STATE OF MARYLAND

KEY PLAN

REV	DATE	DESCRIPTION	S&R BR.	CUSTOMER	PM	SECT. HEAD

	INITIALS	DATE
DRAWN BY	LA/NS	
CHECKED BY	BW/MW	
A-E MANAGER	EW	
ENVIRONMENTAL BRANCH	JH	
SAFETY BRANCH	CS	
CM	MMD	
PM	RWP	
CUSTOMER	JWB	
ENG. BRANCH	DGL	
ARCHITECTURE		

ENLARGED - RESTROOM/SHOWER PLANS & ELEVATIONS

A-821

FLIGHT PROJECTS BUILDING

NATIONAL AERONAUTICS AND SPACE ADMINISTRATION
GODDARD SPACE FLIGHT CENTER GREENBELT, MARYLAND
FACILITIES MANAGEMENT DIVISION

DATE ISSUED	CoF CODE OR WR#	AECOM PROJECT NO.	SCALE
10/12/2012	12GXAZ	60187636	As indicated

FILE DATE: 10/11/2012 5:47:07 PM

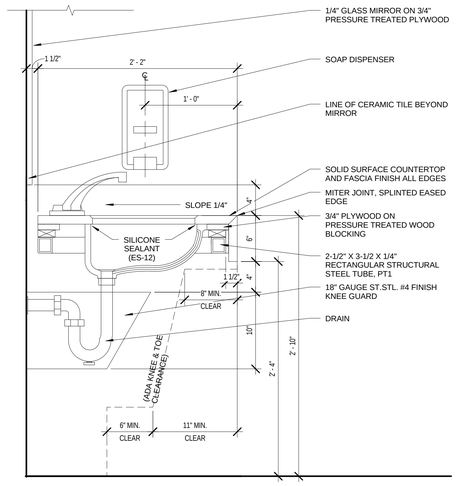

1 VANITY - SECTION

A-822 REF. A-821 SCALE: 1 1/2" = 1'-0"

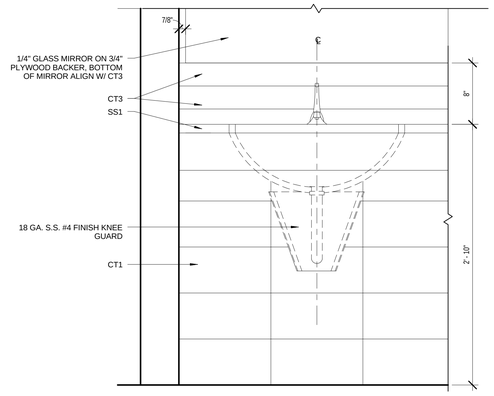

2 VANITY - PARTIAL ELEVATION

A-822 REF. SCALE: 1 1/2" = 1'-0"

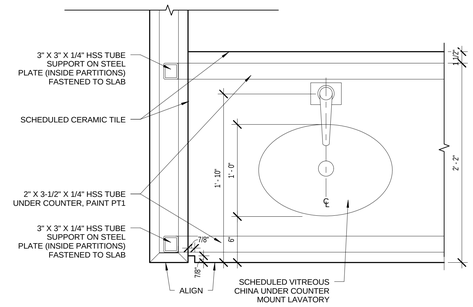

3 VANITY - PLAN

A-822 REF. SCALE: 1 1/2" = 1'-0"

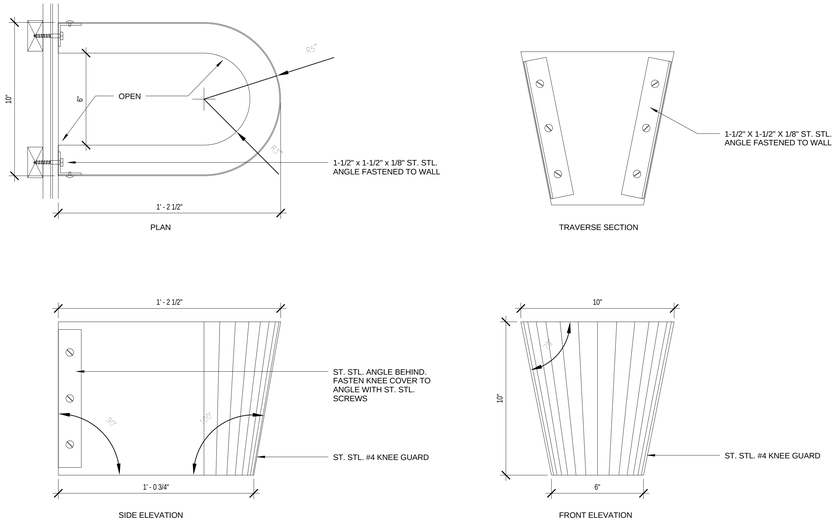

4 DETAIL - SECTION

A-822 REF. SCALE: 3" = 1'-0"

100% SUBMITTAL

AECOM
AECOM TECHNICAL SERVICES, INC.
3101 WILSON BOULEVARD
SUITE 900
ARLINGTON, VA 22201

T: 703-682-4900 F: 703.682.4901
www.aecom.com

SEAL AREA

BOARD OF ARCHITECTS 10004 ELIZABETH WILSON STATE OF MARYLAND

KEY PLAN

REV	DATE	DESCRIPTION	S&B BR.	CUSTOMER	PM	SECT. HEAD

	INITIALS	DATE
DRAWN BY	LA/NS	
CHECKED BY	BW/MW	
A-E MANAGER	EW	
ENVIRONMENTAL BRANCH	JH	
SAFETY BRANCH	CS	
CM	MMD	
PM	RWP	
CUSTOMER	JWB	
ENG. BRANCH	DGL	
ARCHITECTURE		

LAVATORY DETAILS

A-822

FLIGHT PROJECTS BUILDING

NATIONAL AERONAUTICS AND SPACE ADMINISTRATION

GODDARD SPACE FLIGHT CENTER GREENBELT, MARYLAND
FACILITIES MANAGEMENT DIVISION

DATE ISSUED	CoF CODE OR WR#	AECOM PROJECT NO.	SCALE
10/12/2012	12GXAZ	60187636	As indicated

FILE DATE: 10/11/2012 4:17:04 PM

CARPET

CODE: CPT1
DESCRIPTION: CARPET TILE
MANUFACTURER: BENTLEY PRINCE STREET
COLLECTION NAME: FUNCTIONAL EXPRESSION LOOP
STYLE NAME: HISTORICAL REVIVAL LOOP
STYLE NUMBER: 8LH240630R
COLOR: BUILDING PLAN 880230
BACKING: NEXSTEP CUSHION TILE BACKING,
HEALTHBOND 2300 TILE ADHESIVE (RELEASABLE)
CONSTRUCTION: TUFTED TEXTURED LOOP
DYE TYPE: SOLUTION DYED NYLON
SIZE: 24" x 24"
TILE DIRECTION: MONOLITHIC

CEILING SYSTEMS

CODE: ACP1
DESCRIPTION: ACOUSTICAL CEILING TILE AND GRID
MANUFACTURER: ARMSTRONG
STYLE NAME: OPTIMA, OPEN PLAN TEGULAR FINE TECTURE
STYLE NUMBER: 3251
SIZE: 2' x 2' x 1"
COLOR: WHITE
GRID: ARMSTRONG SILHOUETTE XL 1/4" REVEAL, 9/16" BOLT-SLOT SYSTEM, ANGLE MOLDING

ACCESSORIES PER DETAILS:
MANUFACTURER: ARMSTRONG
- 2" TRANSITION TRIM
- AXIOM KNIFE EDGE PROFILE

CODE: CLG1
DESCRIPTION: GYPSUM WALL BOARD CEILING
COLOR: PT4 WHITE

CODE: XCLG1
DESCRIPTION: EXTERIOR SOFFIT STUCCO
COLOR: TO MATCH METAL PANEL

CERAMIC TILE

CODE: CT1
DESCRIPTION: PORCELAIN TILE
MANUFACTURER: CROSSVILLE TILE
NAME: RETRO ACTIVE
COLOR: PURE WHITE
FINISH: UNPOLISHED
SIZE: 6" X 12"
GROUT: MATCH TILE
LOCATION: WALLS

CODE: CT2
DESCRIPTION: PORCELAIN TILE
MANUFACTURER: CROSSVILLE TILE
NAME: RETRO ACTIVE
COLOR: PURE WHITE
FINISH: UNPOLISHED
SIZE: 6" X 12" SINGLE BULLNOSE BASE
GROUT: MATCH TILE
LOCATION: WALL BASE

CODE: CT3
DESCRIPTION: PORCELAIN TILE
MANUFACTURER: CROSSVILLE TILE
NAME: RETRO ACTIVE
COLOR: PURE WHITE
FINISH: UNPOLISHED
SIZE: 3" X 12"
GROUT: MATCH TILE
LOCATION: WALLS (ACCENT TILE)

GLAZING

CODE: GL1
TYPE: LOW IRON BACK PAINTED GLASS, TEMPERED
MANUFACTURER: BENDHEIM
NUMBER: CNRS-104326
THICKNESS: 1/4"
LOCATION: CHAIR RAIL
NOTE: FINISHED EDGE AT BUTT JOINT.

CODE: GL2
TYPE: CLEAR GLASS, TEMPERED
LOCATION: CLEARSTORY
NOTES: REFER TO DEMOUNTABLE PARTITION SPECIFICATIONS
FOR GLASS ON DEMOUNTABLE PARTITIONS.

CODE: GL3
TYPE: LOW IRON STARPHIRE, TEMPERED
LOCATION: DISPLAY CASE

CODE: GL4
TYPE: LOW IRON SATINTECH ETCHED GLASS, TEMPERED
MANUFACTURER: BENDHEIM
NUMBER: CNRS-105237
THICKNESS: 1/2"
LOCATION: SUITE ENTRIES

CODE: AWF1
TYPE: ARCH. WINDOW FILM
MANUFACTURER: 3M ARCHITECTURAL MARKETS
STYLE: MILANO / MILKY WHITE
NUMBER: 70-0709-0297-1
NOTES: FILM ON GLASS, REFER TO SPECIFICATIONS FOR GLASS.

GYPSUM WALL BOARD

CODE: GWB1
FINISH: REFER TO PAINT FINISH KEY

INTERIOR ARCHITECTURAL MILLWORK

CODE: WD1
DESCRIPTION: WOOD VENEER
SPECIES: PLAIN SLICED CHERRY
COLOR: MATCH ARCHITECT'S SAMPLE
MATCHING: BOOKMATCH

CODE: WB1
DESCRIPTION: FLUSH PAINTED WOOD BASE
COLOR: PT1

CODE: PL1
DESCRIPTION: PLASTIC LAMINATE
MANUFACTURER: FORMICA, COLORCORE 2
NUMBER: 7223C-90
COLOR: NEW WHITE
FINISH: GLOSS FINISH
LOCATION:

CODE: PL2
DESCRIPTION: PLASTIC LAMINATE
MANUFACTURER: ABET LAMINATI
NAME: 406 MAGNETICO
NUMBER: 406MAG
COLOR: WHITE
FINISH: DRY ERASE & MAGNETIC FINISH
LOCATION: 1ST FLOOR MAIL ROOM

CODE: PL3
DESCRIPTION: PLASTIC LAMINATE
MANUFACTURER: FORMICA, COLORCORE 2
NUMBER: 923C-FV
COLOR: SURF
FINISH: VELOUR FINISH
LOCATION: PANTRY & COPY AREAS

METAL FABRICATION

CODE: MTL1
MATERIAL: STAINLESS STEEL
FINISH: #4 BRUSHED
LOCATION: REFER TO DETAILS AND ELEVATIONS

PAINT

CODE: PT1
DESCRIPTION: PAINT
MANUFACTURER: SHERWIN WILLIAMS
NUMBER: SW7014
COLOR: EIDER WHITE
NOTES: EGGSHELL
LOCATION: GENERAL

CODE: PT2
DESCRIPTION: PAINT
MANUFACTURER: SHERWIN WILLIAMS
NUMBER: SW7007
COLOR: CEILING BRIGHT WHITE
NOTES: FLAT
LOCATION: CEILING

CODE: PT3
DESCRIPTION: SPECIALTY PAINT
MANUFACTURER: SCUFFMASTER "SCRUB TOUGH PAINT"
NUMBER: MATCH PT1
COLOR: WHITE
NOTES: WALLS
LOCATION: C110, C111, C112, C500, C501, C502

CODE: PT4
DESCRIPTION: EPOXY PAINT
MA NUFACTURER: SHERWIN WILLIAMS - ARMORSEAL
NUMBER: 1000 HS EPOXY FLOOR COATING
COLOR: HAZE GREY
NOTES: FLOOR
LOCATION: C110, C111, C112, C500, C501, C502

PAINT FINISH KEY

KEY: A
SHEEN: FLAT
GEO./DEGREE: 85
GLOSS RANGE: BELOW 15
LOCATIONS: PAINT GYPSUM BOARD CEILINGS

KEY: B
SHEEN: EGGSHELL
GEO./DEGREE: 60
GLOSS RANGE: 5 TO 25
LOCATIONS: PAINTED GYPSUM BOARD

KEY: C
SHEEN: SEMI-GLOSS
GEO./DEGREE: 60
GLOSS RANGE: 30 TO 65
LOCATIONS: MILLWORK WHERE NOTED, WOOD AND METAL DOORS AND FRAMES

KEY: D
SHEEN: GLOSS
GEO./DEGREE: 60
GLOSS RANGE: OVER 65
LOCATIONS: MILLWORK WHERE NOTED

QUARTZ

CODE: SS1
DESCRIPTION: QUARTZ SURFACES
MANUFACTURER: DUPONT, ZODIAQ
COLOR: CLOUD WHITE

RESILIENT FLOORING

CODE: RF1
DESCRIPTION: RESILIENT FLOORING
MANUFACTURER: OZOLOC
STYLE NAME: ETCHINGS
COLOR NUMBER: TM 62654
SIZE: 4" X 36" PLANKS
DIRECTION: ASHLAR, CENTER OF PLANK
LOCATION: PANTRY & COPY AREAS

CODE: RF2
DESCRIPTION: RESILIENT FLOORING
MANUFACTURER: ARMSTRONG
STYLE NAME: MIGRATIONS BBT WITH BIOSTRIDE
COLOR: T3501 PLATINUM GRAY
SIZE: 12" X 12"
LOCATION: ELECTRICAL, STORAGE & PRODUCTION ROOMS

RESILIENT WALL BASE:

CODE: RB1
DESCRIPTION: RUBBER WALL BASE
MANUFACTURER: JOHNSONITE
NUMBER: DC-029 TP
COLOR: MOONROCK
HEIGHT: 2.5"
THICK: 1/8"
NOTES: STRAIGHT FOR CARPET, COVE FOR RESILIENT FLOORING

SPECIAL WALL FINISHES

CODE: TP1
DESCRIPTION: TACKABLE STRETCHED WALL PANELS
FABRIC MAN.: MAHARAM
PATTERN: GLINT 901380
COLOR: 002 OYSTER
WIDTH: 54"
CLASS: A
NOTES: LARGE CONFERENCE ROOMS

CODE: TP2
DESCRIPTION: TACKABLE STRETCHED WALL PANELS
FABRIC MAN.: MAHARAM
PATTERN: TEK-WALL 1001 397670
COLOR: 195 LINEN MIST
WIDTH: 54"
CLASS: A
NOTES: SMALL CONFERENCE ROOMS

CODE: TP3
DESCRIPTION: TACKABLE STRETCHED WALL PANELS
FABRIC MAN.: MAHARAM
PATTERN: SHARKSKIN 2 901650
COLOR: 039 LYRIC
WIDTH: 54"
CLASS: A
LOCATION: SYMPOSIUM

CODE: WC1
DESCRIPTION: WALLCOVERING
FABRIC MAN.: MAHARAM
PATTERN: INOX BASIC 398940
COLOR: 001 PRISTINE
WIDTH: 54"
CLASS: A
LOCATION: DISPLAY CASE

STAINED CONCRETE

CODE: SC1
DESCRIPTION: SEALED CONCRETE
MANUFACTURER: SHERWIN WILLIAMS
PRODUCT NAME: H&C LOW VOC CONCRETE SEALER CLEAR GLOSS SOLVENT BASED
COLOR: CLEAR
LOCATION: JANITORS CLOSETS. TELECOM & SERVER ROOMS
NOTES: AT WET AREAS ADD SLIP RESISTANT ADDITIVE

TERRAZZO

CODE: TZ1
DESCRIPTION: TERRAZZO
MANUFACTURER: BASIS OF DESIGN: TERRAZZO & MARBLE SUPPLY COMPANIES,
TERROXY RESIN SYSTEM
NUMBER: TM#11-1964
BASE HEIGHT: 2.5" PRECAST TERRAZZO STRAIGHT BASE
THICKNESS: 3/8" THICK
NOTES: REFER TO DETAIL 2/A-921

UPHOLSTERY

CODE: UP1
DESCRIPTION: UPHOLSTERY
MANUFACTURER: LUNA TEXTILES
NUMBER: WSH-5101
NAME: WISH
COLOR: SWEETWATER
WIDTH: 54"
CLASS: A, ASTM E 84, NFPA 260, CALIFORNIA TECHNICAL BULLETIN 117E
LOCATION: SUITE BENCHES

CODE: UP2
DESCRIPTION: UPHOLSTERY
MANUFACTURER: LUNA TEXTILES
NUMBER: WSH-5103
NAME: WISH
COLOR: CARGO
WIDTH: 54"
CLASS: A, ASTM E 84, NFPA 260, CALIFORNIA TECHNICAL BULLETIN 117E
LOCATION: PANTRY BENCHES

WINDOW SHADES

CODE: WT1
DESCRIPTION: EXTERIOR WINDOW ROLLER SHADE FABRIC
MANUFACTURER: MECHO SHADE SYSTEMS
STYLE: THERMO VEIL DENSE BASKET WEAVE, 1500 SERIES (3% OPEN)
COLOR: 1513 GREY

CODE: WT2
DESCRIPTION: EXTERIOR WINDOW ROLLER SHADE FABRIC
MANUFACTURER: MECHO SHADE SYSTEMS
STYLE: MIDNITE BLACKOUT 0200 SERIES
COLOR: SLATE 0211
NOTES: PROVIDE WT1 AND WT2 AT SYMPOSIUM C211

DEMOUNTABLE PARTITIONS

SOLID WALL FACE PANELS
WALL FINISH: PAINT PT1
FRAME FINISH: ANNODIZED ALUMINUM
DOORS: WD1
GLASS: GL2, CLEAR GLASS
WINDOW FILM WHERE NOTED: AWF1
NOTES: REFER TO A-937 FOR DETAILS

100% SUBMITTAL

AECOM
AECOM TECHNICAL SERVICES, INC.
3101 WILSON BOULEVARD
SUITE 900
ARLINGTON, VA 22201

T: 703-682-4900 F: 703.682.4901
www.aecom.com

SEAL AREA

KEY PLAN

REV	DATE	DESCRIPTION	S&R BR.	CUSTOMER	PM	SECT. HEAD

	INITIALS	DATE
DRAWN BY	LA/NS	
CHECKED BY	BW/MW	
A-E MANAGER	EW	
ENVIRONMENTAL BRANCH	JH	
SAFETY BRANCH	CS	
CM	MMD	
PM	RWP	
CUSTOMER	JWB	
ENG. BRANCH	DGL	

ARCHITECTURE

FINISH MATERIALS LEGEND

A-901

FLIGHT PROJECTS BUILDING

NATIONAL AERONAUTICS AND SPACE ADMINISTRATION
GODDARD SPACE FLIGHT CENTER GREENBELT, MARYLAND
FACILITIES MANAGEMENT DIVISION

DATE ISSUED	CoF CODE OR WR#	AECOM PROJECT NO.	SCALE
10/12/2012	12GXAZ	60187636	

FILE DATE: 10/11/2012 4:17:12 PM

Signage Type Schedule		
Mark	Room Name	Signage Type
C100A	ENTRY	D
C100B	ENTRY	D
C103	CART STORAGE ROOM	D
C104	WOMEN	B
C105	MEN	C
C106	JANITOR	D
C107	SHOWER	A
C108	VENDING	D
C108A	STORAGE	D
C109	MAIL ROOM	D
C110	MECH PUMP	D
C111	FP/PLUMB PUMP ROOM	D
C112	SWITCHGEAR / ELECTRICAL	D
C112A	SWITCHGEAR / ELECTRICAL	D
C115	TELECOM	D
C200A	ENTRY	D
C200B	ENTRY	D
C202	CONF ROOM	D
C203	QUIET ROOM	D
C204	WOMEN	B
C205	MEN	C
C206	JANITOR	D
C207	SHOWER	A
C208	VENDING	D
C208A	STORAGE	D
C208B	STORAGE	D
C209	STORAGE	D
C211	SYMPOSIUM	D
C211A	STORAGE	D
C211B	STORAGE	D
C211C	STORAGE	D
C211D	SYMPOSIUM	D
C215	TELECOM	D
C300A	ENTRY	D
C300B	ENTRY	D
C300C		
C302	CONF ROOM	D
C303	STORAGE	D
C304	WOMEN	B
C305	MEN	C
C306	JANITOR	D
C307	STORAGE	D
C308	VENDING	D
C308A	STORAGE	D
C308B	STORAGE	D
C315	TELECOM	D
C400A	ENTRY	D
C400B	ENTRY	D
C402	CONF ROOM	D
C403	STORAGE	D
C404	WOMEN	B
C405	MEN	C
C406	JANITOR	D
C407	STORAGE	D
C408	VENDING	D
C408A	STORAGE	D
C408B	STORAGE	D
C415	TELECOM	D
C500	PENTHOUSE	D
C500A		D
C501	ELEVATOR MACHINE ROOM	D
C502	O&M ROOM	D
C601	ELEVATOR MACHINE ROOM	
N104	WAR ROOM	D
N106	WORK ROOM	D
N107	CONF ROOM	D
N107A	CONF ROOM	D
N108	OFFICE	D
N109	WORK ROOM	D
N111	IT	D
N111A	SERVER RM	D
N112	WAR ROOM	D
N114	OFFICE	D
N116	WORK ROOM	D
N117	STORAGE	D
N118	WAR ROOM	D
N130A	OFFICE	D
N130B	OFFICE	D
N130C	GRAPHICS	D
N130E	OFFICE	D
N130F	OFFICE	D
N130H	PROPOSAL LIB	D
N130I	OFFICE	D
N130J	PRODUCTION RM	D
N130K	PRODUCTION RM	D
N140	STAIR 1	E, F
N140A	STAIR 1	E, F
N144	WAR ROOM	D
N146	WORK ROOM	D
N147	ELEC ROOM	D
N148	OFFICE	D
N149	WORK ROOM	D
N150	WAR ROOM	D
N151	TEMP ROOM	D
N154	OFFICE	D
N156	WORK ROOM	D
N158	WAR ROOM	D
N202I	OFFICE	D
N204I	OFFICE	D
N206I	OFFICE	D
N207	CONF ROOM	D
N207A	CONF ROOM	D
N209I	OFFICE	D
N211I	OFFICE	D
N213I	OFFICE	D
N215	STORAGE	D
N223I	SMALL CONF	D
N230B		
N230C		
N230D		
N230E		
N230F		
N240	STAIR 1	E, F
N241I	SMALL CONF	D
N247	ELEC ROOM	D

Signage Type Schedule		
Mark	Room Name	Signage Type
N249I	OFFICE	D
N251	OFFICE	D
N254I	OFFICE	D
N256I	OFFICE	D
N258I	OFFICE	D
N302I	OFFICE	D
N307	CONF ROOM	D
N307A	CONF ROOM	D
N309I	OFFICE	D
N311I	OFFICE	D
N313I	OFFICE	D
N315	STORAGE	D
N323I	SMALL CONF	D
N340	STAIR 1	E, F
N341I	SMALL CONF	D
N347	ELEC ROOM	D
N349I	OFFICE	D
N351	OFFICE	D
N352I	OFFICE	D
N402I	OFFICE	D
N407	CONF ROOM	D
N407A	CONF ROOM	D
N409I	OFFICE	D
N411I	OFFICE	D
N413I	OFFICE	D
N415	STORAGE	D
N423I	SMALL CONF	D
N440	STAIR 1	E, F
N441I	SMALL CONF	D
N447	ELEC ROOM	D
N449I	OFFICE	D
N451I	OFFICE	D
N458I	OFFICE	D
N540	STAIR 1	D
S102I	OFFICE	D
S104I	OFFICE	D
S106I	OFFICE	D
S107	CONF ROOM	D
S107A	CONF ROOM	D
S109I	OFFICE	D
S111I	OFFICE	D
S113I	OFFICE	D
S115	STORAGE	D
S123	SMALL CONF	D
S123I	SMALL CONF	D
S130B		
S130C		
S130D		
S130E		
S130F		
S130G		
S140	STAIR 2	E, F
S140A	STAIR 2	E, F
S147	ELEC ROOM	D
S149I	OFFICE	D
S151	OFFICE	D
S154I	OFFICE	D
S156I	OFFICE	D
S158A	STORAGE	D
S158I	OFFICE	D
S202I	OFFICE	D
S204I	OFFICE	D
S206I	OFFICE	D
S207	CONF ROOM	D
S207A	CONF ROOM	D
S209I	OFFICE	D
S211I	OFFICE	D
S213I	OFFICE	D
S215	STORAGE	D
S223I	SMALL CONF	D
S230B		
S230C		
S230D		
S230E		
S230F		
S240	STAIR 2	E, F
S241I	SMALL CONF	D
S247	ELEC ROOM	D
S249I	OFFICE	D
S251I	OFFICE	D
S254I	OFFICE	D
S256I	OFFICE	D
S258A	STORAGE	D
S258I	OFFICE	D
S302I	OFFICE	D
S304I	OFFICE	D
S306I	OFFICE	D
S307	CONF ROOM	D
S307A	CONF ROMM	D
S309I	OFFICE	D
S311I	OFFICE	D
S313I	OFFICE	D
S315	STORAGE	D
S323I	SMALL CONF	D
S330B		
S330C		
S330D		
S330E		
S330F		
S340	STAIR 2	E, F
S341I	SMALL CONF	D
S347	ELEC ROOM	D
S349I	OFFICE	D
S351I	OFFICE	D
S354I	OFFICE	D
S356I	OFFICE	D
S358A	STORAGE	D
S358I	OFFICE	D
S402I	OFFICE	D
S407	CONF ROOM	D
S407A	CONF ROOM	D
S409I	OFFICE	D
S411I	OFFICE	D
S413I	OFFICE	D
S415	STORAGE	D

Signage Type Schedule		
Mark	Room Name	Signage Type
S430B		
S430C		
S430D		
S430E		
S430F		
S430I	LIBRARY	D
S440	STAIR 2	E, F
S447	ELEC ROOM	D
S449I	OFFICE	D
S451I	OFFICE	D
S458A	STORAGE	D
S458I	OFFICE	D
S540	STAIR 2	D

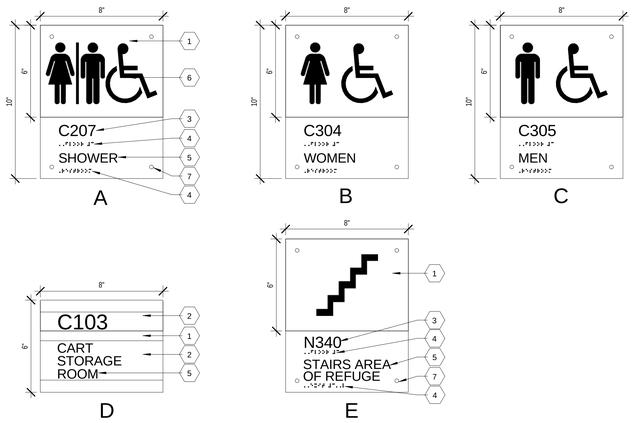

1 INTERIOR ROOM SIGN TYPES

A-902 REF. SCALE: 3" = 1'-0"

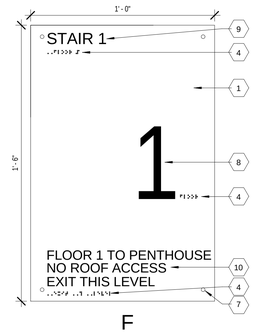

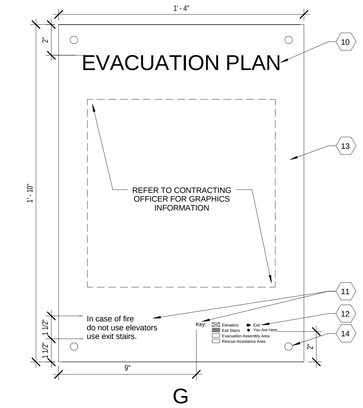

2 EVACUATION PLAN SIGN TYPE

A-902 REF. SCALE: 3" = 1'-0"

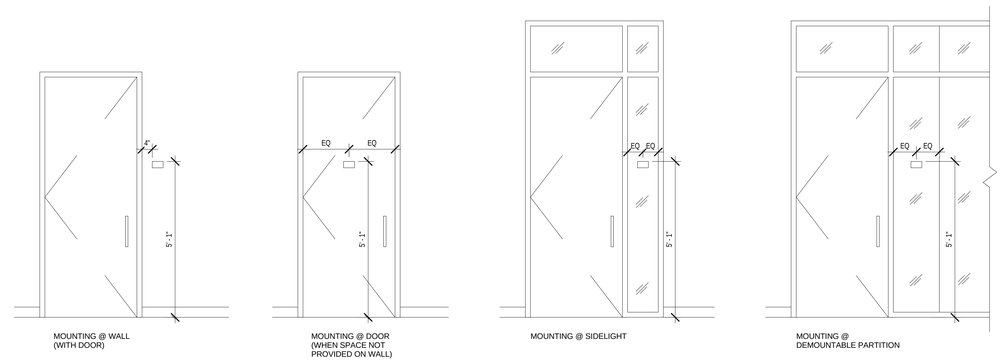

3 INTERIOR SIGNAGE MOUNTING CONDITIONS

A-902 REF. SCALE: 1/2" = 1'-0"

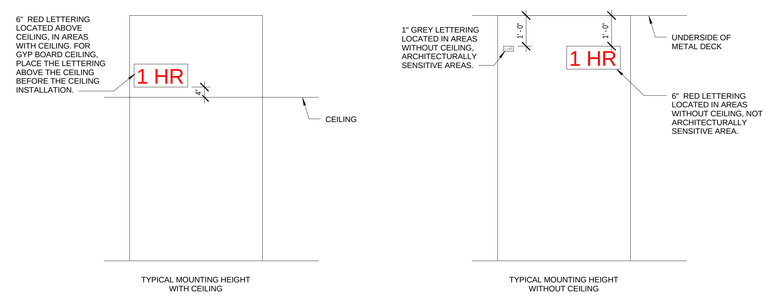

4 SIGNAGE FOR FIRE RATED CONSTRUCTION

A-902 REF. SCALE: 1/2" = 1'-0"

GENERAL NOTE FOR SIGNAGE FOR FIRE RATED CONSTRUCTION :

PLACE SIGNAGE FOR LABELING THE FIRE RATED CONSTRUCTION, AS INDICATED ON THE LS DRAWINGS, AT A MAXIMUM SPACING OF 20'-0", TYPICAL ON EACH FACE OF THE PARTITION UNOBSTRUCTED FROM VIEW. REQUIRE MINIMUM OF ONE LABEL PER WALL.

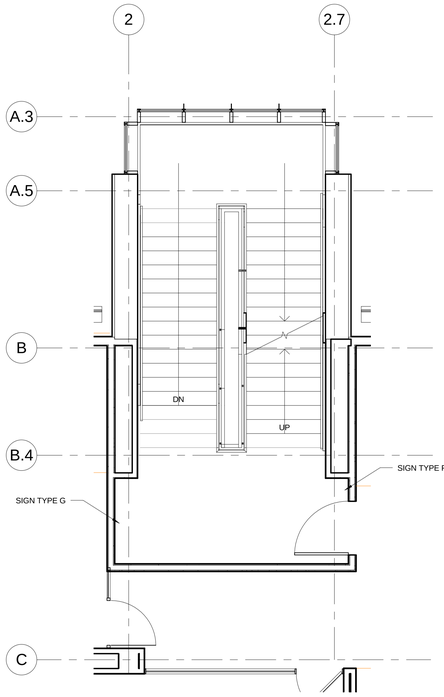

5 TYP. SIGNAGE LOCATION OF SIGN TYPE F & G

A-902 REF. A-912b SCALE: 1/4" = 1'-0"

SIGNAGE KEY NOTES:

1. ACRYLIC SIGN PANEL: ACRYLIC SHEET NON-GLARE, ABRASION RESISTANT. ALL VISIBLE SURFACE TO BE PAINTED WITH MATTHEWS PAINT LOW VOC LINE TO MATCH PT-1.
2. ACRYLIC SIGN PANEL: CLEAR ACRYLIC SHEET NON-GLARE, ABRASION RESISTANT IN FRONT OF KEYNOTE 1 FOR REMOVABLE COPY.
3. 1" ROOM NUMBER, RAISED 1/32" TO MEET ADA GUIDELINES. ALL VISIBLE SURFACES TO BE PAINTED BLACK.
4. GRADE II BRAILLE TO MEET ADA GUIDELINES. PAINTED TO MATCH CORRESPONDING SIGN FACE.
5. 5/8" UPPERCASE ROOM NAME, RAISED 1/32" TO MEET ADA GUIDELINES. ALL VISIBLE SURFACES TO BE PAINTED BLACK.
6. SILKSCREENED SYMBOL RAISED TO 1/32" TO MEET ADA GUIDELINES. ALL VISIBLE SURFACES TO BE PAINTED BLACK.
7. (4) #6 SCREWS, 3/4" FROM EDGE OF SIGN.
8. 5" UPPERCASE FLOOR NUMBER, RAISED 1/32" TO MEET ADA GUIDELINES. ALL VISIBLE SURFACES TO BE PAINTED BLACK.
9. 1-1/2" STAIR NUMBER, RAISED 1/32" TO MEET ADA GUIDELINES. ALL VISIBLE SURFACES TO BE PAINTED BLACK.
10. 1" UPPERCASE TEXT, RAISED 1/32" TO MEET ADA GUIDELINES. ALL VISIBLE SURFACES TO BE PAINTED BLACK.
11. 1/4" TEXT, RAISED 1/32" TO MEET ADA GUIDELINES. ALL VISIBLE SURFACES TO BE PAINTED BLACK.
12. 3/16" TEXT, RAISED 1/32" TO MEET ADA GUIDELINES. ALL VISIBLE SURFACES TO BE PAINTED BLACK.
13. 1/8" STAINLESS STEEL PANEL ON STAINLESS STEEL STAND-OFFS, SEPERATE 1/4" FROM REAR SURFACE.
14. 1/4" DIA. STAINLESS STEEL STAND-OFFS.

SIGNAGE GENERAL NOTES:

1. CHECK LIFE SAFETY DRAWINGS FOR EXIT LOCATIONS.
2. SUBMIT ALL SIGNS FOR APPROVAL OF DESIGN PRIOR TO CONSTRUCTION.
3. SIGNAGE TYPE G, PROVIDE UNIQUE SIGN FOR EACH LOCATION, INDICATING APPLICABLE FLOOR LEVEL, BUILDING PLAN, AND "YOU ARE HERE" LOCATION.
4. WHERE SIGN IS APPLIED TO GLASS, PROVIDE MASKING VINYL; PROVIDE ACRYLIC SIGN PANEL AT OPPOSITE GLASS SURFACE TO ALIGN.
5. APPLY VPH TAPE TO BACK OF SIGN AS REQUIRED; OFFSET 1/8" FROM EDGE OF SIGN TO ENSURE TAPE WOULD NOT BE EXPOSED.
6. FONT: HELVETICA MEDIUM US, ULC TEXT.
7. PROVIDE 1 EVACUATION PLAN SIGN PER ELEVATOR LOBBY ,1 PER EXTERIOR BUILDING ENTRANCES AND 1 PER STAIRWELL ENTRY.

100% SUBMITTAL

AECOM

AECOM TECHNICAL SERVICES, INC.
3101 WILSON BOULEVARD
SUITE 900
ARLINGTON, VA 22201

T: 703-682-4900 F: 703.682.4901
www.aecom.com

SEAL AREA

BOARD OF ARCHITECTS 10004 REGISTERED ARCHITECT STATE OF MARYLAND

KEY PLAN

REV	DATE	DESCRIPTION	S&R BR.	CUSTOMER	PM	SECT. HEAD

	INITIALS	DATE
DRAWN BY	LA/NS	
CHECKED BY	BW/MW	
A-E MANAGER	EW	
ENVIRONMENTAL BRANCH	JH	
SAFETY BRANCH	CS	
CM	MMD	
PM	RWP	
CUSTOMER	JWB	
ENG. BRANCH	DGL	

SIGNAGE TYPES & DETAILS

A-902

FLIGHT PROJECTS BUILDING

NATIONAL AERONAUTICS AND SPACE ADMINISTRATION

GODDARD SPACE FLIGHT CENTER GREENBELT, MARYLAND
FACILITIES MANAGEMENT DIVISION

DATE ISSUED	CoF CODE OR WR#	AECOM PROJECT NO.	SCALE
10/12/2012	12GXAZ	60187636	As indicated

FILE DATE: 10/11/2012 4:17:24 PM

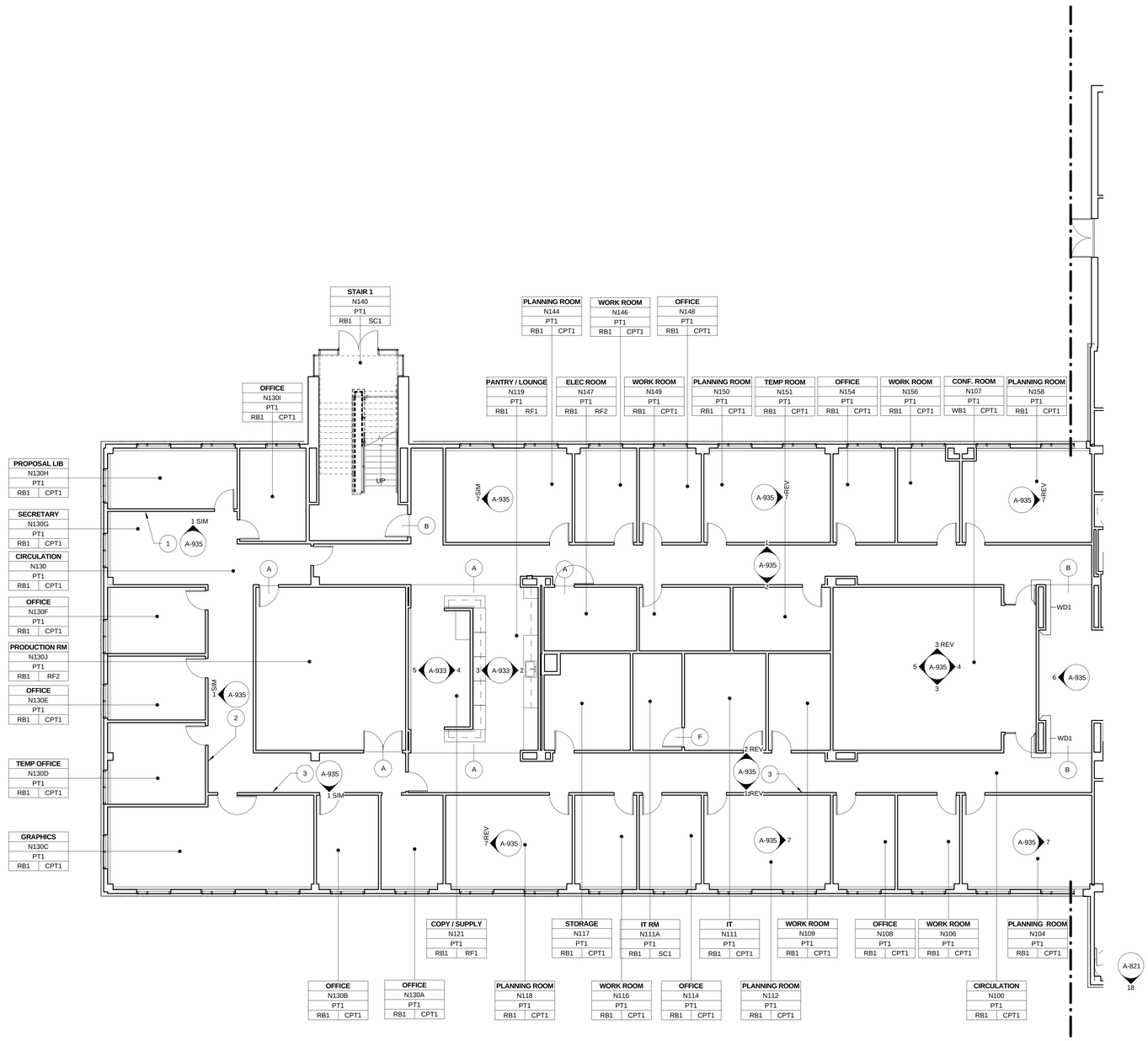

LEVEL 1 - FINISH PLAN SEGMENT A

1 | A-911a REF. A-301 SCALE: 1/8" = 1'-0"

NORTH

1/8"=1'-0" 8' 4' 0 8' 16'

FLOORING TRANSITION DETAILS

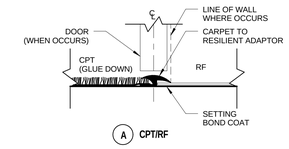

A CPT/RF

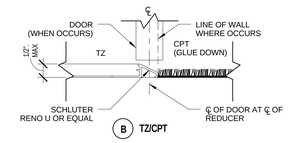

B TZ/CPT

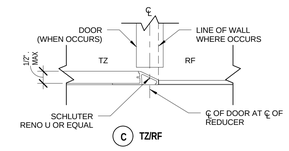

C TZ/RF

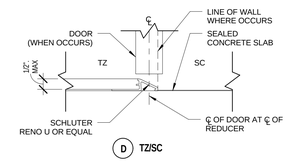

D TZ/SC

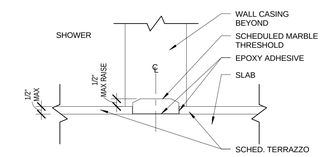

E MARBLE THRESHOLD

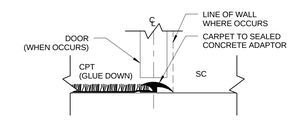

F CPT/SC

FINISH KEY NOTES:

1. TWO BAY CLERESTORY
2. ONE BAY CLERESTORY PER OFFICE. (TYPICAL OF 3)
3. ONE BAY CLERESTORY AT OFFICE SPACE. TWO BAY CLERESTORY AT GRAPHICS ROOM. (TYPICAL OF 10)
4. BUILT-IN CANTILEVERED CREDENZA, TYPICAL OF 2.

100% SUBMITTAL

AECOM

AECOM TECHNICAL SERVICES, INC.
3101 WILSON BOULEVARD
SUITE 900
ARLINGTON, VA 22201

T: 703-682-4900 F: 703.682.4901
www.aecom.com

SEAL AREA

BOARD OF ARCHITECTS 10394 EDWARD L. WEISER STATE OF MARYLAND

KEY PLAN

SEGMENT - A

REV	DATE	DESCRIPTION	S&R BR.	CUSTOMER	PM	SECT. HEAD

	INITIALS	DATE
DRAWN BY	LA/NS	
CHECKED BY	BW/MW	
A-E MANAGER	EW	
ENVIRONMENTAL BRANCH	JH	
SAFETY BRANCH	CS	
CM	MMD	
PM	RWP	
CUSTOMER	JWB	
ENG. BRANCH	DGL	
ARCHITECTURE		

LEVEL 1 - FINISH PLAN SEGMENT A

A-911a

FLIGHT PROJECTS BUILDING

NATIONAL AERONAUTICS AND SPACE ADMINISTRATION
GODDARD SPACE FLIGHT CENTER GREENBELT, MARYLAND
FACILITIES MANAGEMENT DIVISION

DATE ISSUED	CoF CODE OR WR#	AECOM PROJECT NO.	SCALE
10/12/2012	12GXAZ	60187636	As indicated

FILE DATE: 10/11/2012 5:47:36 PM

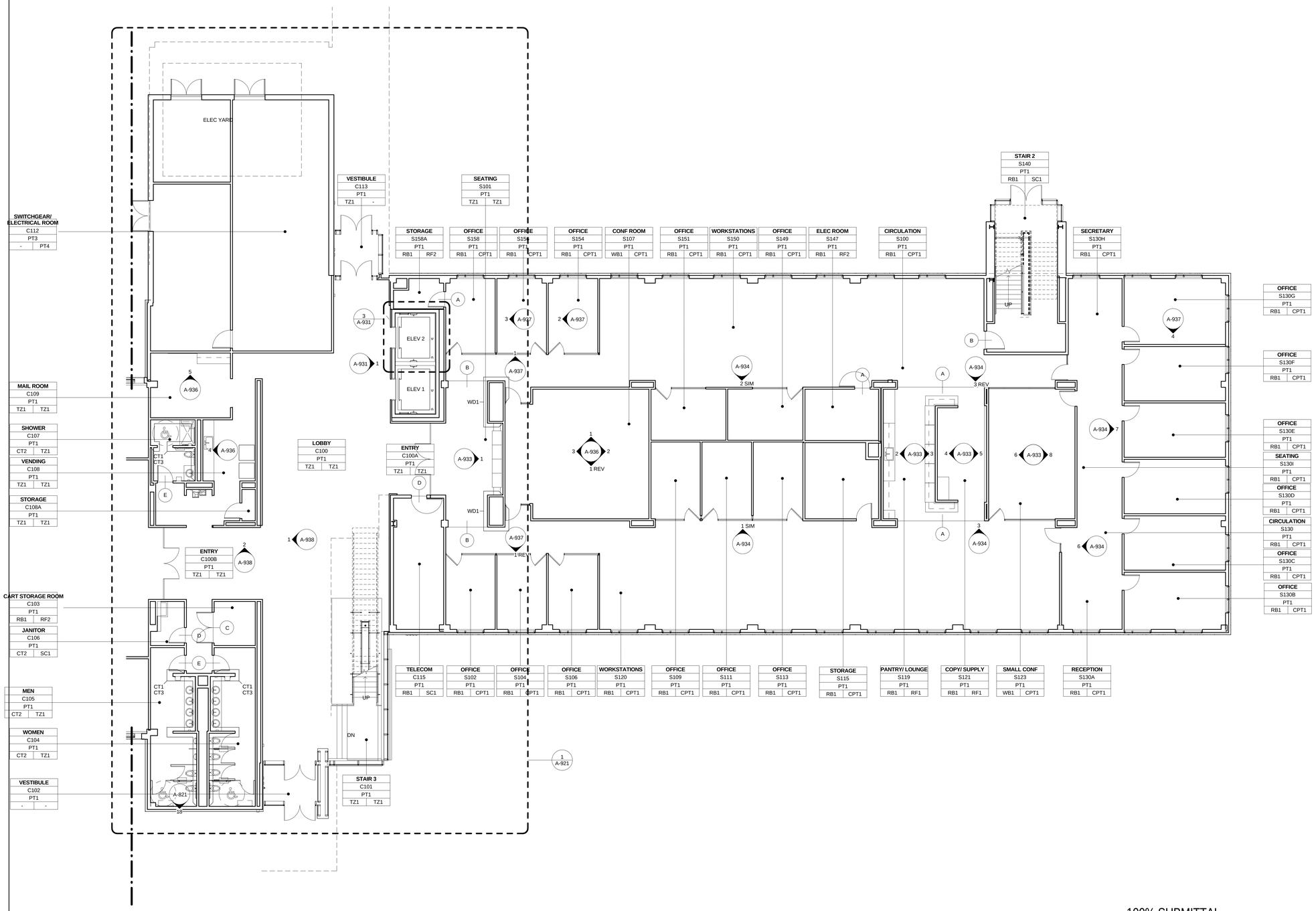

1 LEVEL 1 - FINISH PLAN SEGMENT B

A-911b | REF. A-301 SCALE: 1/8" = 1'-0"

FLOORING TRANSITION DETAILS

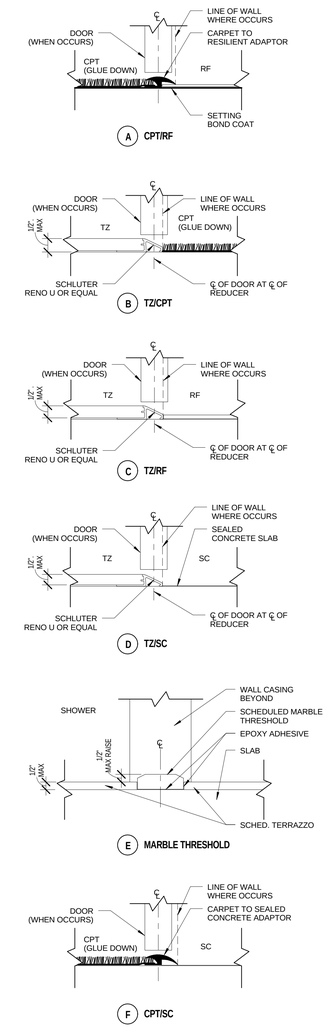

FINISH KEY NOTES:

1. TWO BAY CLERESTORY
2. ONE BAY CLERESTORY PER OFFICE. (TYPICAL OF 3)
3. ONE BAY CLERESTORY AT OFFICE SPACE. TWO BAY CLERESTORY AT GRAPHICS ROOM. (TYPICAL OF 10)
4. BUILT-IN CANTILEVERED CREDENZA, TYPICAL OF 2.

100% SUBMITTAL

NORTH

1/8"=1'-0" 8' 4' 0 8' 16'

AECOM

AECOM TECHNICAL SERVICES, INC.
3101 WILSON BOULEVARD
SUITE 900
ARLINGTON, VA 22201

T: 703-682-4900 F: 703.682.4901
www.aecom.com

SEAL AREA

BOARD OF ARCHITECTS 10094 ERNEST D. WEISER STATE OF MARYLAND

KEY PLAN

SEGMENT - B

REV	DATE	DESCRIPTION	S&R BR.	CUSTOMER	PM	SECT. HEAD

	INITIALS	DATE
DRAWN BY	LA/NS	
CHECKED BY	BW/MW	
A-E MANAGER	EW	
ENVIRONMENTAL BRANCH	JH	
SAFETY BRANCH	CS	
CM	MMD	
PM	RWP	
CUSTOMER	JWB	
ENG. BRANCH	DGL	
ARCHITECTURE		

LEVEL 1 - FINISH PLAN SEGMENT B

A-911b

FLIGHT PROJECTS BUILDING

NATIONAL AERONAUTICS AND SPACE ADMINISTRATION
GODDARD SPACE FLIGHT CENTER GREENBELT, MARYLAND
FACILITIES MANAGEMENT DIVISION

DATE ISSUED	CoF CODE OR WR#	AECOM PROJECT NO.	SCALE
10/12/2012	12GXAZ	60187636	As indicated

FILE DATE: 10/11/2012 4:29:27 PM

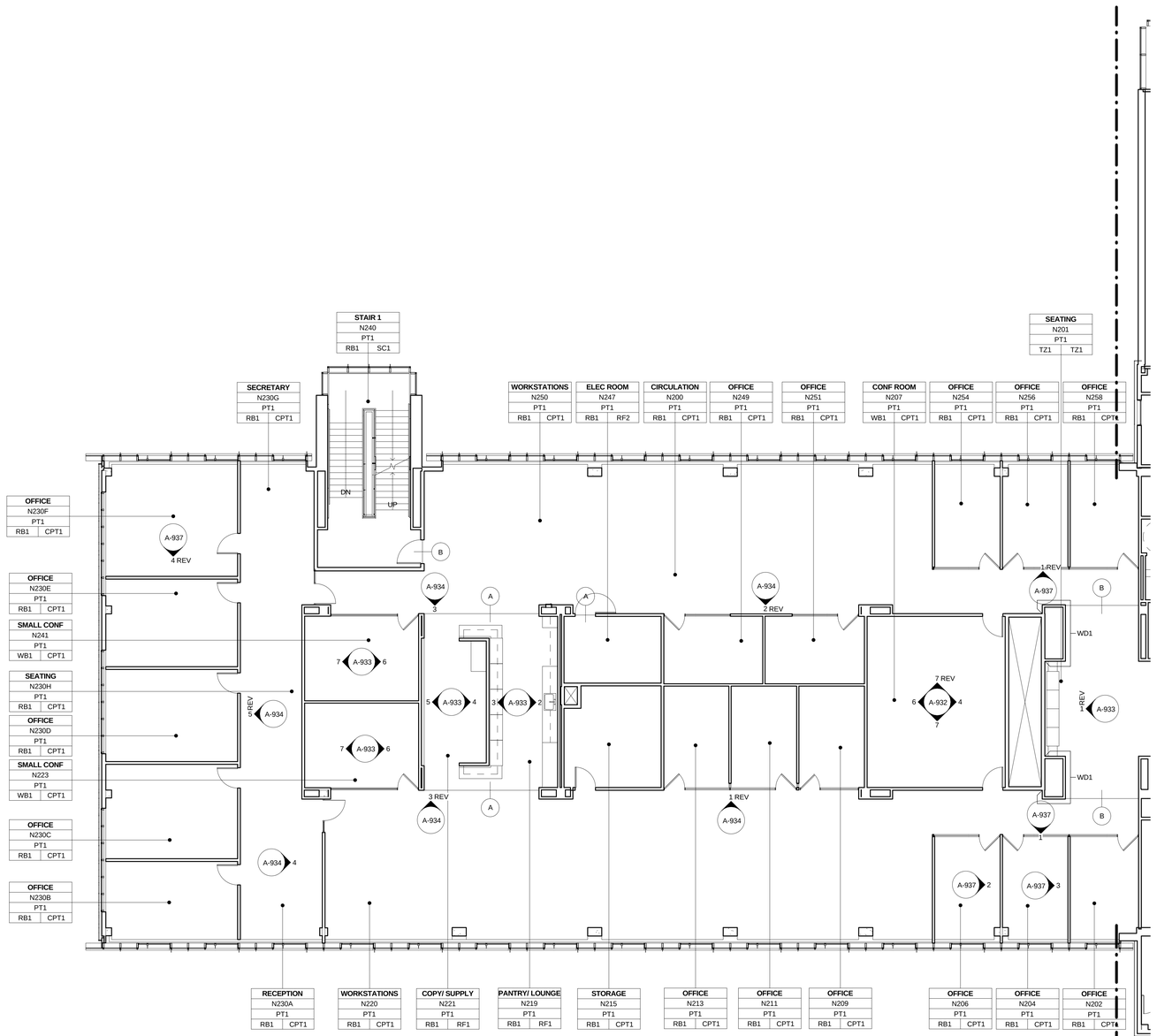

LEVEL 2 - FINISH PLAN
SEGMENT A

1 | A-912a REF. A-301 SCALE: 1/8" = 1'-0"

NORTH

1/8"=1'-0" 8' 4' 0 8' 16'

FLOORING TRANSITION DETAILS

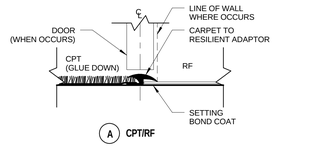

A CPT/RF

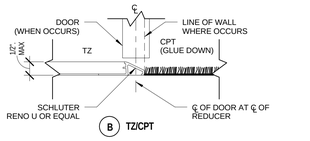

B TZ/CPT

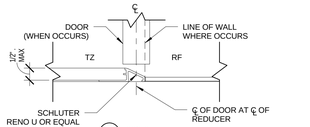

C TZ/RF

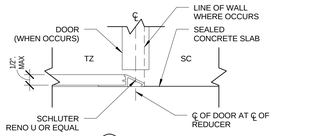

D TZ/SC

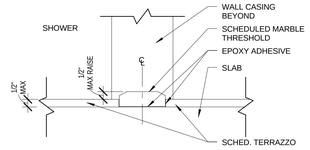

E MARBLE THRESHOLD

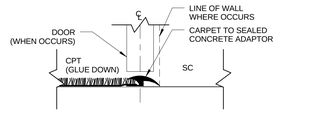

F CPT/SC

FINISH KEY NOTES:

1. TWO BAY CLERESTORY
2. ONE BAY CLERESTORY PER OFFICE. (TYPICAL OF 3)
3. ONE BAY CLERESTORY AT OFFICE SPACE. TWO BAY CLERESTORY AT GRAPHICS ROOM. (TYPICAL OF 10)
4. BUILT-IN CANTILEVERED CREDENZA, TYPICAL OF 2.

100% SUBMITTAL

AECOM

AECOM TECHNICAL SERVICES, INC.
3101 WILSON BOULEVARD
SUITE 900
ARLINGTON, VA 22201

T: 703-682-4900 F: 703.682.4901
www.aecom.com

SEAL AREA

BOARD OF ARCHITECTURE 10084 STATE OF MARYLAND

KEY PLAN

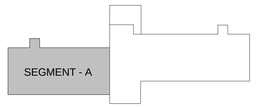

REV	DATE	DESCRIPTION	S&R BR.	CUSTOMER	PM	SECT. HEAD

	INITIALS	DATE
DRAWN BY	LA/NS	
CHECKED BY	BW/MW	
A-E MANAGER	EW	
ENVIRONMENTAL BRANCH	JH	
SAFETY BRANCH	CS	
CM	MMD	
PM	RWP	
CUSTOMER	JWB	
ENG. BRANCH	DGL	
ARCHITECTURE		

LEVEL 2 - FINISH PLAN
SEGMENT A

A-912a

FLIGHT PROJECTS BUILDING

NATIONAL AERONAUTICS AND SPACE ADMINISTRATION
GODDARD SPACE FLIGHT CENTER GREENBELT, MARYLAND
FACILITIES MANAGEMENT DIVISION

DATE ISSUED	CoF CODE OR WR#	AECOM PROJECT NO.	SCALE
10/12/2012	12GXAZ	60187636	As indicated

FILE DATE: 10/11/2012 4:29:39 PM

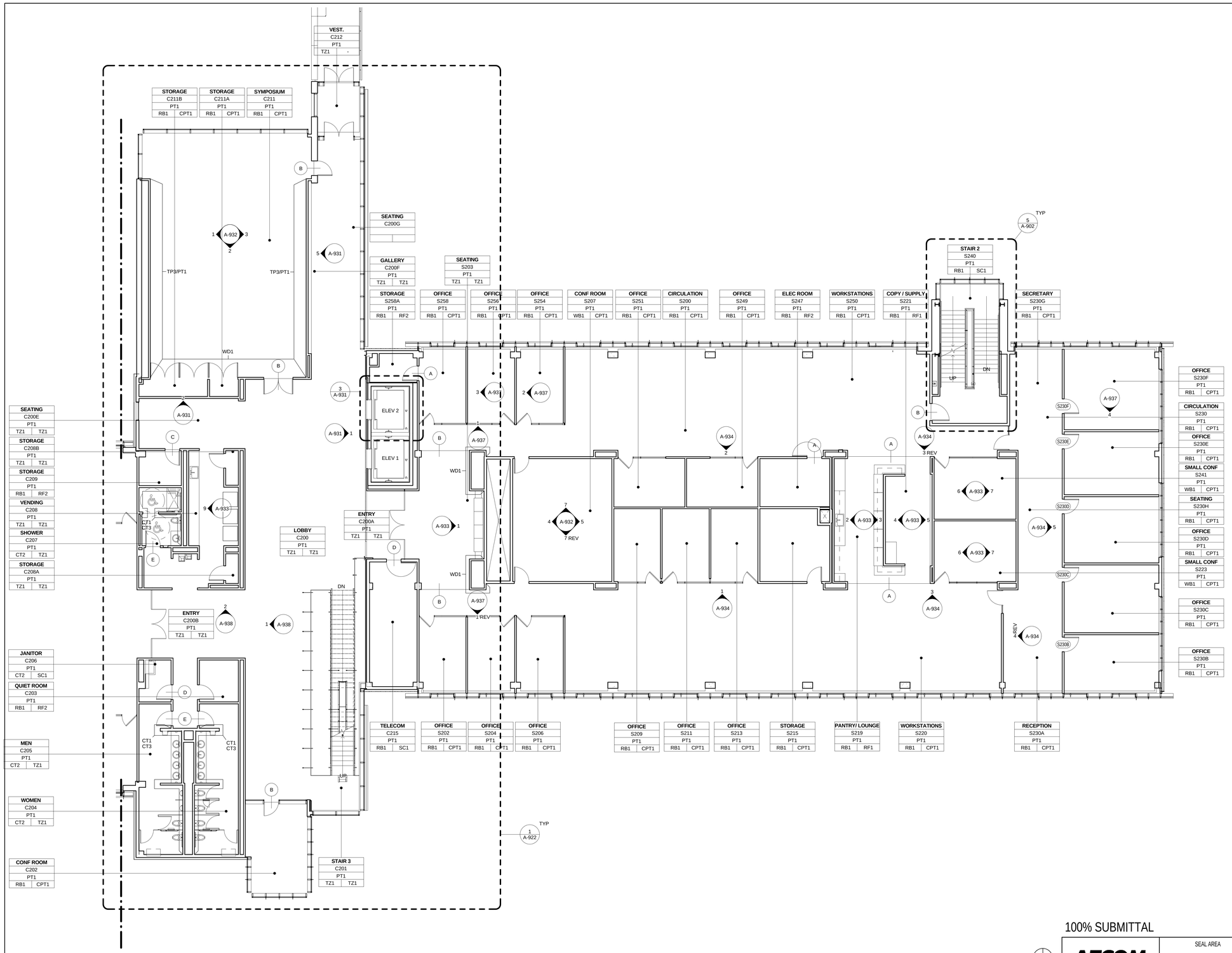

LEVEL 2 - FINISH PLAN SEGMENT B

1 A-912b REF. A-301 SCALE: 1/8" = 1'-0"

FLOORING TRANSITION DETAILS

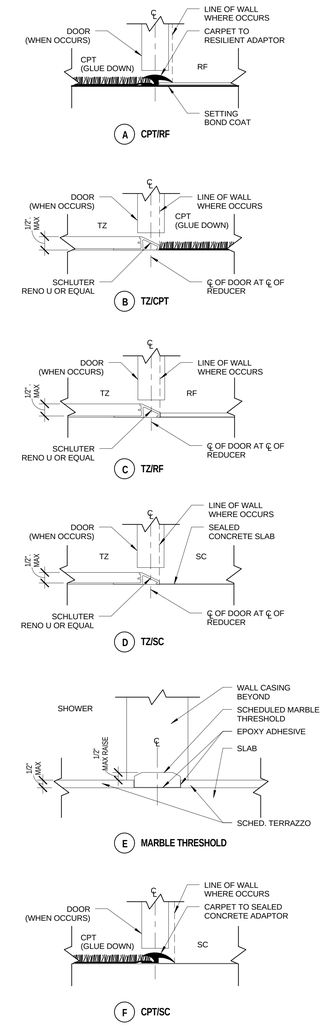

FINISH KEY NOTES:

1. TWO BAY CLERESTORY
2. ONE BAY CLERESTORY PER OFFICE. (TYPICAL OF 3)
3. ONE BAY CLERESTORY AT OFFICE SPACE. TWO BAY CLERESTORY AT GRAPHICS ROOM. (TYPICAL OF 10)

100% SUBMITTAL

NORTH

1/8"=1'-0" 8' 4' 0 8' 16'

AECOM
AECOM TECHNICAL SERVICES, INC.
3101 WILSON BOULEVARD
SUITE 900
ARLINGTON, VA 22201
T: 703-682-4900 F: 703.682.4901
www.aecom.com

SEAL AREA

BOARD OF ARCHITECTS 10164 EDWARD D. WEBER REGISTERED ARCHITECT STATE OF MARYLAND

KEY PLAN

SEGMENT - B

REV	DATE	DESCRIPTION	S&R BR.	CUSTOMER	PM	SECT. HEAD

	INITIALS	DATE
DRAWN BY	LA/NS	
CHECKED BY	BW/MW	
A-E MANAGER	EW	
ENVIRONMENTAL BRANCH	JH	
SAFETY BRANCH	CS	
CM	MMD	
PM	RWP	
CUSTOMER	JWB	
ENG. BRANCH	DGL	
ARCHITECTURE		

LEVEL 2 - FINISH PLAN SEGMENT B

A-912b

FLIGHT PROJECTS BUILDING

NATIONAL AERONAUTICS AND SPACE ADMINISTRATION

GODDARD SPACE FLIGHT CENTER GREENBELT, MARYLAND
FACILITIES MANAGEMENT DIVISION

DATE ISSUED	CoF CODE OR WR#	AECOM PROJECT NO.	SCALE
10/12/2012	12GXAZ	60187636	As indicated

FILE DATE: 10/11/2012 4:29:53 PM

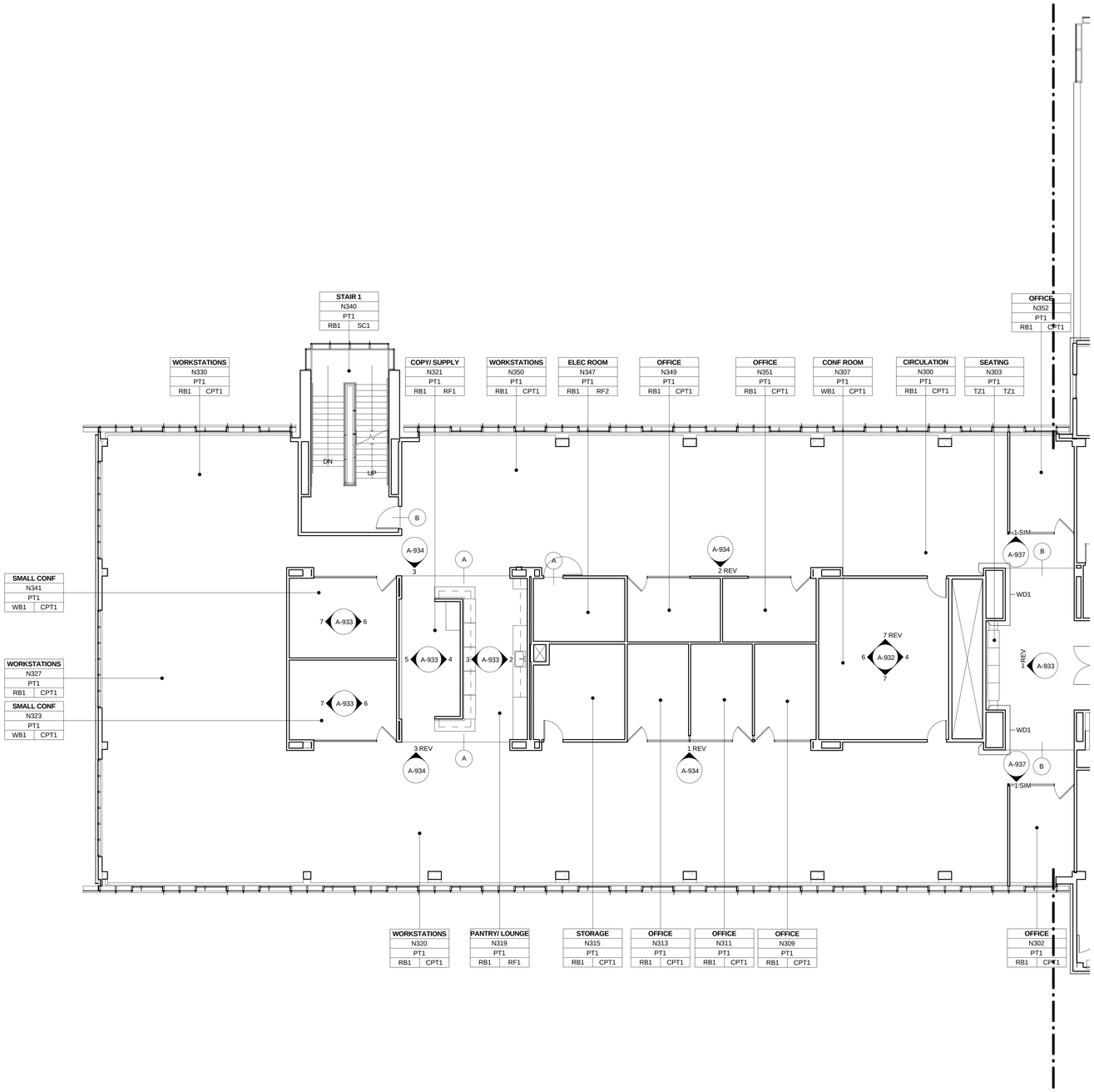

LEVEL 3 - FINISH PLAN SEGMENT A

1 | A-913a REF. A-301 SCALE: 1/8" = 1'-0"

FLOORING TRANSITION DETAILS

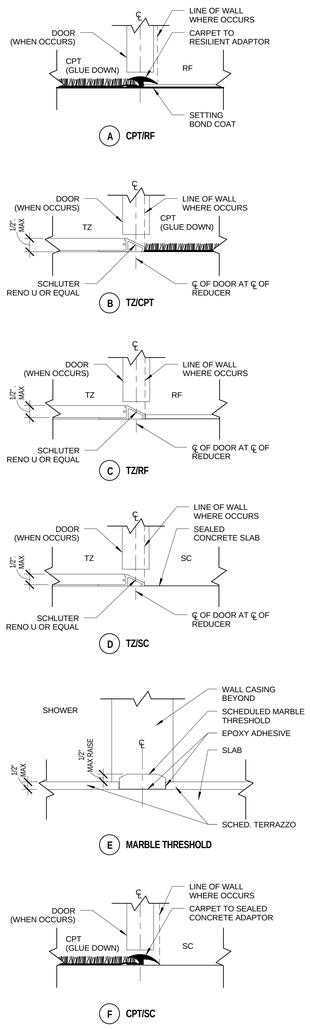

FINISH KEY NOTES:

1. TWO BAY CLERESTORY
2. ONE BAY CLERESTORY PER OFFICE. (TYPICAL OF 3)
3. ONE BAY CLERESTORY AT OFFICE SPACE. TWO BAY CLERESTORY AT GRAPHICS ROOM. (TYPICAL OF 10)
4. BUILT-IN CANTILEVERED CREDENZA, TYPICAL OF 2.

100% SUBMITTAL

NORTH

1/8"=1'-0" 8' 4' 0 8' 16'

AECOM

AECOM TECHNICAL SERVICES, INC.
3101 WILSON BOULEVARD
SUITE 900
ARLINGTON, VA 22201

T: 703-682-4900 F: 703.682.4901
www.aecom.com

SEAL AREA

BOARD OF ARCHITECTS 10004 EDWARD W. WEIDNER STATE OF MARYLAND

KEY PLAN

SEGMENT - A

REV	DATE	DESCRIPTION	S&R BR.	CUSTOMER	PM	SECT. HEAD

	INITIALS	DATE
DRAWN BY	LA/NS	
CHECKED BY	BW/MW	
A-E MANAGER	EW	
ENVIRONMENTAL BRANCH	JH	
SAFETY BRANCH	CS	
CM	MMD	
PM	RWP	
CUSTOMER	JWB	
ENG. BRANCH	DGL	
ARCHITECTURE		

LEVEL 3 - FINISH PLAN SEGMENT A

A-913a

FLIGHT PROJECTS BUILDING

NATIONAL AERONAUTICS AND SPACE ADMINISTRATION

GODDARD SPACE FLIGHT CENTER GREENBELT, MARYLAND
FACILITIES MANAGEMENT DIVISION

DATE ISSUED	CoF CODE OR WR#	AECOM PROJECT NO.	SCALE
10/12/2012	12GXAZ	60187636	As indicated

FILE DATE: 10/11/2012 4:30:05 PM

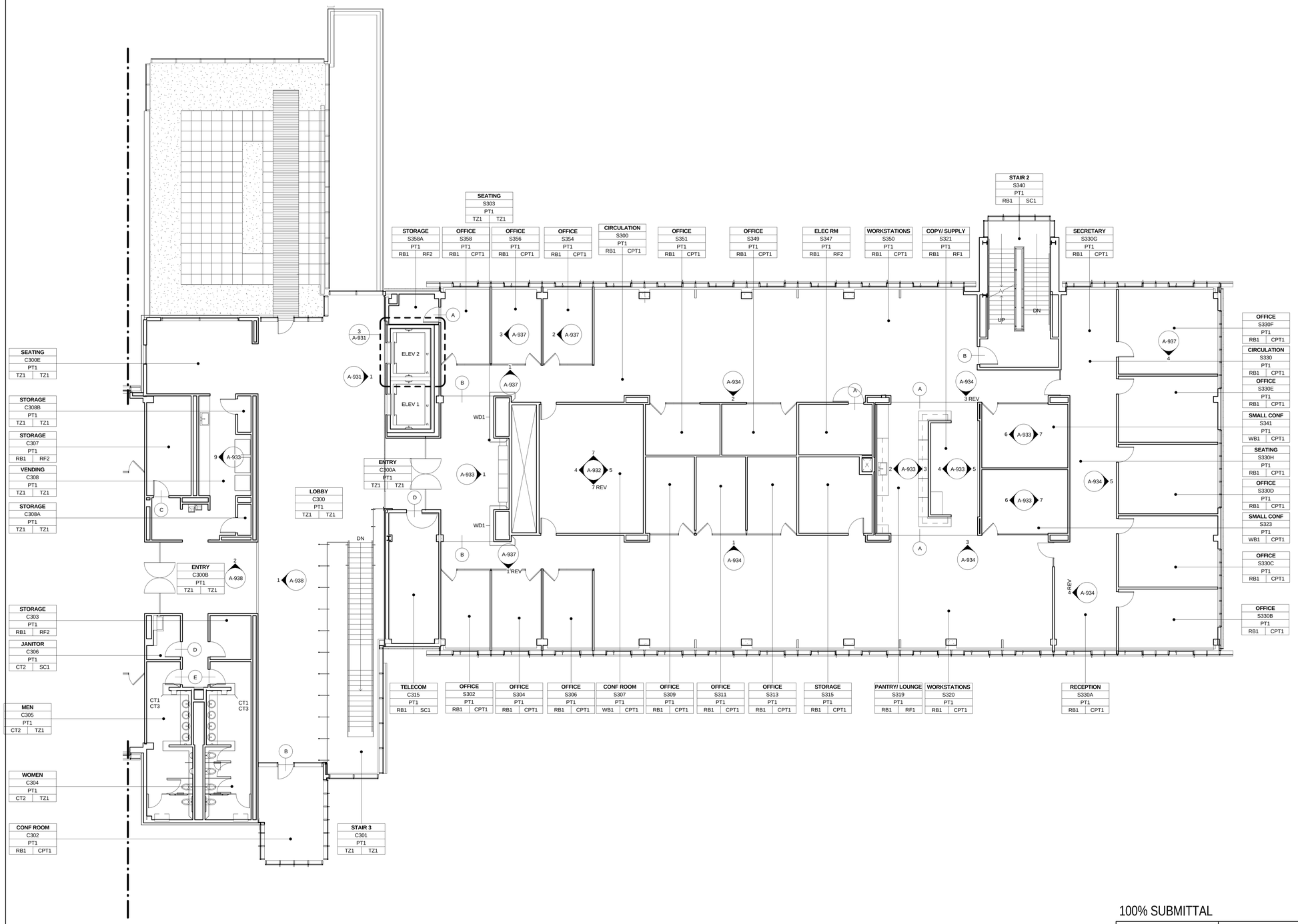

LEVEL 3 - FINISH PLAN SEGMENT B

1 A-913b REF. A-301 SCALE: 1/8" = 1'-0"

FLOORING TRANSITION DETAILS

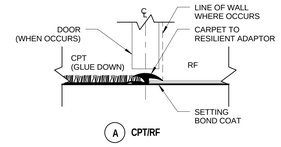

A CPT/RF

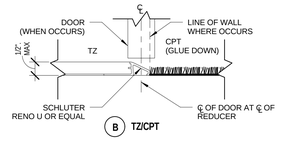

B TZ/CPT

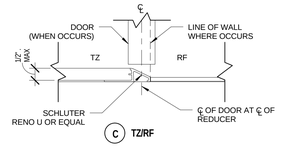

C TZ/RF

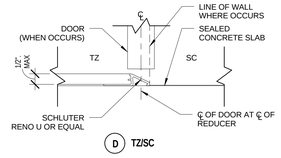

D TZ/SC

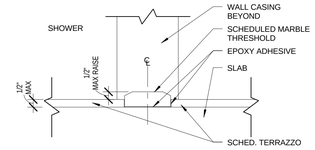

E MARBLE THRESHOLD

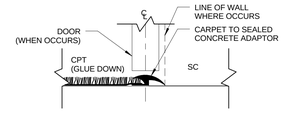

F CPT/SC

FINISH KEY NOTES:

1. TWO BAY CLERESTORY
2. ONE BAY CLERESTORY PER OFFICE. (TYPICAL OF 3)
3. ONE BAY CLERESTORY AT OFFICE SPACE. TWO BAY CLERESTORY AT GRAPHICS ROOM. (TYPICAL OF 10)
4. BUILT-IN CANTILEVERED CREDENZA, TYPICAL OF 2.

100% SUBMITTAL

NORTH

1/8"=1'-0" 8' 4' 0 8' 16'

AECOM
AECOM TECHNICAL SERVICES, INC.
3101 WILSON BOULEVARD
SUITE 900
ARLINGTON, VA 22201
T: 703-682-4900 F: 703.682.4901
www.aecom.com

SEAL AREA

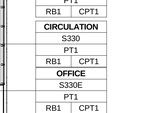

KEY PLAN

REV	DATE	DESCRIPTION	S&R BR.	CUSTOMER	PM	SECT. HEAD

	INITIALS	DATE
DRAWN BY	LA/NS	
CHECKED BY	BW/MW	
A-E MANAGER	EW	
ENVIRONMENTAL BRANCH	JH	
SAFETY BRANCH	CS	
CM	MMD	
PM	RWP	
CUSTOMER	JWB	
ENG. BRANCH	DGL	
ARCHITECTURE		

LEVEL 3 - FINISH PLAN SEGMENT B

A-913b

FLIGHT PROJECTS BUILDING

NATIONAL AERONAUTICS AND SPACE ADMINISTRATION

GODDARD SPACE FLIGHT CENTER GREENBELT, MARYLAND
FACILITIES MANAGEMENT DIVISION

DATE ISSUED	CoF CODE OR WR#	AECOM PROJECT NO.	SCALE
10/12/2012	12GXAZ	60187636	As indicated

FILE DATE: 10/11/2012 4:30:18 PM

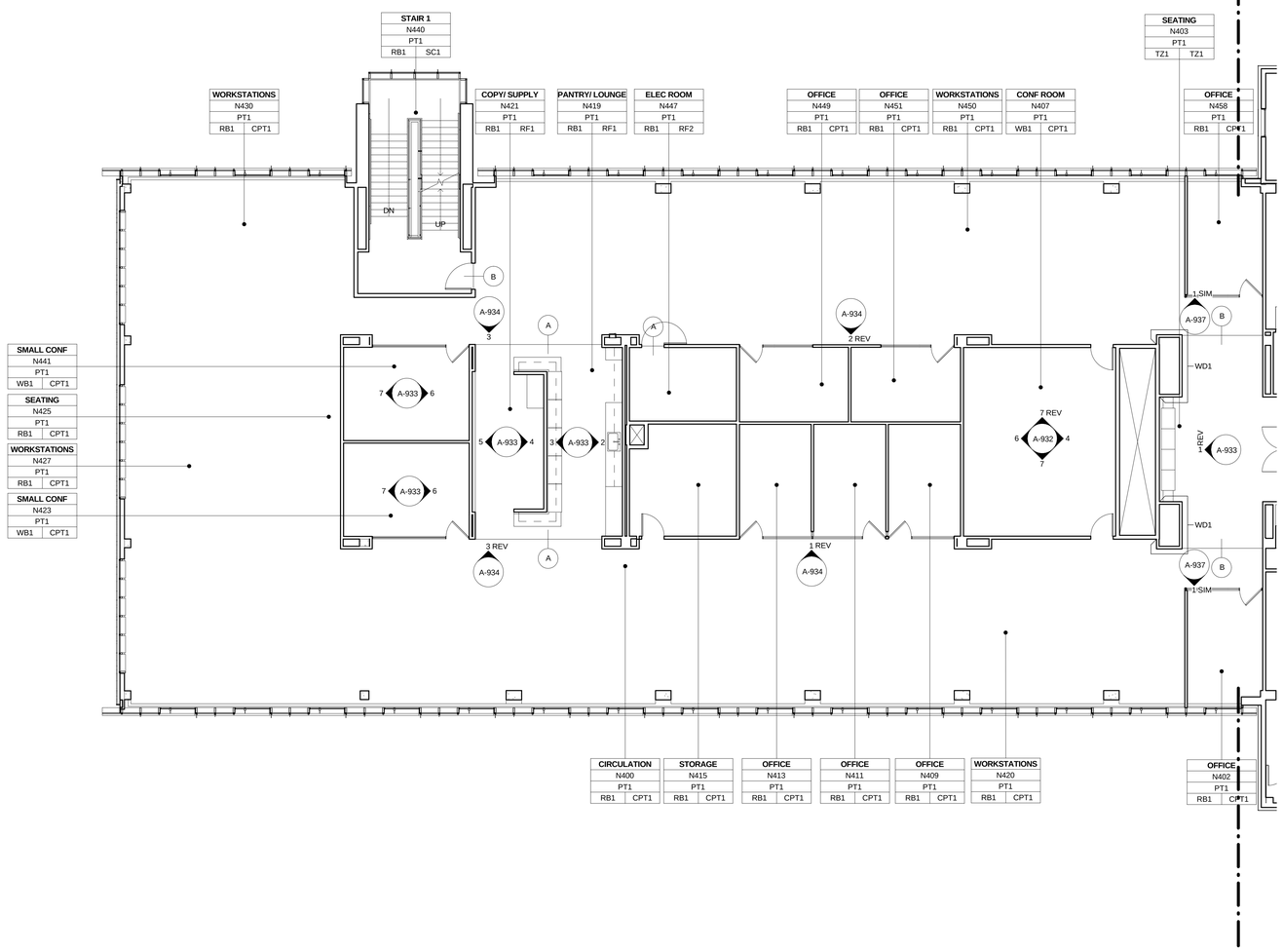

LEVEL 4 - FINISH PLAN SEGMENT A

1 | A-914a | REF. A-301 | SCALE: 1/8" = 1'-0"

FLOORING TRANSITION DETAILS

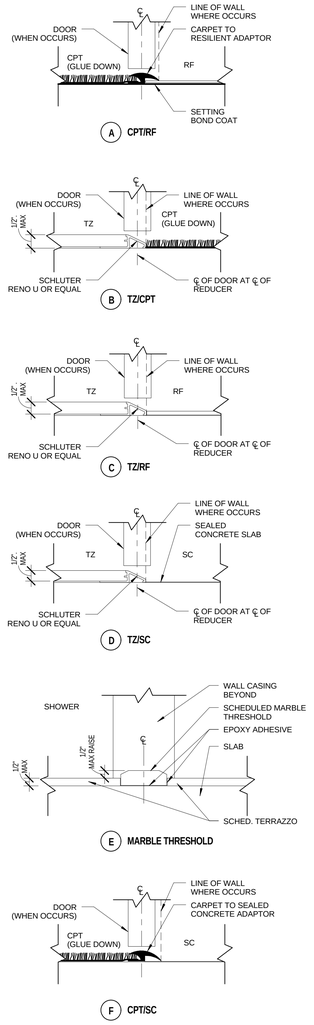

FINISH KEY NOTES:

1. TWO BAY CLERESTORY
2. ONE BAY CLERESTORY PER OFFICE. (TYPICAL OF 3)
3. ONE BAY CLERESTORY AT OFFICE SPACE. TWO BAY CLERESTORY AT GRAPHICS ROOM. (TYPICAL OF 10)
4. BUILT-IN CANTILEVERED CREDENZA, TYPICAL OF 2.

100% SUBMITTAL

NORTH

1/8"=1'-0" 8' 4' 0 8' 16'

AECOM

AECOM TECHNICAL SERVICES, INC.
3101 WILSON BOULEVARD
SUITE 900
ARLINGTON, VA 22201

T: 703-682-4900 F: 703.682.4901
www.aecom.com

SEAL AREA

BOARD OF ARCHITECTS 10094 EDWARD W. WARNER STATE OF MARYLAND

KEY PLAN

SEGMENT - A

REV	DATE	DESCRIPTION	S&R BR.	CUSTOMER	PM	SECT. HEAD

	INITIALS	DATE
DRAWN BY	LA/NS	
CHECKED BY	BW/MW	
A-E MANAGER	EW	
ENVIRONMENTAL BRANCH	JH	
SAFETY BRANCH	CS	
CM	MMD	
PM	RWP	
CUSTOMER	JWB	
ENG. BRANCH	DGL	
ARCHITECTURE		

LEVEL 4 - FINISH PLAN SEGMENT A

A-914a

FLIGHT PROJECTS BUILDING

NATIONAL AERONAUTICS AND SPACE ADMINISTRATION

GODDARD SPACE FLIGHT CENTER GREENBELT, MARYLAND
FACILITIES MANAGEMENT DIVISION

DATE ISSUED	CoF CODE OR W/O#	AECOM PROJECT NO.	SCALE
10/12/2012	12GXAZ	60187636	As indicated

FILE DATE: 10/11/2012 4:30:30 PM

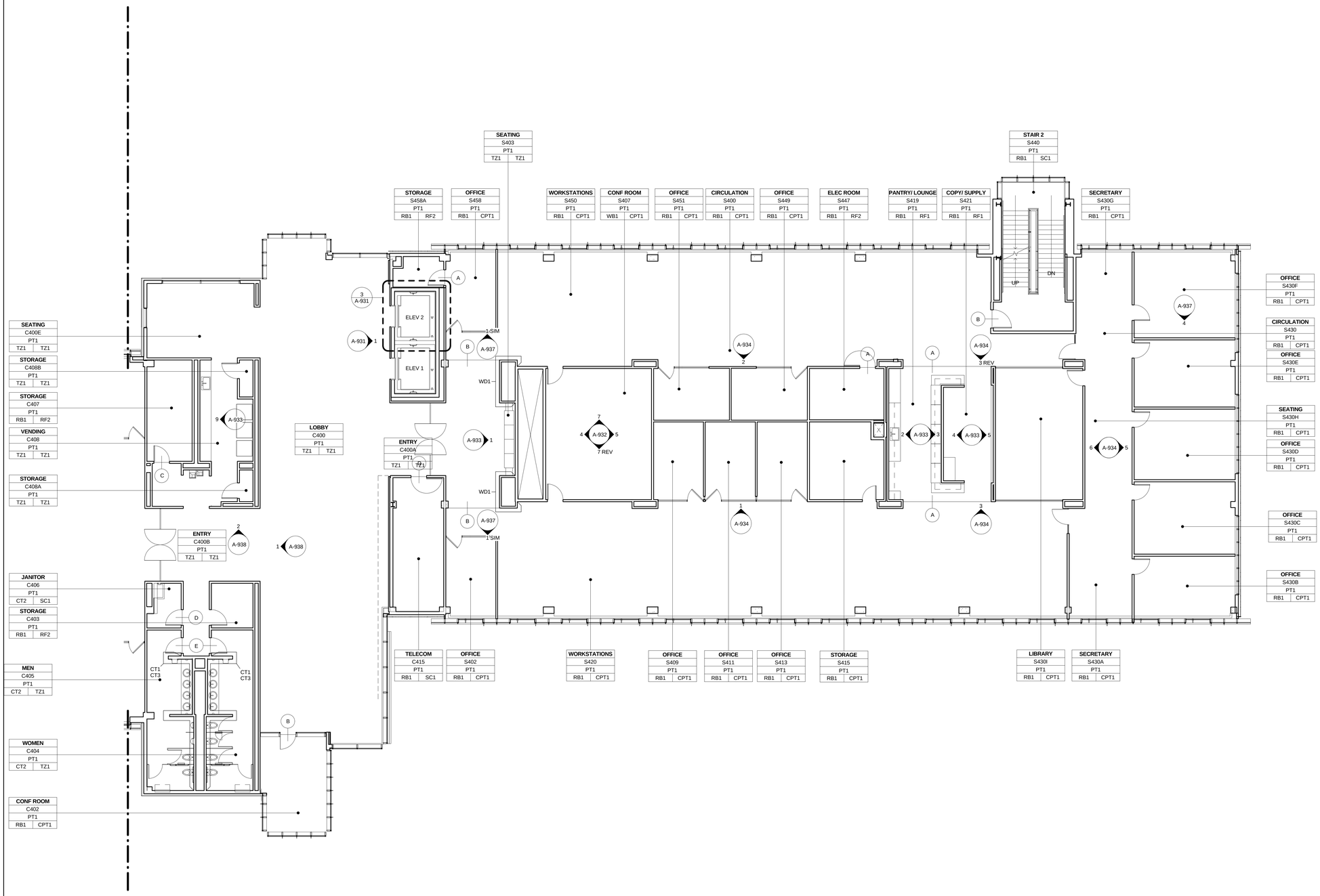

1 LEVEL 4 - FINISH PLAN SEGMENT B

A-914b | REF. A-301 SCALE: 1/8" = 1'-0"

FLOORING TRANSITION DETAILS

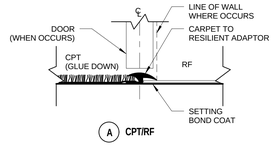

A CPT/RF

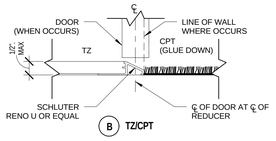

B TZ/CPT

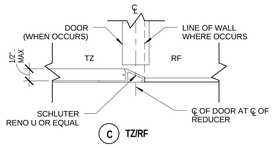

C TZ/RF

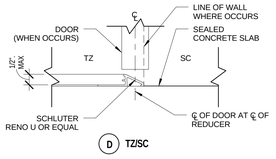

D TZ/SC

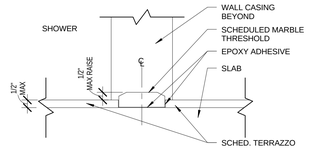

E MARBLE THRESHOLD

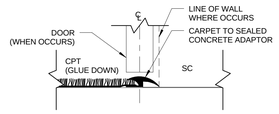

F CPT/SC

FINISH KEY NOTES:

1. TWO BAY CLERESTORY
2. ONE BAY CLERESTORY PER OFFICE. (TYPICAL OF 3)
3. ONE BAY CLERESTORY AT OFFICE SPACE. TWO BAY CLERESTORY AT GRAPHICS ROOM. (TYPICAL OF 10)
4. BUILT-IN CANTILEVERED CREDENZA, TYPICAL OF 2.

NORTH

1/8"=1'-0" 8' 4' 0 8' 16'

100% SUBMITTAL

AECOM

AECOM TECHNICAL SERVICES, INC.
3101 WILSON BOULEVARD
SUITE 900
ARLINGTON, VA 22201

T: 703-682-4900 F: 703.682.4901
www.aecom.com

SEAL AREA

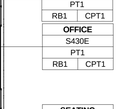

KEY PLAN

REV	DATE	DESCRIPTION	S&R BR.	CUSTOMER	PM	SECT. HEAD

	INITIALS	DATE
DRAWN BY	LA/NS	
CHECKED BY	BW/MW	
A-E MANAGER	EW	
ENVIRONMENTAL BRANCH	JH	
SAFETY BRANCH	CS	
CM	MMD	
PM	RWP	
CUSTOMER	JWB	
ENG. BRANCH	DGL	
ARCHITECTURE		

LEVEL 4 - FINISH PLAN
SEGMENT B

A-914b

FLIGHT PROJECTS BUILDING

NATIONAL AERONAUTICS AND SPACE ADMINISTRATION

GODDARD SPACE FLIGHT CENTER GREENBELT, MARYLAND
FACILITIES MANAGEMENT DIVISION

DATE ISSUED	CoF CODE OR WR#	AECOM PROJECT NO.	SCALE
10/12/2012	12GXAZ	60187636	As indicated

FILE DATE: 10/11/2012 4:30:42 PM

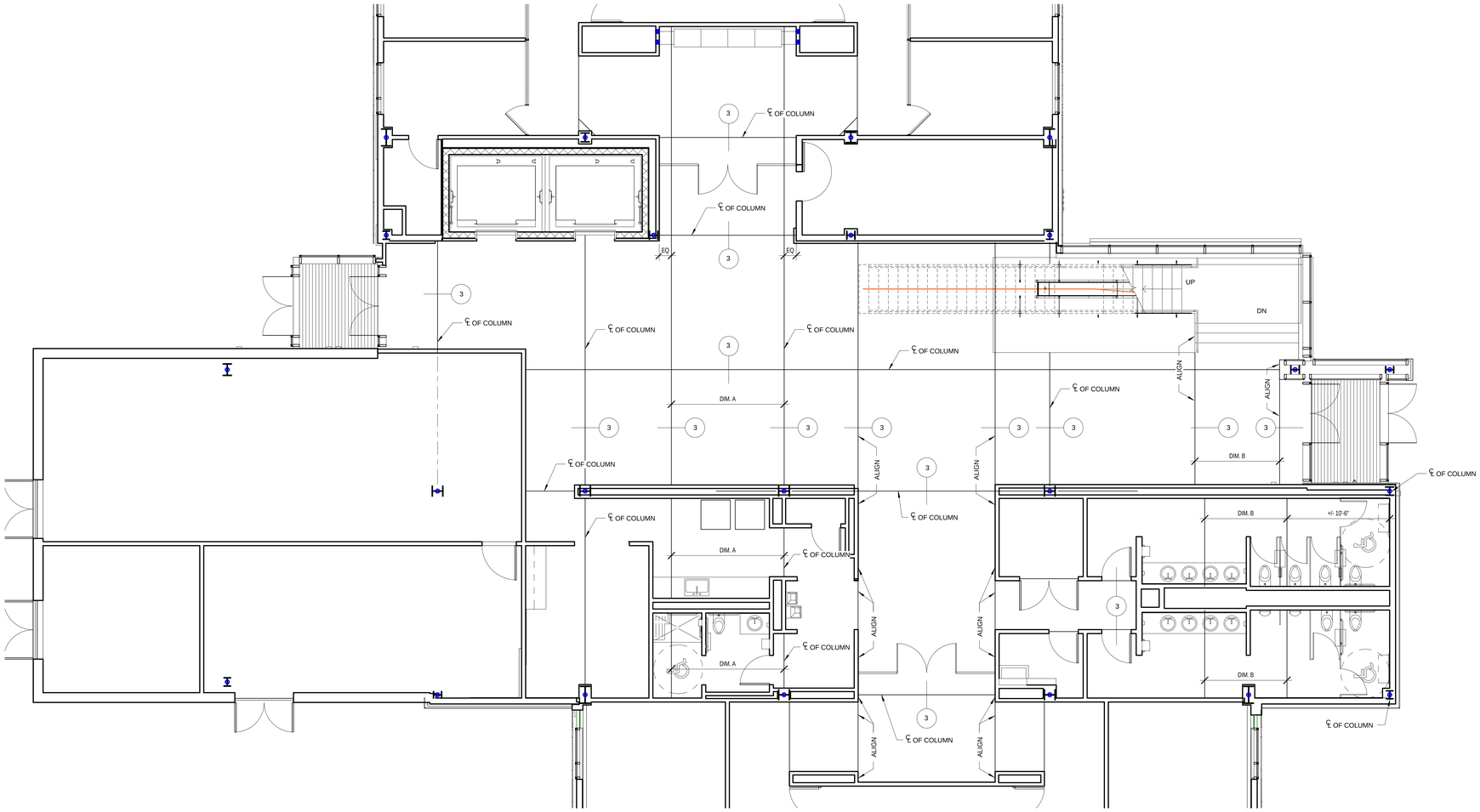

1 ENLARGED TERRAZZO FLOOR PLAN LOBBY LEVEL 1

A-921 REF. A-911b SCALE: 3/16" = 1'-0"

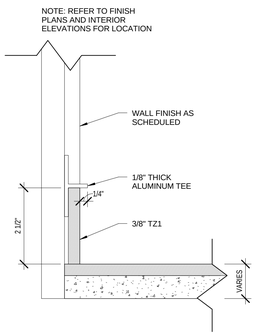

2 TYP. PRECAST TERRAZZO STRAIGHT BASE DETAIL

A-921 REF. SCALE: 6" = 1'-0"

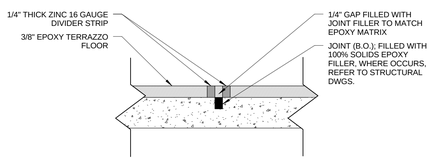

3 TYP. DETAIL SECTION THROUGH CONTROL JOINT

A-921 REF. SCALE: 6" = 1'-0"

100% SUBMITTAL

AECOM

AECOM TECHNICAL SERVICES, INC.
3101 WILSON BOULEVARD
SUITE 900
ARLINGTON, VA 22201

T: 703-682-4900 F: 703.682.4901
www.aecom.com

SEAL AREA

BOARD OF ARCHITECTS
EDWARD WARNER
101594
REGISTERED ARCHITECT
STATE OF MARYLAND

KEY PLAN

REV	DATE	DESCRIPTION	S&R BR.	CUSTOMER	PM	SECT. HEAD

	INITIALS	DATE
DRAWN BY	LA/NS	
CHECKED BY	BW/MW	
A-E MANAGER	EW	
ENVIRONMENTAL BRANCH	JH	
SAFETY BRANCH	CS	
CM	MMD	
PM	RWP	
CUSTOMER	JWB	
ENG. BRANCH	DGL	

ENLARGED TERRAZZO FLOOR PLAN LOBBY LEVEL 1

A-921

FLIGHT PROJECTS BUILDING

NATIONAL AERONAUTICS AND SPACE ADMINISTRATION

GODDARD SPACE FLIGHT CENTER GREENBELT, MARYLAND
FACILITIES MANAGEMENT DIVISION

DATE ISSUED	CoF CODE OR WR#	AECOM PROJECT NO.	SCALE
10/12/2012	12GXAZ	60187636	As indicated

FILE DATE: 10/11/2012 4:19:48 PM

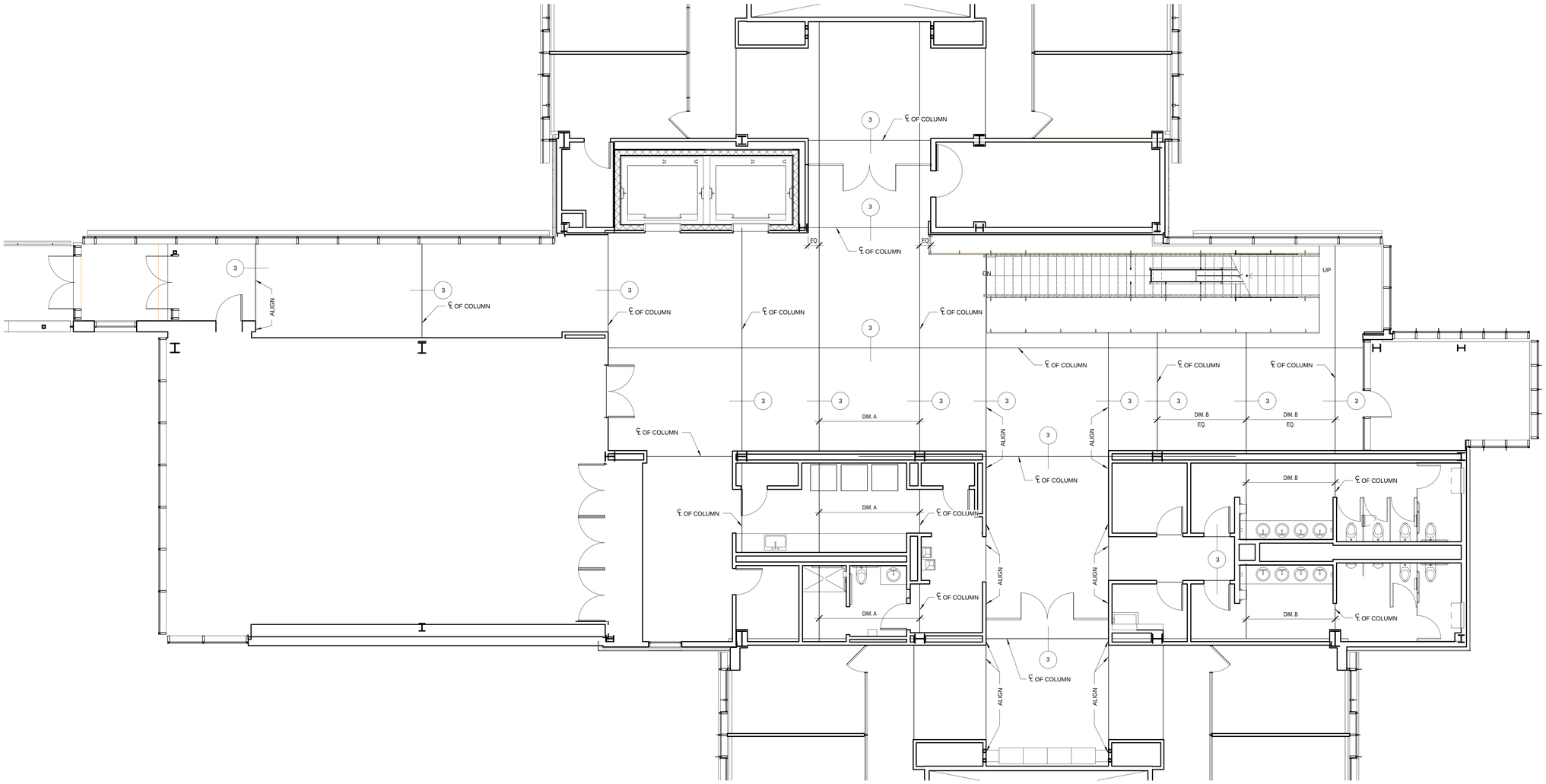

1 ENLARGED TERRAZZO FLOOR PLAN LOBBY LEVELS 2-4

A-922 REF. A-912b SCALE: 3/16" = 1'-0"

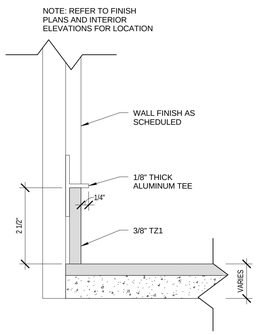

2 TYP. PRECAST TERRAZZO STRAIGHT BASE DETAIL

A-922 REF. SCALE: 6" = 1'-0"

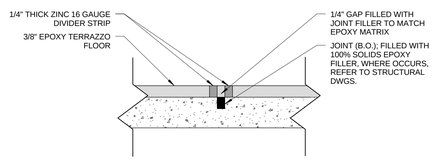

3 TYP. DETAIL SECTION THROUGH CONTROL JOINT

A-922 REF. SCALE: 6" = 1'-0"

100% SUBMITTAL

AECOM
AECOM TECHNICAL SERVICES, INC.
3101 WILSON BOULEVARD
SUITE 900
ARLINGTON, VA 22201
T: 703-682-4900 F: 703.682.4901
www.aecom.com

SEAL AREA

BOARD OF ARCHITECTS
ERNESTO WARNER
STATE OF MARYLAND

KEY PLAN

REV	DATE	DESCRIPTION	S&R BR.	CUSTOMER	PM	SECT. HEAD

	INITIALS	DATE
DRAWN BY	LA/NS	
CHECKED BY	BW/MW	
A-E MANAGER	EW	
ENVIRONMENTAL BRANCH	JH	
SAFETY BRANCH	CS	
CM	MMD	
PM	RWP	
CUSTOMER	JWB	
ENG. BRANCH	DGL	

ENLARGED TERRAZZO FLOOR PLAN LOBBY LEVELS 2-4

A-922

FLIGHT PROJECTS BUILDING

NATIONAL AERONAUTICS AND SPACE ADMINISTRATION
GODDARD SPACE FLIGHT CENTER GREENBELT, MARYLAND
FACILITIES MANAGEMENT DIVISION

ARCHITECTURE

DATE ISSUED	CoF CODE OR WR#	AECOM PROJECT NO.	SCALE
10/12/2012	12GXAZ	60187636	As indicated

FILE DATE: 10/11/2012 4:20:02 PM

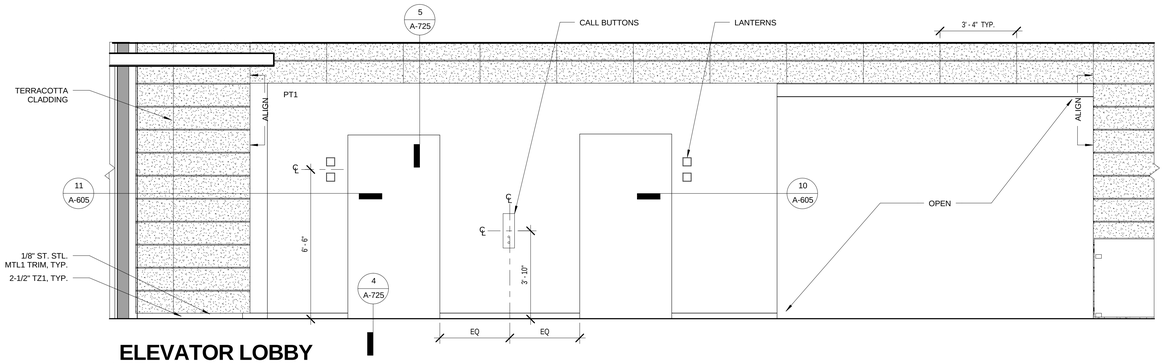

1 ELEVATOR LOBBY ELEVATION

A-931 REF. A-704 SCALE: 3/8" = 1'-0"

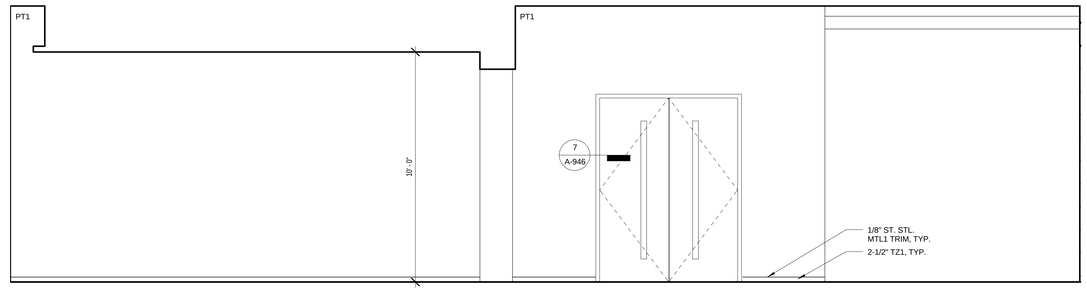

2 SYMPOSIUM ENTRANCE & SEATING AREA ELEVATION

A-931 REF. A-912b SCALE: 3/8" = 1'-0"

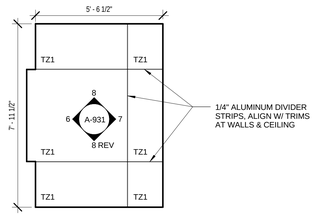

3 ELEVATOR CAB FLOOR FINISH PLAN

A-931 REF. A-301 SCALE: 3/8" = 1'-0"

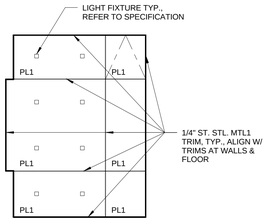

4 ELEVATOR CAB REFLECTED CEILING PLAN

A-931 REF. A-301 SCALE: 3/8" = 1'-0"

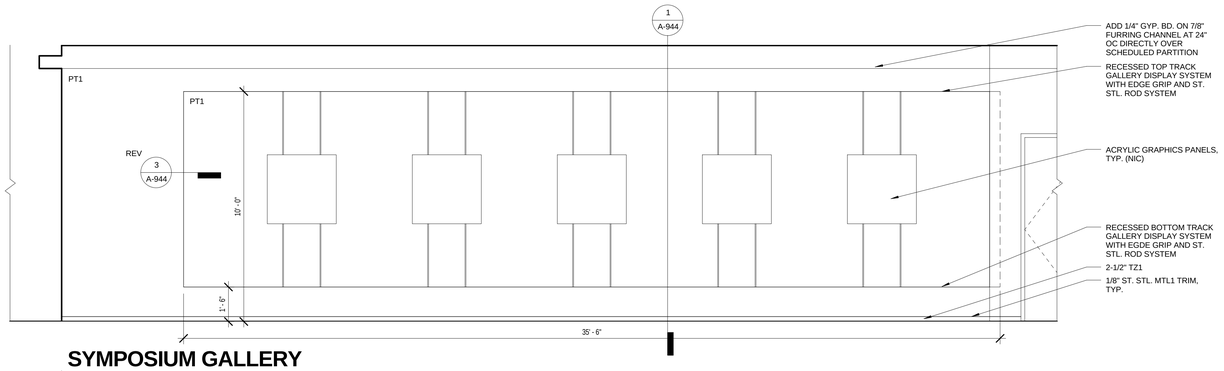

5 SYMPOSIUM GALLERY ELEVATION

A-931 REF. A-912b SCALE: 3/8" = 1'-0"

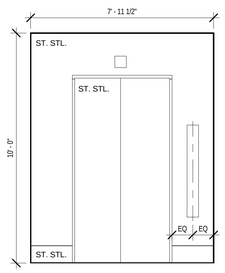

6 ELEVATOR CAB DOOR ELEVATION

A-931 REF. A-724 SCALE: 3/8" = 1'-0"

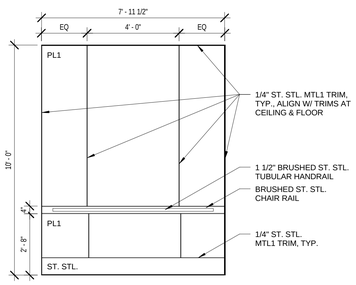

7 ELEVATOR CAB REAR ELEVATION

A-931 REF. A-724 SCALE: 3/8" = 1'-0"

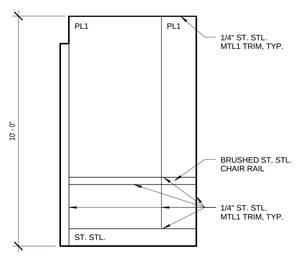

8 ELEVATOR CAB SIDE ELEVATION

A-931 REF. A-724 SCALE: 3/8" = 1'-0"

100% SUBMITTAL

AECOM
AECOM TECHNICAL SERVICES, INC.
3101 WILSON BOULEVARD
SUITE 900
ARLINGTON, VA 22201
T: 703-682-4900 F: 703.682.4901
www.aecom.com

SEAL AREA

BOARD OF ARCHITECTS 10084 BRUCE D. WILSON STATE OF MARYLAND

KEY PLAN

REV	DATE	DESCRIPTION	S&R BR.	CUSTOMER	PM	SECT. HEAD

	INITIALS	DATE
DRAWN BY	LA/NS	
CHECKED BY	BW/MW	
A-E MANAGER	EW	
ENVIRONMENTAL BRANCH	JH	
SAFETY BRANCH	CS	
CM	MMD	
PM	RWP	
CUSTOMER	JWB	
ENG. BRANCH	DGL	
ARCHITECTURE		

INTERIOR ELEVATIONS LOBBY & ELEVATOR CAB

A-931

FLIGHT PROJECTS BUILDING

NATIONAL AERONAUTICS AND SPACE ADMINISTRATION

GODDARD SPACE FLIGHT CENTER GREENBELT, MARYLAND
FACILITIES MANAGEMENT DIVISION

DATE ISSUED	CoF CODE OR WR#	AECOM PROJECT NO.	SCALE
10/12/2012	12GXAZ	60187636	3/8" = 1'-0"

FILE DATE: 10/11/2012 4:20:39 PM

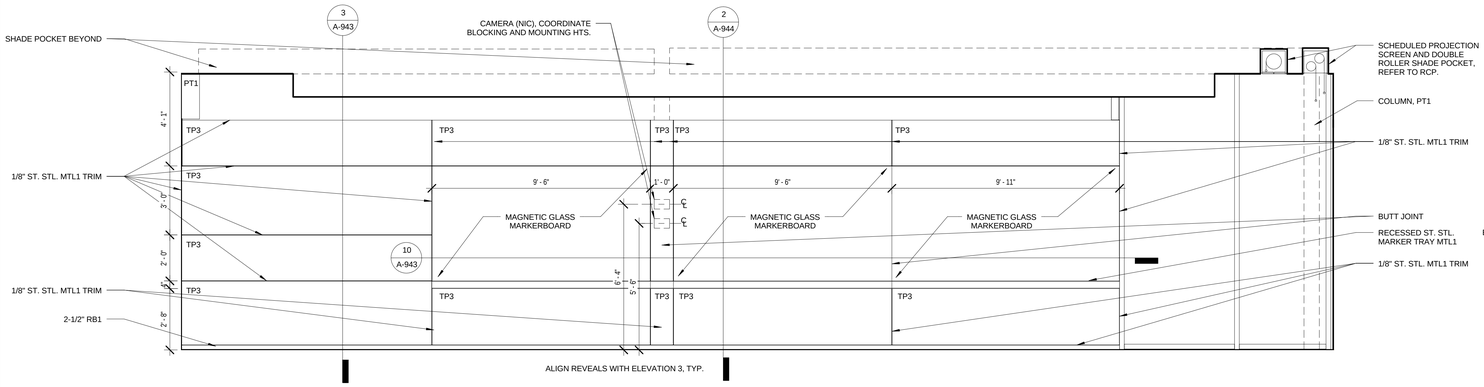

1 SYMPOSIUM ELEVATION

A-932 REF. A-912b SCALE: 3/8" = 1'-0"

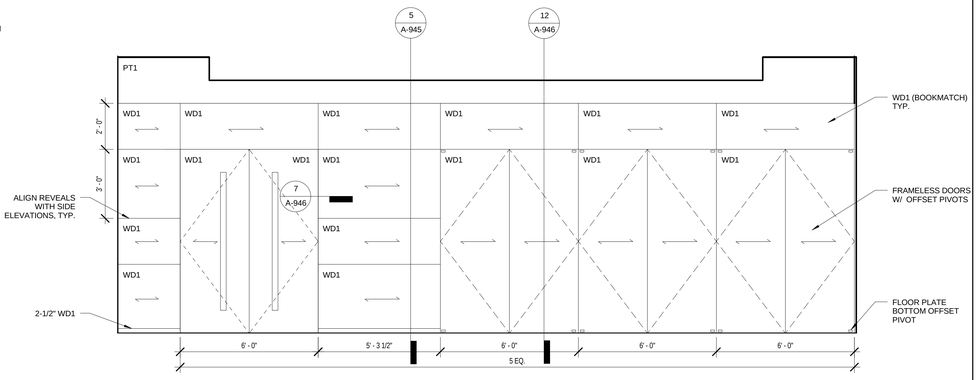

2 SYMPOSIUM ELEVATION

A-932 REF. A-912b SCALE: 3/8" = 1'-0"

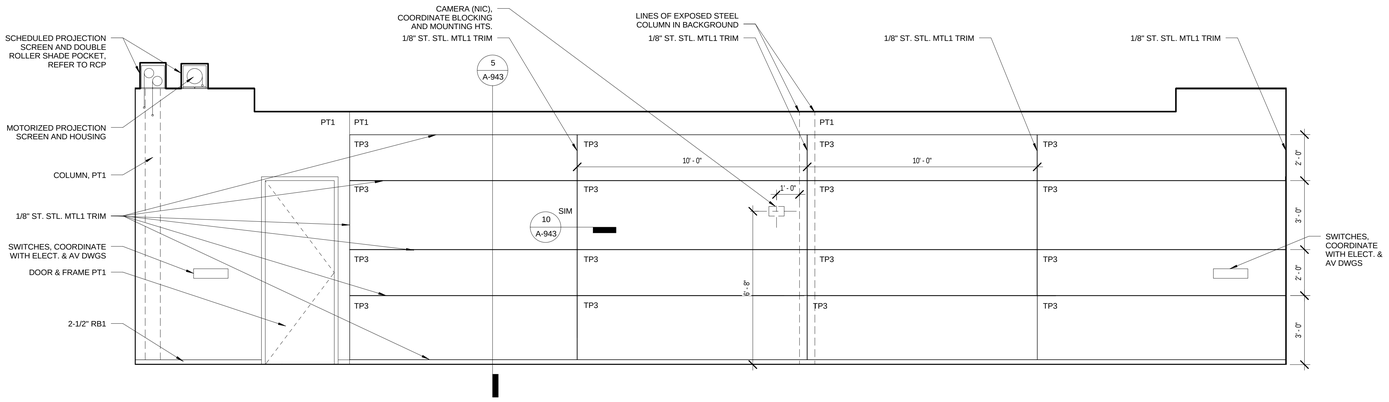

3 SYMPOSIUM ELEVATION

A-932 REF. A-912b SCALE: 3/8" = 1'-0"

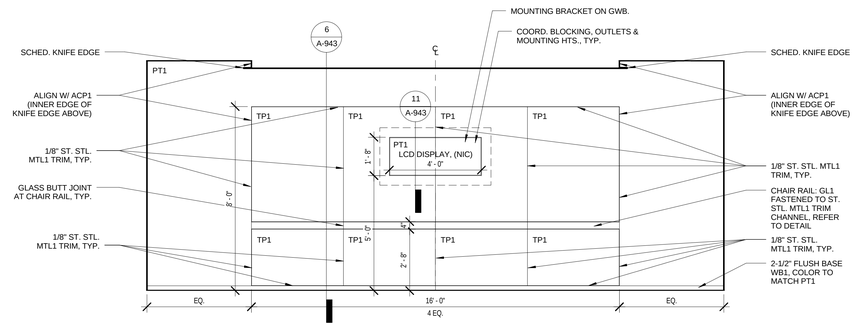

NOTE: SIMILAR ELEVATION FOR N207, N307, N407 WITHOUT LCD.

4 CONFERENCE ROOM BACK WALL ELEVATION (TYP)

A-932 REF. A-912a SCALE: 3/8" = 1'-0"

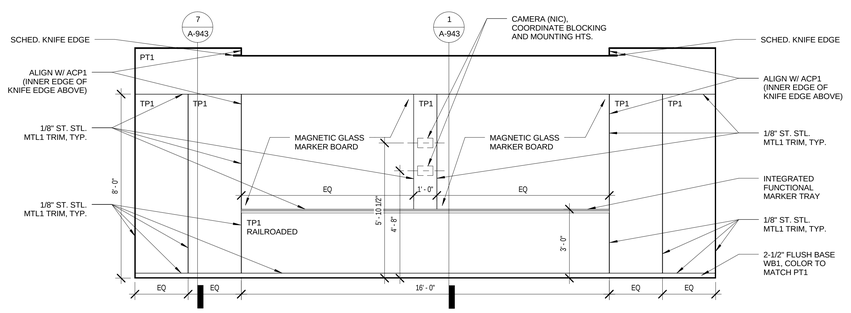

5 CONFERENCE ROOM FRONT WALL ELEVATION SOUTH WING (TYP)

A-932 REF. A-912b SCALE: 3/8" = 1'-0"

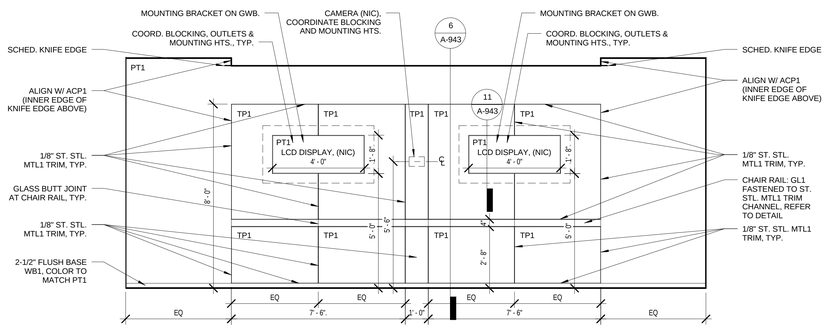

6 CONFERENCE ROOM FRONT WALL ELEVATION NORTH WING (TYP)

A-932 REF. A-912a SCALE: 3/8" = 1'-0"

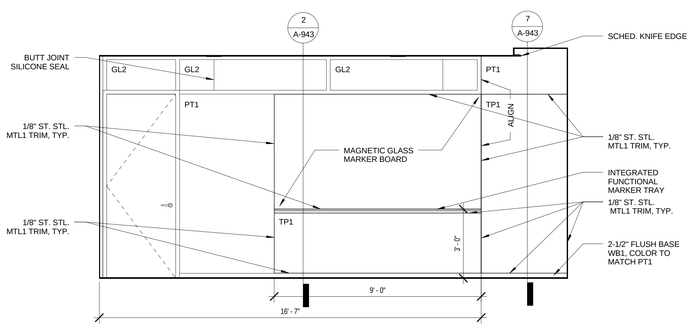

7 CONFERENCE ROOM SIDE WALL ELEVATION (TYP)

A-932 REF. A-912a SCALE: 3/8" = 1'-0"

100% SUBMITTAL

AECOM

AECOM TECHNICAL SERVICES, INC.
3101 WILSON BOULEVARD
SUITE 900
ARLINGTON, VA 22201

T: 703-682-4900 F: 703.682.4901
www.aecom.com

SEAL AREA

KEY PLAN

REV	DATE	DESCRIPTION	S&R BR.	CUSTOMER	PM	SECT. HEAD

	INITIALS	DATE
DRAWN BY	LA/NS	
CHECKED BY	BW/MW	
A-E MANAGER	EW	
ENVIRONMENTAL BRANCH	JH	
SAFETY BRANCH	CS	
CM	MMD	
PM	RWP	
CUSTOMER	JWB	
ENG. BRANCH	DGL	
ARCHITECTURE		

INTERIOR ELEVATIONS SYMPOSIUM & LARGE CONFERENCE ROOM

A-932

FLIGHT PROJECTS BUILDING

NATIONAL AERONAUTICS AND SPACE ADMINISTRATION

GODDARD SPACE FLIGHT CENTER GREENBELT, MARYLAND
FACILITIES MANAGEMENT DIVISION

DATE ISSUED	CoF CODE OR WR#	AECOM PROJECT NO.	SCALE
10/12/2012	12GXAZ	60187636	3/8" = 1'-0"

FILE DATE: 10/11/2012 4:20:53 PM

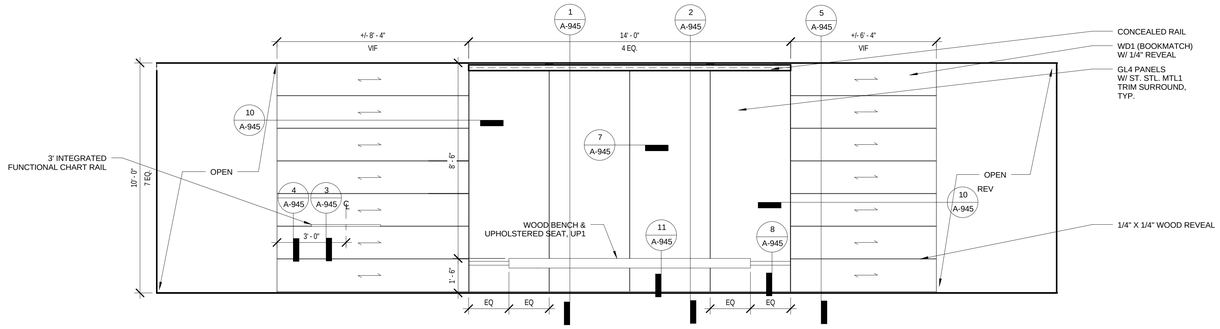

1 ENTRY ELEVATION (TYP)

A-933 REF. A-911b SCALE: 3/8" = 1'-0"

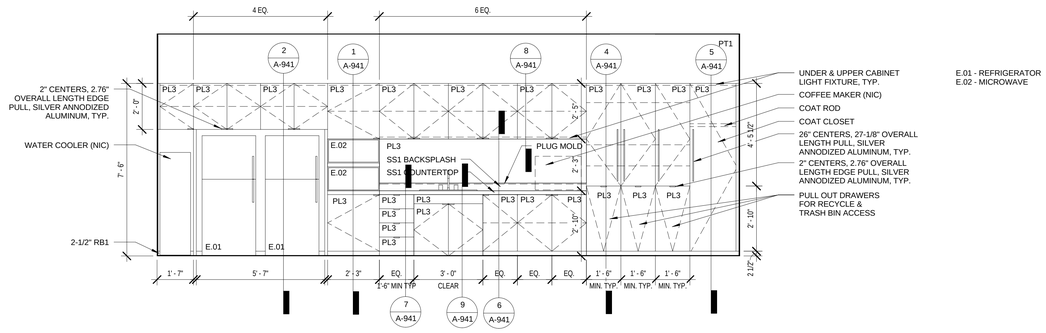

2 PANTRY AREA ELEVATION (TYP)

A-933 REF. A-911a SCALE: 3/8" = 1'-0"

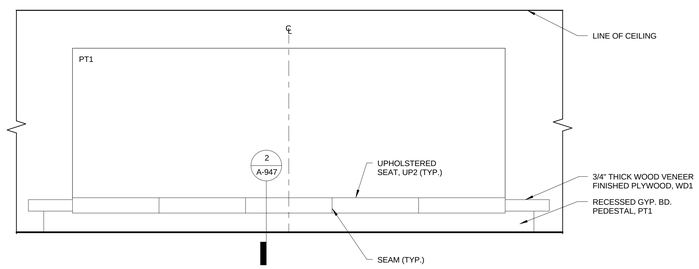

3 PANTRY BENCH ELEVATION (TYP)

A-933 REF. A-911a SCALE: 3/8" = 1'-0"

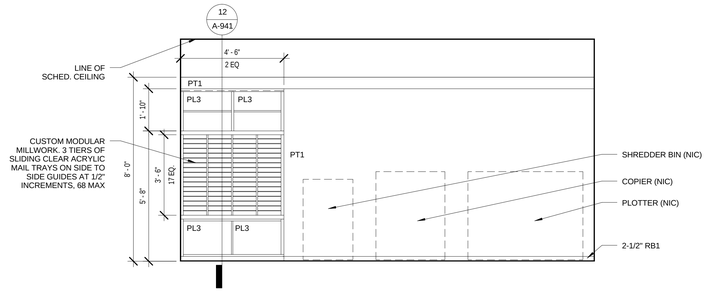

4 COPY / SUPPLY AREA ELEVATION (TYP)

A-933 REF. A-911a SCALE: 3/8" = 1'-0"

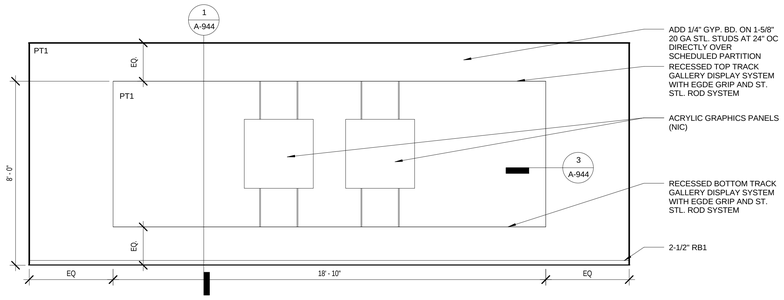

5 COPY / SUPPLY AREA ELEVATION (TYP)

A-933 REF. A-911a SCALE: 3/8" = 1'-0"

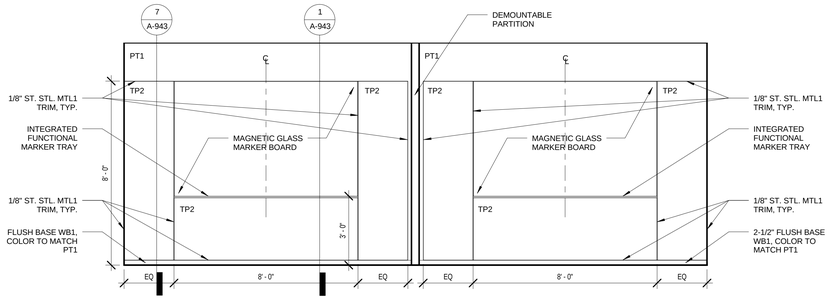

6 SMALL CONFERENCE ROOM ELEVATION (TYP)

A-933 REF. A-911b SCALE: 3/8" = 1'-0"

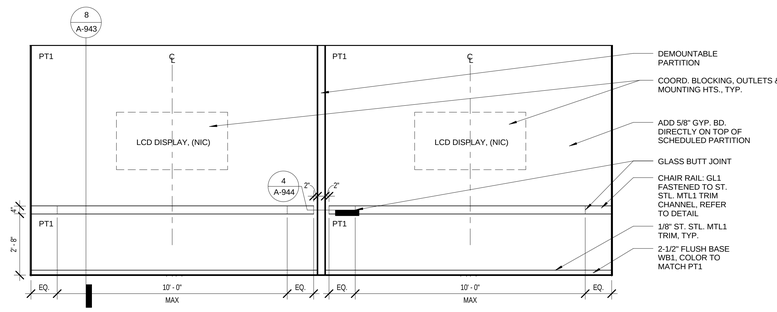

7 SMALL CONFERENCE ROOM ELEVATION (TYP)

A-933 REF. A-912a SCALE: 3/8" = 1'-0"

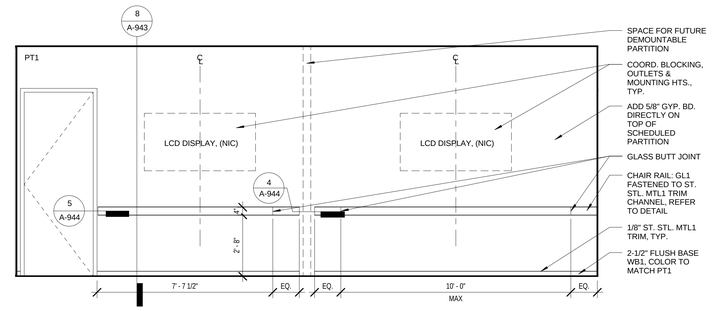

8 SMALL CONFERENCE ROOM ELEVATION 1ST FLOOR

A-933 REF. A-911b SCALE: 3/8" = 1'-0"

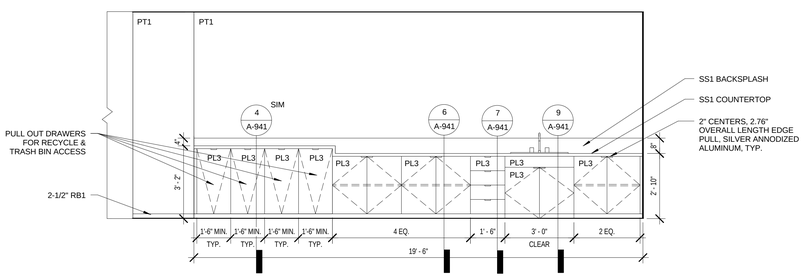

9 VENDING AREA ELEVATION (TYP)

A-933 REF. A-912b SCALE: 3/8" = 1'-0"

100% SUBMITTAL

AECOM
AECOM TECHNICAL SERVICES, INC.
3101 WILSON BOULEVARD
SUITE 900
ARLINGTON, VA 22201
T: 703-682-4900 F: 703.682.4901
www.aecom.com

SEAL AREA

KEY PLAN

REV	DATE	DESCRIPTION	S&R BR.	CUSTOMER	PM	SECT. HEAD

	INITIALS	DATE
DRAWN BY	LA/NS	
CHECKED BY	BW/MW	
A-E MANAGER	EW	
ENVIRONMENTAL BRANCH	JH	
SAFETY BRANCH	CS	
CM	MMD	
PM	RWP	
CUSTOMER	JWB	
ENG. BRANCH	DGL	
ARCHITECTURE		

INTERIOR ELEVATIONS TYP. SUITE

A-933

FLIGHT PROJECTS BUILDING

NATIONAL AERONAUTICS AND SPACE ADMINISTRATION

GODDARD SPACE FLIGHT CENTER GREENBELT, MARYLAND
FACILITIES MANAGEMENT DIVISION

DATE ISSUED	CoF CODE OR WR#	AECOM PROJECT NO.	SCALE
10/12/2012	12GXAZ	60187636	3/8" = 1'-0"

FILE DATE: 10/11/2012 4:22:03 PM

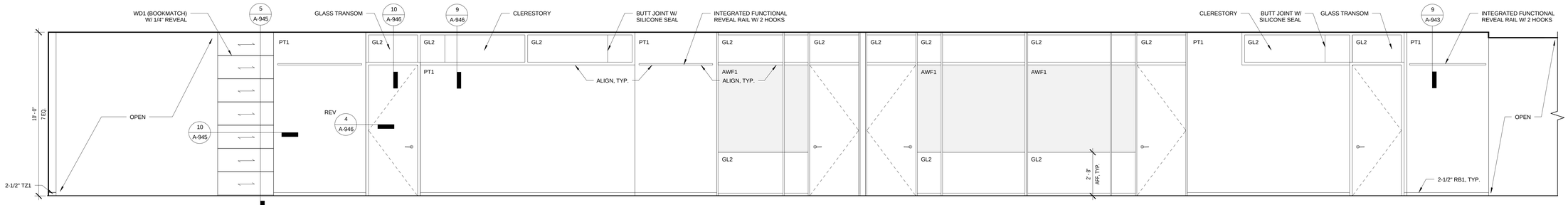

1 CIRCULATION ELEVATION

A-934 REF. A-911b SCALE: 3/8" = 1'-0"

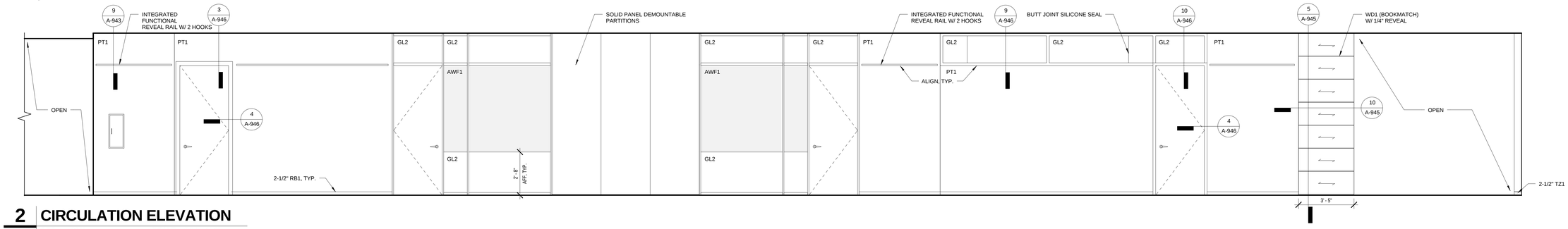

2 CIRCULATION ELEVATION

A-934 REF. A-911b SCALE: 3/8" = 1'-0"

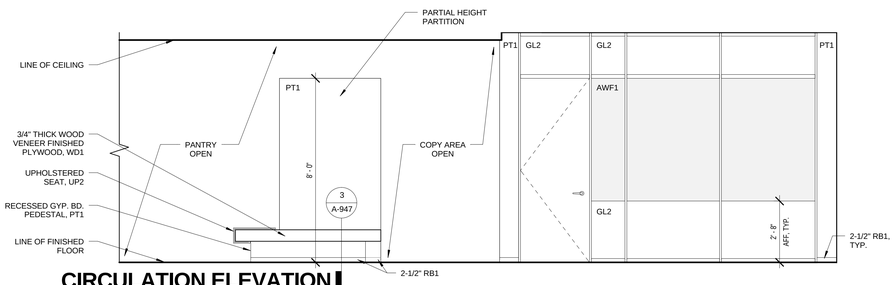

3 CIRCULATION ELEVATION (CONT.)

A-934 REF. A-911b SCALE: 3/8" = 1'-0"

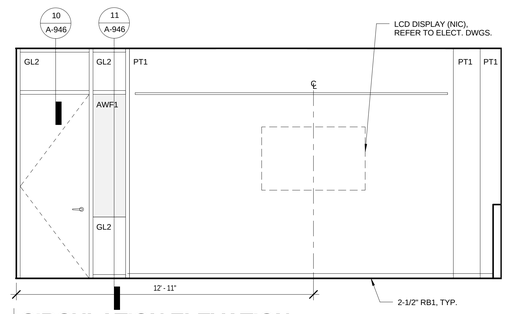

4 CIRCULATION ELEVATION

A-934 REF. A-912a SCALE: 3/8" = 1'-0"

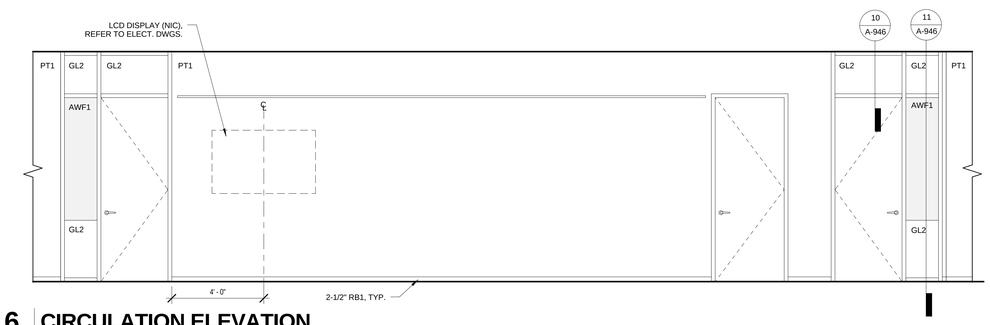

6 CIRCULATION ELEVATION

A-934 REF. A-911b SCALE: 3/8" = 1'-0"

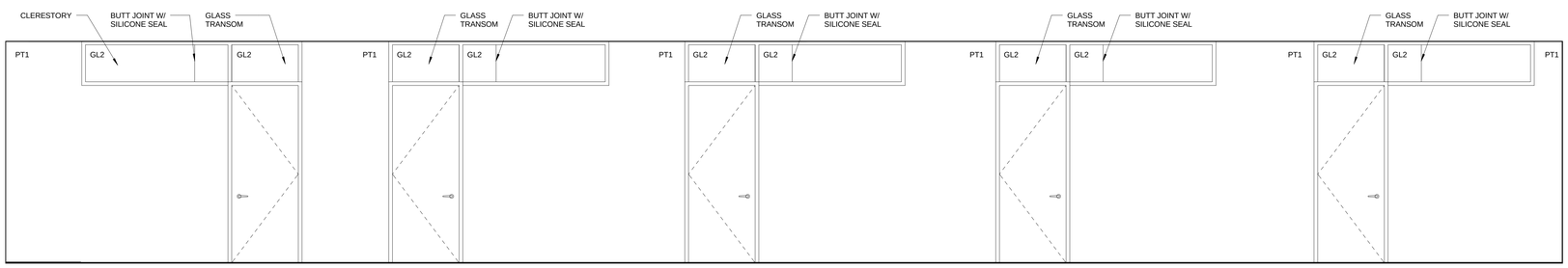

5 CIRCULATION ELEVATION

A-934 REF. A-912a SCALE: 3/8" = 1'-0"

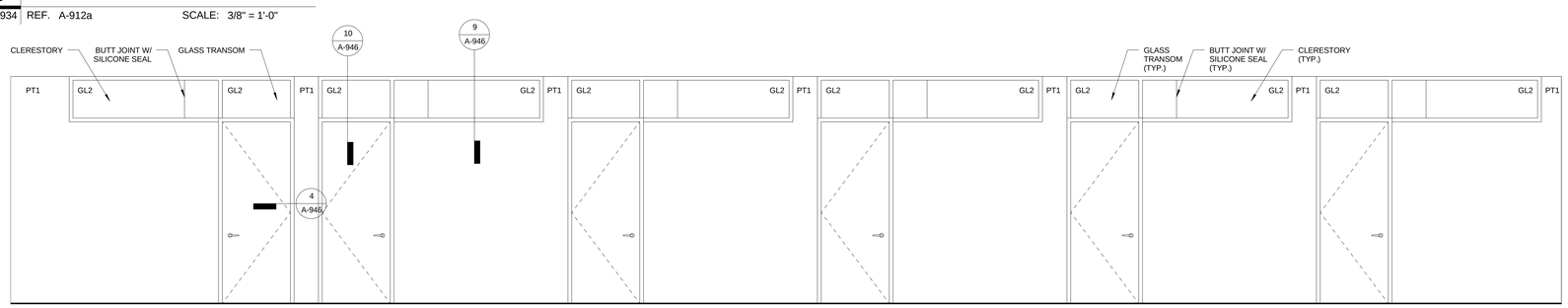

7 CIRCULATION ELEVATION - LEVEL 1 PRIVATE OFFICES

A-934 REF. A-911b SCALE: 3/8" = 1'-0"

100% SUBMITTAL

AECOM

AECOM TECHNICAL SERVICES, INC.
3101 WILSON BOULEVARD
SUITE 900
ARLINGTON, VA 22201

T: 703-682-4900 F: 703.682.4901
www.aecom.com

SEAL AREA

BOARD OF ARCHITECTS
ELIZABETH WARNER
REGISTERED ARCHITECT
STATE OF MARYLAND

KEY PLAN

REV	DATE	DESCRIPTION	S&R BR.	CUSTOMER	PM	SECT. HEAD

	INITIALS	DATE
DRAWN BY	LA/NS	
CHECKED BY	BW/MW	
A-E MANAGER	EW	
ENVIRONMENTAL BRANCH	JH	
SAFETY BRANCH	CS	
CM	MMD	
PM	RWP	
CUSTOMER	JWB	
ENG. BRANCH	DGL	

INTERIOR ELEVATIONS
TYP. SUITE CIRCULATION

A-934

FLIGHT PROJECTS BUILDING

NATIONAL AERONAUTICS AND SPACE ADMINISTRATION
GODDARD SPACE FLIGHT CENTER GREENBELT, MARYLAND
FACILITIES MANAGEMENT DIVISION

DATE ISSUED	CoF CODE OR WR#	AECOM PROJECT NO.	SCALE
10/12/2012	12GXAZ	60187636	3/8" = 1'-0"

FILE DATE: 10/11/2012 4:22:18 PM

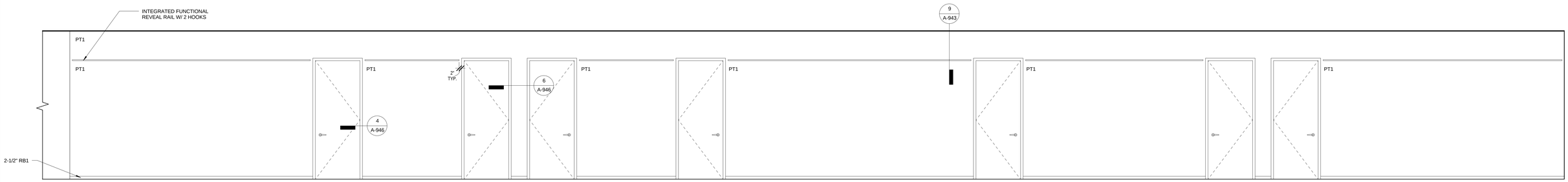

1 CODE 101 CIRCULATION ELEVATION

A-935 REF. A-821 SCALE: 3/8" = 1'-0"

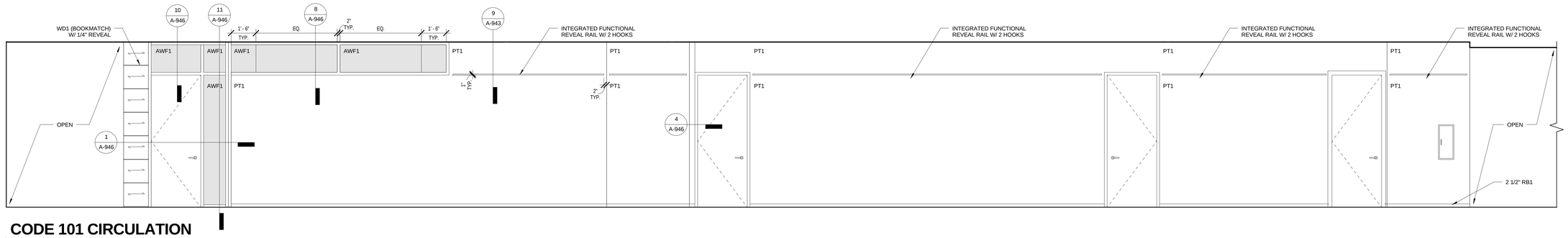

2 CODE 101 CIRCULATION ELEVATION

A-935 REF. A-821 SCALE: 3/8" = 1'-0"

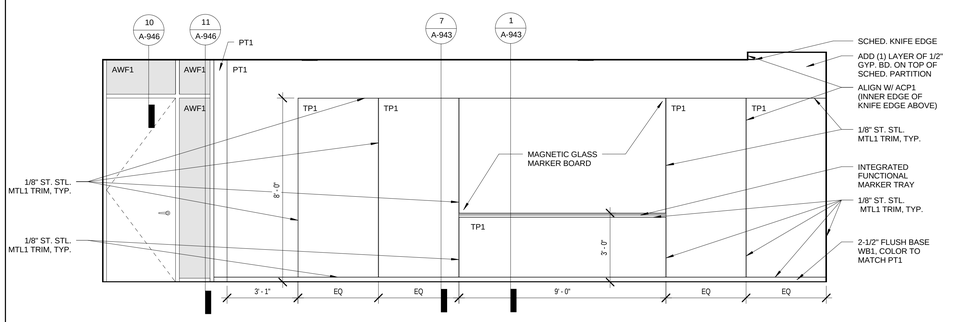

3 CODE 101 CONFERENCE ROOM SIDE ELEVATION

A-935 REF. A-911a SCALE: 3/8" = 1'-0"

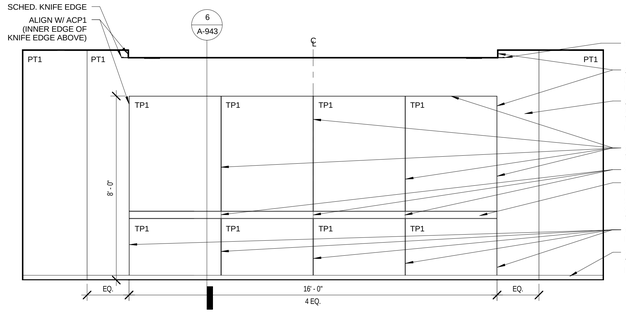

4 CODE 101 CONFERENCE ROOM BACK ELEVATION

A-935 REF. A-911a SCALE: 3/8" = 1'-0"

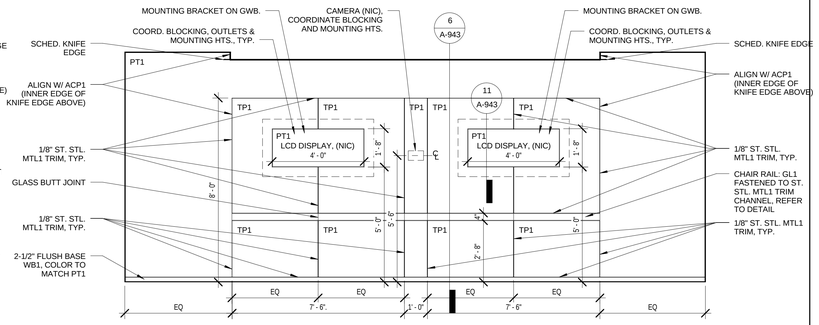

5 CODE 101 CONFERENCE ROOM FRONT ELEVATION

A-935 REF. A-911a SCALE: 3/8" = 1'-0"

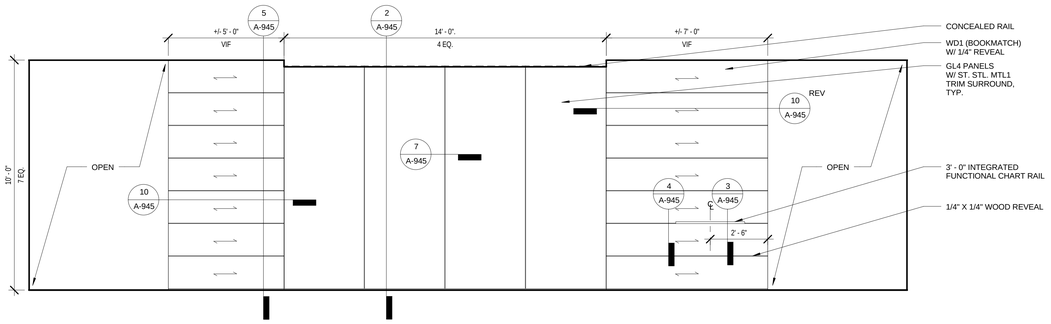

6 CODE 101 ENTRY ELEVATION

A-935 REF. A-911a SCALE: 3/8" = 1'-0"

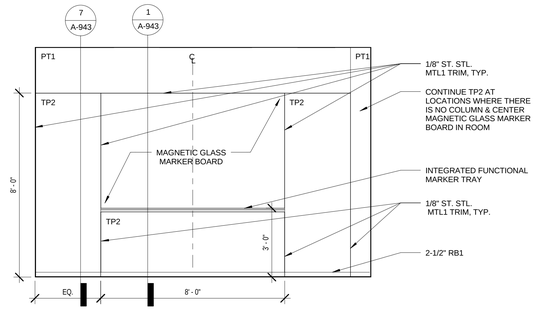

7 PLANNING ROOM ELEVATION

A-935 REF. A-911a SCALE: 3/8" = 1'-0"

100% SUBMITTAL

AECOM

AECOM TECHNICAL SERVICES, INC.
3101 WILSON BOULEVARD
SUITE 900
ARLINGTON, VA 22201

T: 703-682-4900 F: 703.682.4901
www.aecom.com

SEAL AREA

BOARD OF ARCHITECTS
ERIC W. WEAVER
REGISTERED ARCHITECT
STATE OF MARYLAND

KEY PLAN

REV	DATE	DESCRIPTION	S&R BR.	CUSTOMER	PM	SECT. HEAD

	INITIALS	DATE
DRAWN BY	LA/NS	
CHECKED BY	BW/MW	
A-E MANAGER	EW	
ENVIRONMENTAL BRANCH	JH	
SAFETY BRANCH	CS	
CM	MMD	
PM	RWP	
CUSTOMER	JWB	
ENG. BRANCH	DGL	
ARCHITECTURE		

INTERIOR ELEVATIONS
CODE 101

A-935

FLIGHT PROJECTS BUILDING

NATIONAL AERONAUTICS AND SPACE ADMINISTRATION

GODDARD SPACE FLIGHT CENTER GREENBELT, MARYLAND
FACILITIES MANAGEMENT DIVISION

DATE ISSUED	CoF CODE OR WR#	AECOM PROJECT NO.	SCALE
10/12/2012	12GXAZ	60187636	3/8" = 1'-0"

FILE DATE: 10/11/2012 4:22:31 PM

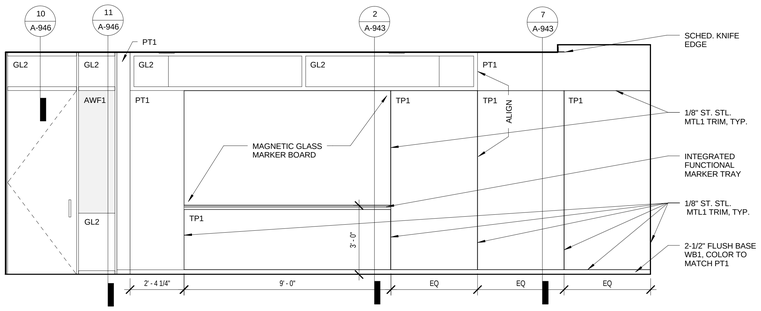

1 LEVEL 1 CONFERENCE ROOM SIDE ELEVATION

A-936 REF. A-911b SCALE: 3/8" = 1'-0"

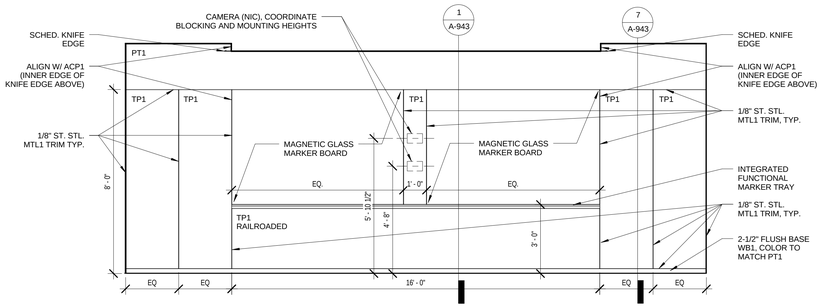

2 LEVEL 1 CONFERENCE ROOM FRONT ELEVATION

A-936 REF. A-911b SCALE: 3/8" = 1'-0"

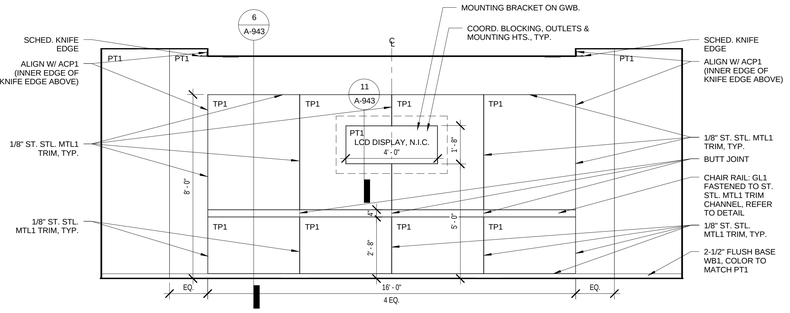

3 LEVEL 1 CONFERENCE ROOM BACK ELEVATION

A-936 REF. A-911b SCALE: 3/8" = 1'-0"

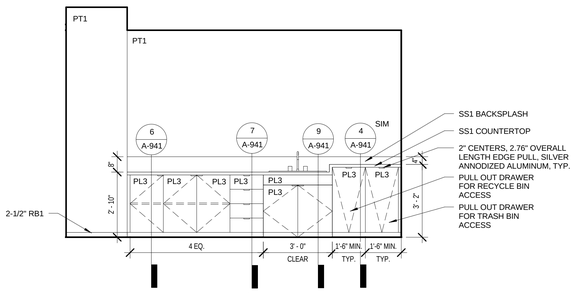

4 LEVEL 1 VENDING AREA ELEVATION

A-936 REF. A-821 SCALE: 3/8" = 1'-0"

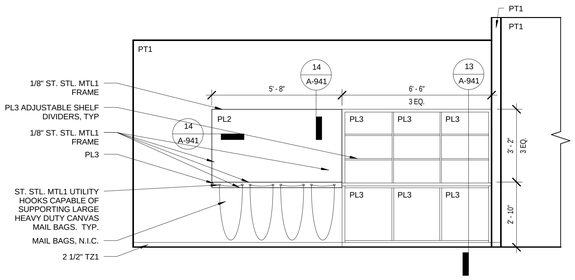

5 LEVEL 1 MAIL ROOM ELEVATION

A-936 REF. A-911b SCALE: 3/8" = 1'-0"

100% SUBMITTAL

AECOM
AECOM TECHNICAL SERVICES, INC.
3101 WILSON BOULEVARD
SUITE 900
ARLINGTON, VA 22201
T: 703-682-4900 F: 703.682.4901
www.aecom.com

SEAL AREA

KEY PLAN

REV	DATE	DESCRIPTION	S&R BR.	CUSTOMER	PM	SECT. HEAD

	INITIALS	DATE
DRAWN BY	LA/NS	
CHECKED BY	BW/MW	
A-E MANAGER	EW	
ENVIRONMENTAL BRANCH	JH	
SAFETY BRANCH	CS	
CM	MMD	
PM	RWP	
CUSTOMER	JWB	
ENG. BRANCH	DGL	
ARCHITECTURE		

INTERIOR ELEVATIONS LEVEL 1

A-936

FLIGHT PROJECTS BUILDING

NATIONAL AERONAUTICS AND SPACE ADMINISTRATION
GODDARD SPACE FLIGHT CENTER GREENBELT, MARYLAND
FACILITIES MANAGEMENT DIVISION

DATE ISSUED	CoF CODE OR WR#	AECOM PROJECT NO.	SCALE
10/12/2012	12GXAZ	60187636	3/8" = 1'-0"

FILE DATE: 10/11/2012 4:22:41 PM

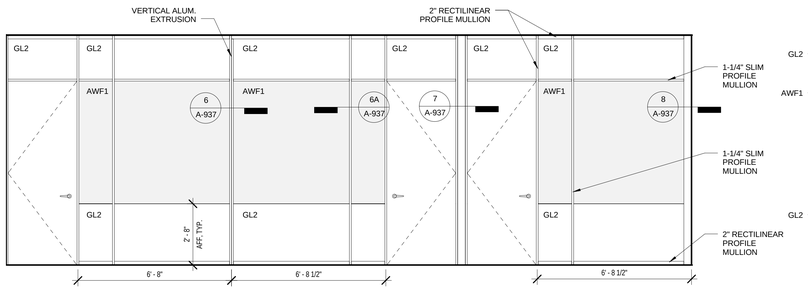

1 DEMOUNTABLE PARTITION OFFICE FRONT ELEVATION (TYP)

A-937 REF. A-911b SCALE: 3/8" = 1'-0"

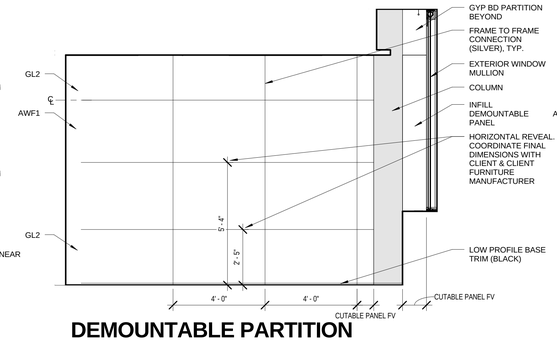

2 DEMOUNTABLE PARTITION ELEVATION W/ COLUMN (TYP)

A-937 REF. A-911b SCALE: 3/8" = 1'-0"

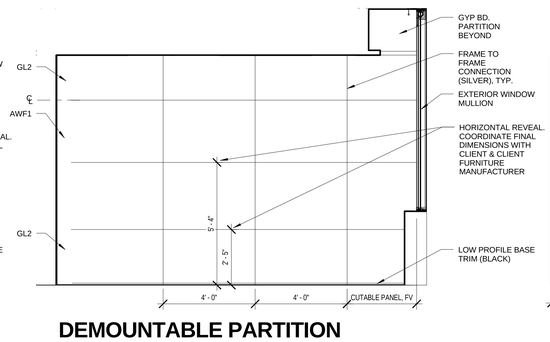

3 DEMOUNTABLE PARTITION ELEVATION W/OUT COLUMN (TYP)

A-937 REF. A-911b SCALE: 3/8" = 1'-0"

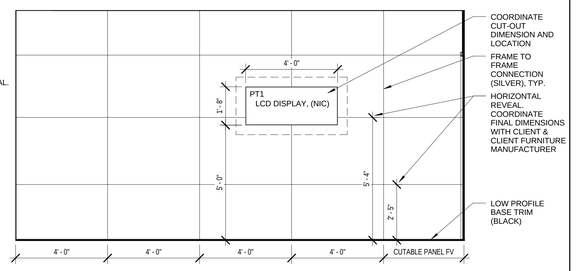

4 OFFICE W/ LCD ELEVATION (TYP)

A-937 REF. A-911b SCALE: 3/8" = 1'-0"

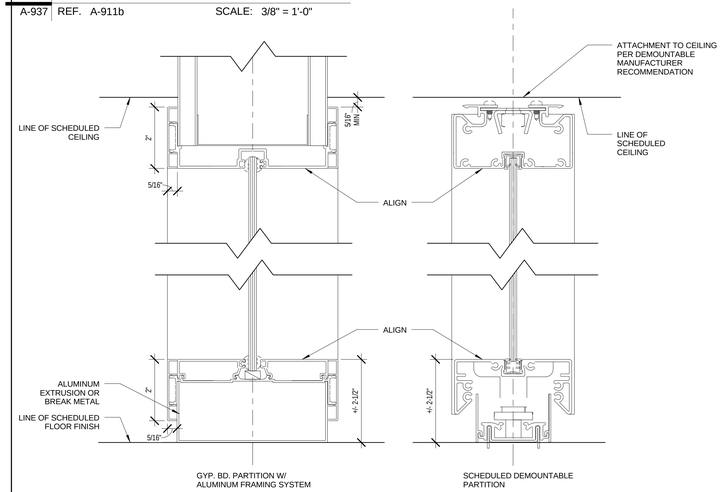

5 ALUMINUM GLAZING VS. DEMOUNTABLE PARTITIONS DESIGN CRITERIA

A-937 REF. SCALE: 6" = 1'-0"

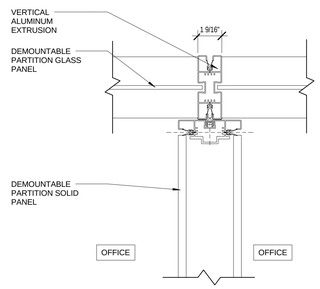

6 OFFICE DEMOUNTABLE PARTITION 3-WAY GLASS DETAIL, TYP.

A-937 REF. A-937 SCALE: 3" = 1'-0"

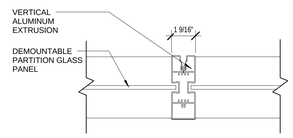

6A OFFICE DEMOUNTABLE PARTITION GLASS DETAIL, TYP.

A-937 REF. A-937 SCALE: 3" = 1'-0"

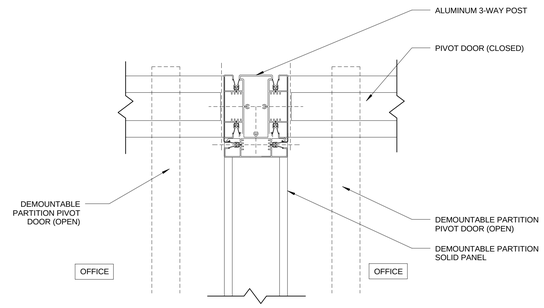

7 OFFICE DEMOUNTABLE PARTITION DOOR TO DOOR, TYP.

A-937 REF. A-937 SCALE: 3" = 1'-0"

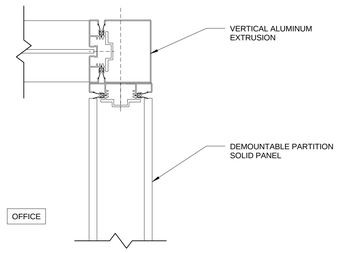

8 OFFICE DEMOUNTABLE PARTITION CORNER DETAIL, TYP.

A-937 REF. A-937 SCALE: 3" = 1'-0"

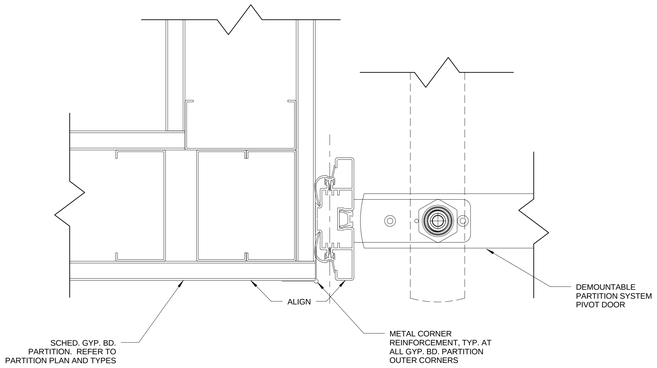

9 DETAIL - PLAN

A-937 REF. SCALE: 6" = 1'-0"

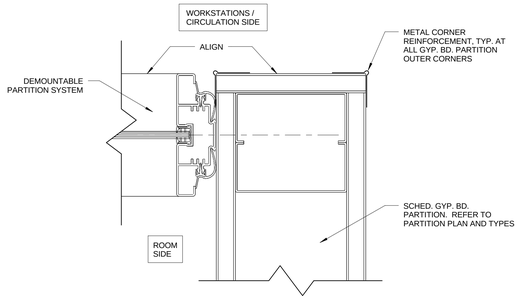

10 DETAIL - PLAN

A-937 REF. SCALE: 6" = 1'-0"

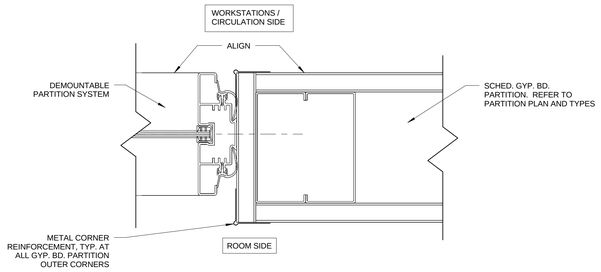

11 DETAIL - PLAN

A-937 REF. SCALE: 6" = 1'-0"

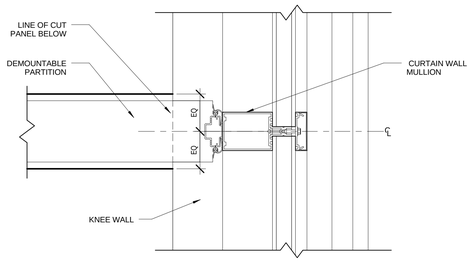

12 ENLARGED PLAN DEMOUNTABLE PARTITION & EXTERIOR WALL, TYP.

A-937 REF. A-102b SCALE: 3" = 1'-0"

100% SUBMITTAL

AECOM
AECOM TECHNICAL SERVICES, INC.
3101 WILSON BOULEVARD
SUITE 900
ARLINGTON, VA 22201
T: 703-682-4900 F: 703.682.4901
www.aecom.com

SEAL AREA

BOARD OF ARCHITECTS 10094 ENVIRONMENTAL DESIGN STATE OF MARYLAND

KEY PLAN

REV	DATE	DESCRIPTION	S&R BR.	CUSTOMER	PM	SECT. HEAD

	INITIALS	DATE
DRAWN BY	LA/NS	
CHECKED BY	BW/MW	
A-E MANAGER	EW	
ENVIRONMENTAL BRANCH	JH	
SAFETY BRANCH	CS	
CM	MMD	
PM	RWP	
CUSTOMER	JWB	
ENG. BRANCH	DGL	

ARCHITECTURE

INTERIOR ELEVATIONS & DETAILS DEMOUNTABLE PARTITIONS

A-937

FLIGHT PROJECTS BUILDING

NATIONAL AERONAUTICS AND SPACE ADMINISTRATION

GODDARD SPACE FLIGHT CENTER GREENBELT, MARYLAND
FACILITIES MANAGEMENT DIVISION

DATE ISSUED	CoF CODE OR WR#	AECOM PROJECT NO.	SCALE
10/12/2012	12GXAZ	60187636	As indicated

FILE DATE 10/11/2012 4:22:54 PM

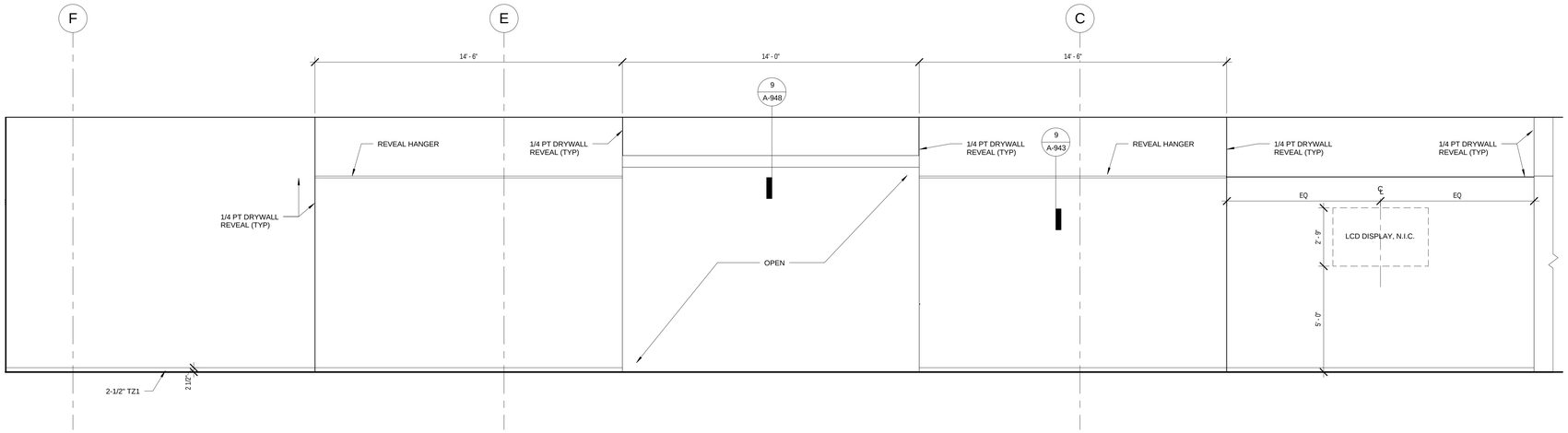

1 LOBBY DISPLAY ELEVATION

A-938 REF. A-911b SCALE: 3/8" = 1'-0"

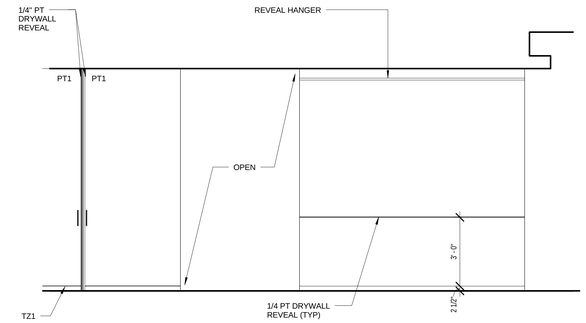

2 LOBBY DISPLAY SIDE ELEVATION

A-938 REF. A-911b SCALE: 3/8" = 1'-0"

100% SUBMITTAL

AECOM

AECOM TECHNICAL SERVICES, INC.
3101 WILSON BOULEVARD
SUITE 900
ARLINGTON, VA 22201

T: 703-682-4900 F: 703.682.4901
www.aecom.com

SEAL AREA

BOARD OF ARCHITECTS
EDWARD J. WEISS
STATE OF MARYLAND

KEY PLAN

REV	DATE	DESCRIPTION	S&R BR.	CUSTOMER	PM	SECT. HEAD

	INITIALS	DATE
DRAWN BY	LA/NS	
CHECKED BY	BW/MW	
A-E MANAGER	EW	
ENVIRONMENTAL BRANCH	JH	
SAFETY BRANCH	CS	
CM	MMD	
PM	RWP	
CUSTOMER	JWB	
ENG. BRANCH	DGL	

INTERIOR ELEVATIONS
LOBBY DISPLAY CASE

A-938

FLIGHT PROJECTS BUILDING

NATIONAL AERONAUTICS AND SPACE ADMINISTRATION
GODDARD SPACE FLIGHT CENTER GREENBELT, MARYLAND
FACILITIES MANAGEMENT DIVISION

DATE ISSUED	CoF CODE OR WR#	AECOM PROJECT NO.	SCALE
10/12/2012	12GXAZ	60187636	3/8" = 1'-0"

FILE DATE: 10/11/2012 4:23:04 PM

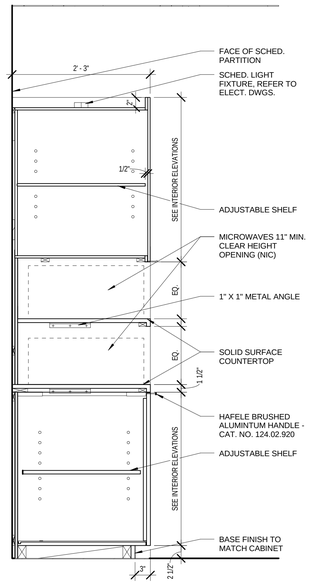

1 PANTRY MICROWAVE CABINET SECTION

A-941 REF. A-933 SCALE: 1" = 1'-0"

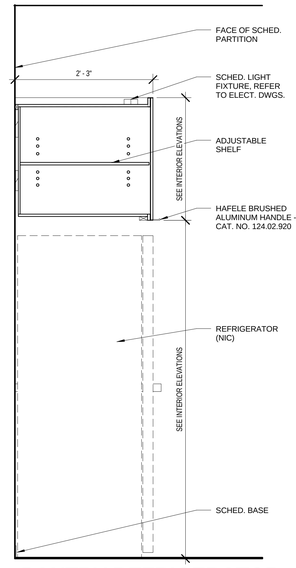

2 PANTRY REFRIGERATOR AND UPPER CABINET SECTION

A-941 REF. A-933 SCALE: 1" = 1'-0"

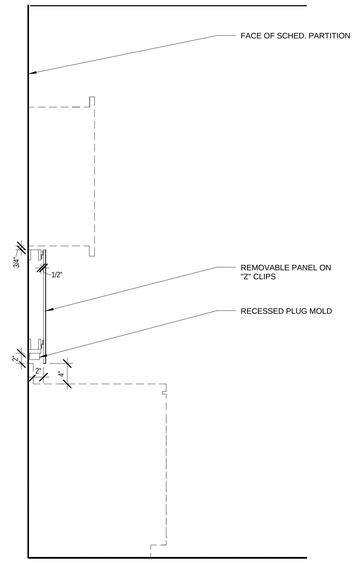

3 PANTRY PLUG MOLD SECTION

A-941 REF. SCALE: 1" = 1'-0"

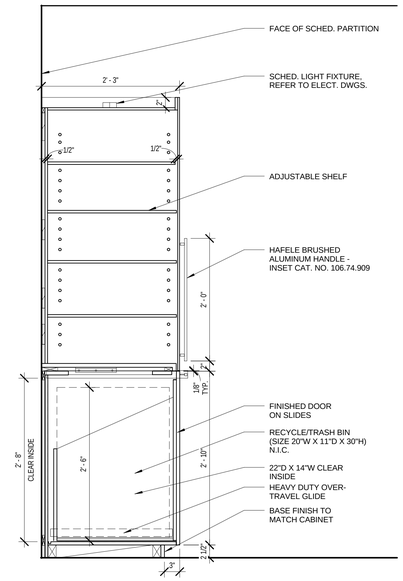

4 RECYCLE / TRASH BIN SECTION

A-941 REF. A-933 SCALE: 1" = 1'-0"

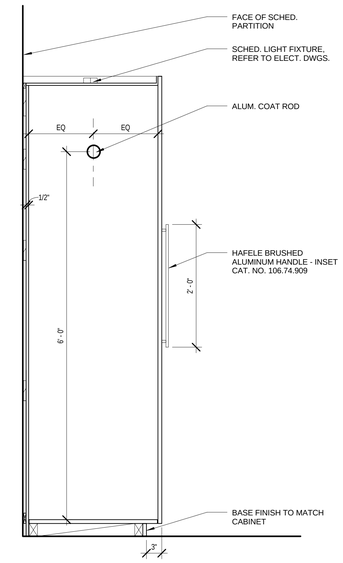

5 PANTRY FULL HEIGHT COAT CLOSET SECTION

A-941 REF. A-933 SCALE: 1" = 1'-0"

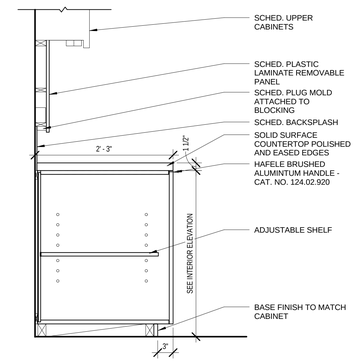

6 PANTRY LOWER CABINET SECTION

A-941 REF. A-933 SCALE: 1" = 1'-0"

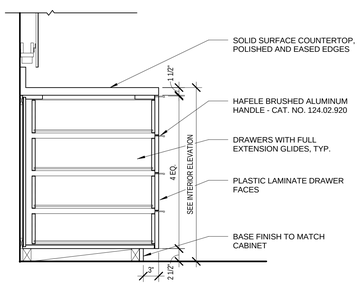

7 PANTRY LOWER CABINET WITH DRAWERS SECTION

A-941 REF. A-933 SCALE: 1" = 1'-0"

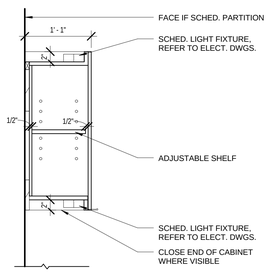

8 PANTRY UPPER CABINET SECTION

A-941 REF. A-933 SCALE: 1" = 1'-0"

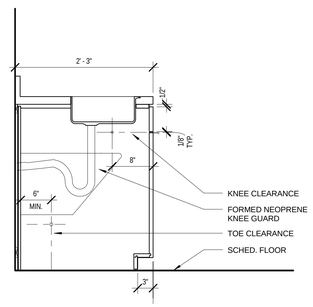

9 PANTRY SINK SECTION

A-941 REF. A-933 SCALE: 1" = 1'-0"

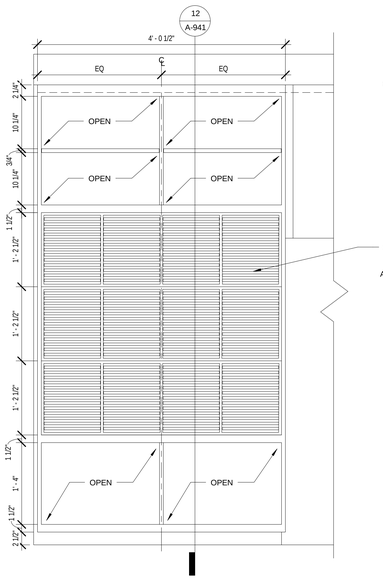

11 MAIL SORTING CABINET ELEVATION

A-941 REF. SCALE: 1" = 1'-0"

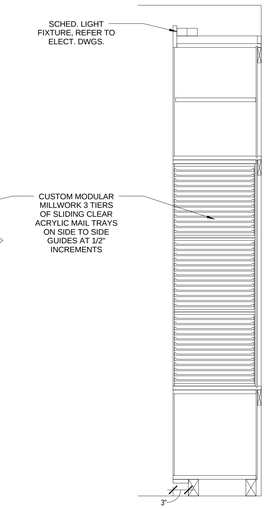

12 MAIL SORTING CABINET SECTION

A-941 REF. A-933 SCALE: 1" = 1'-0"

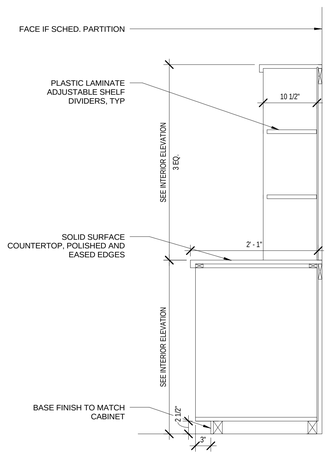

13 MAIL ROOM CABINET SECTION

A-941 REF. A-936 SCALE: 1" = 1'-0"

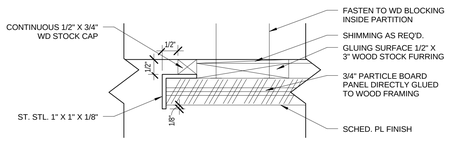

14 STAINLESS STEEL ANGLE

A-941 REF. A-936 SCALE: 6" = 1'-0"

100% SUBMITTAL

AECOM

AECOM TECHNICAL SERVICES, INC.
3101 WILSON BOULEVARD
SUITE 900
ARLINGTON, VA 22201

T: 703-682-4900 F: 703.682.4901
www.aecom.com

SEAL AREA

BOARD OF ARCHITECTURE 10084 REGISTERED ARCHITECT STATE OF MARYLAND

KEY PLAN

REV	DATE	DESCRIPTION	S&R BR.	CUSTOMER	PM	SECT. HEAD

	INITIALS	DATE
DRAWN BY	LA/NS	
CHECKED BY	BW/MW	
A-E MANAGER	EW	
ENVIRONMENTAL BRANCH	JH	
SAFETY BRANCH	CS	
CM	MMD	
PM	RWP	
CUSTOMER	JWB	
ENG. BRANCH	DGL	
ARCHITECTURE		

INTERIOR DETAILS MILLWORK

A-941

FLIGHT PROJECTS BUILDING

NATIONAL AERONAUTICS AND SPACE ADMINISTRATION

GODDARD SPACE FLIGHT CENTER GREENBELT, MARYLAND
FACILITIES MANAGEMENT DIVISION

DATE ISSUED	CoF CODE OR WR#	AECOM PROJECT NO.	SCALE
10/12/2012	12GXAZ	60187636	As indicated

FILE DATE: 10/11/2012 4:23:14 PM

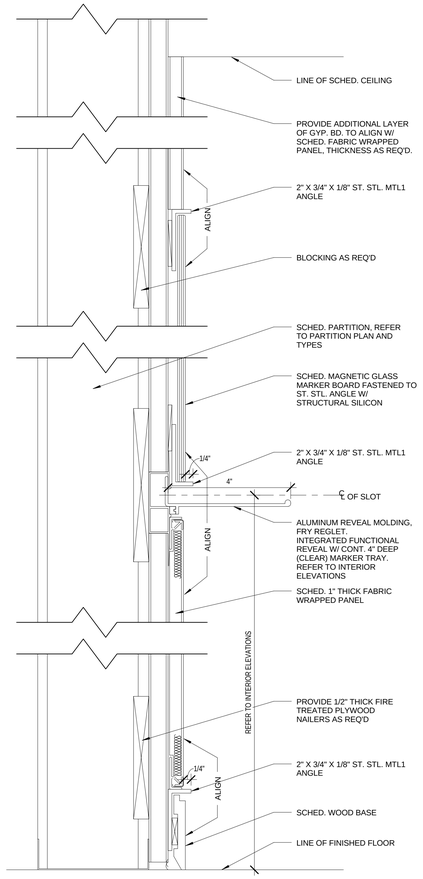

1 RECESSED MARKER TRAY SECTION

A-943 REF. A-932 SCALE: 6" = 1'-0"

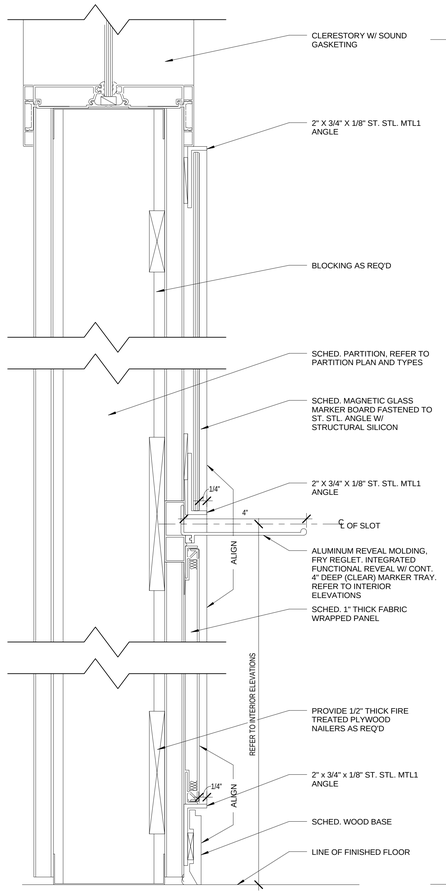

2 RECESSED MARKER TRAY SECTION

A-943 REF. A-932 SCALE: 6" = 1'-0"

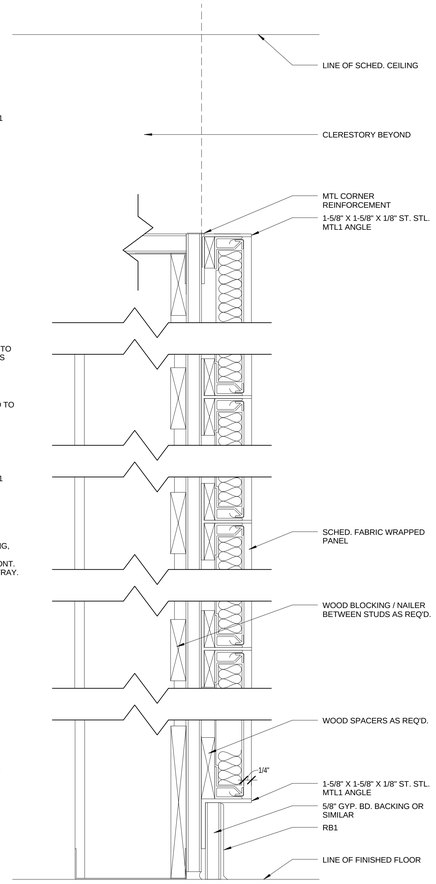

3 SYMPOSIUM FABRIC WRAPPED PANEL SECTION

A-943 REF. A-932 SCALE: 6" = 1'-0"

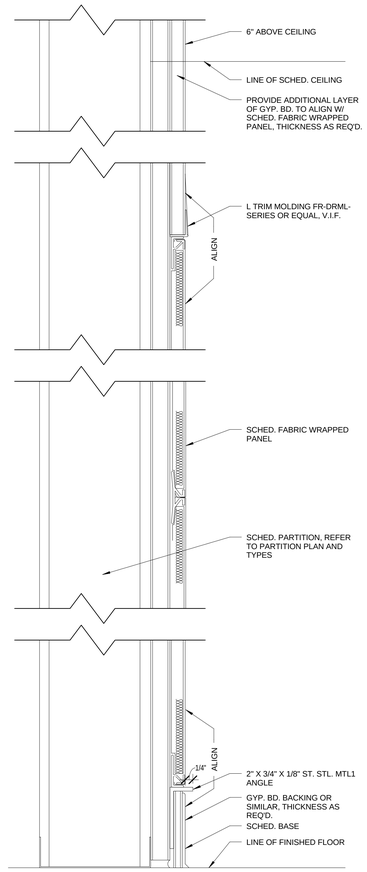

5 FABRIC WRAPPED PANEL SECTION

A-943 REF. A-932 SCALE: 6" = 1'-0"

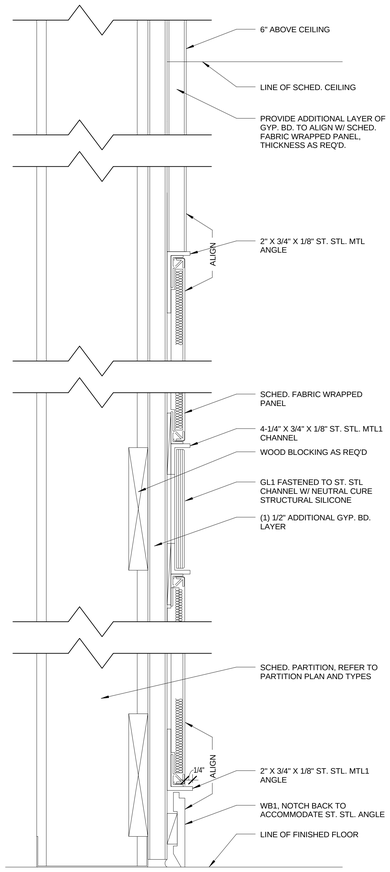

6 GLASS CHAIR RAIL SECTION

A-943 REF. A-932 SCALE: 6" = 1'-0"

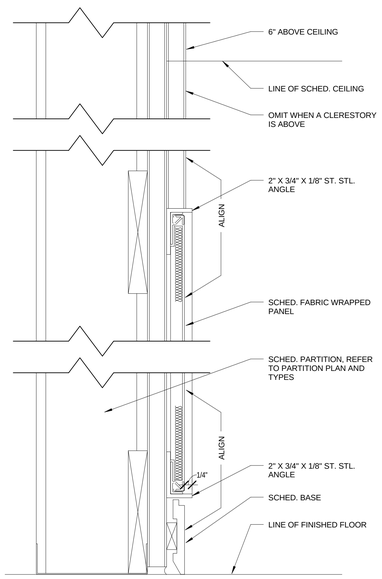

7 FABRIC WRAPPED PANEL SECTION

A-943 REF. A-932 SCALE: 6" = 1'-0"

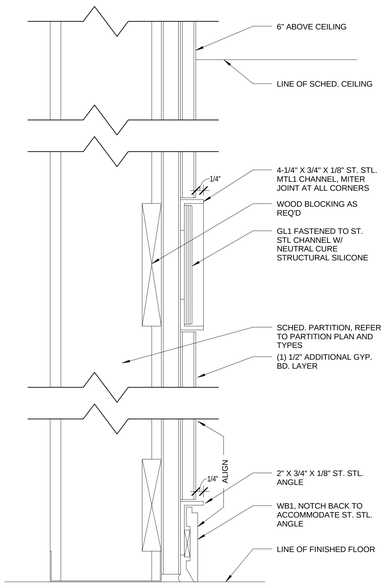

8 GLASS CHAIR RAIL SECTION

A-943 REF. A-933 SCALE: 6" = 1'-0"

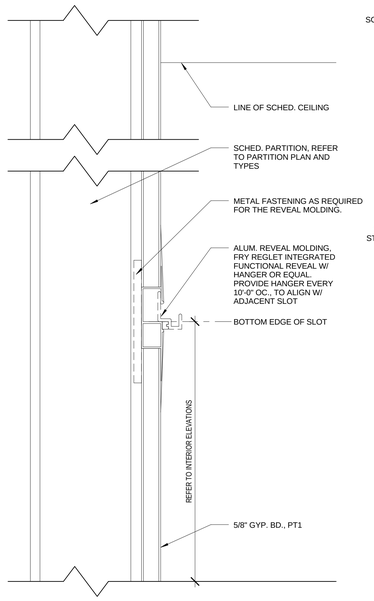

9 REVEAL W/ HANGER SECTION

A-943 REF. A-934 SCALE: 6" = 1'-0"

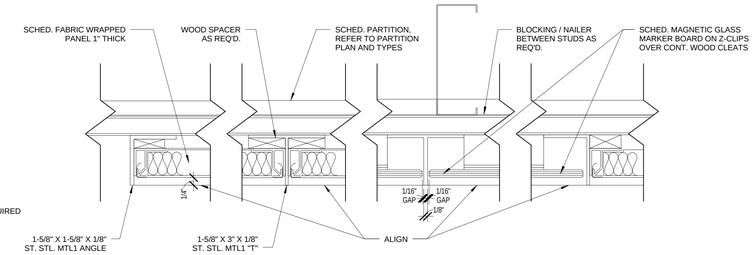

10 DETAIL - PLAN

A-943 REF. A-932 SCALE: 6" = 1'-0"

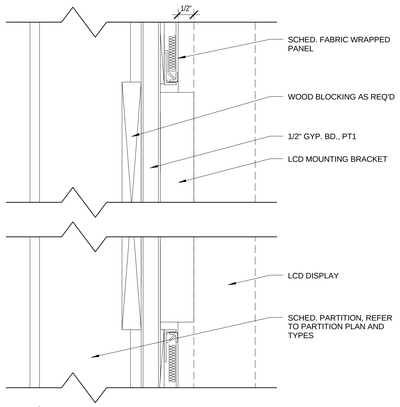

11 LCD DISPLAY SECTION

A-943 REF. A-932 SCALE: 6" = 1'-0"

100% SUBMITTAL

AECOM

AECOM TECHNICAL SERVICES, INC.
3101 WILSON BOULEVARD
SUITE 900
ARLINGTON, VA 22201

T: 703-682-4900 F: 703.682.4901
www.aecom.com

SEAL AREA

BOARD OF ARCHITECTS
ERIC W. WARNER
101594
REGISTERED ARCHITECT
STATE OF MARYLAND

KEY PLAN

REV	DATE	DESCRIPTION	S&R BR.	CUSTOMER	PM	SECT. HEAD

	INITIALS	DATE
DRAWN BY	LA/NS	
CHECKED BY	BW/MW	
A-E MANAGER	EW	
ENVIRONMENTAL BRANCH	JH	
SAFETY BRANCH	CS	
CM	MMD	
PM	RWP	
CUSTOMER	JWB	
ENG. BRANCH	DGL	
ARCHITECTURE		

INTERIOR DETAILS
INTERIOR WALL SECTIONS

A-943

FLIGHT PROJECTS BUILDING

NATIONAL AERONAUTICS AND SPACE ADMINISTRATION
GODDARD SPACE FLIGHT CENTER GREENBELT, MARYLAND
FACILITIES MANAGEMENT DIVISION

DATE ISSUED	CoF CODE OR WR#	AECOM PROJECT NO.	SCALE
10/12/2012	12GXAZ	60187636	6" = 1'-0"

FILE DATE: 10/11/2012 4:23:25 PM

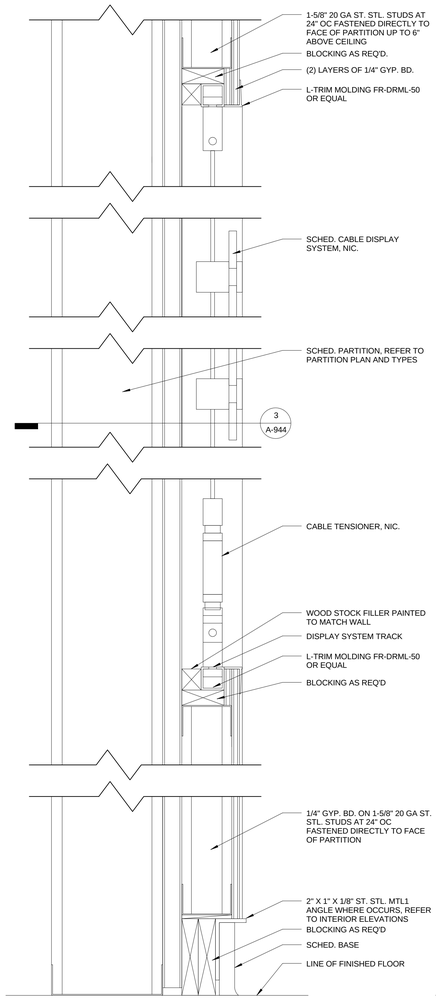

1 PANEL DISPLAY SYSTEM SECTION

A-944 REF. A-931 SCALE: 6" = 1'-0"

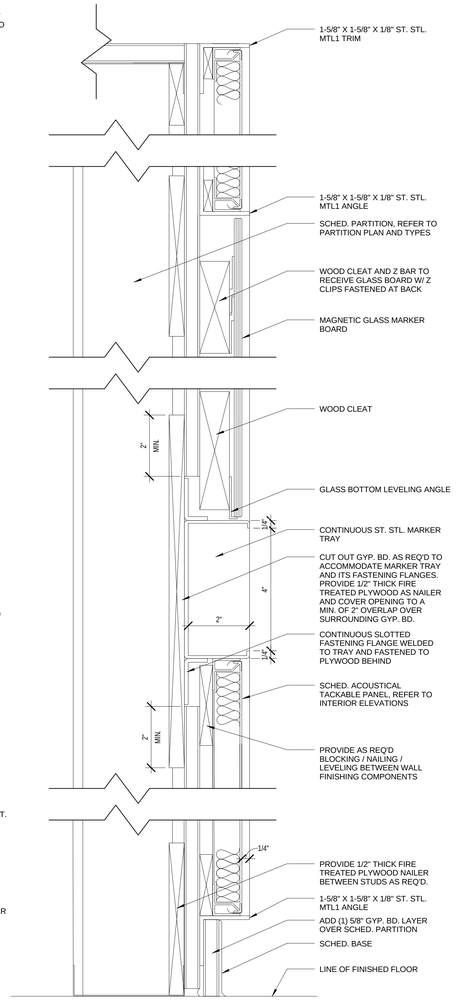

2 SYMPOSIUM RECESSED MARKER TRAY SECTION

A-944 REF. A-932 SCALE: 6" = 1'-0"

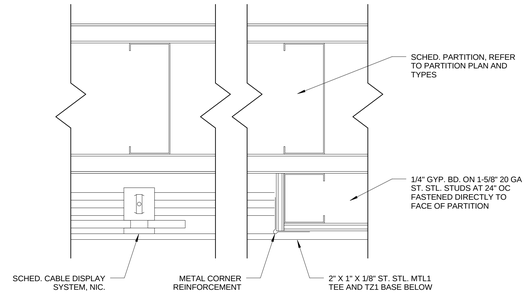

3 PANEL DISPLAY SYSTEM PLAN

A-944 REF. A-931 SCALE: 6" = 1'-0"

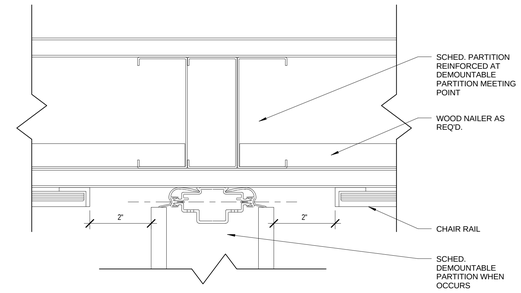

4 DETAIL - PLAN

A-944 REF. SCALE: 6" = 1'-0"

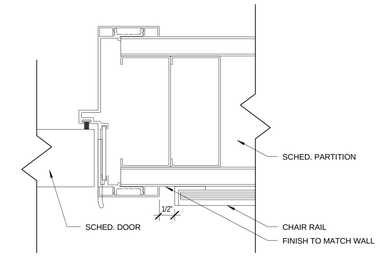

5 DETAIL - PLAN

A-944 REF. A-933 SCALE: 6" = 1'-0"

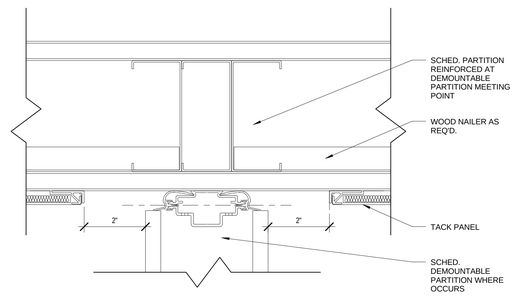

6 DETAIL - PLAN

A-944 REF. SCALE: 6" = 1'-0"

100% SUBMITTAL

AECOM
AECOM TECHNICAL SERVICES, INC.
3101 WILSON BOULEVARD
SUITE 900
ARLINGTON, VA 22201
T: 703-682-4900 F: 703.682.4901
www.aecom.com

SEAL AREA

BOARD OF ARCHITECTS 10094 REGISTERED ARCHITECT STATE OF MARYLAND

KEY PLAN

REV	DATE	DESCRIPTION	S&R BR.	CUSTOMER	PM	SECT. HEAD

	INITIALS	DATE
DRAWN BY	LA/NS	
CHECKED BY	BW/MW	
A-E MANAGER	EW	
ENVIRONMENTAL BRANCH	JH	
SAFETY BRANCH	CS	
CM	MMD	
PM	RWP	
CUSTOMER	JWB	
ENG. BRANCH	DGL	

INTERIOR DETAILS
INTERIOR WALL SECTIONS

A-944

FLIGHT PROJECTS BUILDING

NATIONAL AERONAUTICS AND SPACE ADMINISTRATION
GODDARD SPACE FLIGHT CENTER GREENBELT, MARYLAND
FACILITIES MANAGEMENT DIVISION

DATE ISSUED	CoF CODE OR WR#	AECOM PROJECT NO.	SCALE
10/12/2012	12GXAZ	60187636	6" = 1'-0"

FILE DATE: 10/11/2012 4:23:34 PM

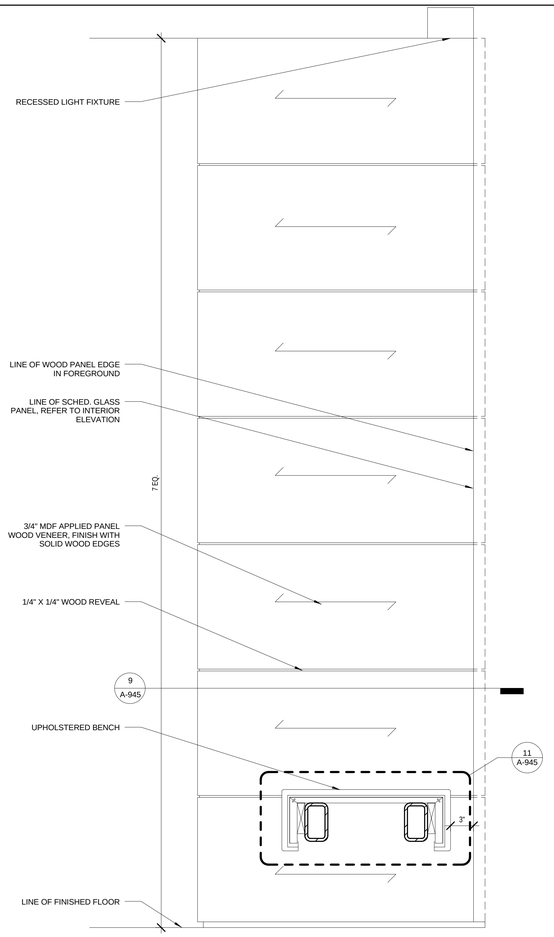

1 SUITE BENCH - SECTION

A-945 REF. A-933 SCALE: 1 1/2" = 1'-0"

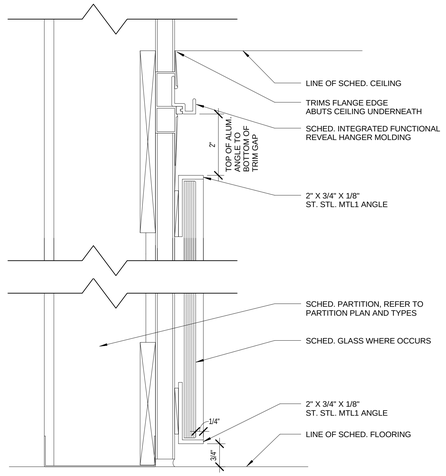

2 GLASS PANEL - SECTION

A-945 REF. A-933 SCALE: 6" = 1'-0"

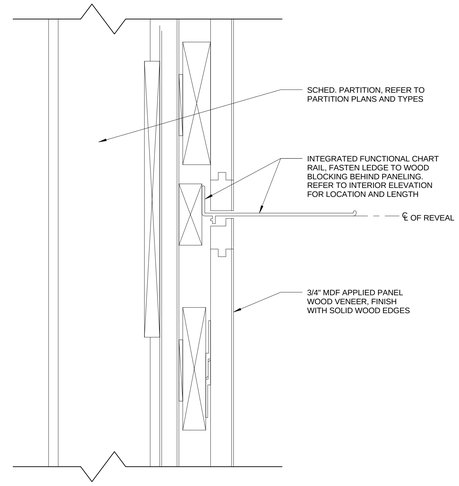

3 CHART RAIL - SECTION

A-945 REF. A-933 SCALE: 6" = 1'-0"

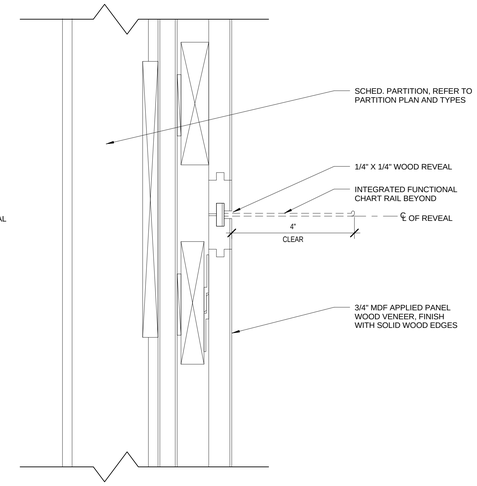

4 WOOD PANELING - SECTION

A-945 REF. A-933 SCALE: 6" = 1'-0"

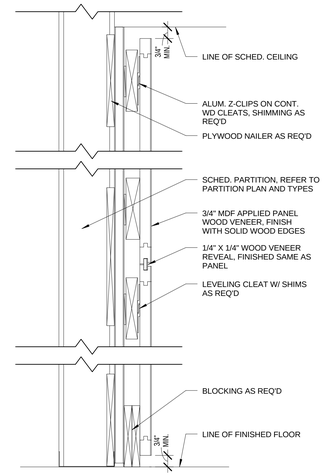

5 WOOD PANELING - SECTION

A-945 REF. A-932 SCALE: 3" = 1'-0"

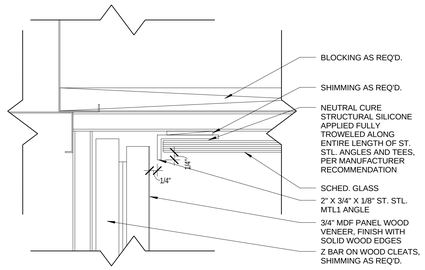

6 ENLARGED DETAIL - PLAN

A-945 REF. A-945 SCALE: 6" = 1'-0"

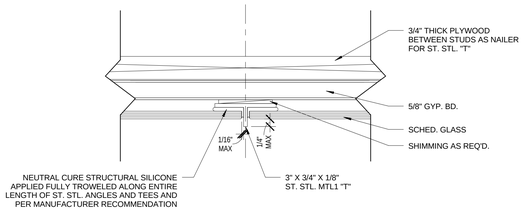

7 DETAIL - PLAN

A-945 REF. A-933 SCALE: 6" = 1'-0"

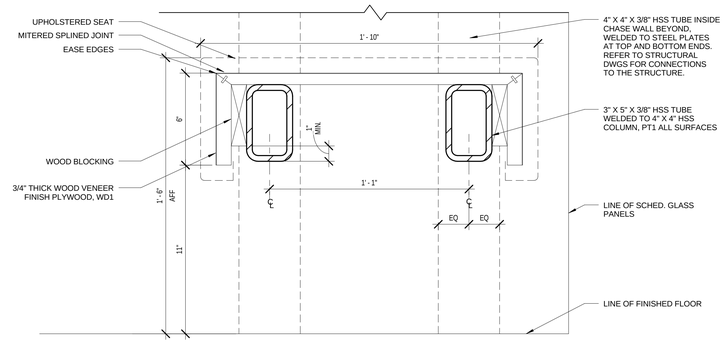

8 SUITE BENCH TABLE SECTION

A-945 REF. A-933 SCALE: 3" = 1'-0"

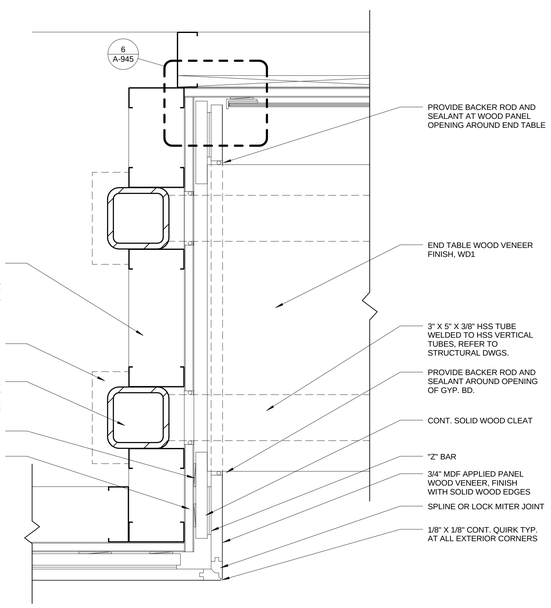

9 ENLARGED SUITE BENCH PLAN

A-945 REF. A-945 SCALE: 3" = 1'-0"

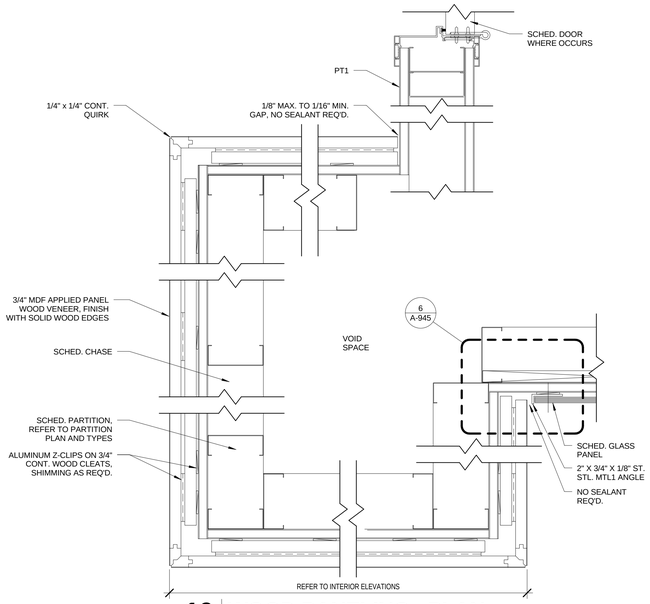

10 WOOD PANELING - PLAN

A-945 REF. A-933 SCALE: 3" = 1'-0"

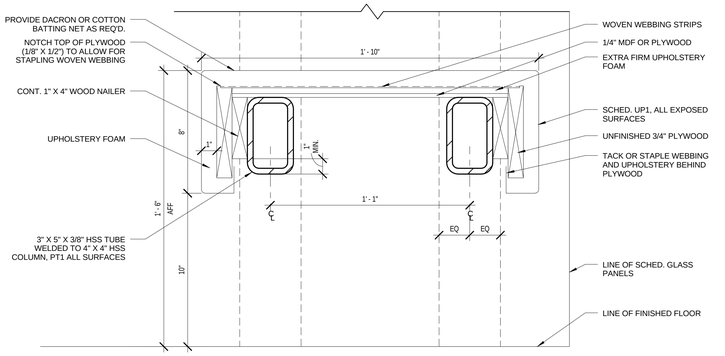

11 SUITE BENCH - SECTION

A-945 REF. A-933 SCALE: 3" = 1'-0"

100% SUBMITTAL

AECOM

AECOM TECHNICAL SERVICES, INC.
3101 WILSON BOULEVARD
SUITE 900
ARLINGTON, VA 22201

T: 703-682-4900 F: 703.682.4901
www.aecom.com

SEAL AREA

BOARD OF ARCHITECTS 10094 EDWARD D. WEBER STATE OF MARYLAND

KEY PLAN

REV	DATE	DESCRIPTION	S&R BR.	CUSTOMER	PM	SECT. HEAD

	INITIALS	DATE
DRAWN BY	LA/NS	
CHECKED BY	BW/MW	
A-E MANAGER	EW	
ENVIRONMENTAL BRANCH	JH	
SAFETY BRANCH	CS	
CM	MMD	
PM	RWP	
CUSTOMER	JWB	
ENG. BRANCH	DGL	
ARCHITECTURE		

INTERIOR DETAILS
BANQUETTE & WOOD PANELING

A-945

FLIGHT PROJECTS BUILDING

NATIONAL AERONAUTICS AND SPACE ADMINISTRATION

GODDARD SPACE FLIGHT CENTER GREENBELT, MARYLAND
FACILITIES MANAGEMENT DIVISION

DATE ISSUED	CoF CODE OR WR#	AECOM PROJECT NO.	SCALE
10/12/2012	12GXAZ	60187636	As indicated

FILE DATE: 10/11/2012 4:23:48 PM

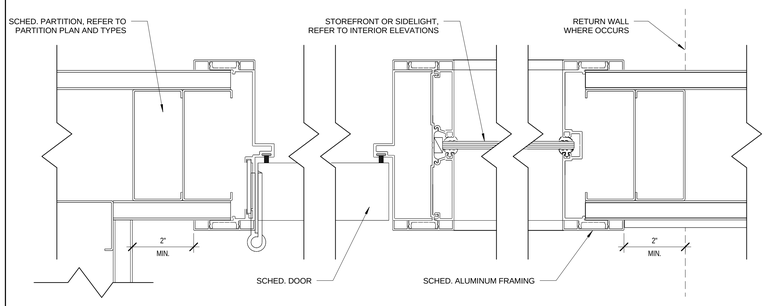

1 DOOR & STOREFRONT / SIDELIGHT DETAIL PLAN

A-946 REF. A-935 SCALE: 6" = 1'-0"

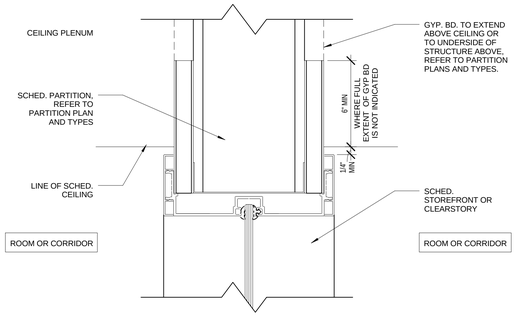

2 STOREFRONT HEADER DETAIL SECTION

A-946 REF. SCALE: 6" = 1'-0"

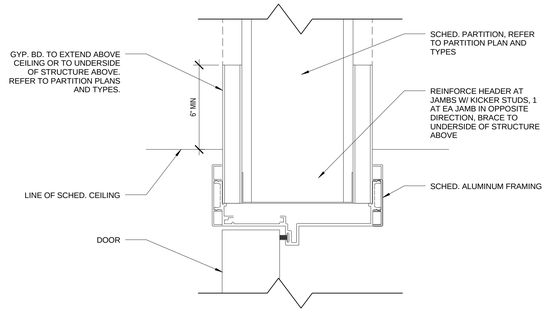

3 DOOR HEADER DETAIL SECTION

A-946 REF. A-934 SCALE: 6" = 1'-0"

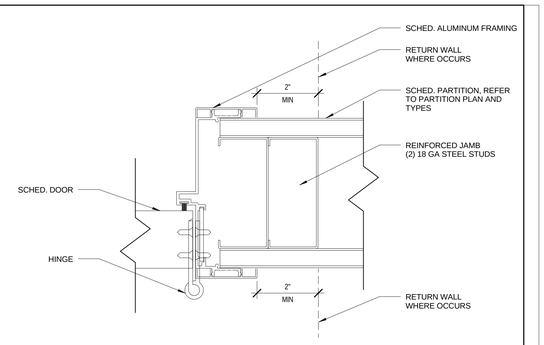

4 HINGED JAMB DETAIL PLAN

A-946 REF. A-934 SCALE: 6" = 1'-0"

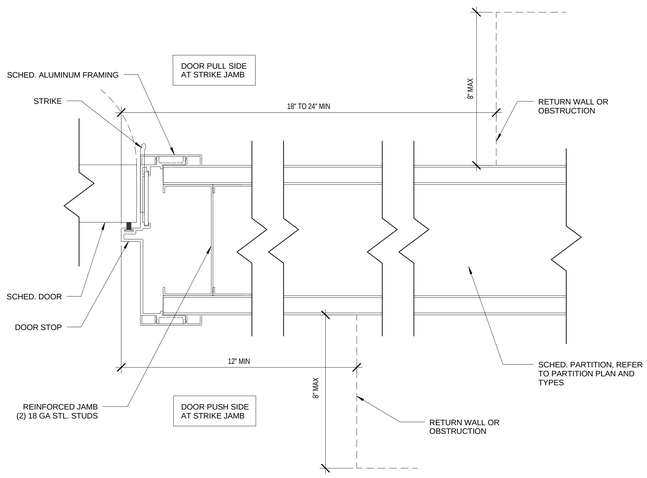

5 STRIKE JAMB DETAIL PLAN, TYP.

A-946 REF. SCALE: 6" = 1'-0"

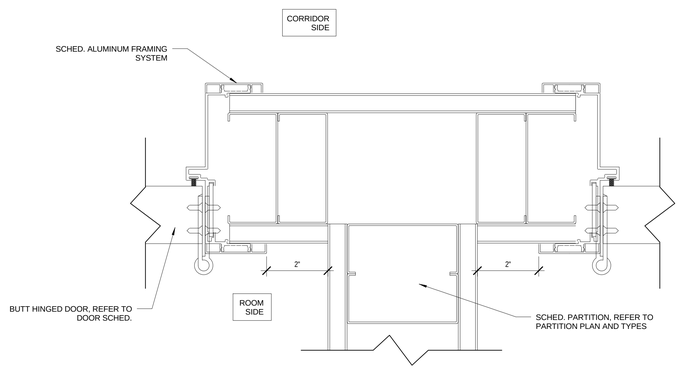

6 CODE 101 DETAIL PLAN

A-946 REF. A-935 SCALE: 6" = 1'-0"

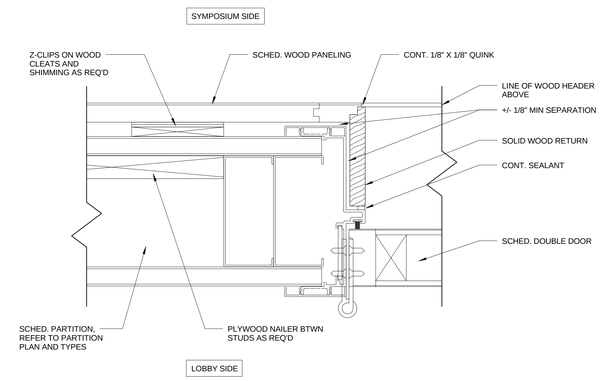

7 SYMPOSIUM DOOR DETAIL PLAN

A-946 REF. A-931 SCALE: 6" = 1'-0"

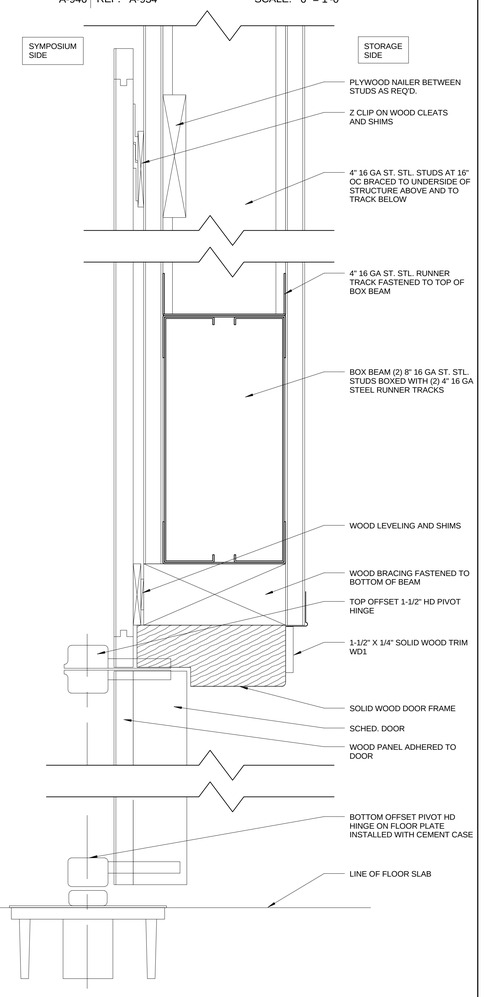

12 SYMPOSIUM STORAGE DOOR DETAIL SECTION

A-946 REF. A-932 SCALE: 6" = 1'-0"

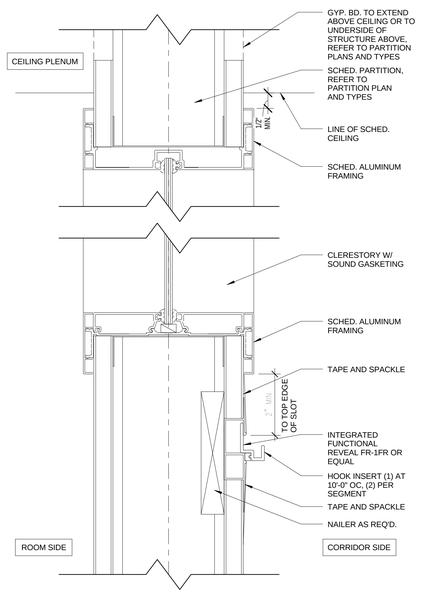

8 CLERESTORY SECTION CODE 101, TYP.

A-946 REF. A-935 SCALE: 6" = 1'-0"

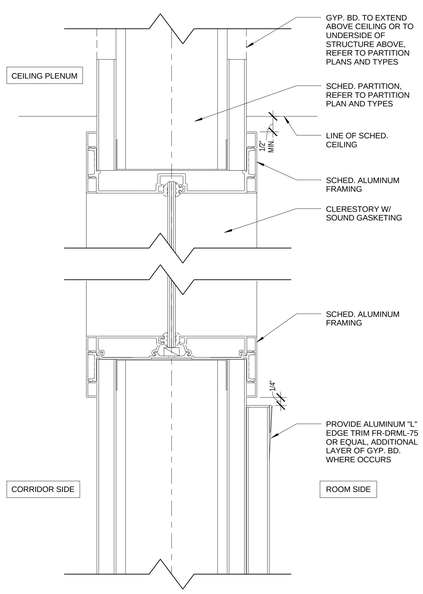

9 CLERESTORY SECTION, TYP.

A-946 REF. A-934 SCALE: 6" = 1'-0"

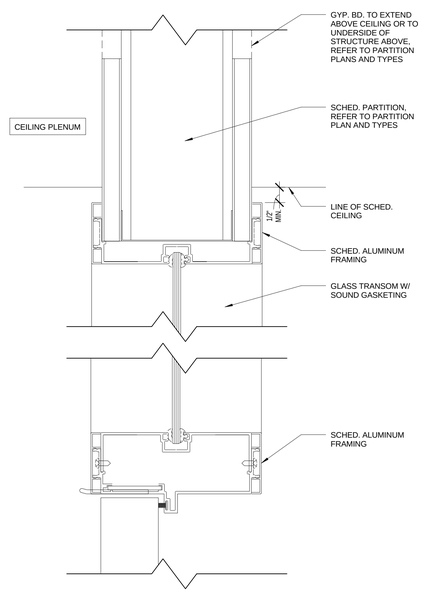

10 CLERESTORY AT DOOR SECTION, TYP.

A-946 REF. A-934 SCALE: 6" = 1'-0"

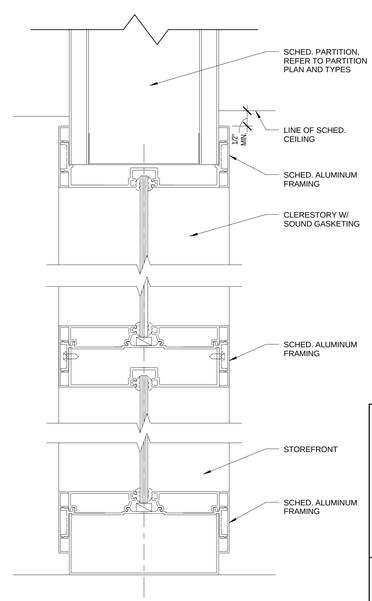

11 STOREFRONT SECTION, TYP.

A-946 REF. A-934 SCALE: 6" = 1'-0"

NOTE: SOUND GASKETING AT CLERESTORY.

100% SUBMITTAL

AECOM

AECOM TECHNICAL SERVICES, INC.
3101 WILSON BOULEVARD
SUITE 900
ARLINGTON, VA 22201

T: 703-682-4900 F: 703.682.4901
www.aecom.com

SEAL AREA

BOARD OF ARCHITECTS
EDWARD L. WEAVER
No. 10094
STATE OF MARYLAND

KEY PLAN

REV	DATE	DESCRIPTION	S&R BR.	CUSTOMER	PM	SECT. HEAD

	INITIALS	DATE
DRAWN BY	LA/NS	
CHECKED BY	BW/MW	
A-E MANAGER	EW	
ENVIRONMENTAL BRANCH	JH	
SAFETY BRANCH	CS	
CM	MMD	
PM	RWP	
CUSTOMER	JWB	
ENG. BRANCH	DGL	

ARCHITECTURE

INTERIOR DETAILS DOORS & GLAZING

A-946

FLIGHT PROJECTS BUILDING

NATIONAL AERONAUTICS AND SPACE ADMINISTRATION

GODDARD SPACE FLIGHT CENTER GREENBELT, MARYLAND
FACILITIES MANAGEMENT DIVISION

DATE ISSUED	CoF CODE OR WR#	AECOM PROJECT NO.	SCALE
10/12/2012	12GXAZ	60187636	6" = 1'-0"

FILE DATE: 10/11/2012 4:23:58 PM

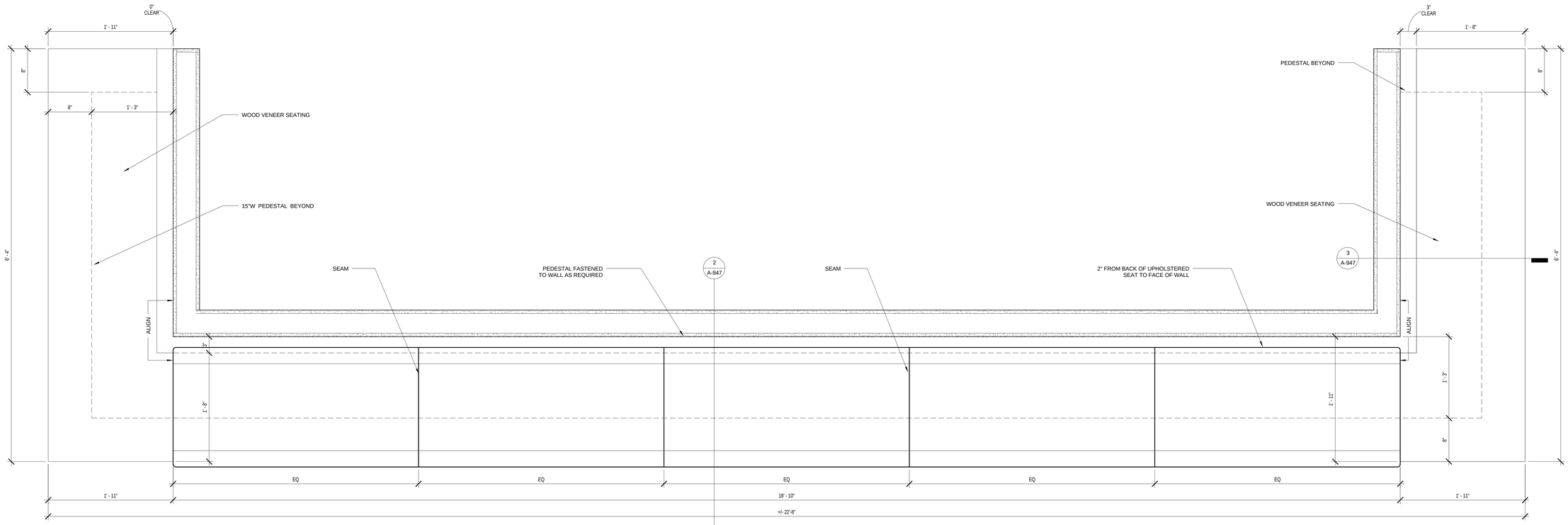

1 PANTRY BENCH ENLARGED PLAN

A-947 REF. SCALE: 1 1/2" = 1'-0"

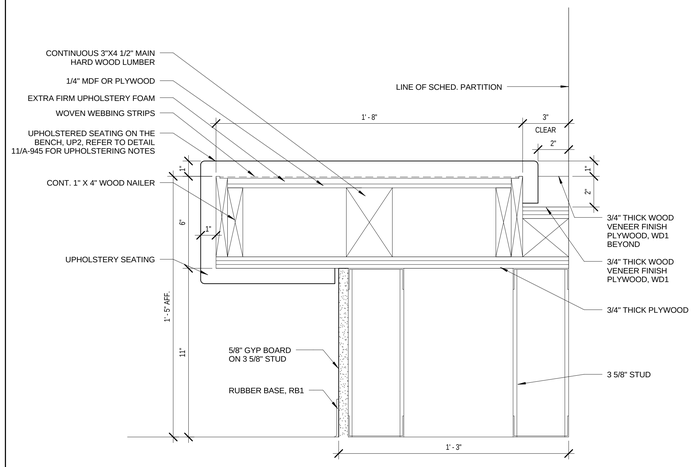

2 PANTRY BENCH SECTION @ UPHOLSTERY SEATING

A-947 REF. A-933 SCALE: 3" = 1'-0"

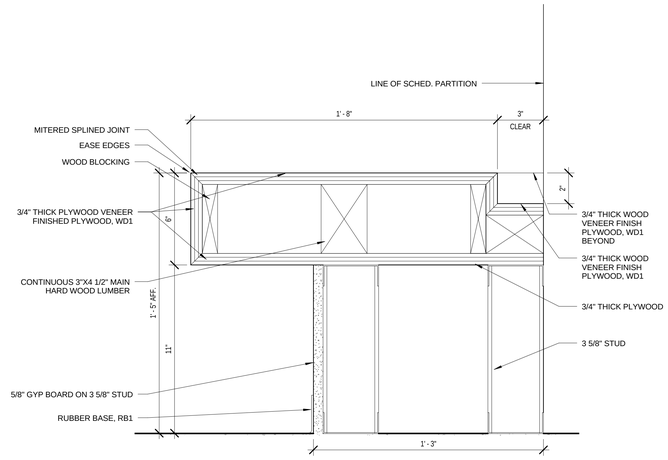

3 PANTRY BENCH SECTION @ WOOD VENEER BENCH

A-947 REF. A-934 SCALE: 3" = 1'-0"

100% SUBMITTAL

AECOM
AECOM TECHNICAL SERVICES, INC.
3101 WILSON BOULEVARD
SUITE 900
ARLINGTON, VA 22201
T: 703-682-4900 F: 703.682.4901
www.aecom.com

SEAL AREA

BOARD OF ARCHITECTS REGISTERED ARCHITECT STATE OF MARYLAND

KEY PLAN

REV	DATE	DESCRIPTION	S&R BR.	CUSTOMER	PM	SECT. HEAD

	INITIALS	DATE
DRAWN BY	LA/NS	
CHECKED BY	BW/MW	
A-E MANAGER	EW	
ENVIRONMENTAL BRANCH	JH	
SAFETY BRANCH	CS	
CM	MMD	
PM	RWP	
CUSTOMER	JWB	
ENG. BRANCH	DGL	

INTERIOR DETAILS PANTRY BENCH

A-947

FLIGHT PROJECTS BUILDING

NATIONAL AERONAUTICS AND SPACE ADMINISTRATION

GODDARD SPACE FLIGHT CENTER GREENBELT, MARYLAND
FACILITIES MANAGEMENT DIVISION

DATE ISSUED	CoF CODE OR WR#	AECOM PROJECT NO.	SCALE
10/12/2012	12GXAZ	60187636	As indicated

FILE DATE: 10/11/2012 4:24:09 PM

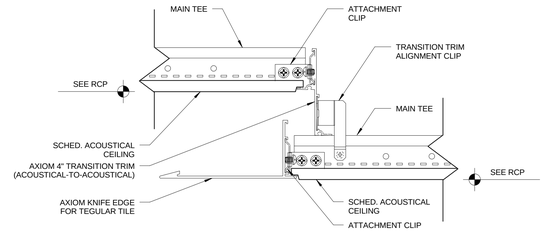

1 DETAIL - SECTION

A-948 REF. A-201a SCALE: 6" = 1'-0"

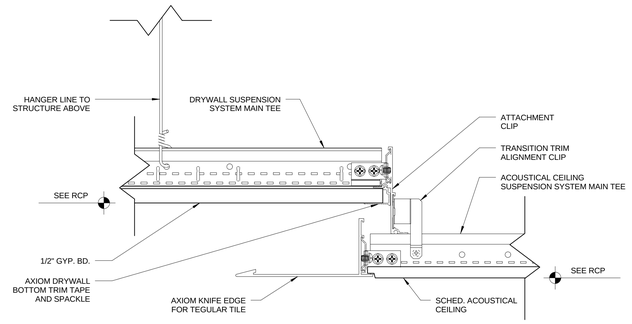

2 DETAIL - SECTION

A-948 REF. A-202b SCALE: 6" = 1'-0"

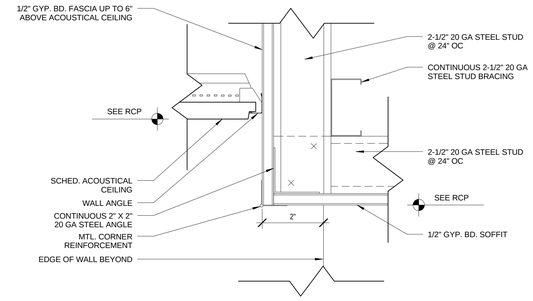

3 DETAIL - SECTION

A-948 REF. A-201a SCALE: 6" = 1'-0"

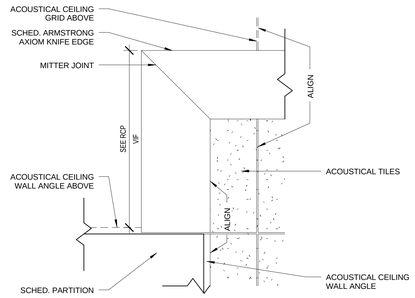

4 DETAIL - PLAN

A-948 REF. A-201a SCALE: 3" = 1'-0"

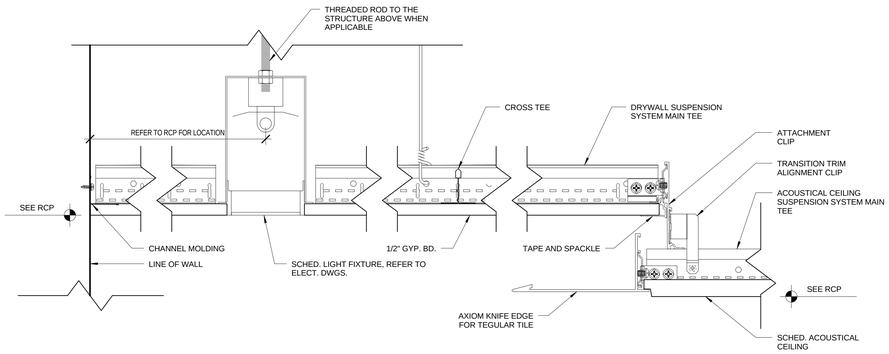

5 DETAIL - SECTION

A-948 REF. A-201a SCALE: 6" = 1'-0"

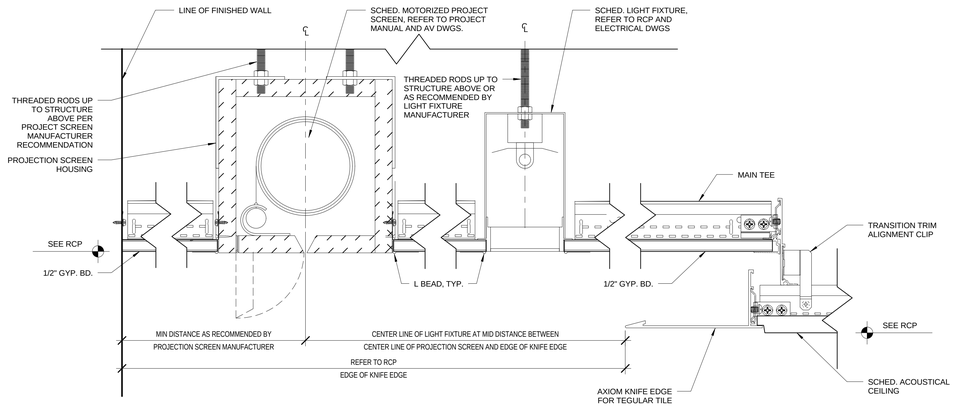

6 DETAIL - SECTION

A-948 REF. A-201a SCALE: 6" = 1'-0"

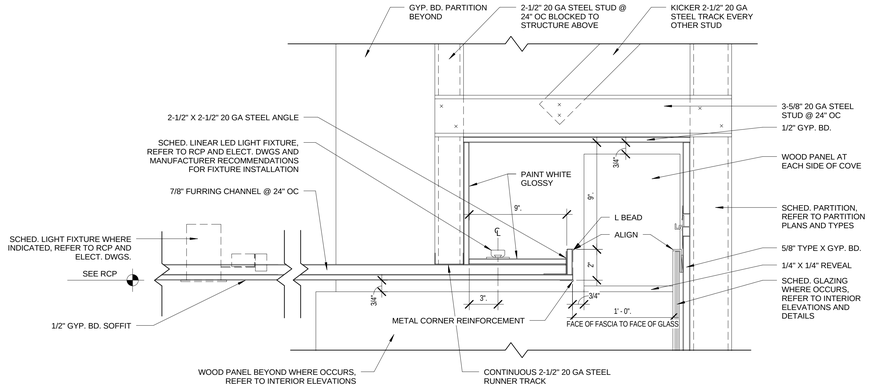

7 DETAIL - SECTION

A-948 REF. A-201a SCALE: 3" = 1'-0"

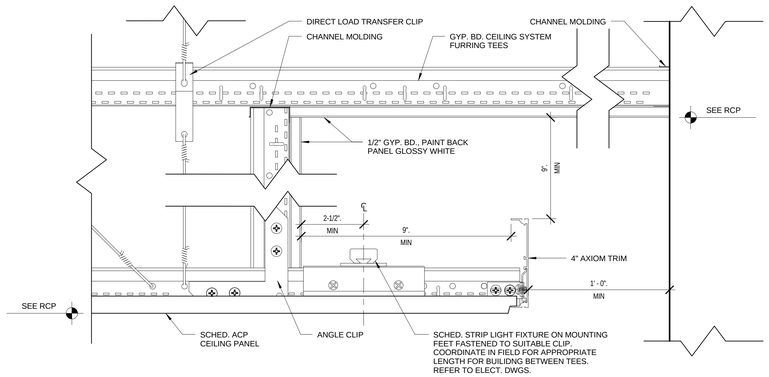

8 DETAIL - SECTION

A-948 REF. A-201b SCALE: 6" = 1'-0"

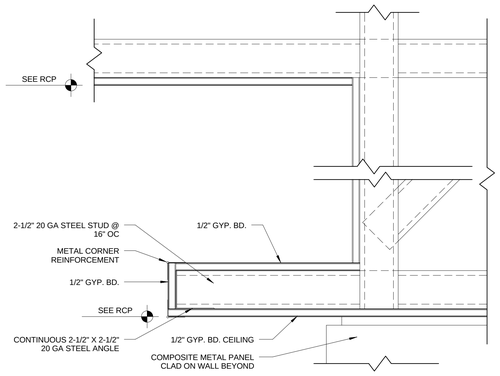

9 DETAIL - SECTION

A-948 REF. A-201b SCALE: 3" = 1'-0"

100% SUBMITTAL

AECOM

AECOM TECHNICAL SERVICES, INC.
3101 WILSON BOULEVARD
SUITE 900
ARLINGTON, VA 22201

T: 703-682-4900 F: 703.682.4901
www.aecom.com

SEAL AREA

BOARD OF ARCHITECTS
EDWARD L. WEISER
STATE OF MARYLAND

KEY PLAN

REV	DATE	DESCRIPTION	S&R BR.	CUSTOMER	PM	SECT. HEAD

	INITIALS	DATE
DRAWN BY	LA/NS	
CHECKED BY	BW/MW	
A-E MANAGER	EW	
ENVIRONMENTAL BRANCH	JH	
SAFETY BRANCH	CS	
CM	MMD	
PM	RWP	
CUSTOMER	JWB	
ENG. BRANCH	DGL	
ARCHITECTURE		

CEILING DETAILS

A-948

FLIGHT PROJECTS BUILDING

NATIONAL AERONAUTICS AND SPACE ADMINISTRATION

GODDARD SPACE FLIGHT CENTER GREENBELT, MARYLAND
FACILITIES MANAGEMENT DIVISION

DATE ISSUED	CoF CODE OR WR#	AECOM PROJECT NO.	SCALE
10/12/2012	12GXAZ	60187636	As indicated

FILE DATE: 10/11/2012 4:24:21 PM

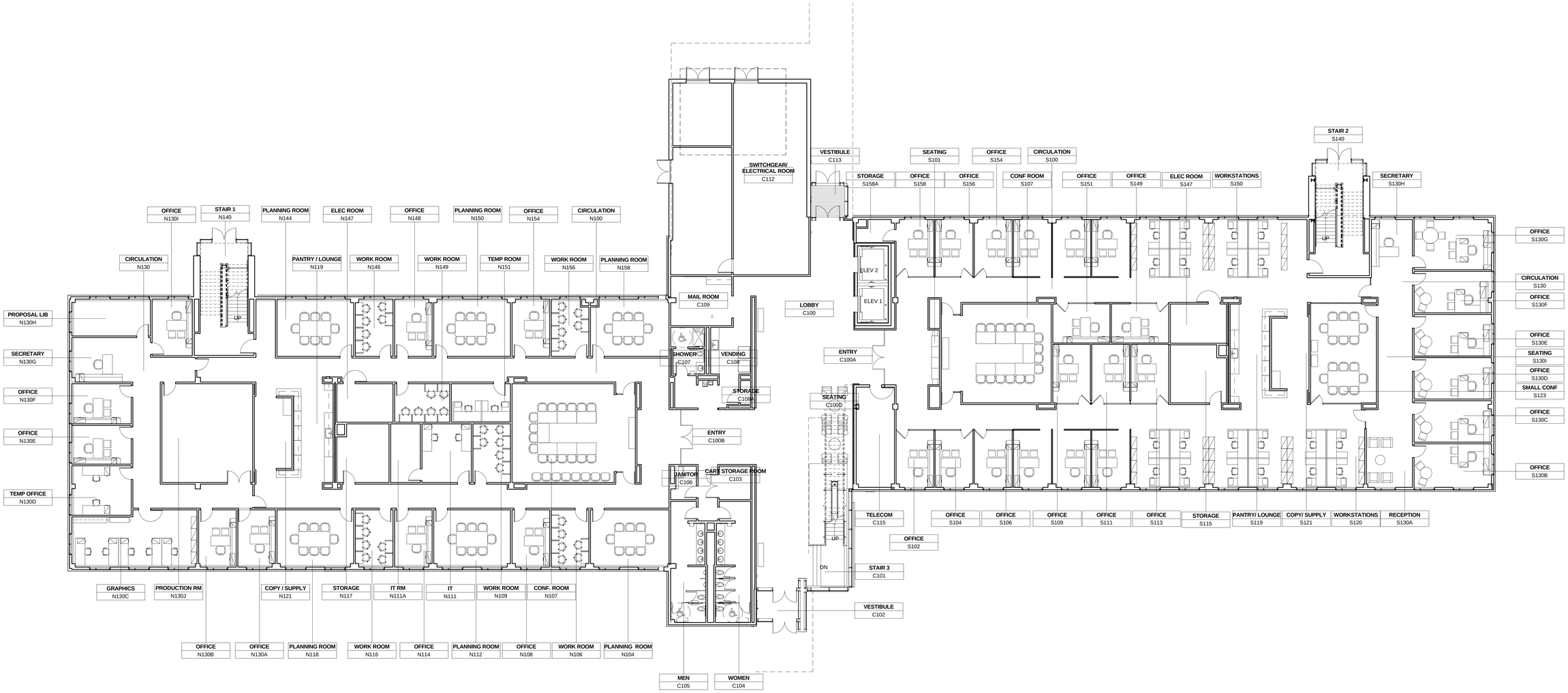

LEVEL 1 - FURNITURE PLAN (NIC - FOR REFERENCE ONLY)

1
A-991 REF. A-301 SCALE: 3/32" = 1'-0"

100% SUBMITTAL

NORTH

3/32"=1'-0" 8' 4' 0 12' 24'

AECOM
AECOM TECHNICAL SERVICES, INC.
3101 WILSON BOULEVARD
SUITE 900
ARLINGTON, VA 22201
T: 703-682-4900 F: 703.682.4901
www.aecom.com

SEAL AREA

BOARD OF ARCHITECTS
EDWARD L. WEISS
STATE OF MARYLAND

KEY PLAN

REV	DATE	DESCRIPTION	S&R BR.	CUSTOMER	PM	SECT. HEAD

	INITIALS	DATE
DRAWN BY	LA/NS	
CHECKED BY	BW/MW	
A-E MANAGER	EW	
ENVIRONMENTAL BRANCH	JH	
SAFETY BRANCH	CS	
CM	MMD	
PM	RWP	
CUSTOMER	JWB	
ENG. BRANCH	DGL	
ARCHITECTURE		

LEVEL 1 - FURNITURE PLAN (NIC)

A-991

FLIGHT PROJECTS BUILDING

NATIONAL AERONAUTICS AND SPACE ADMINISTRATION
GODDARD SPACE FLIGHT CENTER GREENBELT, MARYLAND
FACILITIES MANAGEMENT DIVISION

DATE ISSUED	CoF CODE OR WR#	AECOM PROJECT NO.	SCALE
10/12/2012	12GXAZ	60187636	3/32" = 1'-0"

FILE DATE: 10/11/2012 4:24:31 PM

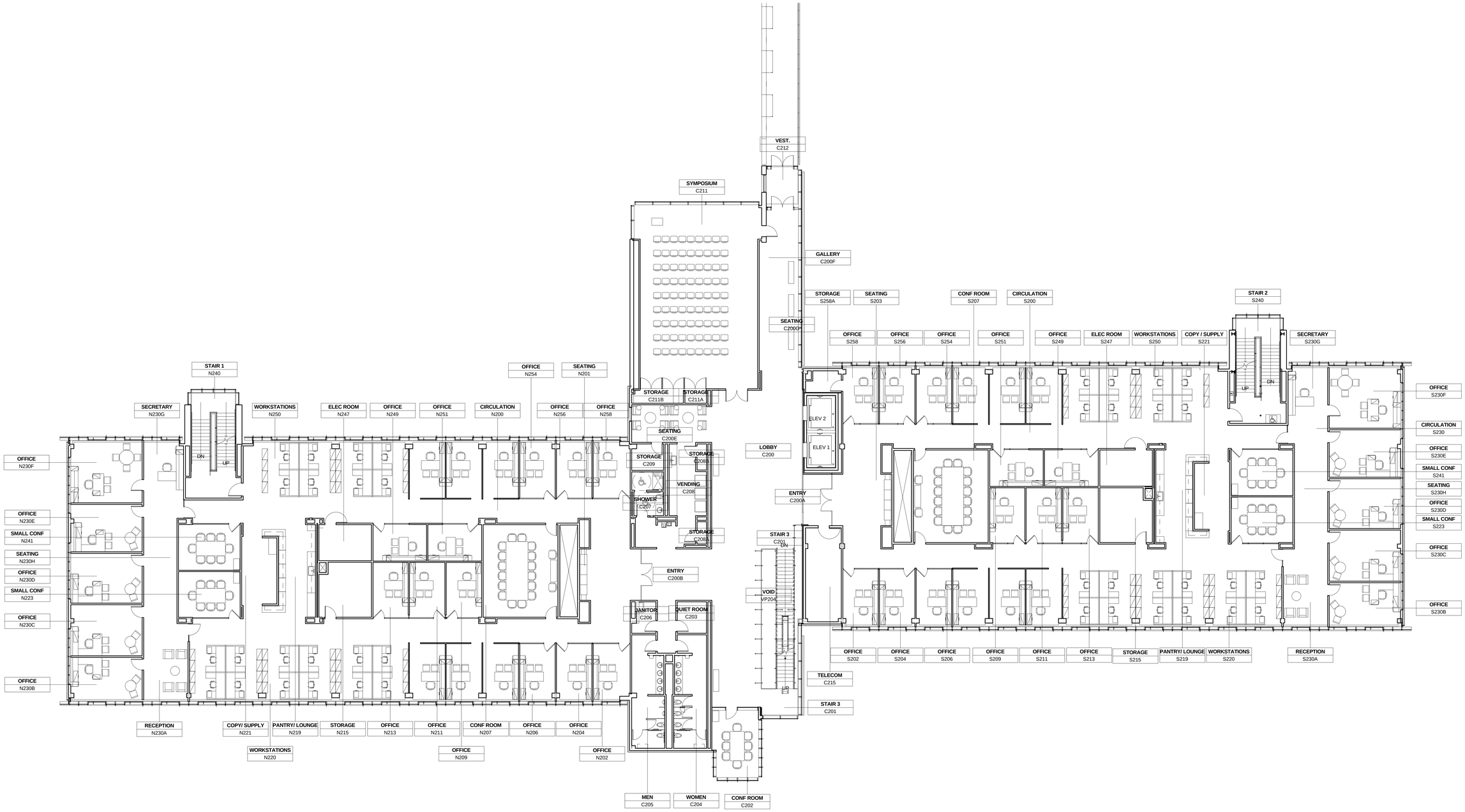

1 LEVEL 2 - FURNITURE PLAN (NIC - FOR REFERENCE ONLY)

A-992 REF. A-301 SCALE: 3/32" = 1'-0"

100% SUBMITTAL

NORTH

3/32"=1'-0" 8' 4' 0 12' 24'

AECOM

AECOM TECHNICAL SERVICES, INC.
3101 WILSON BOULEVARD
SUITE 900
ARLINGTON, VA 22201

T: 703-682-4900 F: 703.682.4901
www.aecom.com

SEAL AREA

BOARD OF ARCHITECTS 10594 COMMONWEALTH OF MASSACHUSETTS STATE OF MARYLAND

KEY PLAN

REV	DATE	DESCRIPTION	S&R BR.	CUSTOMER	PM	SECT. HEAD

	INITIALS	DATE
DRAWN BY	LA/NS	
CHECKED BY	BW/MW	
A-E MANAGER	EW	
ENVIRONMENTAL BRANCH	JH	
SAFETY BRANCH	CS	
CM	MMD	
PM	RWP	
CUSTOMER	JWB	
ENG. BRANCH	DGL	
ARCHITECTURE		

LEVEL 2 - FURNITURE PLAN (NIC)

A-992

FLIGHT PROJECTS BUILDING

NATIONAL AERONAUTICS AND SPACE ADMINISTRATION

GODDARD SPACE FLIGHT CENTER GREENBELT, MARYLAND
FACILITIES MANAGEMENT DIVISION

DATE ISSUED	CoF CODE OR WR#	AECOM PROJECT NO.	SCALE
10/12/2012	12GXAZ	60187636	3/32" = 1'-0"

FILE DATE: 10/11/2012 4:24:48 PM

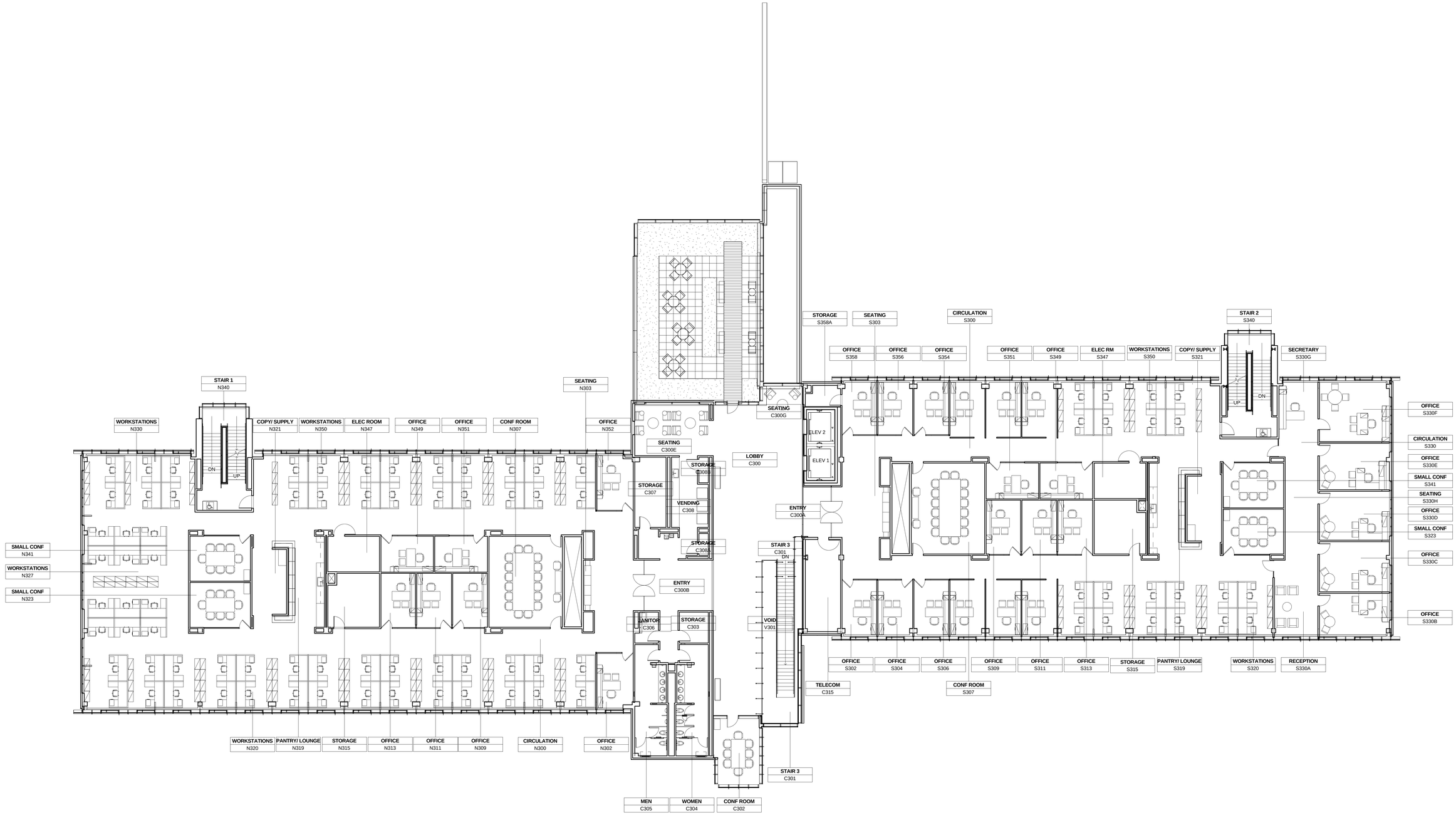

1 LEVEL 3 - FURNITURE PLAN (NIC - FOR REFERENCE ONLY)

A-993 REF. A-301 SCALE: 3/32" = 1'-0"

100% SUBMITTAL

NORTH

3/32"=1'-0" 8' 4' 0 12' 24'

AECOM

AECOM TECHNICAL SERVICES, INC.
3101 WILSON BOULEVARD
SUITE 900
ARLINGTON, VA 22201

T: 703-682-4900 F: 703.682.4901
www.aecom.com

SEAL AREA

BOARD OF ARCHITECTS 10084 ERIC W. WARNER REGISTERED ARCHITECT STATE OF MARYLAND

KEY PLAN

REV	DATE	DESCRIPTION	S&R BR.	CUSTOMER	PM	SECT. HEAD

	INITIALS	DATE
DRAWN BY	LA/NS	
CHECKED BY	BW/MW	
A-E MANAGER	EW	
ENVIRONMENTAL BRANCH	JH	
SAFETY BRANCH	CS	
CM	MMD	
PM	RWP	
CUSTOMER	JWB	
ENG. BRANCH	DGL	
ARCHITECTURE		

LEVEL 3 - FURNITURE PLAN (NIC)

A-993

FLIGHT PROJECTS BUILDING

NATIONAL AERONAUTICS AND SPACE ADMINISTRATION

GODDARD SPACE FLIGHT CENTER GREENBELT, MARYLAND
FACILITIES MANAGEMENT DIVISION

DATE ISSUED	CoF CODE OR WR#	AECOM PROJECT NO.	SCALE
10/12/2012	12GXAZ	60187636	3/32" = 1'-0"

FILE DATE: 10/11/2012 4:25:04 PM

1 LEVEL 4 - FURNITURE PLAN (NIC - FOR REFERENCE ONLY)

A-994 REF. A-301 SCALE: 3/32" = 1'-0"

100% SUBMITTAL

NORTH

3/32"=1'-0" 8' 4' 0 12' 24'

AECOM

AECOM TECHNICAL SERVICES, INC.
3101 WILSON BOULEVARD
SUITE 900
ARLINGTON, VA 22201

T: 703-682-4900 F: 703.682.4901
www.aecom.com

SEAL AREA

BOARD OF ARCHITECTS 10984 ERIC WILSON WEST STATE OF MARYLAND

KEY PLAN

REV	DATE	DESCRIPTION	S&R BR.	CUSTOMER	PM	SECT. HEAD

	INITIALS	DATE
DRAWN BY	Designer	
CHECKED BY	Checker	
A-E MANAGER	EW	
ENVIRONMENTAL BRANCH	JH	
SAFETY BRANCH	CS	
CM	MMD	
PM	RWP	
CUSTOMER	JWB	
ENG. BRANCH	DGL	
ARCHITECTURE		

LEVEL 4 - FURNITURE PLAN (NIC)

A-994

FLIGHT PROJECTS BUILDING

NATIONAL AERONAUTICS AND SPACE ADMINISTRATION

GODDARD SPACE FLIGHT CENTER GREENBELT, MARYLAND
FACILITIES MANAGEMENT DIVISION

DATE ISSUED	CoF CODE OR WR#	AECOM PROJECT NO.	SCALE
10/12/2012	12GXAZ	60187636	3/32" = 1'-0"

FILE DATE: 10/11/2012 4:25:18 PM

MAJOR CODES AND STANDARDS:

1. 2009 INTERNATIONAL BUILDING CODE INCLUDING THE MARYLAND BUILDING PERFORMANCE STANDARDS.
2. ACI 318–08
3. ANSI/AISC 360–05 LRFD, 13TH EDITION
4. AWS D1.1–04, D1.3–98, D1.4–98
5. ASTM, CURRENT EDITION
6. AISI S100–07 NORTH AMERICAN, SPECIFICATION FOR THE DESIGN OF COLD–FORMED STEEL STRUCTURAL MEMBERS AND AISI S200–07, STANDARD FOR COLD–FORMED STEEL FRAMING – GENERAL PROVISIONS.
7. ACI 530–08
8. NASA GSFC CODE 220 STANDARD REFERENCE DOCUMENT FOR FACILITIES (JULY 2010)

DESIGN LOADS:

1. DEAD LOADS: ACTUAL CALCULATED WEIGHTS OF PERMANENT STRUCTURES AND ITEMS PERMANENTLY ATTACHED TO THE STRUCTURE AS FOLLOWS.

   MECHANICAL/ELECTRICAL/PLUMBING/CEILING.................................... 15 PSF
   CMU PARTITIONS.................................... ACTUAL WEIGHT
   GREEN ROOF.................................... 41 PSF
   ROOF PAVERS .... 30 PSF
   CURTAIN WALL FACADE .... 14 PSF

2. LIVE LOADS:

   STAIRS.................................... 100 PSF
   MECHANICAL PENTHOUSE.................................... 155 PSF
   OFFICES.................................... 105 PSF
   COPY/SUPPLY ROOMS.................................... 125 PSF
   LIGHT STORAGE.................................... 125 PSF
   MAIL ROOMS.................................... 125 PSF
   LIBRARY.................................... 150 PSF
   ELEC ROOM.................................... 155 PSF
   OTHER SPACES.................................... 100 PSF
   ROOF TERRACE.................................... 100 PSF
   ROOF.................................... 31 PSF

   LIVE LOADS HAVE BEEN REDUCED IN ACCORDANCE WITH THE REQUIREMENTS OF IBC 2009 SECTION 1607.9

3. SNOW LOADS:

   GROUND SNOW LOAD .... Pg = 25 PSF (ASCE 7)
   FLAT ROOF SNOW LOAD .... Pf = 30 PSF (PG County Code)
   SNOW EXPOSURE FACTOR .... Ce = 1.0
   SNOW LOAD IMPORTANCE FACTOR .... Is = 1.0
   THERMAL FACTOR .... Ct = 1.0

4. WIND LOADS:

   BASIC WIND SPEED .... 90 MPH
   WIND IMPORTANCE FACTOR .... Iw = 1.00
   WIND EXPOSURE .... B
   INTERNAL PRESSURE COEFFICIENT .... +/– 0.18

   i) FOR THE WIND DESIGN OF THE CLADDING SYSTEMS, THE HIGH PRESSURE CORNER ZONES DIMENSIONS SHALL BE CALCULATED BASED ON THE OVERALL BUILDING DIMENSIONS BUT SHALL APPLY TO ALL THE CORNERS (OUTSIDE AND INTERMEDIATE) OF THE BUILDING. SEE SHEET S–004 FOR COMPONENT AND CLADDING PRESSURES AND ZONES.

5. SEISMIC LOADS:

   SEISMIC IMPORTANCE FACTOR .... Ie = 1.00
   SPECTRAL RESPONSE ACCELERATIONS .... Ss = 0.155
   .... S1 = 0.050
   SITE CLASS .... D
   SPECTRAL RESPONSE COEFFICIENTS .... Sds = 0.165
   .... Sd1 = 0.080
   SEISMIC DESIGN CATEGORY .... B
   OCCUPANCY CATEGORY II

   BASIC SEISMIC–FORCE–RESISTING SYSTEM:

   NORTH–SOUTH:
   ORDINARY STEEL MOMENT FRAMES NOT SPECIFICALLY DETAILED FOR SEISMIC RESISTANCE
   RESPONSE MODIFICATION COEFFICIENT............... R = 3.0
   SYSTEM OVER–STRENGTH FACTOR...................... Ω = 3.0
   DEFLECTION AMPLIFICATION FACTOR.................. Cd = 3.0
   SEISMIC RESPONSE COEFFICIENT...................... Cs = 0.029

   BASE SHEAR .... 414 KIPS (SEISMIC – ULTIMATE LEVEL)

   EAST–WEST:
   ORDINARY STEEL CONCENTRICALLY BRACED FRAMES, NOT SPECIFICALLY DETAILED FOR SEISMIC RESISTANCE
   RESPONSE MODIFICATION COEFFICIENT............... R = 3.0
   SYSTEM OVER–STRENGTH FACTOR...................... Ω = 3.0
   DEFLECTION AMPLIFICATION FACTOR.................. Cd = 3.0
   SEISMIC RESPONSE COEFFICIENT...................... Cs = 0.029

   BASE SHEAR .... 414 KIPS (SEISMIC – ULTIMATE LEVEL)

   ANALYSIS METHOD USED .... EQUIVALENT LATERAL FORCE

6. PROGRESSIVE COLLAPSE DESIGN DATA:

   PROGRESSIVE COLLAPSE DESIGN REQUIREMENTS HAVE BEEN WAIVED BY THE AHJ.

7. ATFP DESIGN DATA:

   ATFP DESIGN REQUIREMENTS HAVE BEEN WAIVED BY THE AHJ.

GENERAL:

1. THE CONTRACTOR SHALL MEASURE AND PROVIDE ALL EXISTING FIELD DIMENSIONS, ELEVATIONS AND CONDITIONS AT THE JOB SITE PRIOR TO CONSTRUCTION AND THE SUBMISSION OF SHOP DRAWINGS, AND SHALL NOTIFY THE CONTRACTING OFFICER AND ARCHITECT IMMEDIATELY OF ANY DISCREPANCIES. VERIFICATION AND NOTIFICATION SHALL PROCEED PRIOR TO THE START OF WORK SO THAT ANY NECESSARY CHANGES CAN BE MADE WITHOUT DELAYING THE PROJECT SCHEDULE.
2. THE CONTRACTOR SHALL REVIEW AND COORDINATE DIMENSIONS PROVIDED IN THE CONTRACT DOCUMENTS. LAYOUT OF BUILDING FOUNDATIONS AND OTHER STRUCTURAL MEMBERS SHALL BE BASED ON THE FULL SET OF CONTRACT DOCUMENTS, INCLUDING BUT NOT LIMITED TO THE ARCHITECTURAL, CIVIL AND STRUCTURAL DRAWINGS AND PROJECT SPECIFICATIONS. INCONSISTENCIES OR OMISSIONS IN DIMENSIONS SHALL BE FORWARDED TO THE CONTRACTING OFFICER FOR REVIEW AND RESOLUTION PRIOR TO PROCEEDING.
3. THE STRUCTURAL DESIGN IS BASED ON THE STRUCTURE IN ITS COMPLETED STATE. THE CONTRACTOR AND HIS SUBS SHALL BE RESPONSIBLE FOR PROVIDING TEMPORARY BRACING AND SHORING, AS REQUIRED, TO ENSURE VERTICAL AND LATERAL STABILITY OF THE ENTIRE STRUCTURE OR PORTION THEREOF DURING CONSTRUCTION.
4. DETAILS, SECTIONS, AND NOTES SHOWN ON THESE DRAWINGS ARE INTENDED TO BE TYPICAL AND SHALL APPLY TO SIMILAR CONDITIONS ELSEWHERE UNLESS OTHERWISE SHOWN OR NOTED.
5. ALL WALLS ARE DESIGNED AS LATERALLY BRACED BY THE FLOOR AND ROOF SYSTEMS (U.N.O). CONTRACTOR SHALL ENSURE THAT WALLS ARE ADEQUATELY BRACED DURING CONSTRUCTION.
6. TEMPORARY BRACING SHALL BE PROVIDED FOR ALL WALLS SUBJECT TO UNBALANCED BACKFILL. BRACE WALL PLUMB UNTIL STABILIZING ELEMENT ABOVE IS IN PLACE.
7. ANY REQUIRED TEMPORARY SHEETING AND SHORING SHALL BE IN CONFORMANCE WITH OSHA REGULATIONS. UNBRACED EXCAVATIONS SHALL BE SLOPED NO GREATER THAN (1.5) HORIZONTAL TO (1) VERTICAL.
8. IT IS THE CONTRACTOR'S RESPONSIBILITY TO RETAIN THE SERVICES OF A REGISTERED STRUCTURAL ENGINEER TO DETERMINE THE ALLOWABLE TEMPORARY CONSTRUCTION LOADS AND TO PROVIDE A DESIGN FOR ALL FORMWORK, STAGING, BRACING, SHEETING AND SHORING WHENEVER THE LOADING FROM THE CONTRACTOR'S WORK EXCEEDS THE ALLOWABLE LIVE LOAD CAPACITIES OF THE DESIGNED STRUCTURE.
9. CONTRACTOR SHALL LOCATE ALL UNDERGROUND UTILITIES IN VICINITY OF FOUNDATIONS AND DETERMINE IF A CONFLICT EXISTS. CONTRACTOR SHALL ALSO PROVIDE INFORMATION ON LOCATION, SIZE AND ELEVATION OF UTILITIES PRIOR TO START OF WORK SO THAT ANY NECESSARY CHANGES CAN BE MADE WITHOUT DELAYING THE PROJECT SCHEDULE.
10. THE DEVELOPMENT AND IMPLEMENTATION OF JOB SITE SAFETY AND CONSTRUCTION PROCEDURES ARE SOLELY THE RESPONSIBILITY OF THE GENERAL CONTRACTOR.
11. WHERE CONFLICTS EXISTS AMONG THE VARIOUS PARTS OF THE STRUCTURAL CONTRACT DOCUMENTS, INCLUDING THE STRUCTURAL DRAWINGS, GENERAL NOTES, AND SPECIFICATIONS, THE STRICTEST REQUIREMENT, AS INDICATED BY THE ENGINEER, SHALL GOVERN.

MASONRY:

1. ALL HOLLOW CONCRETE MASONRY UNITS SHALL BE MEDIUM WEIGHT OR LIGHT WEIGHT AND CONFORM TO ASTM C90 TYPE I HAVING A NET AREA STRENGTH, f'm = 1500 PSI (UNIT STRENGTH METHOD).
2. ALL CLAY BRICK CONCRETE MASONRY UNITS SHALL CONFORM TO ASTM C216 GRADE SW WITH A MINIMUM COMPRESSIVE STRENGTH = 3000 PSI.
3. GALVANIZED HORIZONTAL JOINT REINFORCEMENT SHALL BE PLACED IMMEDIATELY ABOVE AND BELOW ALL OPENINGS AND AT 16" O.C. VERTICALLY. REINFORCEMENT SHALL BE LADDER TYPE, AND WHERE SPLICED, SHALL LAP A MINIMUM OF 8". REINFORCEMENT SHALL CONFORM TO ASTM A–82.
4. ALL VERTICAL WALL REINFORCEMENT INTERRUPTED BY WALL OPENINGS SHALL BE PLACED IMMEDIATELY ADJACENT TO EACH OF THE OPENINGS.
5. MASONRY MORTAR SHALL BE ASTM C270 TYPE S FOR ABOVE GRADE WALLS, TYPE M FOR BELOW GRADE WALLS.
6. ALL MASONRY CELLS CONTAINING BOLTS OR REINFORCEMENT SHALL BE FILLED WITH (FINE OR COARSE) GROUT PER ASTM C476, AGGREGATE PER ASTM C404.
7. PROVIDE TWO (2) COURSES OF SOLID CMU PER ASTM C 90 OR THREE (3) CMU CELLS GROUT–FILLED BENEATH ALL BEAM AND HEADER BEARING POINTS (U.N.O.). REFERENCE 7/S–321 FOR ADDITIONAL INFO.
8. PROVIDE DOWELS WITH STANDARD BAR HOOK IN FOOTING TO MATCH DIAMETER AND SPACING OF VERTICAL REINFORCEMENT. MINIMUM LAP LENGTH AS INDICATED IN DEVELOPMENT/LAP LENGTH TABLE BELOW.
9. PROVIDE 2–#5 CORNER BARS AT ALL BOND BEAM CORNERS TO LAP A MINIMUM OF 48 BAR DIAMETERS (UNLESS NOTED OTHERWISE).
10. ALL MASONRY WORK SHALL BE IN CONFORMANCE WITH THE "SPECIFICATIONS FOR MASONRY STRUCTURES" ACI 530.1–08/ASCE 6–08/TMS 602–08.
11. PROVIDE ADJUSTABLE MASONRY ANCHORS TO STEEL BEAMS AND COLUMNS WHICH ARE EMBEDDED IN MASONRY AT 2'–8" O.C. MAXIMUM.
12. CMU GROUT 28–DAY COMPRESSIVE STRENGTH SHALL BE SELECTED AS REQUIRED TO ACHIEVE THE NET AREA COMPRESSIVE STRENGTH DEFINED IN MASONRY GENERAL NOTE 1.
13. PROVIDE CRACK CONTROL JOINTS AT ALL WALL RETURNS AND JAMBS OF OPENINGS AND AT A MAXIMUM SPACING OF 25–FEET ON CENTER.
14. LINTELS SHALL BE EITHER CONCRETE MASONRY OR STEEL AS SHOWN ON ARCHITECTURAL DRAWINGS. ALL LINTELS SHALL HAVE A MINIMUM BEARING LENGTH OF 8". CONCRETE MASONRY LINTELS SHALL BE SHORED UNTIL THE MASONRY ABOVE HAS CURED. PROVIDE LINTELS AS INDICATED IN THE LINTEL SCHEDULE BELOW.

LINTEL SCHEDULE

SPAN	t* MASONRY LINTEL	STEEL LINTEL/EACH 4" OF WALL THICKNESS
UP TO 4'–0"	t x 8" W/ 2–#5	L3 1/2" x 3 1/2" x 5/16"
4'–1" TO 6'–0"	t x 8" W/ 2–#5	L4 x 3 1/2" x 5/16" (LLV)
6'–1" TO 7'–0"	t x 8" W/ 2–#5	L6 x 3 1/2" x 5/16" (LLV)
7'–1" TO 10'–0"	t x 16" W/ 2–#5 T & B AND #3 TIES @ 16" O.C.	L6 x 3 1/2" x 3/8" (LLV)
10'–1" TO 12'–0"	USE STEEL LINTEL	W8 x 10 W/ 3/8" x b** x CONT ℙ
12'–1" TO 14'–0"	USE STEEL LINTEL	W8 x 15 W/ 3/8" x b** x CONT ℙ

** b = t – 1/2"
* t = MASONRY WALL THICKNESS (NOMINAL)

CONCRETE:

1. ALL CONCRETE SHALL BE NORMAL WEIGHT 145 PCF WET CONCRETE DENSITY (UNLESS OTHERWISE NOTED) AND SHALL BE SUBMITTED TO THE ENGINEER FOR APPROVAL BEFORE USE, WITH COMPRESSIVE STRENGTH AS FOLLOWS:
   SLAB–ON–GRADE.................................... f'c = 3500 PSI (AIR ENTRAINED AT EXTERIOR SLABS)
   CONCRETE FILL ON COMPOSITE DECK (LW)......................... f'c = 4000 PSI (110 PCF)
   FOOTINGS.................................... f'c = 3000 PSI
   CONCRETE FILL ON ROOF DECK (LW)................................. f'c = 3000 PSI (110 PCF)
2. CONCRETE MIX DESIGNS SHALL BE MADE BY AN APPROVED LABORATORY FOR ALL CONCRETE AND SHALL BE SUBMITTED TO THE INSPECTING AGENCY AND ENGINEER FOR APPROVAL BEFORE USE. LIMIT SLUMP TO 8" FOR CONCRETE WITH VERIFIED SLUMP OF 2" TO 4" BEFORE ADDING HIGH–RANGE WATER–REDUCING ADMIXTURE OR PLASTICIZING ADMIXTURES, PLUS OR MINUS 1".
3. CALCIUM CHLORIDE SHALL NOT BE PERMITTED IN CONCRETE.
4. ALL CONCRETE EXPOSED TO WEATHER SHALL BE AIR ENTRAINED.
5. CURING COMPOUND MUST BE APPLIED IMMEDIATELY FOLLOWING FINAL FINISHING.
6. CONCRETE SHALL NOT BE DROPPED THROUGH REINFORCING STEEL SO AS TO CAUSE SEGREGATION OF AGGREGATE. HOPPERS, VERTICAL CHUTES, OR TRUNKS SHALL BE USED IN SUFFICIENT NUMBERS SO THAT THE FREE UNCONFINED FALL OF CONCRETE SHALL NOT EXCEED SIX FEET AND TO ENSURE THAT THE CONCRETE IS KEPT LEVEL AT ALL TIMES.
7. SAND BLAST EXISTING CONCRETE TO 1/4" AMPLITUDE BEFORE FRESH CONCRETE IS PLACED AGAINST CONCRETE IN PLACE, THE CONTACT SURFACE OF CONCRETE IN–PLACE SHALL BE THOROUGHLY CLEANED. ALL LAITANCE SHALL BE REMOVED AND THE CONTACT SURFACES SHALL BE THOROUGHLY SLOSHED WITH GROUT CONSISTING OF ONE PART SAND TO ONE PART CEMENT WITH MINIMUM AMOUNT OF WATER. ROUGHENED CONCRETE SURFACES SHALL BE USED IN LIEU OF SHEAR KEYS UNLESS SPECIFICALLY DIRECTED OTHERWISE BY THE CONTRACTING OFFICER.
8. SUBMIT SHOP DRAWINGS INDICATING CONSTRUCTION AND CONTROL JOINTS FOR CONTRACTING OFFICER APPROVAL.
9. CONCRETE CAST ON SLOPED SURFACES SHALL BEGIN AT THE LOWEST ELEVATION AND CONTINUE MONOLITHICALLY TOWARD THE HIGHER ELEVATION UNTIL THE INTENDED PLACEMENT IS COMPLETED.
10. ALL PLUMBING SLOTS AROUND SLEEVES SHALL BE FILLED WITH FIRE RATED MATERIAL WITH AN EQUIVALENT RATING OF THE ADJACENT FLOOR CONSTRUCTION.
11. CONDUITS IN THE CONCRETE SLAB–ON–GRADE SHALL BE SPACED SUCH THAT THE CENTER TO CENTER DISTANCE BETWEEN CONDUITS IS A MINIMUM OF THREE TIMES THE OUTSIDE DIAMETER OF THE LARGEST CONDUIT.
12. CONDUIT HAVING OUTSIDE DIAMETER LARGER THAN ONE THIRD OF THE SLAB–ON–GRADE THICKNESS SHALL NOT BE PERMITTED. CONDUITS THAT CROSS EACH OTHER IN SLAB SHALL NOT CONSUME AT POINT OF INTERSECTION MORE THAN ONE THIRD OF THE SLAB THICKNESS.
13. ALUMINUM CONDUITS ARE NOT PERMITTED IN CONCRETE ELEMENTS.
14. EMBEDDED CONDUITS AND PIPES SHALL NOT BE PERMITTED IN ELEVATED CONCRETE FLOOR SLABS. CONDUITS IN SLAB–ON–GRADE SHALL BE INSTALLED IN ACCORDANCE WITH NOTES 11 & 12.
15. ALL CONCRETE SURFACES AT JOINTS ARE TO BE ROUGHENED TO A 1/4" AMPLITUDE IN LIEU OF KEYS.

REINFORCING STEEL:

1. ALL REINFORCING STEEL INCLUDING STIRRUPS AND TIES, SHALL BE HIGH STRENGTH, NEW BILLET STEEL CONFORMING TO ASTM A615 GRADE 60 (Fy = 60,000 PSI).
2. ALL REINFORCING SHALL BE DETAILED, FABRICATED, AND PLACED IN ACCORDANCE WITH ACI–315 "MANUAL OF STANDARD PRACTICE FOR DETAILING CONCRETE STRUCTURES (LATEST EDITION).
3. U.N.O. ON STRUCTURAL DRAWINGS, PROVIDE MINIMUM CONCRETE PROTECTION FOR REINFORCING AS FOLLOWS:
   CAST AGAINST EARTH .... 3"

   EXPOSED TO EARTH OR WEATHER
   #5 AND SMALLER BARS AND W.W.F. .... 1–1/2" (U.N.O.)
   #6 AND LARGER BARS .... 2"

   NOT EXPOSED TO EARTH OR WEATHER:
   SLABS AND WALLS:
   #11 AND SMALLER AND W.W.F. .... 3/4"
   #14 AND LARGER BARS .... 1–1/2"
   BEAMS AND COLUMNS .... 1–1/2"

   SLAB SUBJECT TO VEHICULAR TRAFFIC:
   FRAMED SLABS TOP COVER .... 2"
   BOTTOM COVER .... 3/4"
4. WHERE CONSTRUCTION JOINTS ARE PROVIDED, THE REINFORCEMENT SHALL PASS CONTINUOUSLY THROUGH THE JOINT.
5. W.W.F. SHALL HAVE ENDS LAPPED ONE FULL PANEL, COORD W/ SPEC. 03 20 00 SECTION 3.2.
6. ALL WELDING OF REINFORCING TO BE DONE WITH E90XX ELECTRODES IN ACCORDANCE WITH A.W.S. SPECIFICATIONS D1.4 (LATEST EDITION).
7. ANY MECHANICAL SPLICES USED MUST BE "TENSION–COMPRESSION" TYPE AND SHALL COMPLY WITH ACI 318 12.14.3 UNLESS OTHERWISE SPECIFICALLY APPROVED BY THE STRUCTURAL ENGINEER. SHOP DRAWINGS SUBMITTED FOR ENGINEERS APPROVAL MUST INDICATE THE USE AND TYPE OF ANY MECHANICAL SPLICES USED. MECHANICAL SPLICES MUST DEVELOPE 125% OF THE STRENGTH OF BAR IN TENSION.
8. DEVELOPMENT AND LAP SPLICE LENGTH SHALL BE CALCULATED ACCORDING TO ACI 318 CHAPTER 12 OR USE BELOW
   a. DEVELOPMENT LENGTH FOR DEFORMED BARS IN COMPRESSION: ℓdc = 22d
   b. DEVELOPMENT LENGTH FOR DEFORMED BARS IN TENSION SEE SCHEDULE BELOW.
   INCREASE LENGTH 30% FOR LIGHT WEIGHT CONCRETE,
   LAP SPLICE LENGTHS FOR CLASS A SPLICES = 1.0 ℓd
   LAP SPLICE LENGTHS FOR CLASS B SPLICES = 1.3 ℓd

TENSION DEVELOPMENT LENGTH FOR TOP REBARS (INCH)

CONCRETE STRENGTH Fc' (PSI)	REBAR SIZE									
	3	4	5	6	7	8	9	10	11	14	18
3000	21	28	36	43	62	71	80	90	100	121	161
4000	19	25	31	37	54	62	70	79	87	105	139

TENSION DEVELOPMENT LENGTH FOR OTHER REBARS (INCH)

CONCRETE STRENGTH Fc' (PSI)	REBAR SIZE										
	3	4	5	6	7	8	9	10	11	14	18
3000	16	22	27	33	48	55	62	70	77	93	124
4000	15	19	24	28	42	48	54	61	67	81	108

DEVELOPMENT/LAP LENGTH OF BARS IN CMU

COMPRESSIVE STRENGTH F'm (PSI)	REBAR SIZE				
	4	5	6	7	8
1500	20	25	39	50	76

METAL DECKING:

1. CONTRACTOR SHALL PROVIDE MATERIALS, DESIGN AND INSTALLATION OF DECK FOR THE REQUIREMENTS OF STEEL DECK INSTITUTE'S "DESIGN MANUAL FOR COMPOSITE DECKS, FORM DECKS AND ROOF DECKS." DECK PROPERTIES SHALL BE COMPUTED USING THE 2007 EDITION OF AISI SPECIFICATION FOR THE "DESIGN OF COLD–FORMED STEEL STRUCTURAL MEMBERS."
2. METAL ROOF DECKING SHALL BE INTERMEDIATE RIB, TYPE B, GALVANIZED STEEL AT THE MECHANICAL PENTHOUSE ROOF, CONFORMING TO ASTM A653 GRADE A, B, C, D, E OR F WITH MINIMUM YIELD STRESS = 33 KSI. GALVANIZING SHALL CONFORM TO ASTM A924 COATING CLASS G90.
3. COMPOSITE METAL FLOOR DECKING SHALL CONFORM TO ASTM A1008 GRADES C, D, OR E HAVING A MINIMUM YIELD STRENGTH OF 33 KSI. GALVANIZING SHALL CONFORM TO ASTM A924 COATING CLASS G60.
4. TYPE B DECK SHALL BE WELDED TO STRUCTURAL STEEL MEMBERS WITH 3/4" PUDDLE WELDS AND A 36/5 PATTERN. SIDE LAPS FOR METAL DECK DIAPHRAGM SHALL BE (5) 5/8" PUDDLE WELDS OR (5) 1" LONG FILLET WELDS PER SPAN.
5. PROVIDE WELDED WIRE FABRIC IN ALL CONCRETE FILL ON METAL DECK – WWF 6 X 6 – W1.4 X W1.4. CONDUIT SHALL NOT BE EMBEDDED IN CONCRETE FILL ON METAL DECK. SEE ARCHITECTURAL AND ELECTRICAL DRAWINGS FOR LOCATIONS OF EMBEDDED BOXES.
6. STEEL DECK SHALL BE INSTALLED CONTINUOUS WITH 3 SPANS MINIMUM (U.N.O.) AND SHALL BEAR AT LEAST 2.5" ON STEEL AT STEEL SUPPORTS.
7. DECKING CONTRACTOR SHALL FURNISH AND INSTALL CONTINUOUS CLOSURES AND POUR STOPS AT DECK ENDS, EDGES AND OPENINGS WHERE NO STEEL ANGLE IS SPECIFIED.
8. THE CONTRACTOR SHALL PROVIDE SUPPLEMENTAL FRAMING (L4 X 3 1/2 X 5/16, HSS 2 1/2 X 2 1/2 X ¼) AS NECESSARY FOR THE SUPPORT OF METAL DECK WHERE NOT SHOWN ON DRAWINGS, UNLESS OTHERWISE INDICATED.
9. CONTRACTOR SHALL INCLUDE ALLOWANCE FOR ALL ADDITIONAL CONCRETE, WHICH MAY BE REQUIRED AS A RESULT OF DEFLECTION OF THE FLOOR BEAMS AND DECK DURING PLACEMENT OF CONCRETE.
10. SUPPORTS FOR DECK OPENINGS SHALL BE FABRICATED SO THAT THE DECK RUNS CONTINUOUSLY OVER THE OPENING. DECK SHALL BE CUT FROM THE OPENING IMMEDIATELY PRIOR TO PLACING THE EQUIPMENT OVER THE OPENING OR WALLS AROUND THE SHAFT.
11. COMPOSITE FLOOR DECK SHALL BE WELDED TO SUPPORT USING A ⅝" DIAMETER PUDDLE WELD AND 36\4 PATTERN. COMPOSITE DECK SIDE LAPS SHALL BE LAPPED AND CONSIST OF (3) 1–1/2" SEAM WELDS PER SPAN.

STRUCTURAL STEEL:

1. ALL STRUCTURAL STEEL WIDE FLANGE MEMBERS SHALL CONFORM TO ASTM SPECIFICATION A–992 U.N.O. PLATES, ANGLES, CHANNELS AND BARS SHALL BE A36.
2. TUBES SHALL CONFORM TO ASTM A500 GRADE B. PIPES SHALL CONFORM TO ASTM A–53 TYPE E OR S GRADE B.
3. HIGH STRENGTH STEEL BOLTS SHALL CONFORM TO ASTM A325 OR A490. ANCHOR RODS SHALL CONFORM TO ASTM F–1554 GR. 36.
4. WELDING ELECTRODES SHALL BE E–70XX LOW HYDROGEN.
5. FABRICATORS SPECIALTY ENGINEER REGISTERED IN THE STATE OF MARYLAND, TO DESIGN SHEAR CONNECTIONS TO SUPPORT REACTIONS SHOWN ON DRAWINGS. MOMENT CONNECTIONS TO BE DESIGNED TO FULL MOMENT CAPACITY OF THE BEAM (U.N.O); SEE S–312.

   USE MINIMUM ROWS OF 3/4"Ø BOLTS PER CONNECTION AS PER FOLLOWING TABLE (U.N.O.)

NOMINAL BEAM DEPTH	MINIMUM # OF ROWS
8, 10, 12	2
14, 16, 18	3
21, 24	4
27, 30	5
33, 38	6

6. ALL BUTT WELDS SHALL BE FULL PENETRATION BUTT WELDS.
7. SPLICING OF STRUCTURAL STEEL MEMBERS WHERE NOT DETAILED IS PROHIBITED WITHOUT PRIOR APPROVAL OF THE CONTRACTING OFFICER.
8. FABRICATE AND INSTALL STEEL BEAMS WITH THE NATURAL CAMBER UP.
9. THE FOLLOWING MINIMUM PARAMETERS APPLY TO ALL CONNECTION DESIGN.
   THE MINIMUM PLATE THICKNESS SHALL BE .... 1/2" (U.N.O.)
   THE MINIMUM BOLT DIAMETER SHALL BE .... 3/4" (U.N.O.)
   THE MINIMUM WELD THROAT SHALL BE .... 3/16" (U.N.O.)
10. BASE PLATES, BEAMS, COLUMNS AND HARDWARE EXPOSED TO SOIL SHALL BE COVERED WITH MINIMUM OF 3" CONCRETE PRIOR TO BACKFILL.
11. ALL TEMPORARY ERECTION BRACING AND TIE RODS SHALL REMAIN IN PLACE UNTIL ALL STRUCTURAL MEMBER ARE PROPERLY ALIGNED AND CONNECTED AND SHALL NOT BE REMOVED WITHOUT WRITTEN APPROVAL FROM THE 3RD PARTY INSPECTION AGENCY.
12. THE CONTRACTOR SHALL BE RESPONSIBLE FOR THE CONTROL OF ALL ERECTION PROCEDURES AND SEQUENCES.
13. ANY BOLTED CONNECTION INDICATED ON THE DRAWINGS CAN BE SUBSTITUTED WITH A WELDED ONE (SHOP OR FIELD) OF EQUAL CAPACITY. SUBSTITUTION SHALL BE AT NO EXTRA COST TO THE GOVERNMENT & ONLY AFTER APPROVAL OF THE ENGINEER AND 3RD PARTY INSPECTION AGENCY.
14. LOADS SHOWN ON DRAWINGS ARE FACTORED LRFD LOADS.
15. ALL BOLTED CONN. SHALL BE SNUG TIGHT, UNLESS OTHERWISE NOTED.

STEEL STAIRS AND HANDRAILS:

1. DESIGN OF STEEL STAIRS AND RAILINGS IS THE RESPONSIBILITY OF THE STAIR FABRICATOR. FABRICATOR SHALL RETAIN THE SERVICES OF A PROFESSIONAL ENGINEER, REGISTERED IN THE STATE OF MARYLAND, FOR THE DESIGN OF THE STEEL STAIRS AND ASSOCIATED ELEMENTS. STEEL STAIRS SHALL BE DESIGNED TO SUPPORT A SUPERIMPOSED LIVE LOAD OF 100 PSF AS INDICATED IN THE DESIGN LOADS SECTION OF THE GENERAL NOTES. OTHER STAIR ELEMENTS (RAILINGS, ETC.) SHALL BE DESIGNED IN ACCORDANCE WITH THE APPLICABLE BUILDING CODE AS REFERENCED IN THE MAJOR CODES AND STANDARDS SECTION OF THE GENERAL NOTES.
2. STAIR DRAWINGS AND CALCULATIONS SHALL BE SIGNED AND SEALED BY A PROFESSIONAL ENGINEER, REGISTERED IN THE STATE OF MARYLAND.
3. SEE ARCHITECTURAL DRAWINGS FOR STAIR LOCATIONS, DIMENSIONS, AND DETAILS.
4. REFER TO ASCE 7–05 SECTION 4.4 FOR DESIGN CRITERIA FOR THE DESIGN OF HANDRAILS AND GUARDRAILS.

FOUNDATIONS:

1. FOUNDATION DESIGN IS BASED ON GEOTECHNICAL REPORT PROVIDED BY ECS MID–ATLANTIC, LLC DATED JULY 15, 2011, ENTITLED "REPORT OF SUBSURFACE EXPLORATION, LABORATORY TESTING, AND GEOTECHNICAL ENGINEERING ANALYSES – NASA FLIGHT PROJECTS BUILDING, LANHAM, PRINCE GEORGE'S COUNTY, MARYLAND" (ECS PROJECT NO. 02–5707). NO WARRANTY IS MADE BY THE AUTHORITY HAVING JURISDICTION OR THE STRUCTURAL ENGINEER OF RECORD TO THE COMPLETENESS AND ACCURACY OF THE GEOTECHNICAL EXPLORATION, THE SUBSURFACE INVESTIGATION, OR THE SOIL TEST DATA. THIS REPORT IS MADE A PART OF THE CONTRACT DOCUMENTS BY REFERENCE.
2. VERIFY ALL EXISTING FIELD CONDITIONS THAT MAY AFFECT THE INSTALLATION OF THE FOUNDATION SYSTEM PRIOR TO STARTING WORK.
3. EXTEND BOTTOM OF PERIMETER FOUNDATIONS AND GRADE BEAMS A MINIMUM 2'–6" BELOW GRADE. PROVIDE ALL NECESSARY MEASURES TO PREVENT ANY FROST OR ICE FROM PENETRATION ANY FOUNDATION OR SLAB SUBGRADE BEFORE AND AFTER PLACING OF CONCRETE AND UNTIL SUCH SUBGRADES ARE FULLY PROTECTED BY THE PERMANENT BUILDING STRUCTURE.
4. SHOULD WATER OR FROST ENTER A FOOTING EXCAVATION AFTER SUBGRADE APPROVAL, THE SUBGRADE SHALL BE RE–INSPECTED BY THE GEOTECHNICAL ENGINEER AFTER REMOVAL OF WATER OR FROST.
5. SEE ARCHITECTURAL DRAWINGS FOR ALL WATERPROOFING AND DAMP PROOFING DETAILS.
6. FX.X INDICATES FOOTING TYPES. SEE FOOTING SCHEDULE FOR SIZE AND REINFORCING. SEE FOUNDATION PLANS FOR TOP OF FOOTING ELEVATIONS. FOOTING ELEVATIONS SHOWN REPRESENT THE MINIMUM DEPTH TO WHICH FOOTINGS SHALL BE PLACED. FOOTINGS SHALL BE LOWERED AS REQUIRED TO OBTAIN SUITABLE BEARING. PRIOR TO THE PLACEMENT OF REINFORCEMENT AND CONCRETE FOR FOOTINGS, THE BASES OF FOOTING EXCAVATIONS SHOULD BE OBSERVED, TESTED, AND APPROVED BY A QUALIFIED REPRESENTATIVE OF THE GEOTECHNICAL ENGINEER TO VERIFY THAT SOILS CONDITIONS AT EASH FOOTING LOCATION ARE SUITABLE BEARING PRESSURE. ALL UNSUITABLE FOUNDATION MATERIAL (INCLUDING EXISTING FILL) SHALL BE REMOVED WITH FOOTINGS RESTING ON NATURAL SOILS OR NEW SELECT FILL WITH A MINIMUM BEARING CAPACITY OF 4,000 PSF UNLESS OTHERWISE INDICATED.

LIGHT–GAUGE STEEL FRAMING:

1. MEMBERS SIZES AND THICKNESS SHOWN ON DRAWINGS HAVE BEEN DETERMINED BASED ON THE "CLARK–WESTERN COLD–FORMED STEEL FRAMING SYSTEMS" TECHNICAL INFORMATION CATALOG IN ACCORDANCE WITH THE 2007 NORTH AMERICAN SPECIFICATION (NASPEC) AND THE 2009 INTERNATIONAL BUILDING CODE. THIS INFORMATION IS PROVIDED FOR PRELIMINARY PRICING PURPOSES ONLY.
2. THE ENGINEERING OF ALL COLD–FORMED STEEL FRAMING, INCLUDING THEIR CONNECTIONS AND BRACING, SHALL BE THE RESPONSIBILITY OF THE CONTRACTOR'S SPECIALTY ENGINEER AND SHALL CONFORM TO THE 2007 AISI "SPECIFICATION FOR THE DESIGN OF COLD–FORMED STEEL STRUCTURAL MEMBERS."
3. COLD–FORMED STEEL FRAMING SHALL CONFORM TO ASTM A653 WITH A MINIMUM YIELD STRESS OF 33 KSI.
4. ALL STUDS, TRACKS, BRIDGING AND ACCESSORIES SHALL HAVE A G60 GALVANIZED COATING IN ACCORDANCE WITH ASTM C955.
5. SELF–DRILLING SCREWS (TEK SCREWS) SHALL BE #10–16 HWH SCREWS MANUFACTURED BY HILTI OR AN APPROVED EQUIVALENT, U.N.O. WHERE SCREW CONNECTIONS ARE MADE BETWEEN MEMBERS OF DIFFERING THICKNESSES, THE HIGHER GAGE MATERIAL SHALL BE PENETRATED FIRST. MAINTAIN A MINIMUM ½" EDGE DISTANCE FROM THE EDGE OF THE LIGHT–GAGE MEMBER TO THE CENTERLINE OF THE SCREW. FASTENERS SHALL NOT BE SPACED TO EXCEED THE SPACING OF THE STUDS WHEREVER POSSIBLE.
6. CONNECTION OF TRACK TO CONCRETE SHALL BE MADE WITH POWDER–ACTUATED FASTENERS (PAF) WITH A SHANK DIAMETER OF 0.145" AND A PENETRATION AS SPECIFIED BY THE SPECIALTY ENGINEER. FASTENERS SHALL NOT BE SPACED TO EXCEED THE SPACING OF THE STUDS AND WHEREVER POSSIBLE, FASTENERS SHALL BE LOCATED AT THE STUD LOCATIONS WHEREVER POSSIBLE.
7. CONNECTIONS OF TRACK TO STRUCTURAL STEEL SHALL BE MADE WITH POWDER–ACTUATED FASTENERS (PAF) WITH A SHANK DIAMETER OF 0.145". FASTENERS SHALL BE SPACED NOT TO EXCEED THE SPACING OF THE STUDS.

POST–INSTALLED ANCHORS:

1. ALL MECHANICAL, ADHESIVE, AND EPOXY ANCHORS SHOWN IN THE STRUCTURAL DOCUMENTS SHALL BE MANUFACTURED BY HILTI, POWERS, OR SIMPSON. ANCHOR TECHNICAL INFORMATION SHALL BE SUBMITTED TO THE STRUCTURAL ENGINEER OF RECORD FOR REVIEW AND COMMENT. SUBMITTAL SHALL CONTAIN ALL APPLICABLE TECHNICAL INFORMATION INCLUDING ALLOWABLE LOAD VALUES, MANUFACTURER RECOMMENDED INSTALLATION PROCEDURES, ETC. ANCHORS WERE ASSUMED TO HAVE THE FOLLOWING PROPERTIES U.N.O. ON THE DRAWINGS:
   A. EPOXY ANCHORS – HILTI–RE 500–SD W/ THREADED ROD
      MIN. EMBEDMENT DEPTH = 3–1/2"
      MIN. EDGE DISTANCE = 4"
   B. ADHESIVE ANCHORS – HILTI–HY 150 W/ HAS RODS
      MIN. EMBEDMENT DEPTH = 4–1/4"
      MIN. EDGE DISTANCE = 4"
   C. EXPANSION ANCHORS – HILTI KWIK BOLT TZ
      MIN. EMBEDMENT DEPTH = 4"
      MIN. EDGE DISTANCE = 6"
2. ALL ANCHORS SHALL BE INSTALLED IN ACCORDANCE WITH MANUFACTURER'S SPECIFICATIONS.
3. MECHANICAL ANCHOR TYPE HAS BEEN SELECTED TO CONFORM TO THE REQUIREMENTS OF APPENDIX D OF ACI 318–08. EQUIVALENT ANCHORS SUBMITTED BY THE CONTRACTOR SHALL MEET THE QUALIFICATION REQUIREMENTS OF ACI 355.2 "QUALIFICATION OF POST–INSTALLED MECHANICAL ANCHORS IN CONCRETE."

100% SUBMITTAL

AECOM
AECOM TECHNICAL SERVICES, INC.
3101 WILSON BOULEVARD
SUITE 900
ARLINGTON, VA 22201
T: 703-682-4900 F: 703.682.4901
www.aecom.com

SEAL AREA

STATE OF MARYLAND THOMAS J. GILLARD No. 30204 PROFESSIONAL ENGINEER

KEY PLAN

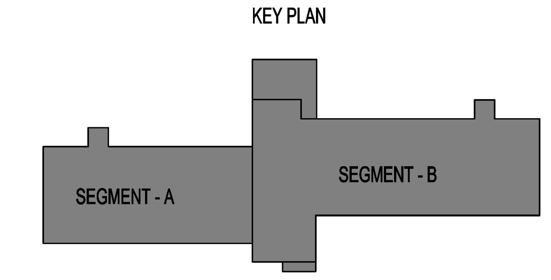

REV	DATE	DESCRIPTION	S&R BR.	CUSTOMER	PM	SECT. HEAD

	INITIALS	DATE
DRAWN BY	MJI	
CHECKED BY	KTB	
A-E MANAGER	EW	
ENVIRONMENTAL BRANCH	JH	
SAFETY BRANCH	CS	
CM	MMD	
PM	RWP	
CUSTOMER	JWB	
ENG. BRANCH	DGL	

STRUCTURAL

STRUCTURAL GENERAL NOTES

S-001

FLIGHT PROJECTS BUILDING

NATIONAL AERONAUTICS AND SPACE ADMINISTRATION

GODDARD SPACE FLIGHT CENTER GREENBELT, MARYLAND
FACILITIES MANAGEMENT DIVISION

DATE ISSUED	CoF CODE OR WR#	AECOM PROJECT NO.	SCALE
10/12/2012	12GXAZ	60187636	

FILE DATE: 10/10/2012 3:39:31 PM

ABBREVIATIONS:

@	AT
(A)	ABOVE
A.A.	ANCHOR BOLT
ABV	ABOVE
ACI	AMERICAN CONCRETE INSTITUTE
ACIP	AUGER CAST-IN-PLACE PILE
ADD	ADDENDUM
ADD'L	ADDITIONAL
ADJ	ADJACENT
AE	ARCHITECTURAL / ENGINEERING FIRM
AFF	ABOVE FINISHED FLOOR
AGGR	AGGREGATE
AHJ	AUTHORITY HAVING JURISDICTION
AISC	AMERICAN INSTITUTE OF STEEL CONSTRUCTION
AISI	AMERICAN IRON & STEEL INSTITUTE
ARCH.	ARCHITECTURAL
ATFP	ANTI-TERRORISM FORCE PROTECTION
AWS	AMERICAN WELDING SOCIETY
(A)	BELOW
B/B	BACK TO BACK
BETW	BETWEEN
BEY	BEYOND
BLDG	BUILDING
BLW	BELOW
BM	BEAM
BOD	BOTTOM OF DECK
BOT	BOTTOM
B.A.	BASE PLATE
BRCG	BRACING
BRG	BEARING
C	CHANNEL
C.I.P	CAST IN PLACE
CJ	CONTROL JOINT
℄, CL	CENTER LINE
CLG	CEILING
CLR	CLEAR
CMU	CONCRETE MASONRY UNIT
COL.	COLUMN
COMP	COMPOSITE
CONC	CONCRETE
CONN	CONNECTION
CONST	CONSTRUCTION
CONT	CONTINUOUS
COORD	COORDINATE
COR	CORNER
CTR	CENTER
DEPR.	DEPRESSION
DET.	DETAIL
DIA	DIAMETER
DIAG	DIAGONAL
DIM.	DIMENSION
DIST	DISTANCE
D.L.	DEAD LOAD
DN	DOWN
DO	DITTO
DWG	DRAWING
DWLS	DOWELS
D.T.	DOUBLE TEES
EA.	EACH
E.F.	EACH FACE
E.J.	EXPANSION JOINT
EL, ELEV	ELEVATION
ELEC	ELECTRICAL
EMBED	EMBEDMENT
EOS	EDGE OF SLAB
EOA	EDGE OF ANGLE
EQ, EQL	EQUAL
EQPT	EQUIPMENT
ETC.	ET CETERA
E.W.	EACH WAY
EXIST	EXISTING
EXP	EXPANSION
EXT	EXTERIOR
FDN	FOUNDATION
FIN.	FINISH
FLR, FL	FLOOR
F.O.B.	FACE OF BUILDING
FR	FRAME
FRMG	FRAMING
F.S.	FAR SIDE
FTG.	FOOTING
F.O.W.	FACE OF WALL
F.O.C.	FACE OF CURB
GA	GAGE
GALV.	GALVANIZED
GB	GRADE BEAM
G.C	GENERAL CONTRACTOR
GOVT.	GOVERNMENT
(H)	HIGH
H	HEIGHT
HDG	HOT-DIP GALVANIZED
HORIZ	HORIZONTAL
H.P.	HIGH POINT
H.S.	HIGH STRENGTH, HEAD STUD
HVAC	HEATING VENTILATION & AIR CONDITIONING
IN.	INCH
INCL	INCLUDING
INFO.	INFORMATION
INT.	INTERIOR
JST.	JOIST
JT	JOINT

K	KIPS
(L)	LOW
L	LENGTH/LOW
LBS, #	POUNDS
LF	LINEAR FEET
LL	LIVE LOAD
LLH	LONG LEG HORIZONTAL
LLV	LONG LEG VERTICAL
LOC	LOCATION
L.P.	LOW POINT
LVL	LEVEL, LEVELING
LW	LINE WEIGHT
M	MOMENT CONNECTION
MAS	MASONRY
MATL	MATERIAL
MAX	MAXIMUM
MECH.	MECHANICAL
MFR, MANUF.	MANUFACTURER
MIN.	MINIMUM
MISC	MISCELLANEOUS
MPH	MILES PER HOUR
N	NORTH
NAVD	NORTH AMERICA VERTICAL DATUM
N/A	NOT APPLICABLE
N.I.C.	NOT IN CONTRACT
NUM.	NUMBER
N.S.	NEAR SIDE
N.T.S.	NOT TO SCALE
Ø	DIAMETER
O.C.	ON CENTER
O.H.	OPPOSITE HAND
OPNG	OPENING
OPP.	OPPOSITE
P	PLATE
PART.	PARTIAL
PJF	PREFORMED JOINT FILLER
PL.	PLATE
PNL	PANEL
PSF	POUNDS PER SQUARE FEET
PSI	POUNDS PER SQUARE INCH
PVMT	PAVEMENT
QTY	QUANTITY
R	RADIUS, RISER, REMAINDER
REF	REFERENCE
REINF	REINFORCING
REQ'D	REQUIRED
RET	RETAINING
REV	REVISION
RM	ROOM
RTU	ROOF TOP UNIT
SCH.	SCHEDULE
SEC.	SECTION, SECURITY
SECT.	SECTION
SHT, SH	SHEET
SIM	SIMILAR
S.J.I.	STEEL JOIST INSTITUTE
SL	SEALANT
S.O.G.	SLAB ON GRADE
S.S.	SPACE
SPEC	SPECIFICATIONS
SQ	SQUARE
SS	STAINLESS STEEL
STD	STANDARD
STIFF.	STIFFENER
ST.	STEEL
S.W.	SHORT WAY
SYMM	SYMMETRICAL
T	THICKNESS, TREAD
T/	TOP OF
T/C, T/CONC.	TOP OF CONCRETE
T/STL, T.S.	TOP OF STEEL
T/BM	TOP OF BEAM
T&B	TOP & BOTTOM
TEMP	TEMPERATURE
TFE	TOP OF FOOTING ELEVATION
THK	THICK
TS	TUBULAR STEEL
TYP.	TYPICAL
U.N.O.	UNLESS OTHERWISE NOTED
VERT	VERTICAL
V.I.F.	VERIFY IN FIELD
W	WIDTH, WIDE FLANGE
W/	WITH
WF	WIDE FLANGE
WL	WORKING LINE
WP, W.P	WORKING POINT, WATERPROOFING
WT	WEIGHT, STRUCTURAL TEE
WWF	WELDED WIRE FABRIC

100% SUBMITTAL

AECOM

AECOM TECHNICAL SERVICES, INC.
3101 WILSON BOULEVARD
SUITE 900
ARLINGTON, VA 22201

T: 703-682-4900 F: 703.682.4901
www.aecom.com

SEAL AREA

STATE OF MARYLAND
THOMAS J. GILLIGAN
No. 30034
PROFESSIONAL ENGINEER

KEY PLAN

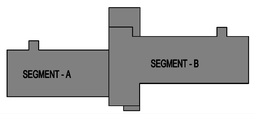

REV	DATE	DESCRIPTION	SAR BR.	CUSTOMER	PM	SECT. HEAD

	INITIALS	DATE
DRAWN BY	MJI	
CHECKED BY	KTB	
A-E MANAGER	EW	
ENVIRONMENTAL BRANCH	JH	
SAFETY BRANCH	CS	
CM	MMD	
PM	RWP	
CUSTOMER	JWB	
ENG. BRANCH	DGL	

STRUCTURAL

STRUCTURAL GENERAL NOTES

S-002

FLIGHT PROJECTS BUILDING

NATIONAL AERONAUTICS AND SPACE ADMINISTRATION

GODDARD SPACE FLIGHT CENTER GREENBELT, MARYLAND
FACILITIES MANAGEMENT DIVISION

DATE ISSUED	CoF CODE OR WR#	AECOM PROJECT NO.	SCALE
10/12/2012	12GXAZ	60187636	

FILE DATE: 10/10/2012 3:38:17 PM

REQUIRED VERIFICATION AND INSPECTION OF STEEL CONSTRUCTION

VERIFICATION AND INSPECTION	CONTINUOUS	PERIODIC	REFERENCED STANDARD	IBC REFERENCE
1. MATERIAL VERIFICATION OF HIGH-STRENGTH BOLTS, NUTS AND WASHERS:				
a. IDENTIFICATION MARKINGS TO CONFORM TO ASTM STANDARDS SPECIFIED IN THE APPROVED CONSTRUCTION DOCUMENTS.	—	X	AISC 360, SECTION A3.3 AND APPLICABLE ASTM MATERIAL STANDARDS	—
b. MANUFACTURER'S CERTIFICATE OF COMPLIANCE REQUIRED.	—	X	—	—
2. INSPECTION OF HIGH-STRENGTH BOLTING:				
a. SNUG-TIGHT JIONTS.	—	X	AISC 360, SECTION M2.5	1704.3.3
b. PRETENSIONED AND SLIP-CRITICAL JOINTS USING TURN-OF-NUT WITH MATCHMARKING, TWIST-OFF BOLT OR DIRECT TENSION INDICATOR METHODS OF INSTALLATION.	—	X		
c. PRETENSIONED AND SLIP-CRITICAL JOINTS USING TURN-OF-NUT WITHOUT MATCHMARKING OR CALIBRATED WRENCH OF INSTALLATION.	X	—		
3. MATERIAL VERIFICATION OF STRUCTURAL STEEL AND COLD-FORMED STEEL DECK:				
a. FOR STRUCTURAL STEEL, IDENTIFICATION MARKINGS TO CONFORM TO AISC 360.	—	X	AISC 360, SECTION M5.5	
b. FOR OTHER STEEL, IDENTIFICATION MARKINGS TO CONFORM TO ASTM STANDARDS SPECIFIED IN THE APPROVED CONSTRUCTION DOCUMENTS.	—	X	APPICABLE ASTM MATERIAL STANDARDS	
c. MANUFACTURER'S CERTIFIED TEST REPORTS.	—	X		
4. MATERIAL VERIFICATION OF WELD FILLER MATERIALS:				
a. IDENTIFICATION MARKINGS TO CONFORM TO AWS SPECIFICATION IN THE APPROVED CONSTRUCTION DOCUMENTS.	—	X	AISC 360, SECTION A3.5 AND APPLICABLE AWS A5 DOCUMENTS	—
b. MANUFACTURER'S CERTIFICATE OF COMPLIANCE REQUIRED.	—	X	—	—
5. INSPECTION OF WELDING:				
a. STRUCTURAL STEEL AND COLD-FORMED STEEL DECK:				
1) COMPLETE AND PARTIAL PENETRATION GROOVE WELDS.	X	—	AWS D1.1	1704.3.1
2) MULTIPASS FILLET WELDS.	X	—		
3) SINGLE-PASS FILLET WELDS >/= 5/16".	X	—		
4) PLUG AND SLOT WELDS.	X	—		
5) SINGLE-PASS FILLET WELDS </= 5/16".	—	X		
6) FLOOR AND DECK WELDS.	—	X	AWS D1.3	
b. REINFORCING STEEL:				
1) VERIFICATION OF WELDABILITY OF REINFORCING STEEL OTHER THAN ASTM A706.	—	X	AWS D1.4; ACI 318: SECTION 3.5.2	—
2) REINFORCING STEEL RESISTING FLEXURAL AND AXIAL FORCES IN INTERMEDIATE AND SPECIAL MOMENT FRAMES, AND BOUNDARY ELEMENTS OF SPECIAL STRUCTURAL WALLS OF CONCRETE AND SHEAR REINFORCEMENT.	X	—		
3) SHEAR REINFORCEMENT.	X	—		
4) OTHER REINFORCING STEEL.	—	X		
6. INSPECTION OF STEEL FRAME JOINT DETAILS FOR COMPLIANCE:				
a. DETAILS SUCH AS BRACING AND STIFFENING.	—	X	—	1704.3.2
b. MEMBER LOCATIONS.	—	X		
c. APPLICATION OF JOINT DETAILS AT EACH CONNECTION.	—	X		

IBC 2009 / TABLE 1704.3 / WHERE APPLICABLE ALSO SEE SECTION 1707.1, SPECIAL SECTION FOR SEISMIC RESISTANCE

REQUIRED VERIFICATION AND INSPECTION OF CONCRETE CONSTRUCTION

VERIFICATION AND INSPECTION	CONTINUOUS	PERIODIC	REFERENCED STANDARD	IBC REFERENCE
1. INSPECTION OF REINFORCING STEEL, INCLUDING PRESTRESSING TENDONS, AND PLACEMENT.	—	X	ACI 318: 3.5, 7.1-7.7	1913.4
2. INSPECTION OF REINFORCING STEEL WELDING IN ACCORDANCE WITH TABLE 1704.3, ITEM 5b.	—	—	AWS D1.4; ACI 318: 3.5.2	—
3. INSPECTION OF BOLTS TO BE INSTALLED IN CONCRETE PRIOR TO AND DURING PLACEMENT OF CONCRETE WHERE ALLOWABLE LOADS HAVE BEEN INCREASED OR WHERE STRENGTH DESIGN IS USED.	X	—	ACI 318: 8.1.3, 21.2.8	1911.5, 1912.1
4. INSPECTION OF ANCHORS INSTALLED IN HARDENED CONCRETE.	—	X	ACI 318: 3.8.6, 8.1.3, 21.2.8	1912.1
5. VERIFYING USE OF REQUIRED DESIGN MIX.	—	X	ACI 318: CH. 4, 5.2-5.4	1904.2.2, 1913.2, 1913.3
6. AT THE TIME FRESH CONCRETE IS SAMPLED TO FABRICATE SPECIMENS FOR STRENGTH TESTS, PERFORM SLUMP AND AIR CONTENT TESTS, AND DETERMINE THE TEMPERATURE OF THE CONCRETE.	X	—	ASTM C172 ASTM C31 ACI 318: 5.6, 5.8	1913.10
7. INSPECTION OF CONCRETE AND SHOTCRETE PLACEMENT FOR PROPER APPLICATION TECHNIQUES.	X	—	ACI 318: 5.9, 5.10	1913.6, 1913.7, 1913.8
8. INSPECTION FOR MAINTENANCE OF SPECIFIED CURING TEMPERATURE AND TECHNIQUES.	—	X	ACI 318: 5.11-5.13	1913.9
9. INSPECTION OF PRESTRESSED CONCRETE:				
a. APPLICATION OF PRESTRESSING FORCES.	—	—	ACI 318: 18.20 ACI 318: 18.18.4	—
b. GROUTING OF BONDED PRESTRESSING TENDONS IN THE SEISMIC-FORCE-RESISTING SYSTEM.	—	—		
10. ERECTION OF PRECAST CONCRETE MEMBERS:	—	X	ACI 318: CH. 16	—
11. VERIFICATION OF IN-SITU CONCRETE STRENGTH, PRIOR TO STRESSING OF TENDONS IN POST-TENSIONED CONCRETE AND PRIOR TO REMOVAL OF SHORES AND FORMS FROM BEAMS AND STRUCTURAL SLABS.	—	X	ACI 318: 6.2	—
12. INSPECT FORMWORK FOR SHAPE, LOCATION, AND DIMENSIONS OF THE CONCRETE MEMBER BEING FORMED	—	X	ACI 318: 6.1.1	—

IBC 2009 / TABLE 1704.4 / WHERE APPLICABLE ALSO SEE SECTION 1707.1

REQUIRED VERIFICATION AND INSPECTION OF SOILS

VERIFICATION AND INSPECTION	CONTINUOUS	PERIODIC	REFERENCED STANDARD	IBC REFERENCE
1. VERIFY MATERIALS BELOW SHALLOW FOUNDATIONS ARE ADEQUATE TO ACHIEVE THE DESIGN BEARING CAPACITY.	—	X	—	—
2. VERIFY EXCAVATIONS ARE EXTENDED TO PROPER DEPTH AND HAVE REACHED PROPER MATERIAL.	—	X	—	—
3. PERFORM CLASSIFICATION AND TESTING OF COMPACTED FILL MATERIALS.	—	X	—	—
4. VERIFY USE OF PROPER MATERIALS, DENSITIES AND LIFT THICKNESSES DURING PLACEMENT AND COMPACTION OF COMPACTED FILL.	X	—	—	—
5. PRIOR TO PLACEMENT OF CONTROLLED FILL, OBSERVE SUBGRADE AND VERIFY THAT SITE HAS BEEN PREPARED PROPERLY.	—	X	—	—

IBC 2009 / TABLE 1704.7

LEVEL 1 SPECIAL INSPECTION - MASONRY CONSTRUCTION

VERIFICATION AND INSPECTION	FREQUENCY OF INSPECTION		REFERENCE FOR CRITERIA		
	CONTINUOUS	PERIODICALLY	IBC SECTION	TMS 402 / ACI 530 / ASCE 5	TMS 602 / ACI 530.1 / ASCE 6
1. COMPLIANCE WITH REQUIRED INSPECTION PROVISIONS OF THE CONSTRUCTION DOCUMENTS AND THE APPROVED SUBMITTALS SHALL BE VERIFIED.	—	X	—	—	ART. 1.5
2. VERIFICATION OF f'm AND f'AAC PRIOR TO CONSTRUCTION EXCEPT WHERE SPECIFICALLY EXEMPTED BY THIS CODE.	—	X	—	—	ART. 1.4B
3. VERIFICATION OF SLUMP FLOW AND VSI AS DELIVERED TO THE SITE FOR SELF-CONSOLIDATING GROUT.	X	—	—	—	ART. 1.5B.1.b.3
4. AS MASONRY CONSTRUCTION BEGINS, THE FOLLOWING SHALL BE VERIFIED TO ENSURE COMPLIANCE:					
a. PROPORTIONS OF SITE-PREPARED MORTAR.	—	X	—	—	ART. 2.6A
b. CONSTRUCTION OF MORTAR JOINTS.	—	X	—	—	ART. 3.3B
c. LOCATION OF REINFORCEMENT, CONNECTORS, PRESTRESSING TENDONS, AND ANCHORAGES.	—	X	—	—	ART. 3.4, 3.6A
d. PRESTRESSING TECHNIQUE	—	X	—	—	ART. 3.6B
e. GRADE AND SIZE OF PRESTRESSING TENDONS AND ANCHORAGES.	—	X	—	—	ART. 2.4B, 2.4H
5. DURING CONSTRUCTION THE INSPECTION PROGRAM SHALL VERIFY:					
a. SIZE AND LOCATION OF STRUCTURAL ELEMENTS.	—	X	—	—	ART. 3.3F
b. TYPE, SIZE, AND LOCATION OF ANCHORS, INCLUDING OTHER DETAILS OF ANCHORAGE OF MASONRY TO STRUCTURAL MEMBERS, FRAMES OR OTHER CONSTRUCTION.	—	X	—	SEC. 1.2.2(e), 1.16.1	—
c. SPECIFIED SIZE, GRADE AND TYPE OF REINFORCEMENT, ANCHOR BOLTS, PRESTRESSING TENDONS AND ANCHORAGES.	—	X	—	SEC. 1.15	ART. 2.4, 3.4
d. WELDING OF REINFORCING BARS.	X	—	—	SEC. 2.1.9.7.2, 3.3.3.4(b)	—
e. PREPARATION, CONSTRUCTION AND PROTECTION OF MASONRY DURING COLD WEATHER (TEMPERATUTRE BELOW 40°F) OR HOT WEATHER (TEMPERATURE ABOVE 90°F)	—	X	SEC. 2104.3, 2101.4	—	ART. 1.8C, 1.8D
f. APPLICATION AND MEASUREMENT OF PRESTRESSING FORCE	X	—	—	—	ART. 3.6B
6. PRIOR TO GROUTING, THE FOLLOWING SHALL BE VERIFIED TO ENSURE COMPLIANCE:					
a. GROUT SPACE IS CLEAN.	—	X	—	—	ART. 3.2D
b. PLACEMENT OF REINFORCEMENT AND CONNECTORS AND PRESTRESSING TENDONS AND ANCHORAGES.	—	X	—	SEC. 1.13	ART. 3.4
c. PROPORTIONS OF SITE-PREPARED GROUT AND PRESTRESSING GROUT FOR BONDED TENDONS.	—	X	—	—	ART. 2.6B
d. CONSTRUCTION OF MORTAR JOINTS.	—	X	—	—	ART. 3.3B
7. GROUT PLACEMENT SHALL BE VERIFIED TO ENSURE COMPLIANCE:	X	—	—	—	ART. 3.5
a. GROUTING OF PRESTRESSING BONDED TENDONS	X	—	—	—	ART. 3.6C
8. PREPARATION OF ANY REQUIRED GROUT SPECIMENS, MORTAR SPECIMENS AND/OR PRISMS SHALL BE OBSERVED	—	X	SEC. 2105.2.2, 2105.3	—	ART. 1.4

IBC 2009 / TABLE 1704.5.1/ WHERE APPLICABLE ALSO SEE SPECIFIC STANDARDS REFERENCED IN CHAPTER 35

100% SUBMITTAL

AECOM

AECOM TECHNICAL SERVICES, INC.
3101 WILSON BOULEVARD
SUITE 900
ARLINGTON, VA 22201

T: 703-682-4900 F: 703.682.4901
www.aecom.com

SEAL AREA

STATE OF MARYLAND
THOMAS J. GILLIGAN
No. 36028
PROFESSIONAL ENGINEER

KEY PLAN

REV	DATE	DESCRIPTION	S&R BR.	CUSTOMER	PM	SECT. HEAD

	INITIALS	DATE
DRAWN BY	MJI	
CHECKED BY	KTB	
A-E MANAGER	EW	
ENVIRONMENTAL BRANCH	JH	
SAFETY BRANCH	CS	
CM	MMD	
PM	RWP	
CUSTOMER	JWB	
ENG. BRANCH	DGL	

Structural General Notes - Special Inspections

S-003

FLIGHT PROJECTS BUILDING

NATIONAL AERONAUTICS AND SPACE ADMINISTRATION

GODDARD SPACE FLIGHT CENTER GREENBELT, MARYLAND
FACILITIES MANAGEMENT DIVISION

DATE ISSUED	CoF CODE OR WRF	AECOM PROJECT NO.	SCALE
10/12/2012	12GXAZ	60187636	

FILE DATE: 10/10/2012 3:24:38 PM

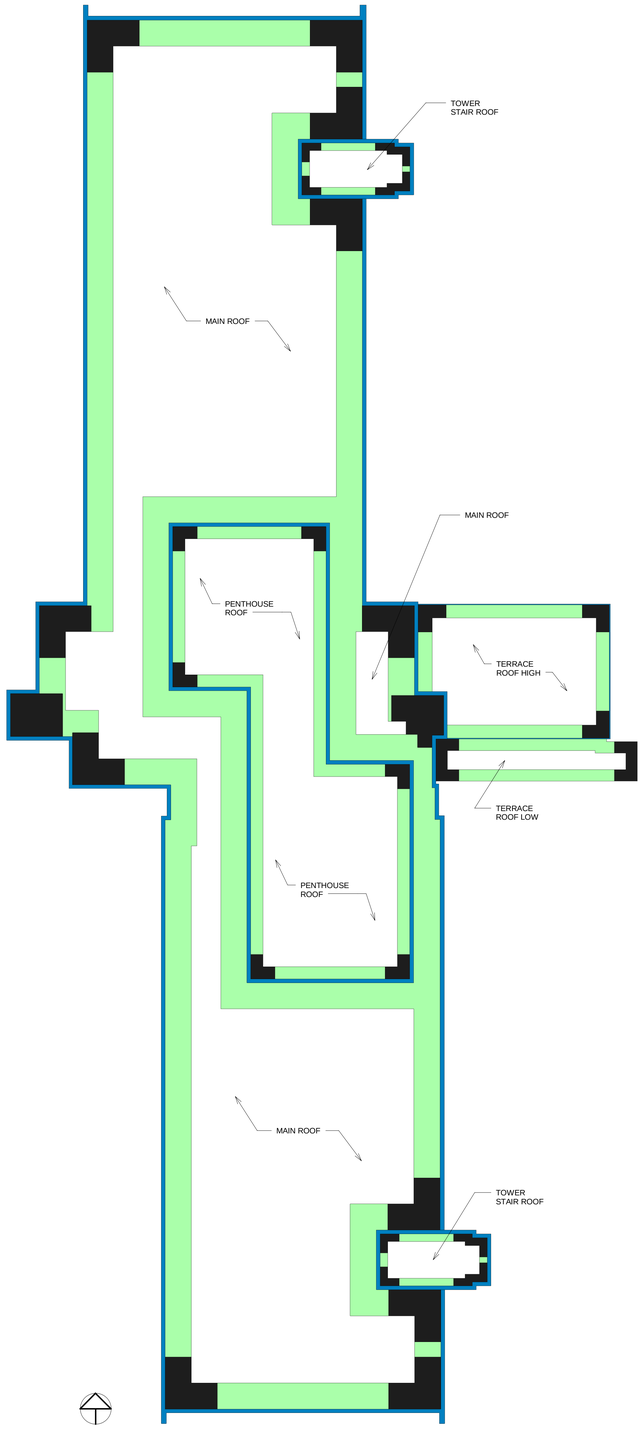

5 Components and Cladding (Roof Plan View)
S-004 REF. SCALE: NTS

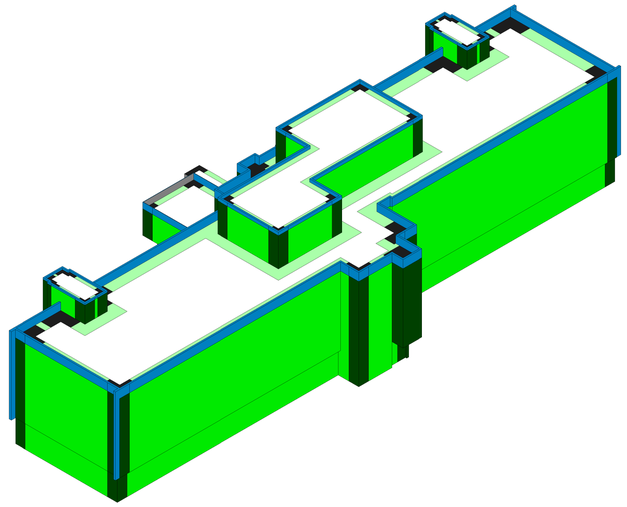

4 Components and Cladding (Iso View From NW)
S-004 REF. SCALE: NTS

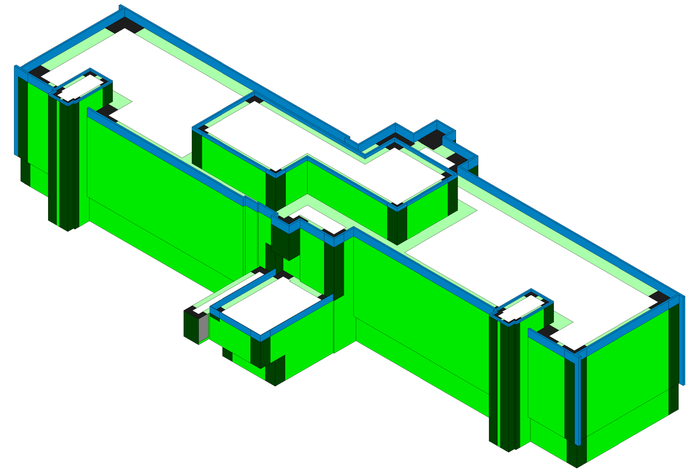

2 Components and Cladding (Iso View From NE)
S-004 REF. SCALE: NTS

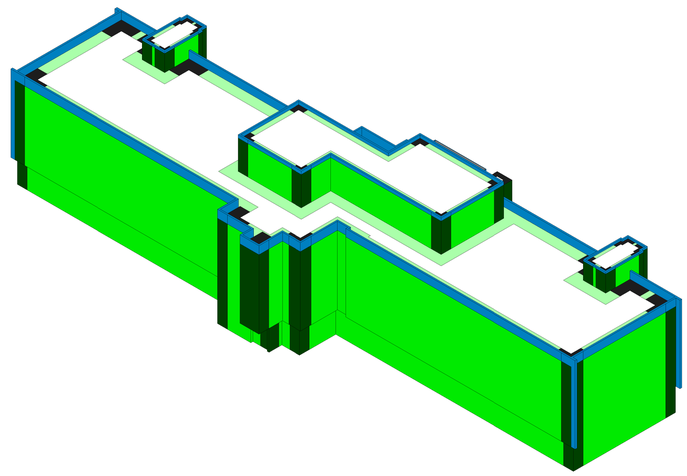

3 Components and Cladding (Iso View From SW)
S-004 REF. SCALE: NTS

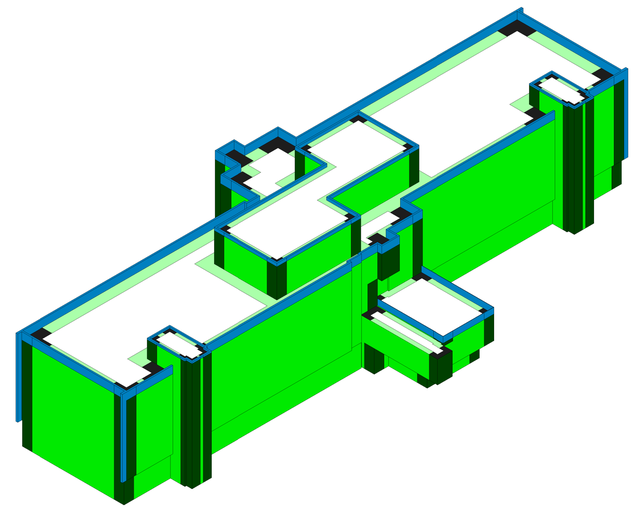

1 Components and Cladding (Iso View From SE)
S-004 REF. SCALE: NTS

COMPONETS AND CLADDING - SURFACE PRESSURE (psf)					
AREA	**10 SF**	**50 SF**	**100 SF**	**200 FS**	**500 SF**
ROOF:					
- NEGATIVE ZONE 1	-25.8	-22.5	-21.0	-19.6	-17.6
- NEGATIVE ZONE 2	-40.5	-35.8	-33.8	-31.8	-29.1
- NEGATIVE ZONE 3	-55.2	-49.2	-46.6	-44.0	-40.5
- POSITIVE ZONES 4 & 5	10.0	10.0	10.0	10.0	10.0
PARAPET:					
- CASE A: INTERIOR ZONE	52.5	46.4	43.3	40.2	36.1
- CASE A: CORNER ZONE	67.2	59.8	56.1	52.4	47.6
- CASE B: INTERIOR ZONE	-29.5	-27.2	-25.4	-23.7	-21.3
- CASE B: CORNER ZONE	-44.3	-39.1	-35.3	-31.4	-26.2
WALLS					
- NEGATIVE ZONE 4	-17.6	-16.7	-16.0	-15.3	-14.4
- NEGATIVE ZONE 5	-32.4	-28.6	-25.8	-23.0	-19.3
- POSITIVE PRESSURE :					
+ h = 0ft TO 15ft	14.1	13.0	12.2	11.4	10.4
+ h = 20.0ft	14.1	13.0	12.2	11.4	10.4
+ h = 25ft	14.1	13.0	12.2	11.4	10.4
+ h = 30ft	14.1	13.0	12.2	11.4	10.4
+ h = 40ft	15.0	13.9	13.0	12.1	11.0
+ h = 50ft	15.8	14.6	13.7	12.7	11.5
+ h = 60ft	16.5	15.2	14.2	13.3	12.0
+ h = 70ft	17.1	15.8	14.7	13.7	12.4
+ h = 80ft	17.6	16.3	15.2	14.1	12.7

COMPONENTS AND CLADDING WIND ZONES (PER ASCE 7-05)

- ROOF ZONE 1
- ROOF ZONE 2
- ROOF ZONE 3
- WALL ZONE 4
- WALL ZONE 5
- PARAPET

CASE A = PRESSURE TOWARDS BUILDING
CASE B = PRESSURE AWAY FROM BUILDING

NOTE:
SEE NOTE 4 UNDER DESIGN LOADS ON S-001

100% SUBMITTAL

AECOM

AECOM TECHNICAL SERVICES, INC.
3101 WILSON BOULEVARD
SUITE 900
ARLINGTON, VA 22201

T: 703-682-4900 F: 703.682.4901
www.aecom.com

SEAL AREA

STATE OF MARYLAND
THOMAS J. GALLAGHER
No. 34928A
PROFESSIONAL ENGINEER

KEY PLAN

REV	DATE	DESCRIPTION	S&R BR.	CUSTOMER	PM	SECT. HEAD

	INITIALS	DATE
DRAWN BY	MJI	
CHECKED BY	KTB	
A-E MANAGER	EW	
ENVIRONMENTAL BRANCH	JH	
SAFETY BRANCH	CS	
CM	MMD	
PM	RWP	
CUSTOMER	JWB	
ENG. BRANCH	DGL	

Structural General Notes - Components and Cladding

S-004

FLIGHT PROJECTS BUILDING

NATIONAL AERONAUTICS AND SPACE ADMINISTRATION
GODDARD SPACE FLIGHT CENTER GREENBELT, MARYLAND
FACILITIES MANAGEMENT DIVISION

DATE ISSUED	CoF CODE OR WR#	AECOM PROJECT NO.	SCALE
10/12/2012	12GXAZ	60187636	1/2" = 1'-0"

FILE DATE: 10/10/2012 3:25:01 PM

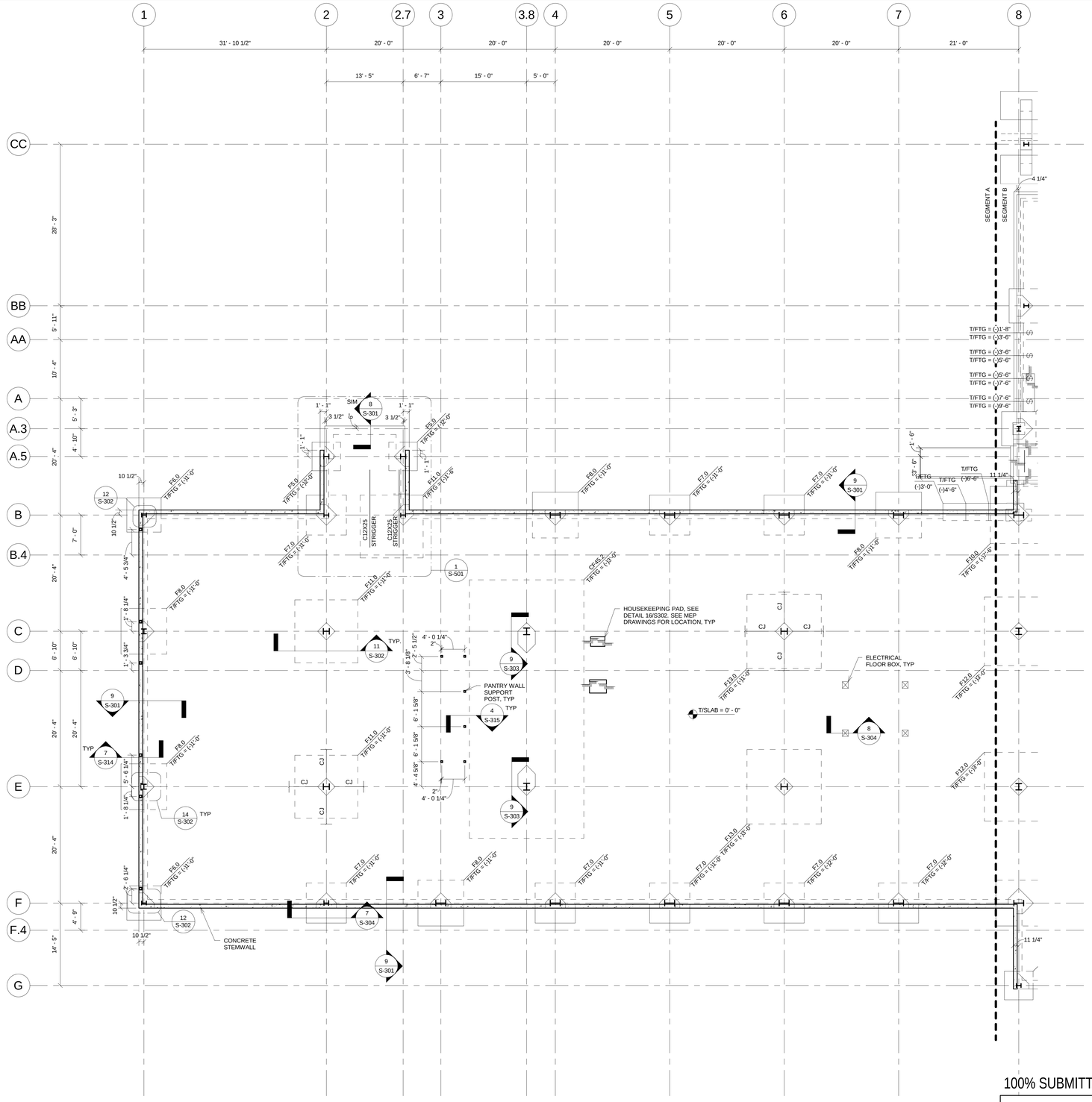

100% SUBMITTAL

1 FOUNDATION PLAN - SEGMENT A

S-101a REF. S-201 SCALE: 1/8" = 1'-0"

FOUNDATION NOTES

1. T/SLAB = 0'-0" U.N.O. ELEVATION IS EQUIVALENT TO GLOBAL ELEVATION 195'- 0" BASED ON NAVD 1988 VERTICAL DATUM. ALL OTHER ELEVATIONS INDICATED IN THE DRAWINGS ARE RELATIVE TO THE 0'-0" ELEVATION.
2. SLAB-ON-GRADE SHALL BE 5" THICK CONCRETE REINFORCED WITH 6x6-W2.1xW2.1 ON 4" MIN. GRANULAR SUBBASE. SLAB SHALL BE PLACED DIRECTLY ON VAPOR RETARDER (10 MIL MIN. THICKNESS).
3. PROVIDE CONTROL JOINTS AND CONSTRUCTION JOINTS AS INDICATED IN PLAN AND AS DETAILED ON S-301. MAXIMUM CONTROL JOINT SPACING SHALL BE LIMITED TO 15'-0" U.N.O.
4. 'CJ' INDICATES CONTROL JOINTS. CONSTRUCTION JOINTS MAY BE SUBSTITUTED FOR CONTROL JOINTS AT THE CONTRACTOR'S DISCRETION.
5. T/FTG ELEVATION FOR INTERIOR FOOTINGS SHALL BE (-) 1'-0" U.N.O. T/FTG ELEVATION FOR FOOTINGS AT BUILDING PERIMTER SHALL BE (-) 2'-0" U.N.O.
6. REFERENCE C-105 FOR LOCATION OF EXISTING BURIED CHILLED WATER LINES NEAR GRIDLINE 13. LINES SHALL BE REMOVED BELOW THE BUILDING FOOTPRINT AND A MINIMUM OF 6'-0" BEYOND THE FACE OF THE BUILDING FACE PRIOR TO FOUNDATION INSTALLATION.
7. WHERE INTERIOR THICKENED FOOTINGS ADJOIN EXTERIOR FOOTINGS, DROP BOTTOM OF INTERIOR FOOTING TO MATCH EXTERIOR. SLOPE BOTTOM OF FOOTING AT 2 HORIZ. TO 1 VERT.
8. ———(-)———(-) INDICATES FOOTING STEP. REF DETAIL 14/S-303
9. SEE COLUMN SCHEDULE FOR PIERS AT FOOTINGS.
10. CONTRACTOR SHALL LOCATE ALL UNDERGROUND UTILITIES IN VICINITY OF FOUNDATIONS AND DETERMINE IF A CONFLICT EXISTS. CONTRACTOR SHALL ALSO PROVIDE INFORMATION ON LOCATION, SIZE AND ELEVATION OF UTILITIES PRIOR TO START OF WORK SO THAT ANY NECESSARY CHANGES CAN BE MADE WITHOUT DELAYING THE PROJECT SCHEDULE.
11. COORDINATE CONTROL JOINT LOCATIONS WITH JOINTS IN FLOOR FINISHES. SEE SHEET A-921.

Isloated Foundation Schedule

Type Mark	Length	Width	Thickness	Comments
CF45.2	45' - 2"	20' - 0"	4' - 3"	(58) #8, T&B SHORT, (29) #8, T&B LONG
F5.0	5' - 0"	5' - 0"	1' - 6"	(6) #6 EW, BOT
F6.0	6' - 0"	6' - 0"	1' - 6"	(6) #6 EW, BOT
F7.0	7' - 0"	7' - 0"	1' - 6"	(7) #6 EW, BOT
F8.0	8' - 0"	8' - 0"	1' - 9"	(9) #6 EW, BOT
F9.X	9' - 0"	5' - 0"	1' - 9"	(10) #6 SHORT, BOT; (6) #6 LONG, BOT
F10.0	10' - 0"	10' - 0"	2' - 0"	(11) #6 EW, BOT
F11.0	11' - 0"	11' - 0"	2' - 3"	(10) #8 EW, BOT
F12.0	12' - 0"	12' - 0"	2' - 9"	(11) #8 EW, BOT
F13.0	13' - 0"	13' - 0"	2' - 9"	(12) #8 EW, BOT
F14.0	14' - 0"	14' - 0"	3' - 0"	(12) #9 EW, BOT

NORTH

AECOM

AECOM TECHNICAL SERVICES, INC.
3101 WILSON BOULEVARD
SUITE 900
ARLINGTON, VA 22201

T: 703-682-4900 F: 703.682.4901
www.aecom.com

SEAL AREA

STATE OF MARYLAND
THOMAS J. GILLARD
No. 30294
PROFESSIONAL ENGINEER

KEY PLAN

SEGMENT - A

REV	DATE	DESCRIPTION	S&R BR.	CUSTOMER	PM	SECT. HEAD

	INITIALS	DATE
DRAWN BY	MJI	
CHECKED BY	KTB	
A-E MANAGER	EW	
ENVIRONMENTAL BRANCH	JH	
SAFETY BRANCH	CS	
CM	MMD	
PM	RWP	
CUSTOMER	JWB	
ENG. BRANCH	DGL	

Foundation Plan - Segment A

S-101a

FLIGHT PROJECTS BUILDING

NATIONAL AERONAUTICS AND SPACE ADMINISTRATION

GODDARD SPACE FLIGHT CENTER GREENBELT, MARYLAND
FACILITIES MANAGEMENT DIVISION

DATE ISSUED	CoF CODE OR WR#	AECOM PROJECT NO.	SCALE
10/12/2012	12GXAZ	60187636	1/8" = 1'-0"

FILE DATE: 10/10/2012 3:25:03 PM

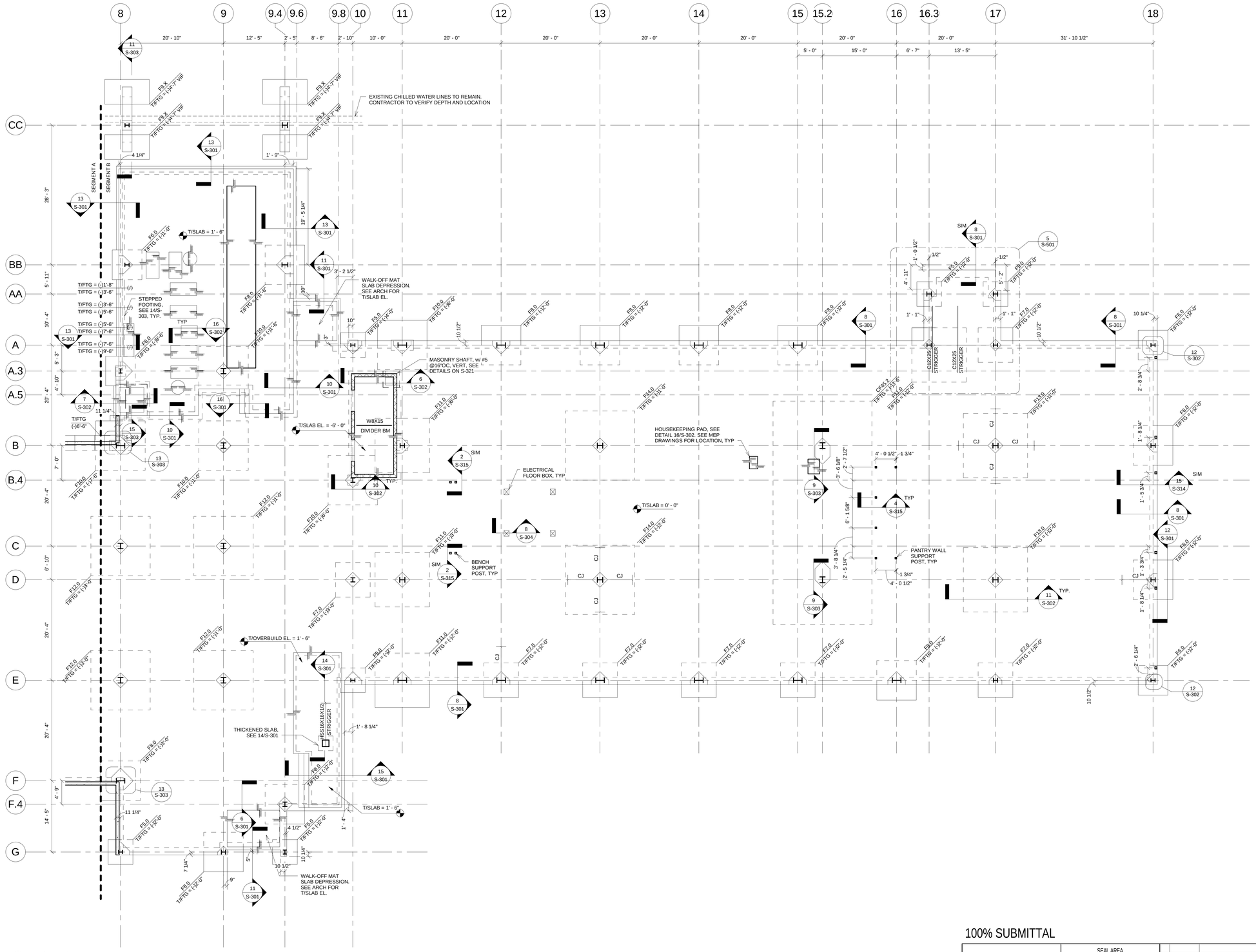

1 FOUNDATION PLAN - SEGMENT B

S-101b | REF. S-201 SCALE: 1/8" = 1'-0"

FOUNDATION NOTES

1. T/SLAB = 0'-0" U.N.O. ELEVATION IS EQUIVALENT TO GLOBAL ELEVATION 195'- 0" BASED NAVD 1988 VERTICAL DATUM. ALL OTHER ELEVATIONS INDICATED IN THE DRAWINGS ARE RELATIVE TO THE 0'-0" ELEVATION.
2. SLAB-ON-GRADE SHALL BE 5" THICK CONCRETE REINFORCED WITH 6x6-W2.1xW2.1 ON 4" MIN. GRANULAR SUBBASE. SLAB SHALL BE PLACED DIRECTLY ON VAPOR RETARDER (10 MIL MIN. THICKNESS).
3. PROVIDE CONTROL JOINTS AND CONSTRUCTION JOINTS AS INDICATED IN PLAN AND AS DETAILED ON S-301. MAXIMUM CONTROL JOINT SPACING SHALL BE LIMITED TO 15'-0" U.N.O.
4. 'CJ' INDICATES CONTROL JOINTS. CONSTRUCTION JOINTS MAY BE SUBSTITUTED FOR CONTROL JOINTS AT THE CONTRACTOR'S DISCRETION.
5. T/FTG ELEVATION FOR INTERIOR FOOTINGS SHALL BE (-) 1'-0" U.N.O. T/FTG ELEVATION FOR FOOTINGS AT BUILDING PERIMTER SHALL BE (-) 2'-0" U.N.O.
6. REFERENCE C-105 FOR LOCATION OF EXISTING BURIED CHILLED WATER LINES NEAR GRIDLINE 13. LINES SHALL BE REMOVED BELOW THE BUILDING FOOTPRINT AND A MINIMUM OF 6'-0" BEYOND THE FACE OF THE BUILDING FACE PRIOR TO FOUNDATION INSTALLATION.
7. WHERE INTERIOR THICKENED FOOTINGS ADJOIN EXTERIOR FOOTINGS, DROP BOTTOM OF INTERIOR FOOTING TO MATCH EXTERIOR. SLOPE BOTTOM OF FOOTING AT 2 HORIZ. TOVERT.
8. ———————(#) INDICATES FOOTING STEP. REF DETAIL 14/S-303
9. SEE COLUMN SCHEDULE FOR PIERS AT FOOTINGS.
10. CONTRACTOR SHALL LOCATE ALL UNDERGROUND UTILITIES IN VICINITY OF FOUNDATIONS AND DETERMINE IF A CONFLICT EXISTS. CONTRACTOR SHALL ALSO PROVIDE INFORMATION ON LOCATION, SIZE AND ELEVATION OF UTILITIES PRIOR TO START OF WORK SO THAT ANY NECESSARY CHANGES CAN BE MADE WITHOUT DELAYING THE PROJECT SCHEDULE.
11. COORDINATE CONTROL JOINT LOCATIONS WITH JOINTS IN FLOOR FINISHES. SEE SHEET A-921.

Isloated Foundation Schedule

Type Mark	Length	Width	Thickness	Comments
CF45.2	45' - 2"	20' - 0"	4' - 3"	(58) #8, T&B SHORT, (29) #8, T&B LONG
F5.0	5' - 0"	5' - 0"	1' - 6"	(6) #6 EW, BOT
F6.0	6' - 0"	6' - 0"	1' - 6"	(6) #6 EW, BOT
F7.0	7' - 0"	7' - 0"	1' - 6"	(7) #6 EW, BOT
F8.0	8' - 0"	8' - 0"	1' - 9"	(9) #6 EW, BOT
F9.X	9' - 0"	5' - 0"	1' - 9"	(10) #6 SHORT, BOT; (6) #6 LONG, BOT
F10.0	10' - 0"	10' - 0"	2' - 0"	(11) #6 EW, BOT
F11.0	11' - 0"	11' - 0"	2' - 3"	(10) #8 EW, BOT
F12.0	12' - 0"	12' - 0"	2' - 9"	(11) #8 EW, BOT
F13.0	13' - 0"	13' - 0"	2' - 9"	(12) #8 EW, BOT
F14.0	14' - 0"	14' - 0"	3' - 0"	(12) #9 EW, BOT

NORTH

1/8"=1'-0" 8' 4' 0 8' 16'

100% SUBMITTAL

AECOM
AECOM TECHNICAL SERVICES, INC.
3101 WILSON BOULEVARD
SUITE 900
ARLINGTON, VA 22201
T: 703-682-4900 F: 703.682.4901
www.aecom.com

SEAL AREA

STATE OF MARYLAND THOMAS J. GILLIGAN No. 36278 PROFESSIONAL ENGINEER

KEY PLAN

SEGMENT - B

REV	DATE	DESCRIPTION	S&R BR.	CUSTOMER	PM	SECT. HEAD

	INITIALS	DATE
DRAWN BY	MJI	
CHECKED BY	KTB	
A-E MANAGER	EW	
ENVIRONMENTAL BRANCH	JH	
SAFETY BRANCH	CS	
CM	MMD	
PM	RWP	
CUSTOMER	JWB	
ENG. BRANCH	DGL	

Foundation Plan - Segment B

S-101b

FLIGHT PROJECTS BUILDING

NATIONAL AERONAUTICS AND SPACE ADMINISTRATION

GODDARD SPACE FLIGHT CENTER GREENBELT, MARYLAND
FACILITIES MANAGEMENT DIVISION

DATE ISSUED	CoF CODE OR WRF	AECOM PROJECT NO.	SCALE
10/12/2012	12GXAZ	60187636	1/8" = 1'-0"

FILE DATE: 10/10/2012 3:25:05 PM

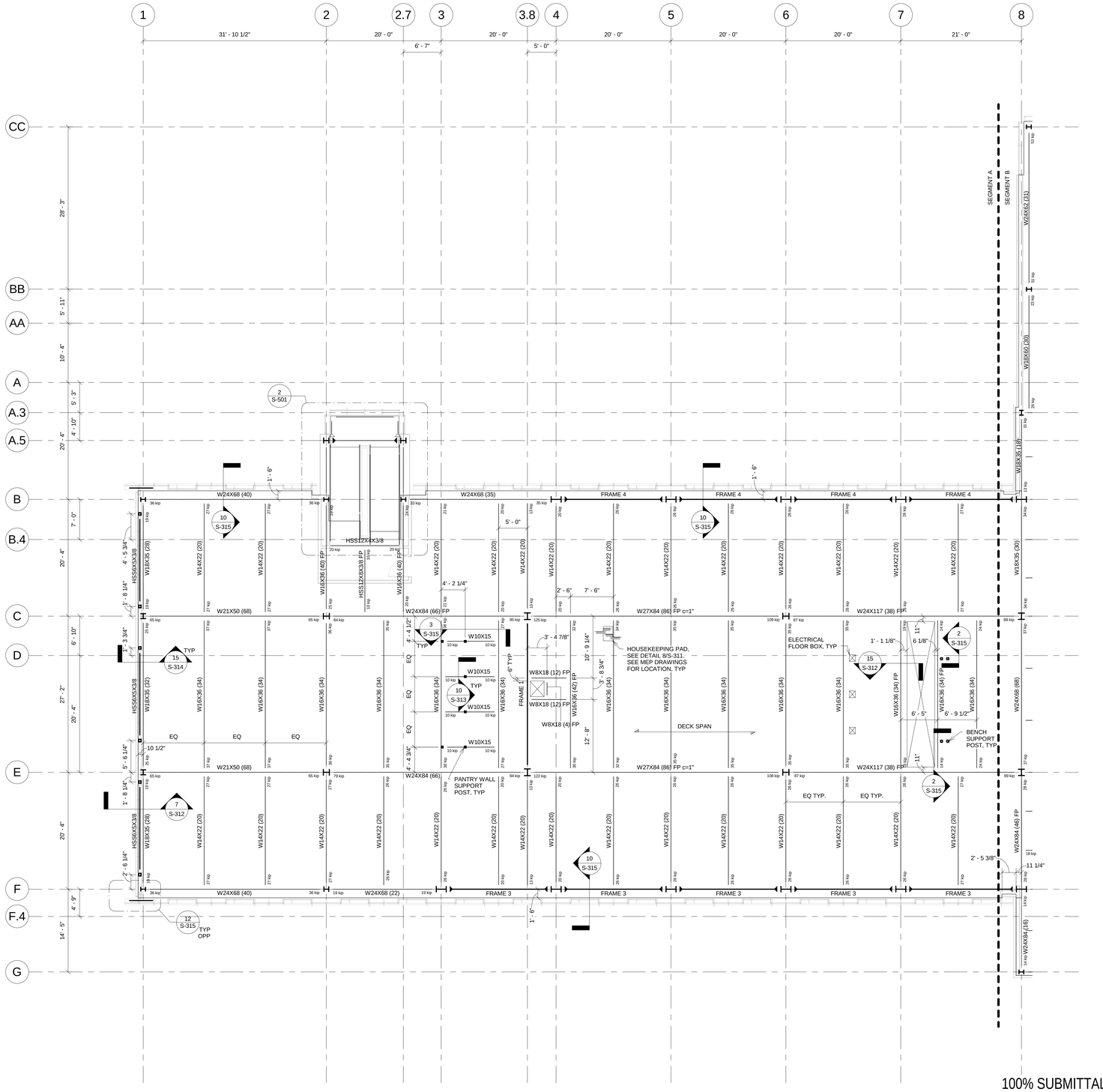

1 LEVEL 2 FRAMING PLAN - SEGMENT A

S-102a | REF. S-201 SCALE: 1/8" = 1'-0"

SHEET NOTES

1. DECK IS 3-1/4" LIGHTWEIGHT CONCRETE ON 3", 20 GAGE, COMPOSITE METAL DECK (6-1/4" TOTAL THICKNESS). 3 SPANS MINIMUM. REINFORCE WITH 6x6-W2.0XW2.0 WWF, TYP.
2. T/STEEL = 15'-5 3/4" U.N.O.
3. ALL SHEAR STUDS ARE TO BE 5-3/8" TALL UNLESS NOTED OTHERWISE.
4. EDGE OF SLAB AT ALL INTERIOR OPENINGS IS TO BE 6" BEYOND BEAM CENTERLINE, U.N.O.
5. SEE SHEET S-201 FOR FRAME ELEVATIONS.
6. PROVIDE A MINIMUM OF (1) STUD PER FOOT FOR ALL SPANS WHERE STUDS ARE NOT INDICATED.
7. PROVIDE FIREPROOFING FOR STRUCTURAL MEMBERS INDICATED WITH "FP" DESIGNATION. SEE FIRE PROTECTION NOTE 25 ON G-002 FOR ADDITIONAL INFORMATION.

100% SUBMITTAL

NORTH

SYMBOL LEGEND

- FRAME MOMENT CONNECTION
- CANTILEVER MOMENT CONNECTION

1/8"=1'-0" 8' 4' 0 8' 16'

AECOM

AECOM TECHNICAL SERVICES, INC.
3101 WILSON BOULEVARD
SUITE 900
ARLINGTON, VA 22201

T: 703-682-4900 F: 703.682.4901
www.aecom.com

SEAL AREA

STATE OF MARYLAND
THOMAS J. GILLASPIE
No. 30294
PROFESSIONAL ENGINEER

KEY PLAN

SEGMENT - A

REV	DATE	DESCRIPTION	S&R BR.	CUSTOMER	PM	SECT. HEAD

	INITIALS	DATE
DRAWN BY	MJI	
CHECKED BY	KTB	
A-E MANAGER	EW	
ENVIRONMENTAL BRANCH	JH	
SAFETY BRANCH	CS	
CM	MMD	
PM	RWP	
CUSTOMER	JWB	
ENG. BRANCH	DGL	

Level 2 Framing Plan - Segment A

S-102a

FLIGHT PROJECTS BUILDING

NATIONAL AERONAUTICS AND SPACE ADMINISTRATION

GODDARD SPACE FLIGHT CENTER GREENBELT, MARYLAND
FACILITIES MANAGEMENT DIVISION

DATE ISSUED	CoF CODE OR WR#	AECOM PROJECT NO.	SCALE
10/12/2012	12GXAZ	60187636	1/8" = 1'-0"

FILE DATE: 10/10/2012 3:25:09 PM

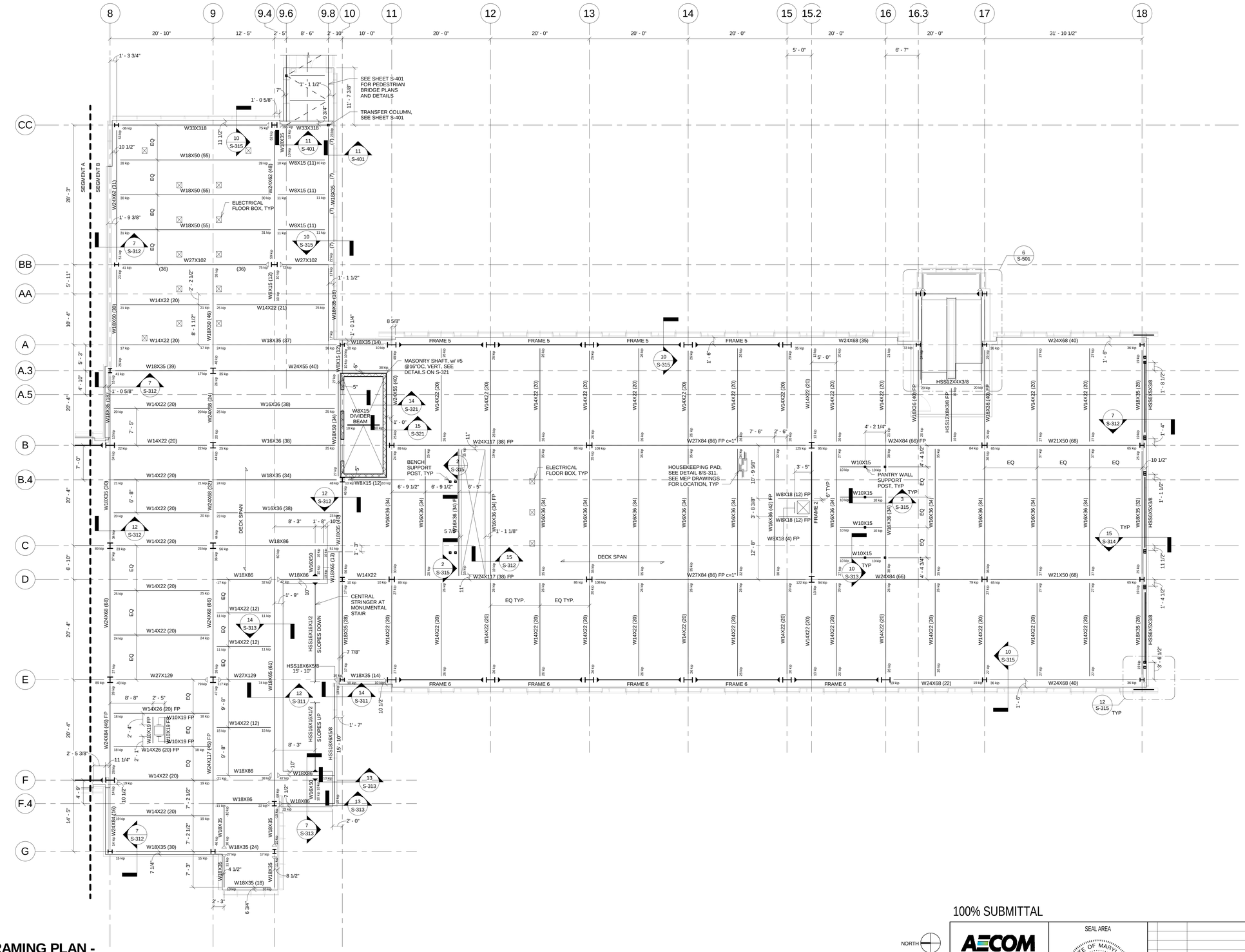

1 LEVEL 2 FRAMING PLAN - SEGMENT B

S-102b REF. S-201 SCALE: 1/8" = 1'-0"

100% SUBMITTAL

NORTH

SYMBOL LEGEND

- FRAME MOMENT CONNECTION
- CANTILEVER MOMENT CONNECTION

1/8"=1'-0" 8' 4' 0 8' 16'

SHEET NOTES

1. DECK IS 3-1/4" LIGHTWEIGHT CONCRETE ON 3", 20 GAGE, COMPOSITE METAL DECK (6-1/4" TOTAL THICKNESS). 3 SPANS MINIMUM. REINFORCE WITH 6x6-W2.0XW2.0 WWF, TYP.
2. T/STEEL = 15'-5 3/4" U.N.O.
3. ALL SHEAR STUDS ARE TO BE 5-3/8" TALL UNLESS NOTED OTHERWISE.
4. EDGE OF SLAB AT ALL INTERIOR OPENINGS IS TO BE 6" BEYOND BEAM CENTERLINE, U.N.O.
5. SEE SHEET S-201 FOR FRAME ELEVATIONS.
6. PROVIDE A MINIMUM OF (1) STUD PER FOOT FOR ALL SPANS WHERE STUDS ARE NOT INDICATED.
7. PROVIDE FIREPROOFING FOR STRUCTURAL MEMBERS INDICATED WITH "FP" DESIGNATION. SEE FIRE PROTECTION NOTE 25 ON G-002 FOR ADDITIONAL INFORMATION.

AECOM

AECOM TECHNICAL SERVICES, INC.
3101 WILSON BOULEVARD
SUITE 900
ARLINGTON, VA 22201

T: 703-682-4900 F: 703.682.4901
www.aecom.com

SEAL AREA

STATE OF MARYLAND — THOMAS J. GILLAN — No. 36204 — PROFESSIONAL ENGINEER

KEY PLAN

SEGMENT - B

REV	DATE	DESCRIPTION	S&R BR.	CUSTOMER	PM	SECT. HEAD

	INITIALS	DATE
DRAWN BY	MJI	
CHECKED BY	KTB	
A-E MANAGER	EW	
ENVIRONMENTAL BRANCH	JH	
SAFETY BRANCH	CS	
CM	MMD	
PM	RWP	
CUSTOMER	JWB	
ENG. BRANCH	DGL	

Level 2 Framing Plan - Segment B

S-102b

FLIGHT PROJECTS BUILDING

NATIONAL AERONAUTICS AND SPACE ADMINISTRATION

GODDARD SPACE FLIGHT CENTER GREENBELT, MARYLAND
FACILITIES MANAGEMENT DIVISION

DATE ISSUED	CoF CODE OR WR#	AECOM PROJECT NO.	SCALE
10/12/2012	12GXAZ	60187636	1/8" = 1'-0"

FILE DATE: 10/10/2012 3:25:13 PM

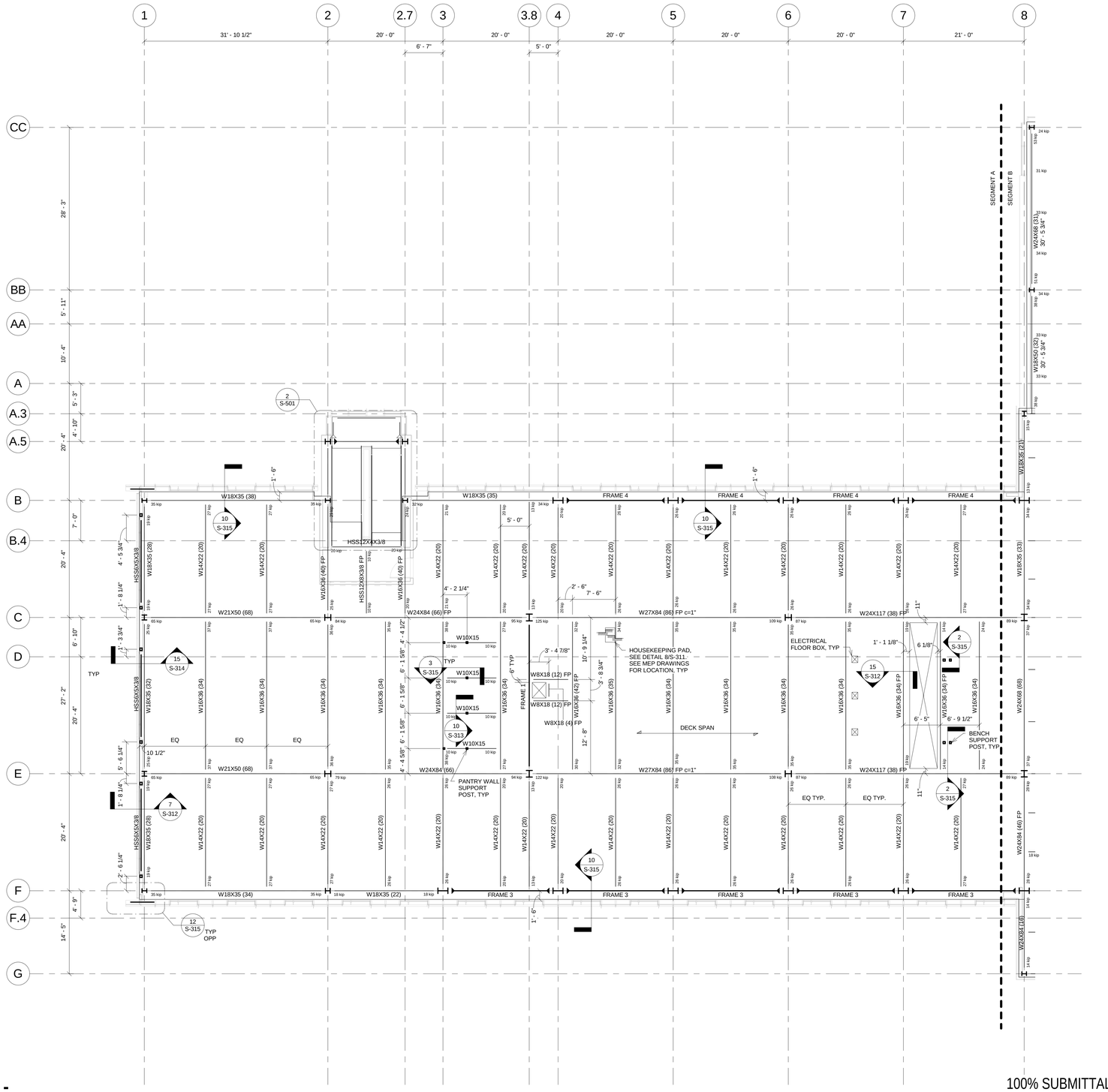

1 LEVEL 3 FRAMING PLAN - SEGMENT A

S-103a REF. S-201 SCALE: 1/8" = 1'-0"

SHEET NOTES

1. DECK IS 3-1/4" LIGHTWEIGHT CONCRETE ON 3", 20 GAGE, COMPOSITE METAL DECK (6-1/4" TOTAL THICKNESS). 3 SPANS MINIMUM. REINFORCE WITH 6x6-W2.0XW2.0 WWF, TYP.
2. T/STEEL = 31'-5 3/4" U.N.O.
3. ALL SHEAR STUDS ARE TO BE 5-3/8" TALL UNLESS NOTED OTHERWISE.
4. EDGE OF SLAB AT ALL INTERIOR OPENINGS IS TO BE 6" BEYOND BEAM CENTERLINE, U.N.O.
5. SEE SHEET S-201 FOR FRAME ELEVATIONS.
6. PROVIDE A MINIMUM OF (1) STUD PER FOOT FOR ALL SPANS WHERE STUDS ARE NOT INDICATED.
7. PROVIDE FIREPROOFING FOR STRUCTURAL MEMBERS INDICATED WITH "FP" DESIGNATION. SEE FIRE PROTECTION NOTE 25 ON G-002 FOR ADDITIONAL INFORMATION.

NORTH

SYMBOL LEGEND

FRAME MOMENT CONNECTION

CANTILEVER MOMENT CONNECTION

1/8"=1'-0" 8' 4' 0 8' 16'

100% SUBMITTAL

AECOM

AECOM TECHNICAL SERVICES, INC.
3101 WILSON BOULEVARD
SUITE 900
ARLINGTON, VA 22201

T: 703-682-4900 F: 703.682.4901
www.aecom.com

SEAL AREA

STATE OF MARYLAND
THOMAS J. GILLASPIE
No. 21021A
PROFESSIONAL ENGINEER

KEY PLAN

SEGMENT - A

REV	DATE	DESCRIPTION	S&R BR.	CUSTOMER	PM	SECT. HEAD

	INITIALS	DATE
DRAWN BY	MJI	
CHECKED BY	KTB	
A-E MANAGER	EW	
ENVIRONMENTAL BRANCH	JH	
SAFETY BRANCH	CS	
CM	MMD	
PM	RWP	
CUSTOMER	JWB	
ENG. BRANCH	DGL	

Level 3 Framing Plan - Segment A

S-103a

FLIGHT PROJECTS BUILDING

NATIONAL AERONAUTICS AND SPACE ADMINISTRATION

GODDARD SPACE FLIGHT CENTER GREENBELT, MARYLAND
FACILITIES MANAGEMENT DIVISION

DATE ISSUED	CoF CODE OR WR#	AECOM PROJECT NO.	SCALE
10/12/2012	12GXAZ	60187636	1/8" = 1'-0"

FILE DATE: 10/10/2012 3:25:18 PM

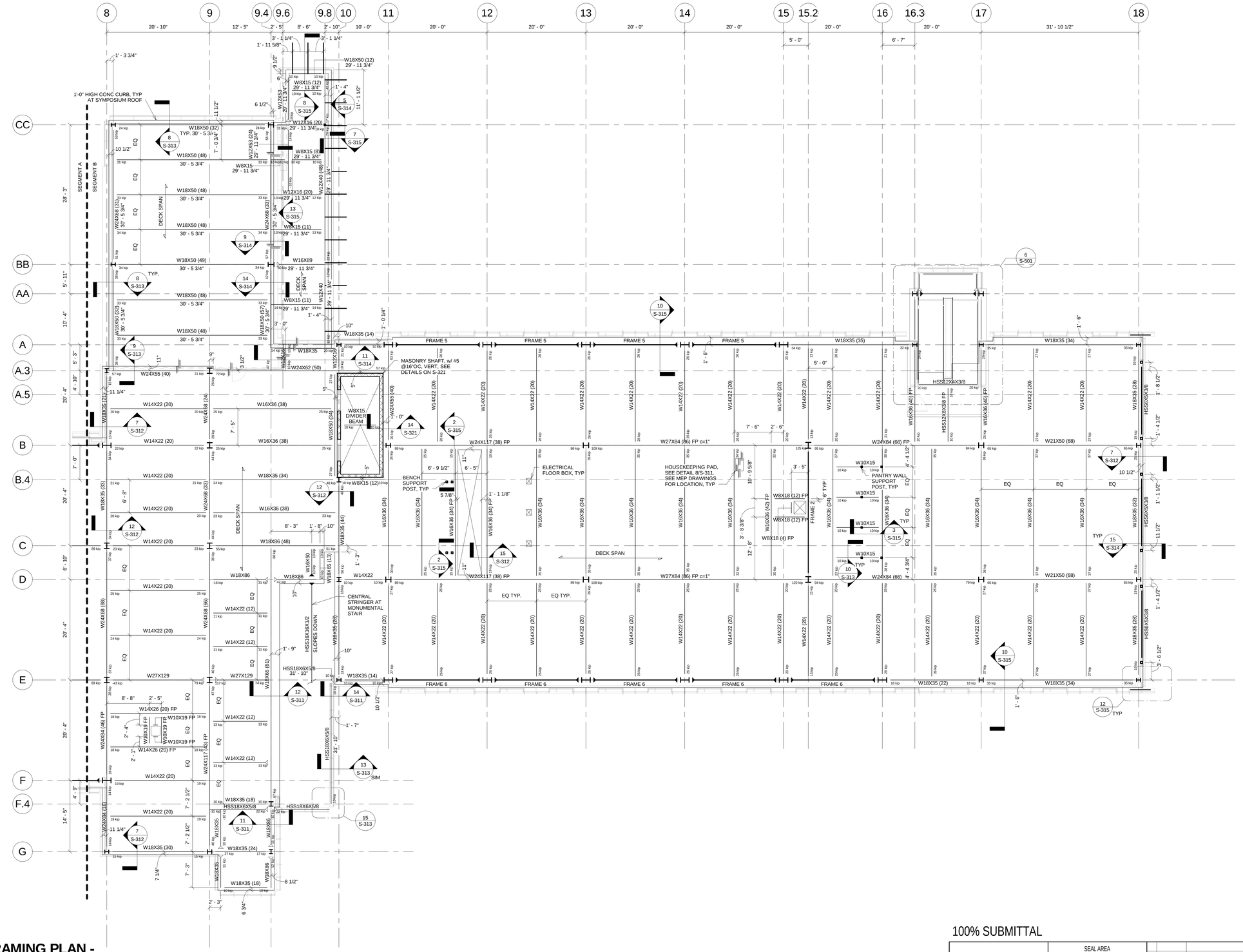

LEVEL 3 FRAMING PLAN - SEGMENT B

1 | S-103b REF. S-201 SCALE: 1/8" = 1'-0"

SHEET NOTES

1. DECK IS 3-1/4" LIGHTWEIGHT CONCRETE ON 3", 20 GAGE, COMPOSITE METAL DECK (6-1/4" TOTAL THICKNESS). 3 SPANS MINIMUM. REINFORCE WITH 6x6-W2.0XW2.0 WWF, TYP.
2. ALL SHEAR STUDS ARE TO BE 5-3/8" TALL UNLESS NOTED OTHERWISE.
3. EDGE OF SLAB AT ALL INTERIOR OPENINGS IS TO BE 6" BEYOND BEAM CENTERLINE, U.N.O.
4. SEE SHEET S-201 FOR FRAME ELEVATIONS.
5. PROVIDE A MINIMUM OF (1) STUD PER FOOT FOR ALL SPANS WHERE STUDS ARE NOT INDICATED.
6. PROVIDE FIREPROOFING FOR STRUCTURAL MEMBERS INDICATED WITH "FP" DESIGNATION. SEE FIRE PROTECTION NOTE 25 ON G-002 FOR ADDITIONAL INFORMATION.
7. T/STEEL = 31'-5 3/4" U.N.O. AS FOLLOWS: BEAM SIZE / T/STL ELEVATION

100% SUBMITTAL

NORTH

SYMBOL LEGEND

- FRAME MOMENT CONNECTION
- CANTILEVER MOMENT CONNECTION

1/8"=1'-0" 8' 4' 0 8' 16'

AECOM

AECOM TECHNICAL SERVICES, INC.
3101 WILSON BOULEVARD
SUITE 900
ARLINGTON, VA 22201

T: 703-682-4900 F: 703.682.4901
www.aecom.com

SEAL AREA

STATE OF MARYLAND — THOMAS J. GILLARD — No. 0402018 — PROFESSIONAL ENGINEER

KEY PLAN

SEGMENT - B

REV	DATE	DESCRIPTION	S&R BR.	CUSTOMER	PM	SECT. HEAD

	INITIALS	DATE
DRAWN BY	MJI	
CHECKED BY	KTB	
A-E MANAGER	EW	
ENVIRONMENTAL BRANCH	JH	
SAFETY BRANCH	CS	
CM	MMD	
PM	RWP	
CUSTOMER	JWB	
ENG. BRANCH	DGL	

Level 3 Framing Plan - Segment B

S-103b

FLIGHT PROJECTS BUILDING

NATIONAL AERONAUTICS AND SPACE ADMINISTRATION

GODDARD SPACE FLIGHT CENTER GREENBELT, MARYLAND
FACILITIES MANAGEMENT DIVISION

DATE ISSUED	CoF CODE OR WR#	AECOM PROJECT NO.	SCALE
10/12/2012	12GXAZ	60187636	1/8" = 1'-0"

FILE DATE: 10/10/2012 3:25:24 PM

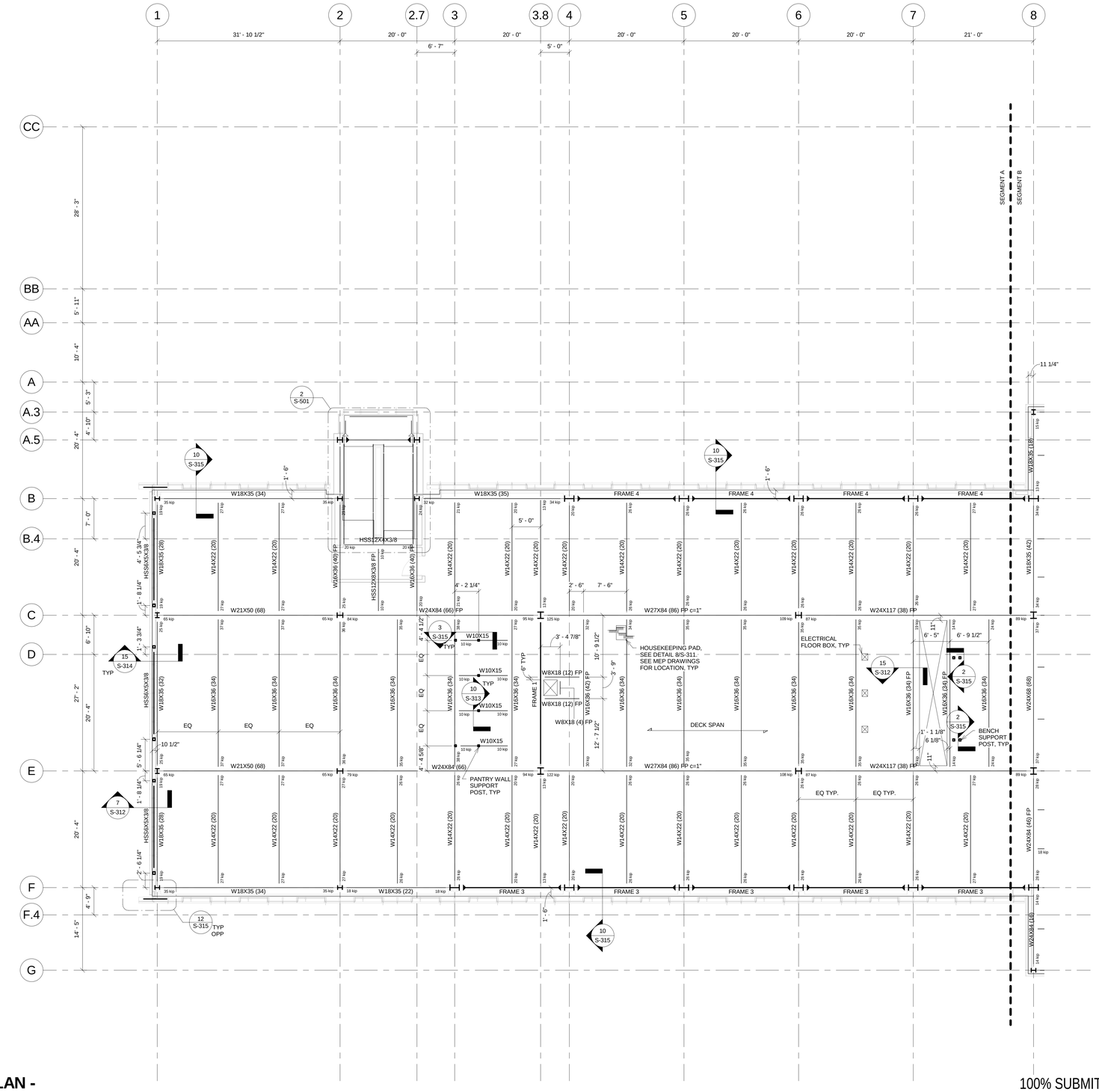

1 LEVEL 4 FRAMING PLAN - SEGMENT A

S-104a | REF. S-201 SCALE: 1/8" = 1'-0"

100% SUBMITTAL

NORTH

SHEET NOTES

1. DECK IS 3-1/4" LIGHTWEIGHT CONCRETE ON 3", 20 GAGE, COMPOSITE METAL DECK (6-1/4" TOTAL THICKNESS). 3 SPANS MINIMUM. REINFORCE WITH 6x6-W2.0XW2.0 WWF, TYP.
2. T/STEEL = 47'-5 3/4" U.N.O.
3. ALL SHEAR STUDS ARE TO BE 5-3/8" TALL UNLESS NOTED OTHERWISE.
4. EDGE OF SLAB AT ALL INTERIOR OPENINGS IS TO BE 6" BEYOND BEAM CENTERLINE, U.N.O.
5. SEE SHEET S-201 FOR FRAME ELEVATIONS.
6. PROVIDE A MINIMUM OF (1) STUD PER FOOT FOR ALL SPANS WHERE STUDS ARE NOT INDICATED.
7. PROVIDE FIREPROOFING FOR STRUCTURAL MEMBERS INDICATED WITH "FP" DESIGNATION. SEE FIRE PROTECTION NOTE 25 ON G-002 FOR ADDITIONAL INFORMATION.

SYMBOL LEGEND

- FRAME MOMENT CONNECTION
- CANTILEVER MOMENT CONNECTION

1/8"=1'-0" 8' 4' 0 8' 16'

AECOM

AECOM TECHNICAL SERVICES, INC.
3101 WILSON BOULEVARD
SUITE 900
ARLINGTON, VA 22201

T: 703-682-4900 F: 703.682.4901
www.aecom.com

SEAL AREA

STATE OF MARYLAND THOMAS J. GALLAGHER No. 36224 PROFESSIONAL ENGINEER

KEY PLAN

SEGMENT - A

REV	DATE	DESCRIPTION	S&R BR.	CUSTOMER	PM	SECT. HEAD

	INITIALS	DATE
DRAWN BY	MJI	
CHECKED BY	KTB	
A-E MANAGER	EW	
ENVIRONMENTAL BRANCH	JH	
SAFETY BRANCH	CS	
CM	MMD	
PM	RWP	
CUSTOMER	JWB	
ENG. BRANCH	DGL	

Level 4 Framing Plan - Segment A

S-104a

FLIGHT PROJECTS BUILDING

NATIONAL AERONAUTICS AND SPACE ADMINISTRATION

GODDARD SPACE FLIGHT CENTER GREENBELT, MARYLAND
FACILITIES MANAGEMENT DIVISION

DATE ISSUED	CoF CODE OR WR#	AECOM PROJECT NO.	SCALE
10/12/2012	12GXAZ	60187636	1/8" = 1'-0"

FILE DATE: 10/10/2012 3:25:28 PM

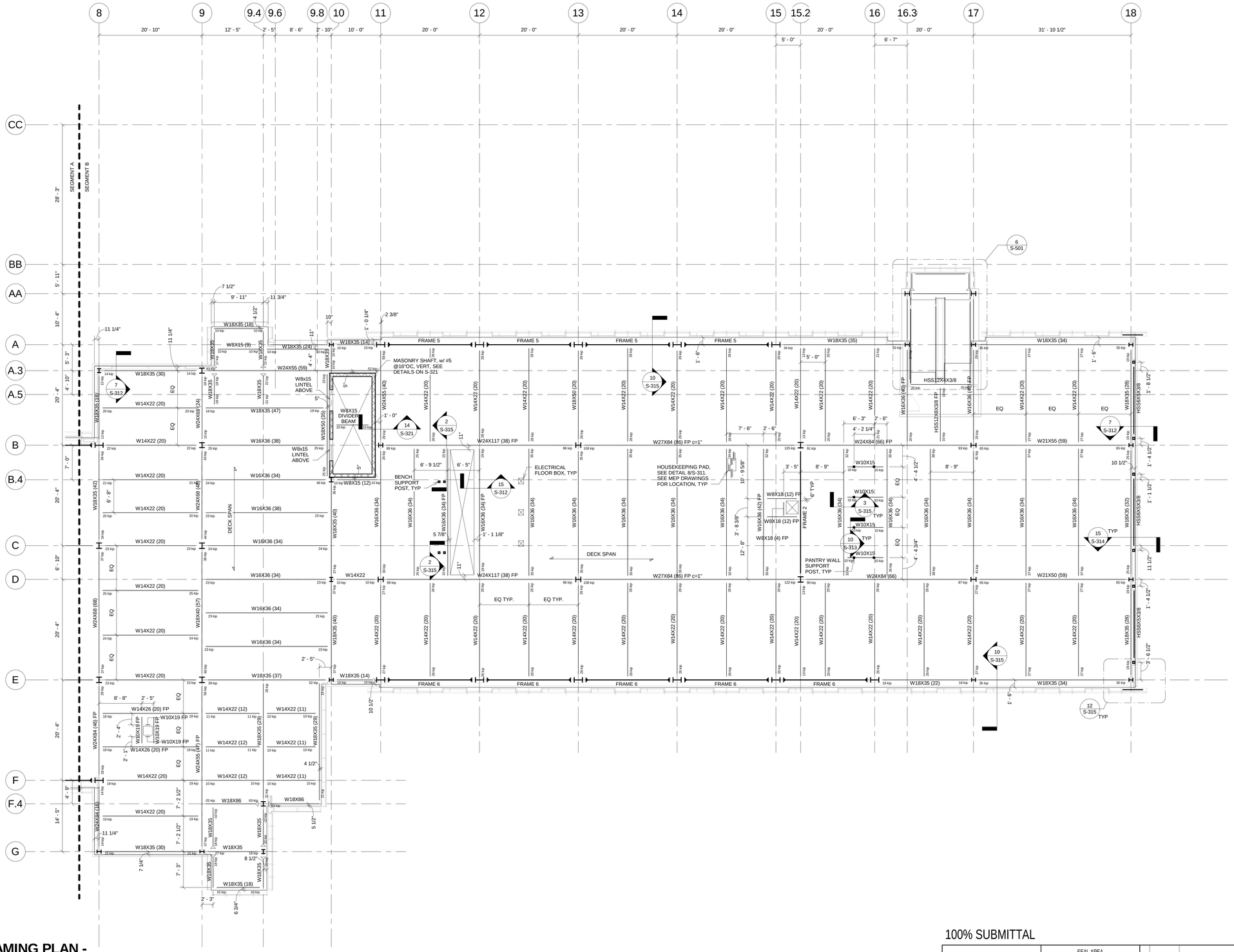

LEVEL 4 FRAMING PLAN - SEGMENT B

1 S-104b REF. S-201 SCALE: 1/8" = 1'-0"

SHEET NOTES

1. DECK IS 3-1/4" LIGHTWEIGHT CONCRETE ON 3", 20 GAGE, COMPOSITE METAL DECK (6-1/4" TOTAL THICKNESS). 3 SPANS MINIMUM. REINFORCE WITH 6x6-W2.0XW2.0 WWF, TYP.
2. T/STEEL = 47'-5 3/4" U.N.O.
3. ALL SHEAR STUDS ARE TO BE 5-3/8" TALL UNLESS NOTED OTHERWISE.
4. EDGE OF SLAB AT ALL INTERIOR OPENINGS IS TO BE 6" BEYOND BEAM CENTERLINE, U.N.O.
5. SEE SHEET S-201 FOR FRAME ELEVATIONS.
6. PROVIDE A MINIMUM OF (1) STUD PER FOOT FOR ALL SPANS WHERE STUDS ARE NOT INDICATED.
7. PROVIDE FIREPROOFING FOR STRUCTURAL MEMBERS INDICATED WITH "FP" DESIGNATION. SEE FIRE PROTECTION NOTE 25 ON G-002 FOR ADDITIONAL INFORMATION.
8. CURTAIN WALL TO ACCOMMODATE 3/8" OF LIVE LOAD DEFLECTION AT 10/F.4

NORTH

SYMBOL LEGEND

- FRAME MOMENT CONNECTION
- CANTILEVER MOMENT CONNECTION

1/8"=1'-0" 8' 4' 0 8' 16'

100% SUBMITTAL

AECOM

AECOM TECHNICAL SERVICES, INC.
3101 WILSON BOULEVARD
SUITE 900
ARLINGTON, VA 22201

T: 703-682-4900 F: 703.682.4901
www.aecom.com

SEAL AREA

STATE OF MARYLAND
THOMAS J. GILLASPIE
No. 34029A
PROFESSIONAL ENGINEER

KEY PLAN

SEGMENT - B

REV	DATE	DESCRIPTION	S&R BR.	CUSTOMER	PM	SECT. HEAD

	INITIALS	DATE
DRAWN BY	MJI	
CHECKED BY	KTB	
A-E MANAGER	EW	
ENVIRONMENTAL BRANCH	JH	
SAFETY BRANCH	CS	
CM	MMD	
PM	RWP	
CUSTOMER	JWB	
ENG. BRANCH	DGL	

Level 4 Framing Plan - Segment B

S-104b

FLIGHT PROJECTS BUILDING

NATIONAL AERONAUTICS AND SPACE ADMINISTRATION

GODDARD SPACE FLIGHT CENTER GREENBELT, MARYLAND
FACILITIES MANAGEMENT DIVISION

DATE ISSUED	CoF CODE OR WR#	AECOM PROJECT NO.	SCALE
10/12/2012	12GXAZ	60187636	1/8" = 1'-0"

FILE DATE: 10/10/2012 3:25:32 PM

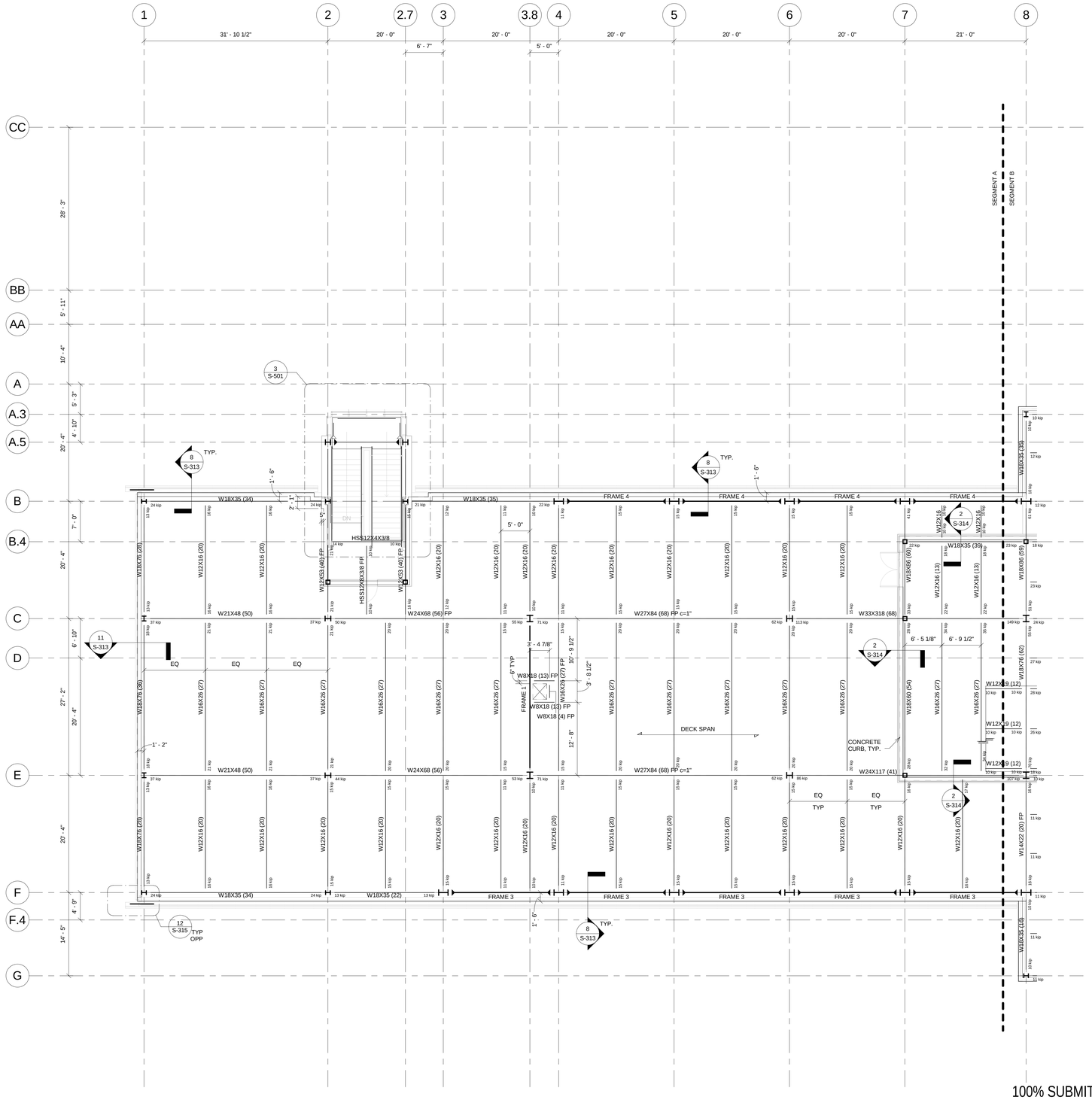

1 ROOF FRAMING PLAN - SEGMENT A

S-105a REF. S-201 SCALE: 1/8" = 1'-0"

SHEET NOTES

1. DECK IS 3-1/4" LIGHTWEIGHT CONCRETE ON 3", 20 GAGE, COMPOSITE METAL DECK (6-1/4" TOTAL THICKNESS). 3 SPANS MINIMUM. REINFORCE WITH 6x6-W2.0XW2.0 WWF, TYP.
2. T/STEEL = 63'-5 3/4" U.N.O.
3. ALL SHEAR STUDS ARE TO BE 5-3/8" TALL UNLESS NOTED OTHERWISE.
4. EDGE OF SLAB AT ALL INTERIOR OPENINGS IS TO BE 6" BEYOND BEAM CENTERLINE, U.N.O.
5. SEE SHEET S-201 FOR FRAME ELEVATIONS.
6. PROVIDE A MINIMUM OF (1) STUD PER FOOT FOR ALL SPANS WHERE STUDS ARE NOT INDICATED.
7. PROVIDE FIREPROOFING FOR STRUCTURAL MEMBERS INDICATED WITH "FP" DESIGNATION. SEE FIRE PROTECTION NOTE 25 ON G-002 FOR ADDITIONAL INFORMATION.

NORTH

SYMBOL LEGEND

FRAME MOMENT CONNECTION

CANTILEVER MOMENT CONNECTION

1/8"=1'-0" 8' 4' 0 8' 16'

100% SUBMITTAL

AECOM

AECOM TECHNICAL SERVICES, INC.
3101 WILSON BOULEVARD
SUITE 900
ARLINGTON, VA 22201

T: 703-682-4900 F: 703.682.4901
www.aecom.com

SEAL AREA

STATE OF MARYLAND
THOMAS J. GILLAND
No. 30204
PROFESSIONAL ENGINEER

KEY PLAN

SEGMENT - A

REV	DATE	DESCRIPTION	S&R BR.	CUSTOMER	PM	SECT. HEAD

	INITIALS	DATE
DRAWN BY	MJI	
CHECKED BY	KTB	
A-E MANAGER	EW	
ENVIRONMENTAL BRANCH	JH	
SAFETY BRANCH	CS	
CM	MMD	
PM	RWP	
CUSTOMER	JWB	
ENG. BRANCH	DGL	

Roof Framing Plan - Segment A

S-105a

FLIGHT PROJECTS BUILDING

NATIONAL AERONAUTICS AND SPACE ADMINISTRATION

GODDARD SPACE FLIGHT CENTER GREENBELT, MARYLAND
FACILITIES MANAGEMENT DIVISION

DATE ISSUED	CoF CODE OR WR#	AECOM PROJECT NO.	SCALE
10/12/2012	12GXAZ	60187636	1/8" = 1'-0"

FILE DATE: 10/10/2012 3:25:35 PM

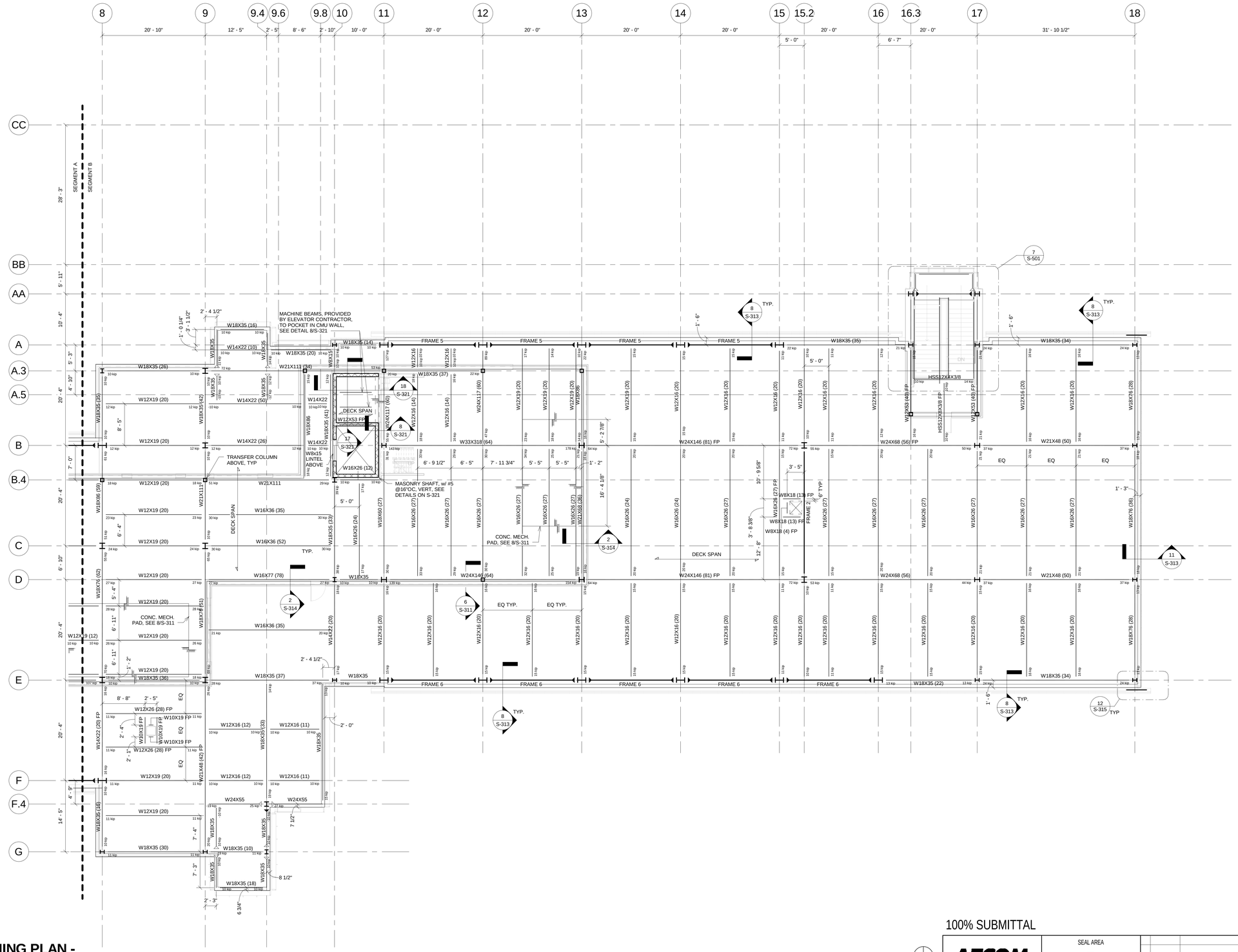

1 ROOF FRAMING PLAN - SEGMENT B

S-105b REF. S-201 SCALE: 1/8" = 1'-0"

SHEET NOTES

1. DECK IS 3-1/4" LIGHTWEIGHT CONCRETE ON 3", 20 GAGE, COMPOSITE METAL DECK (6-1/4" TOTAL THICKNESS). 3 SPANS MINIMUM. REINFORCE WITH 6x6-W2.0XW2.0 WWF, TYP.
2. T/STEEL = 63'-5 3/4" U.N.O.
3. ALL SHEAR STUDS ARE TO BE 5-3/8" TALL UNLESS NOTED OTHERWISE.
4. EDGE OF SLAB AT ALL INTERIOR OPENINGS IS TO BE 6" BEYOND BEAM CENTERLINE, U.N.O.
5. SEE SHEET S-201 FOR FRAME ELEVATIONS.
6. PROVIDE A MINIMUM OF (1) STUD PER FOOT FOR ALL SPANS WHERE STUDS ARE NOT INDICATED.
7. PROVIDE FIREPROOFING FOR STRUCTURAL MEMBERS INDICATED WITH "FP" DESIGNATION. SEE FIRE PROTECTION NOTE 25 ON G-002 FOR ADDITIONAL INFORMATION.
8. CURTAIN WALL TO ACCOMMODATE 3/8" OF LIVE LOAD DEFLECTION AT 10/F.4

NORTH

SYMBOL LEGEND

- FRAME MOMENT CONNECTION
- CANTILEVER MOMENT CONNECTION

1/8"=1'-0" 8' 4' 0 8' 16'

100% SUBMITTAL

AECOM

AECOM TECHNICAL SERVICES, INC.
3101 WILSON BOULEVARD
SUITE 900
ARLINGTON, VA 22201

T: 703-682-4900 F: 703.682.4901
www.aecom.com

SEAL AREA

STATE OF MARYLAND THOMAS J. GILLASPIE III No. 34029A PROFESSIONAL ENGINEER

KEY PLAN

SEGMENT - B

REV	DATE	DESCRIPTION	S&R BR.	CUSTOMER	PM	SECT. HEAD

	INITIALS	DATE
DRAWN BY	MJI	
CHECKED BY	KTB	
A-E MANAGER	EW	
ENVIRONMENTAL BRANCH	JH	
SAFETY BRANCH	CS	
CM	MMD	
PM	RWP	
CUSTOMER	JWB	
ENG. BRANCH	DGL	

Roof Framing Plan - Segment B

S-105b

FLIGHT PROJECTS BUILDING

NATIONAL AERONAUTICS AND SPACE ADMINISTRATION

GODDARD SPACE FLIGHT CENTER GREENBELT, MARYLAND
FACILITIES MANAGEMENT DIVISION

DATE ISSUED	CoF CODE OR WR#	AECOM PROJECT NO.	SCALE
10/12/2012	12GXAZ	60187636	1/8" = 1'-0"

FILE DATE: 10/10/2012 3:25:37 PM

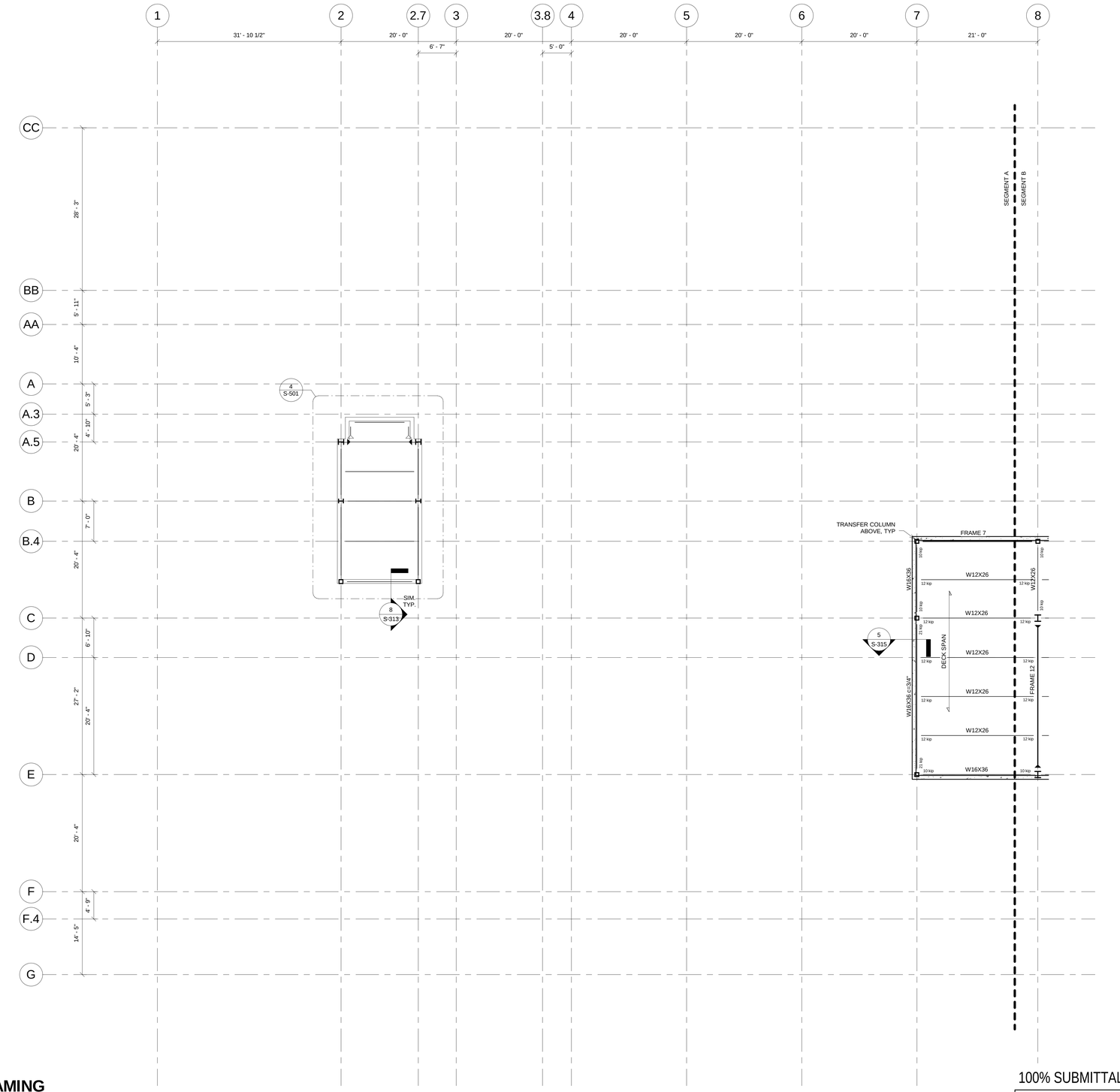

1 PENTHOUSE ROOF FRAMING PLAN - SEGMENT A

S-106a REF. S-202 SCALE: 1/8" = 1'-0"

SHEET NOTES

1. DECK IS 2" LIGHTWEIGHT CONCRETE NON-COMPOSITE TOPPING SLAB ON 1-1/2", 18 GAGE, TYPE B ROOF DECK (3-1/2" TOTAL THICKNESS). 3 SPANS MINIMUM. REINFORCE WITH 6x6-W1.4XW1.4 WWF, TYP.
2. T/STEEL = 79'-8 1/2" U.N.O.
3. EDGE OF SLAB AT ALL INTERIOR OPENINGS IS TO BE 6" BEYOND BEAM CENTERLINE, U.N.O.
4. SEE SHEET S-202 FOR FRAME ELEVATIONS.
5. PROVIDE A MINIMUM OF (1) STUD PER FOOT FOR ALL SPANS WHERE STUDS ARE NOT INDICATED.

NORTH

SYMBOL LEGEND

FRAME MOMENT CONNECTION

CANTILEVER MOMENT CONNECTION

1/8"=1'-0" 8' 4' 0 8' 16'

100% SUBMITTAL

AECOM

AECOM TECHNICAL SERVICES, INC.
3101 WILSON BOULEVARD
SUITE 900
ARLINGTON, VA 22201

T: 703-682-4900 F: 703.682.4901
www.aecom.com

SEAL AREA

STATE OF MARYLAND
THOMAS J. GILSON
No. 34274
PROFESSIONAL ENGINEER

KEY PLAN

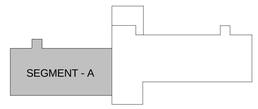

REV	DATE	DESCRIPTION	S&R BR.	CUSTOMER	PM	SECT. HEAD

	INITIALS	DATE
DRAWN BY	MJI	
CHECKED BY	KTB	
A-E MANAGER	EW	
ENVIRONMENTAL BRANCH	JH	
SAFETY BRANCH	CS	
CM	MMD	
PM	RWP	
CUSTOMER	JWB	
ENG. BRANCH	DGL	

Penthouse Roof Framing Plan - Segment A

S-106a

FLIGHT PROJECTS BUILDING

NATIONAL AERONAUTICS AND SPACE ADMINISTRATION

GODDARD SPACE FLIGHT CENTER GREENBELT, MARYLAND
FACILITIES MANAGEMENT DIVISION

DATE ISSUED	CoF CODE OR WR#	AECOM PROJECT NO.	SCALE
10/12/2012	12GXAZ	60187636	1/8" = 1'-0"

FILE DATE: 10/10/2012 3:25:38 PM

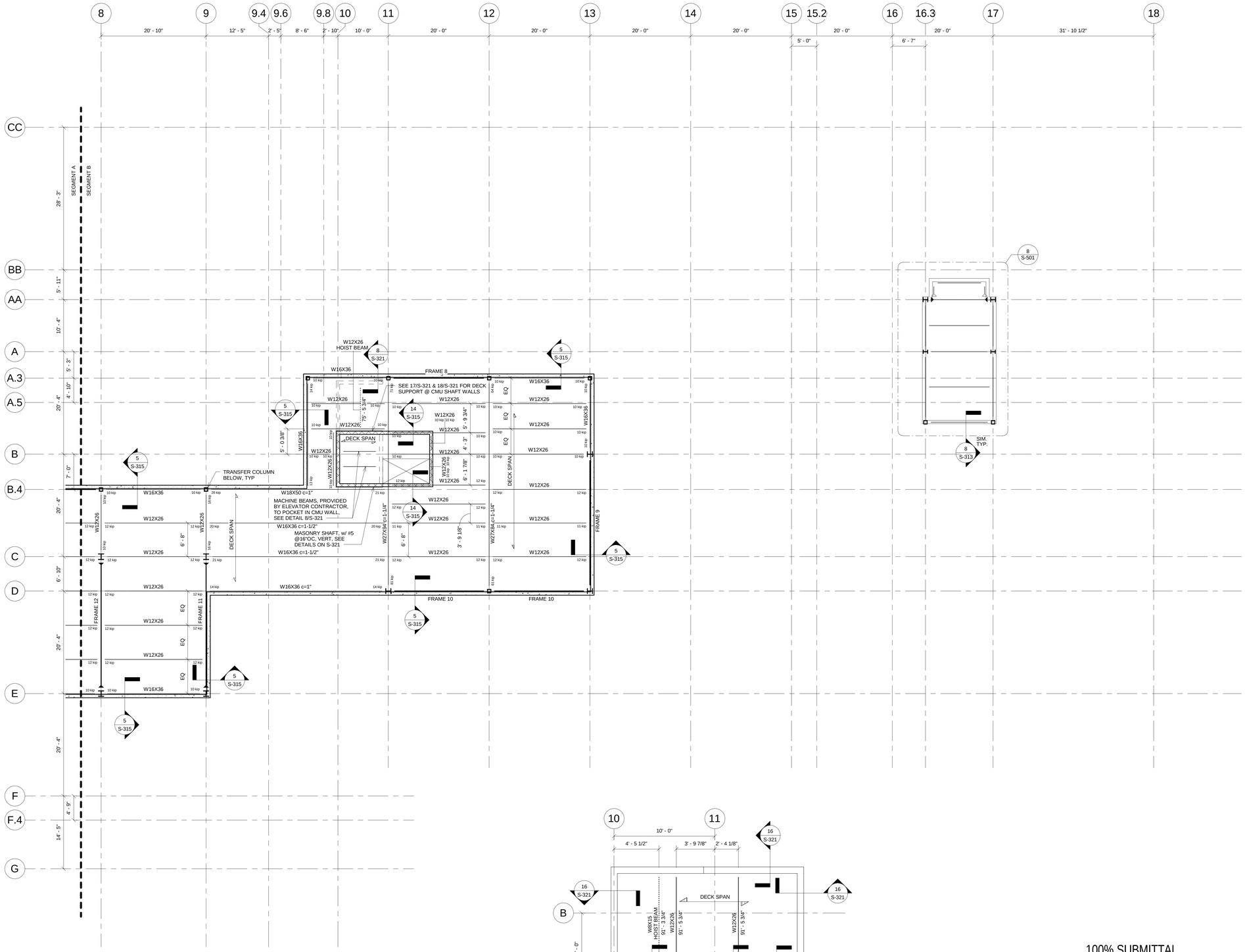

1 PENTHOUSE ROOF FRAMING PLAN - SEGMENT B

S-106b REF. S-202 SCALE: 1/8" = 1'-0"

SHEET NOTES

1. DECK IS 2" LIGHTWEIGHT CONCRETE NON-COMPOSITE TOPPING SLAB ON 1-1/2", 18 GAGE, TYPE B ROOF DECK (3-1/2" TOTAL THICKNESS). 3 SPANS MINIMUM. REINFORCE WITH 6x6-W1.4XW1.4 WWF, TYP.
2. T/STEEL = 79'-8 1/2" U.N.O.
3. EDGE OF SLAB AT ALL INTERIOR OPENINGS IS TO BE 6" BEYOND BEAM CENTERLINE, U.N.O.
4. SEE SHEET S-202 FOR FRAME ELEVATIONS.
5. PROVIDE A MINIMUM OF (1) STUD PER FOOT FOR ALL SPANS WHERE STUDS ARE NOT INDICATED.

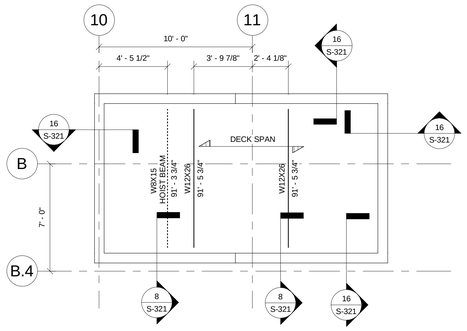

2 ELEVATOR MACHINE ROOM ROOF FRAMING PLAN

S-106b REF. S-106a SCALE: 1/4" = 1'-0"

NORTH

SYMBOL LEGEND

FRAME MOMENT CONNECTION

CANTILEVER MOMENT CONNECTION

1/8"=1'-0" 8' 4' 0 8' 16'

100% SUBMITTAL

AECOM

AECOM TECHNICAL SERVICES, INC.
3101 WILSON BOULEVARD
SUITE 900
ARLINGTON, VA 22201

T: 703-682-4900 F: 703.682.4901
www.aecom.com

SEAL AREA

STATE OF MARYLAND
THOMAS J. GULLA
No. 34029A
PROFESSIONAL ENGINEER

KEY PLAN

SEGMENT - B

REV	DATE	DESCRIPTION	S&R BR.	CUSTOMER	PM	SECT. HEAD

	INITIALS	DATE
DRAWN BY	MJI	
CHECKED BY	KTB	
A-E MANAGER	EW	
ENVIRONMENTAL BRANCH	JH	
SAFETY BRANCH	CS	
CM	MMD	
PM	RWP	
CUSTOMER	JWB	
ENG. BRANCH	DGL	

Penthouse Roof Framing Plan - Segment B

S-106b

FLIGHT PROJECTS BUILDING

NATIONAL AERONAUTICS AND SPACE ADMINISTRATION

GODDARD SPACE FLIGHT CENTER GREENBELT, MARYLAND
FACILITIES MANAGEMENT DIVISION

DATE ISSUED	CoF CODE OR WR#	AECOM PROJECT NO.	SCALE
10/12/2012	12GXAZ	60187636	As indicated

FILE DATE: 10/10/2012 3:25:40 PM

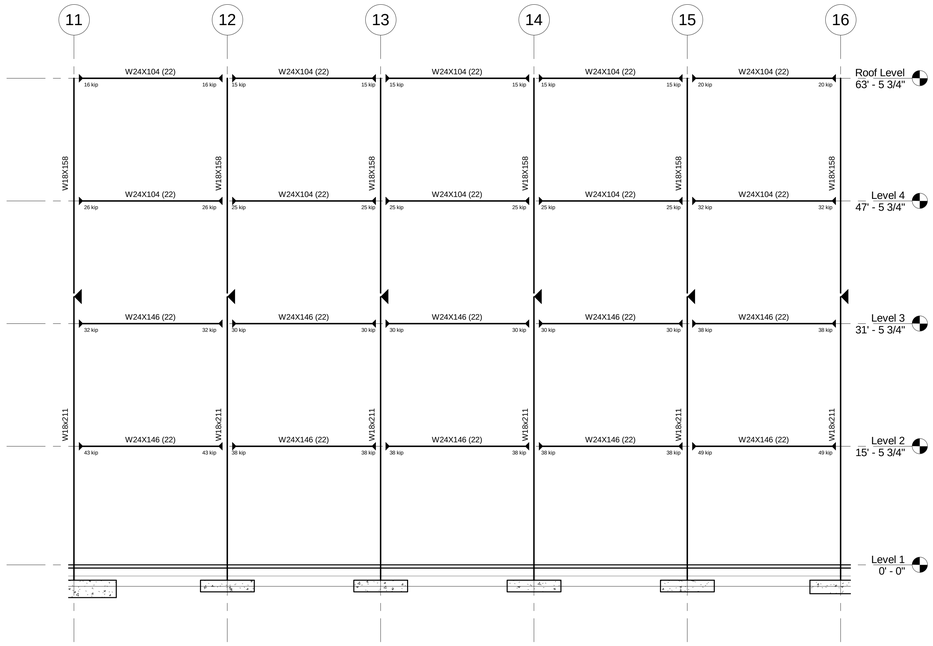

6 FRAME 6

S-201 REF. SCALE: 1/8" = 1'-0"

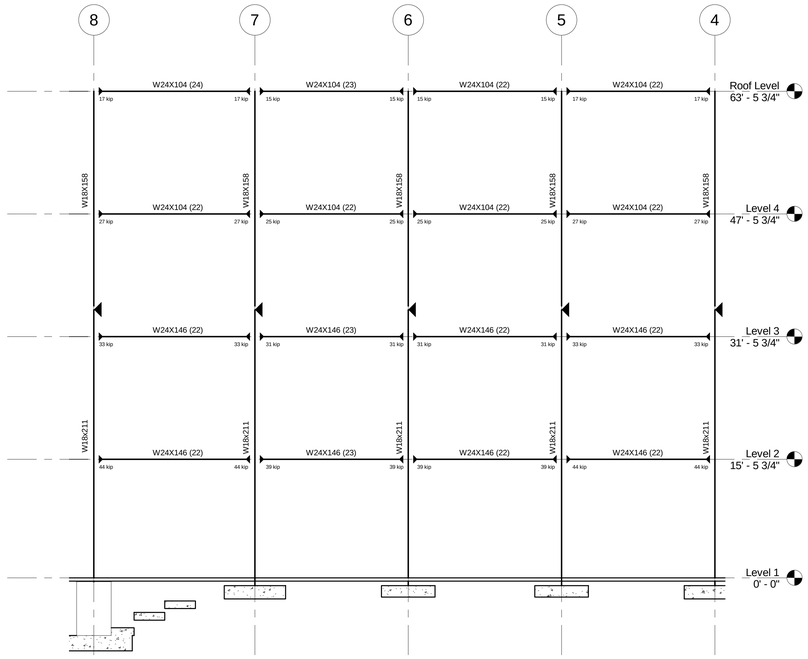

4 FRAME 4

S-201 REF. S-102b SCALE: 1/8" = 1'-0"

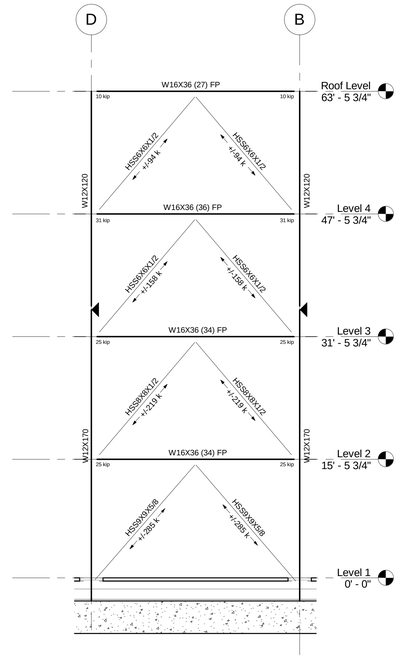

2 FRAME 2

S-201 REF. SCALE: 1/8" = 1'-0"

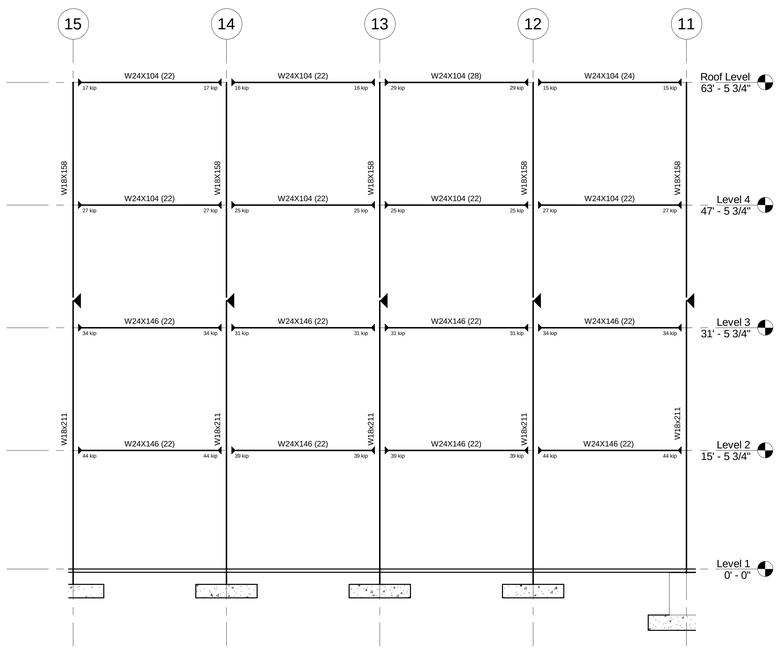

5 FRAME 5

S-201 REF. SCALE: 1/8" = 1'-0"

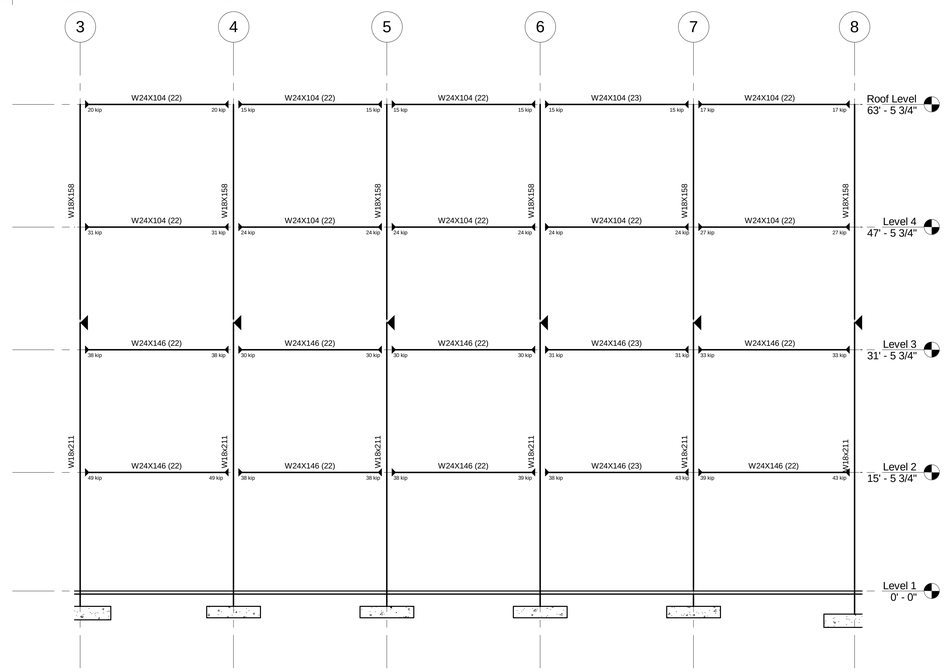

3 FRAME 3

S-201 REF. S-102b SCALE: 1/8" = 1'-0"

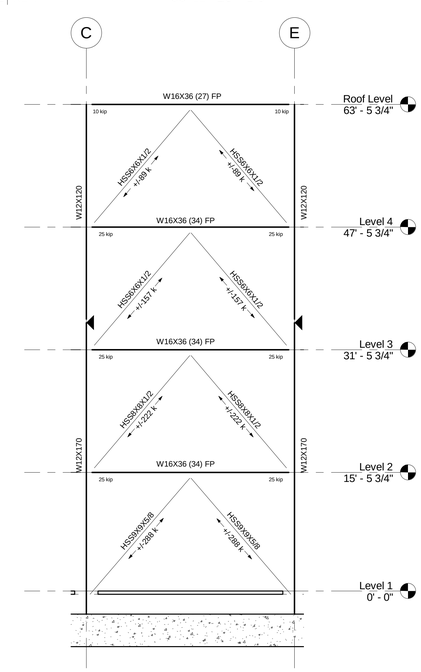

1 FRAME 1

S-201 REF. SCALE: 1/8" = 1'-0"

SHEET NOTES:

1. ALL COLUMN SPLICES AT FRAME COLUMNS TO BE MOMENT CONNECTIONS TO DEVELOP FULL PLASTIC MOMENT CAPACITY OF COLUMN. SEE DETAIL 4/S-312 FOR ADDITIONAL INFORMATION.
2. SEE STEEL COLUMN SCHEDULE FOR MORE INFORMATION.

SYMBOL LEGEND

- TYPICAL BOLTED OR WELDED COLUMN SPLICE
- MOMENT CONNECTION COLUMN SPLICE
- FRAME MOMENT CONNECTION

100% SUBMITTAL

AECOM

AECOM TECHNICAL SERVICES, INC.
3101 WILSON BOULEVARD
SUITE 900
ARLINGTON, VA 22201

T: 703-682-4900 F: 703.682.4901
www.aecom.com

SEAL AREA

STATE OF MARYLAND
THOMAS J. GILLIGAN
No. 34028
PROFESSIONAL ENGINEER

KEY PLAN

REV	DATE	DESCRIPTION	S&R BR.	CUSTOMER	PM	SECT. HEAD

	INITIALS	DATE
DRAWN BY	MJI	
CHECKED BY	KTB	
A-E MANAGER	EW	
ENVIRONMENTAL BRANCH	JH	
SAFETY BRANCH	CS	
CM	MMD	
PM	RWP	
CUSTOMER	JWB	
ENG. BRANCH	DGL	

Frame Elevations

S-201

FLIGHT PROJECTS BUILDING

NATIONAL AERONAUTICS AND SPACE ADMINISTRATION

GODDARD SPACE FLIGHT CENTER GREENBELT, MARYLAND
FACILITIES MANAGEMENT DIVISION

DATE ISSUED	CoF CODE OR WR#	AECOM PROJECT NO.	SCALE
10/12/2012	12GXAZ	60187636	As indicated

FILE DATE: 10/10/2012 3:25:43 PM

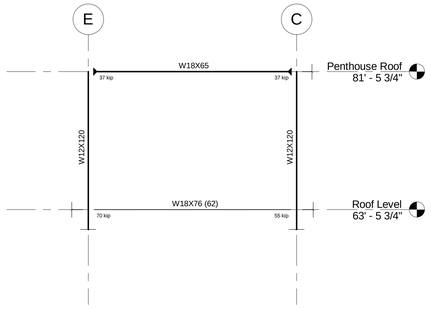

8 FRAME 12

S-202 REF. SCALE: 1/8" = 1'-0"

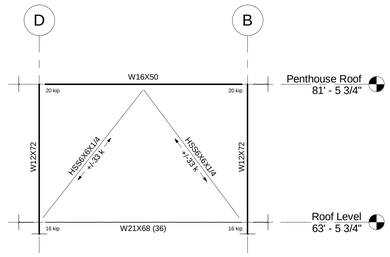

4 FRAME 9

S-202 REF. SCALE: 1/8" = 1'-0"

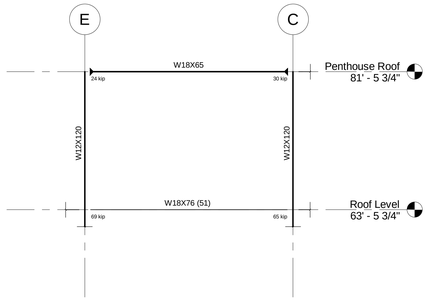

7 FRAME 11

S-202 REF. SCALE: 1/8" = 1'-0"

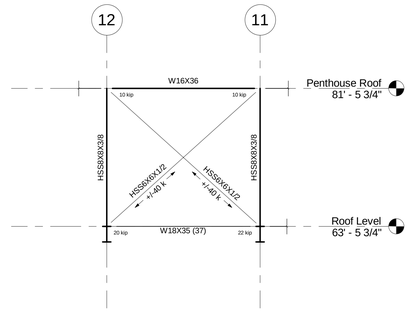

3 FRAME 8

S-202 REF. SCALE: 1/8" = 1'-0"

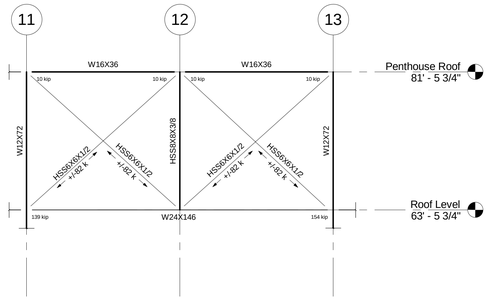

6 FRAME 10

S-202 REF. SCALE: 1/8" = 1'-0"

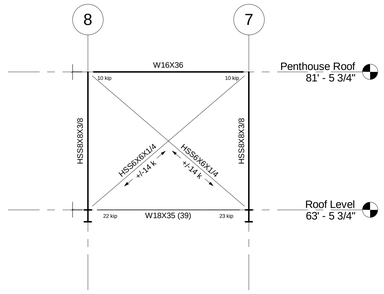

2 FRAME 7

S-202 REF. S-105b SCALE: 1/8" = 1'-0"

SHEET NOTES:

1. ALL COLUMN SPLICES AT FRAME COLUMNS TO BE MOMENT CONNECTIONS TO DEVELOP FULL PLASTIC MOMENT CAPACITY OF COUMNSEE DETAIL 4/S-312 FOR ADDITIONAL INFORMATION.
2. SEE STEEL COLUMN SCHEDULE FOR MORE INFORMATION.
3. SEE TYP TRANSFER COLUMN DETAIL, 8/S-311 FOR CONNECTION OF HSS-SHAPES TO W-SHAPES BELOW

SYMBOL LEGEND

TYPICAL BOLTED OR WELDED COLUMN SPLICE

MOMENT CONNECTION COLUMN SPLICE

FRAME MOMENT CONNECTION

100% SUBMITTAL

AECOM

AECOM TECHNICAL SERVICES, INC.
3101 WILSON BOULEVARD
SUITE 900
ARLINGTON, VA 22201

T: 703-682-4900 F: 703.682.4901
www.aecom.com

SEAL AREA

STATE OF MARYLAND
THOMAS J. GILLARD
No. 34024A
PROFESSIONAL ENGINEER

KEY PLAN

REV	DATE	DESCRIPTION	S&R BR.	CUSTOMER	PM	SECT. HEAD

	INITIALS	DATE
DRAWN BY	MJI	
CHECKED BY	KTB	
A-E MANAGER	EW	
ENVIRONMENTAL BRANCH	JH	
SAFETY BRANCH	CS	
CM	MMD	
PM	RWP	
CUSTOMER	JWB	
ENG. BRANCH	DGL	

Frame Elevations

S-202

FLIGHT PROJECTS BUILDING

NATIONAL AERONAUTICS AND SPACE ADMINISTRATION

GODDARD SPACE FLIGHT CENTER GREENBELT, MARYLAND
FACILITIES MANAGEMENT DIVISION

DATE ISSUED	CoF CODE OR WR#	AECOM PROJECT NO.	SCALE
10/12/2012	12GXAZ	60187636	As indicated

FILE DATE: 10/10/2012 3:25:44 PM

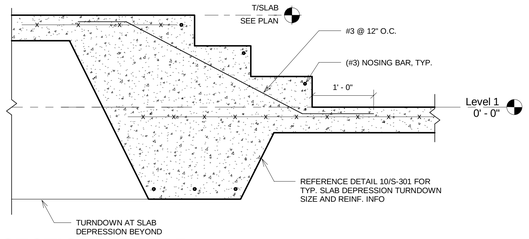

16 SECTION AT SLAB TRANSITION

S-301 REF. S-101b SCALE: 1" = 1'-0"

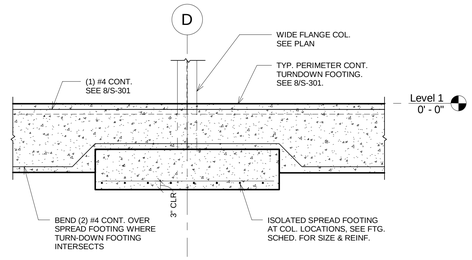

12 TYPICAL TURN-DOWN AT SPREAD FOOTING

S-301 REF. S-101b SCALE: 3/8" = 1'-0"

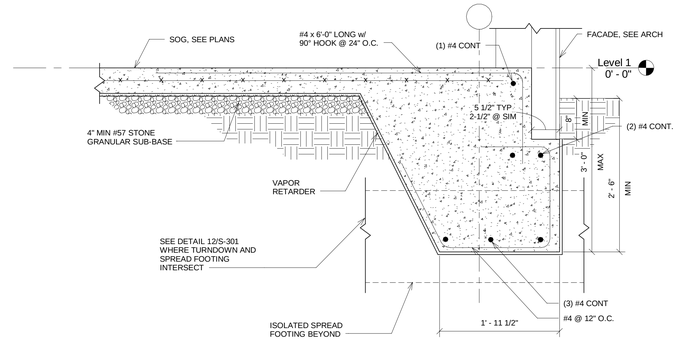

8 TURN-DOWN STRIP FOOTING

S-301 REF. S-101a SCALE: 1" = 1'-0"

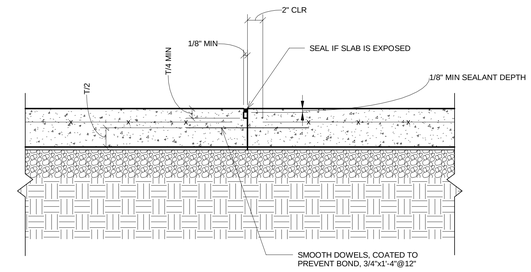

NOTES:

1. SEE FOUNDATION PLAN FOR SLAB THICKNESS.
2. SEE TYPICAL SLAB ON GRADE DETAIL, THIS SHEET, FOR SLAB DETAILS NOT SHOWN.
3. WWF NOT TO EXTEND THROUGH JOINT

4 CONSTRUCTION JOINT

S-301 REF. SCALE: 1 1/2" = 1'-0"

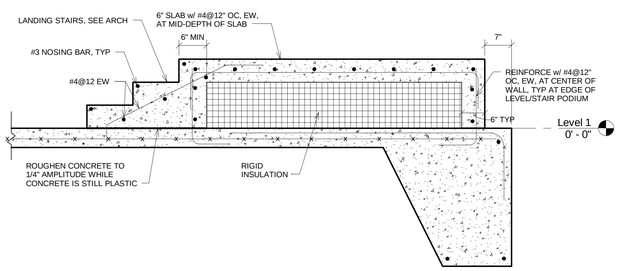

15 CONCRETE STAIRS AT MONUMENTAL STAIR

S-301 REF. S-101b SCALE: 3/4" = 1'-0"

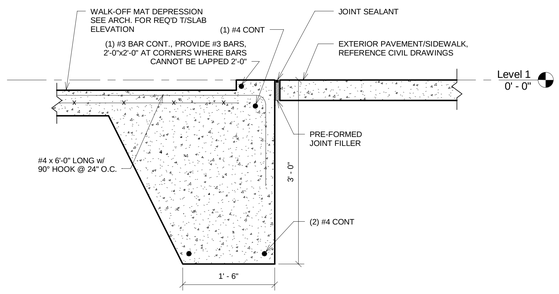

11 SECTION AT ENTRANCE

S-301 REF. S-101a SCALE: 1" = 1'-0"

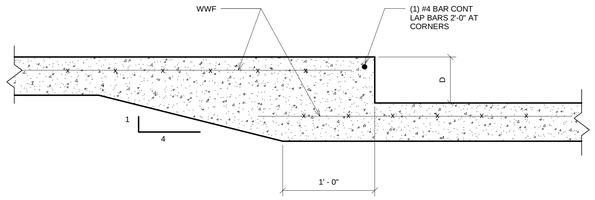

NOTES:

1. SEE ARCHITECTURE DRAWINGS FOR LOCATION AND DEPTH OF SLAB DEPRESSION.
2. SEE TYPICAL SLAB ON GRADE DETAIL, THIS SHEET, FOR SLAB DETAILS NOT SHOWN.
3. SEE FOUNDATION PLAN FOR SLAB THICKNESS.

7 SLAB DEPRESSION (3"<D<8")

S-301 REF. SCALE: 1 1/2" = 1'-0"

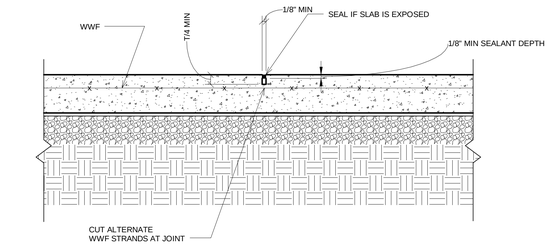

NOTES:

1. SEE FOUNDATION PLAN FOR SLAB THICKNESS.
2. SEE TYPICAL SLAB ON GRADE DETAIL, THIS SHEET, FOR SLAB DETAILS NOT SHOWN.
3. IF FORMED JOINT IS USED, INSERT 1/8" PREMOLDED OR METAL STRIPS WHEN CONCRETE IS PLACED. IF SAWED JOINT IS USED, SEAL IF SLAB IS EXPOSED.
4. COORDINATE CONTROL JOINT LOCATIONS WITH INTERIOR FLOOR FINISHES, SEE ARCH.

3 CONTROL JOINT

S-301 REF. SCALE: 1 1/2" = 1'-0"

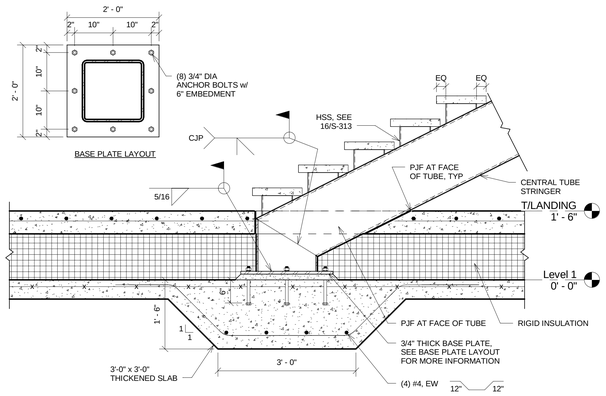

14 STAIR #3 CONNECTION AT BASE OF STRINGER

S-301 REF. S-101b SCALE: 3/4" = 1'-0"

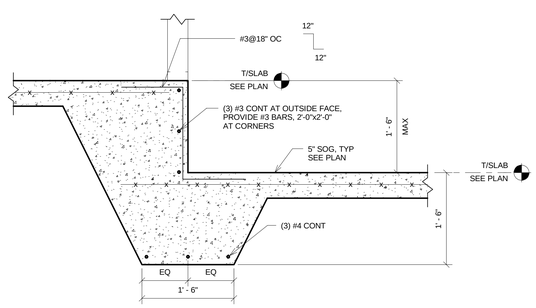

10 SLAB DEPRESSION

S-301 REF. S-101a SCALE: 1" = 1'-0"

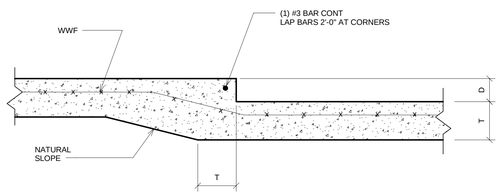

NOTES:

1. SEE ARCHITECTURE DRAWINGS FOR LOCATION AND DEPTH OF SLAB DEPRESSION.
2. SEE TYPICAL SLAB ON GRADE DETAIL, THIS SHEET, FOR SLAB DETAILS NOT SHOWN.
3. SEE FOUNDATION PLAN FOR SLAB THICKNESS.

6 SLAB DEPRESSION (D<3")

S-301 REF. S-101a SCALE: 1 1/2" = 1'-0"

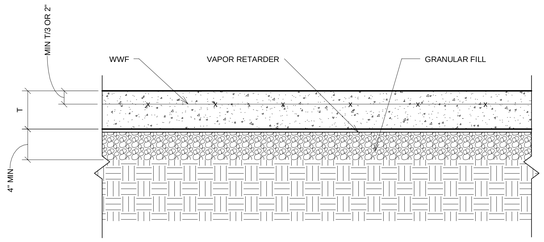

NOTES:

1. SEE FOUNDATION PLAN FOR SLAB THICKNESS.
2. SEE CONCRETE NOTES FOR REINFORCEMENT REQUIREMENTS.
3. PROVIDE CHAIRS TO SUPPORT WWF AT SPECIFIED ELEVATION.

2 TYPICAL SLAB ON GRADE

S-301 REF. SCALE: 1 1/2" = 1'-0"

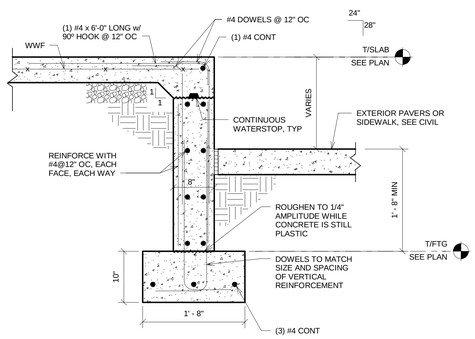

NOTE: SEE DETAIL 9/S-303 FOR STEPPED WALL FOOTING

13 PERIMETER WALL FOOTING

S-301 REF. S-101a SCALE: 1" = 1'-0"

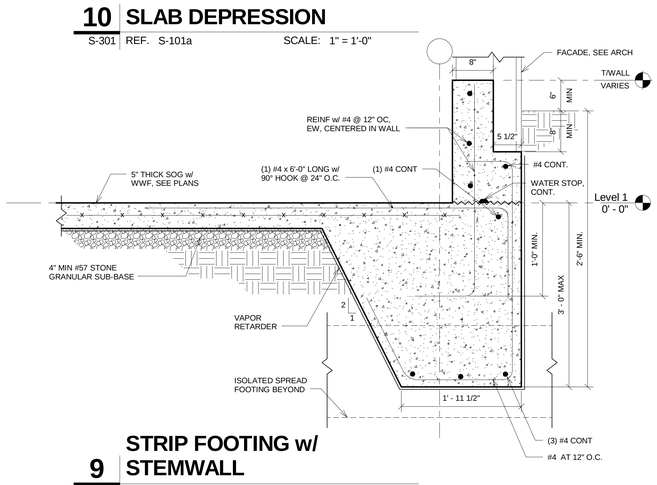

9 STRIP FOOTING w/ STEMWALL

S-301 REF. S-101a SCALE: 1" = 1'-0"

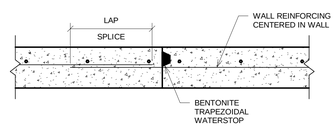

5 CONC STEM WALL CONSTRUCTION JOINT

S-301 REF. SCALE: 1" = 1'-0"

100% SUBMITTAL

AECOM
AECOM TECHNICAL SERVICES, INC.
3101 WILSON BOULEVARD
SUITE 900
ARLINGTON, VA 22201
T: 703-682-4900 F: 703.682.4901
www.aecom.com

SEAL AREA

STATE OF MARYLAND — THOMAS J. GILLIGAN — No. 30274 — PROFESSIONAL ENGINEER

KEY PLAN

REV	DATE	DESCRIPTION	S&R BR.	CUSTOMER	PM	SECT. HEAD

	INITIALS	DATE
DRAWN BY	MJI	
CHECKED BY	KTB	
A-E MANAGER	EW	
ENVIRONMENTAL BRANCH	JH	
SAFETY BRANCH	CS	
CM	MMD	
PM	RWP	
CUSTOMER	JWB	
ENG. BRANCH	DGL	

Typical Foundation Details

S-301

FLIGHT PROJECTS BUILDING

NATIONAL AERONAUTICS AND SPACE ADMINISTRATION
GODDARD SPACE FLIGHT CENTER GREENBELT, MARYLAND
FACILITIES MANAGEMENT DIVISION

DATE ISSUED	CoF CODE OR WR#	AECOM PROJECT NO.	SCALE
10/12/2012	12GXAZ	60187636	As indicated

FILE DATE: 10/10/2012 3:25:50 PM

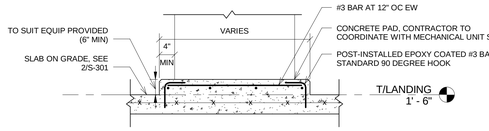

NOTES:

1. SEE PLAN FOR SLAB ON GRADE THICKNESS

16 MECHANICAL PAD ON SLAB-ON-GRADE

S-302 REF. S-101b SCALE: 3/4" = 1'-0"

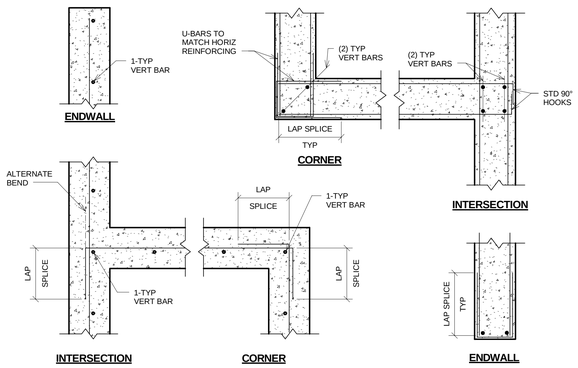

15 TYPICAL REINFORCING AT WALL INTERSECTIONS

S-302 REF. SCALE: 1" = 1'-0"

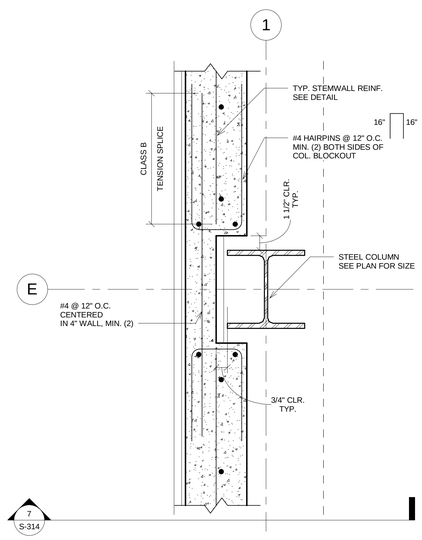

14 STEMWALL BLOCKOUT AT COLUMNS

S-302 REF. S-101a SCALE: 1 1/2" = 1'-0"

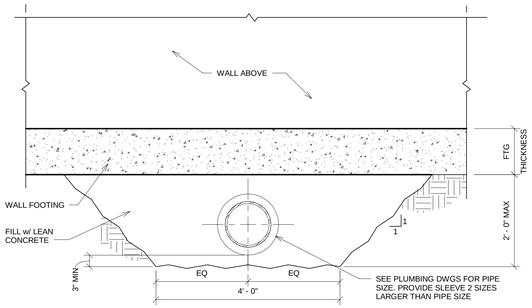

13 TYPICAL DETAIL AT UTILITY PIPE BELOW WALL FOOTING

S-302 REF. SCALE: 3/4" = 1'-0"

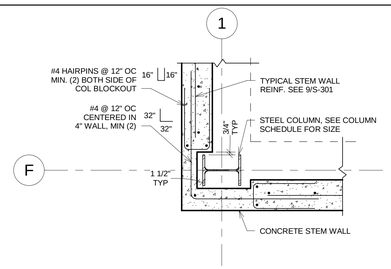

12 STEMWALL BLOCKOUT AT CORNER COLUMN

S-302 REF. S-101a SCALE: 3/4" = 1'-0"

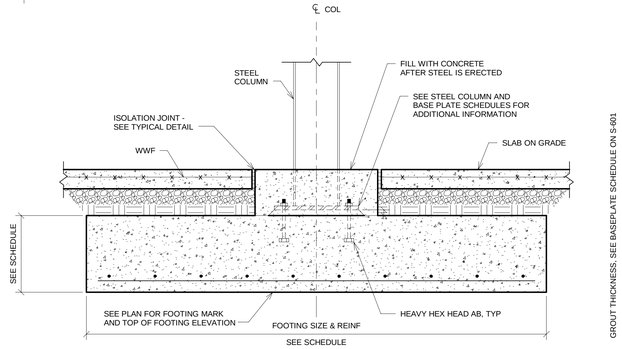

GROUT THICKNESS; SEE BASEPLATE SCHEDULE ON S-601

11 TYPICAL INTERIOR COLUMN FOUNDATION DETAIL

S-302 REF. S-101a SCALE: 3/4" = 1'-0"

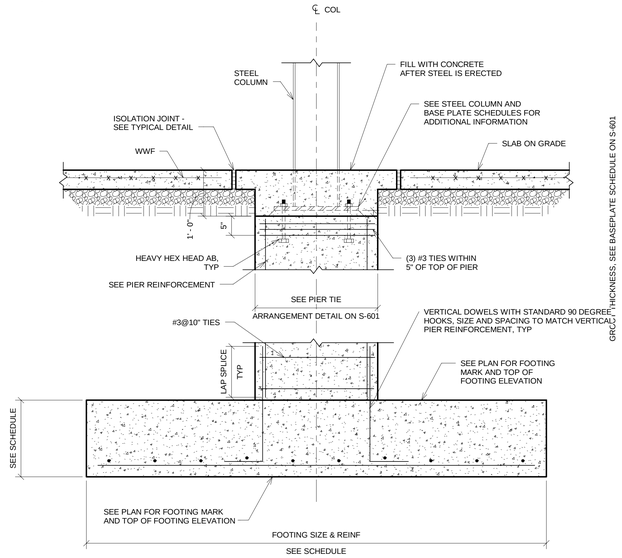

GROUT THICKNESS; SEE BASEPLATE SCHEDULE ON S-601

10 COLUMN w/ PIER FOUNDATION DETAIL

S-302 REF. S-101a SCALE: 3/4" = 1'-0"

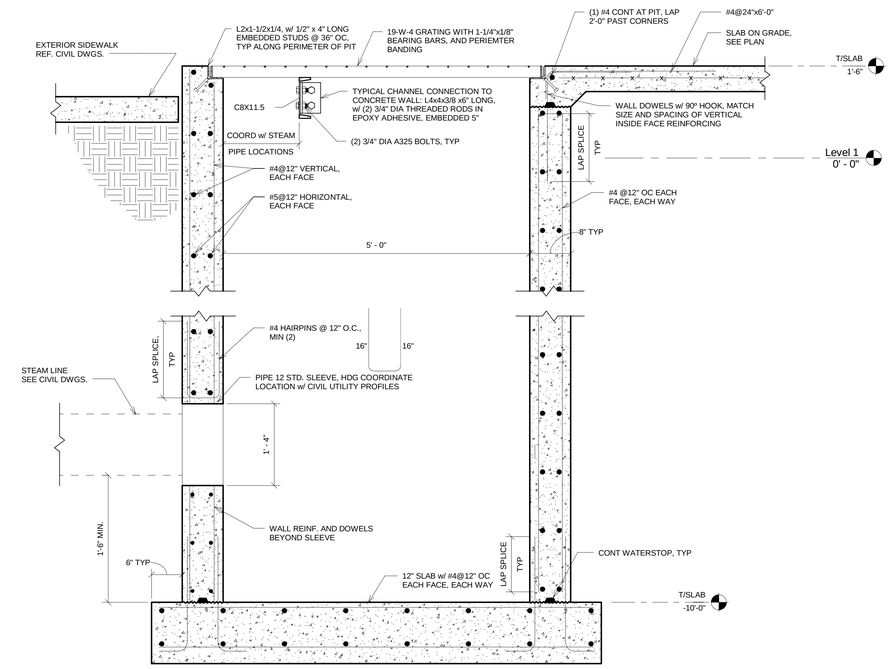

7 STEAM PIPE ENTRY PIT

S-302 REF. S-101b SCALE: 1" = 1'-0"

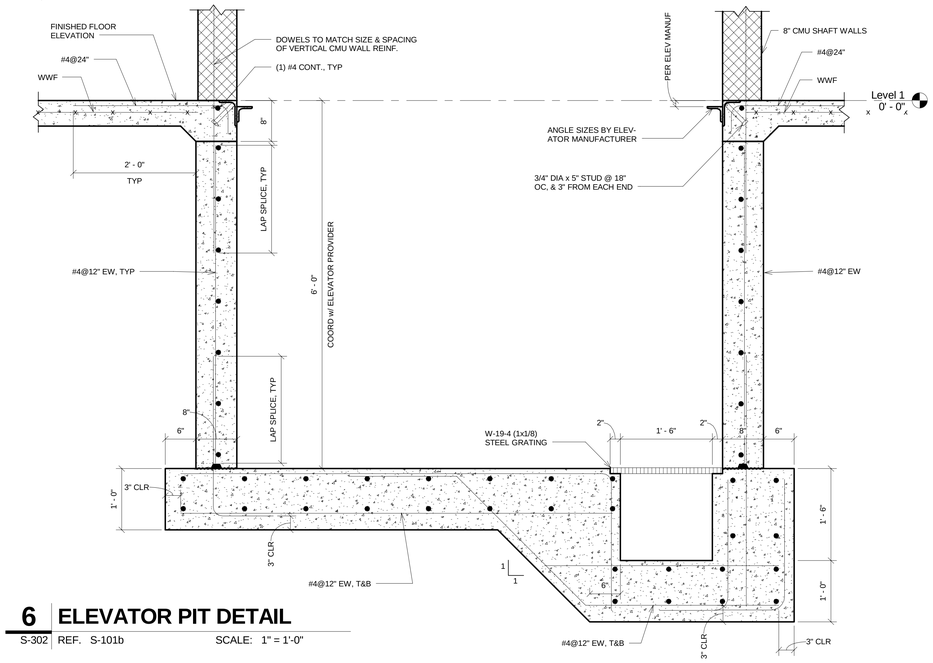

6 ELEVATOR PIT DETAIL

S-302 REF. S-101b SCALE: 1" = 1'-0"

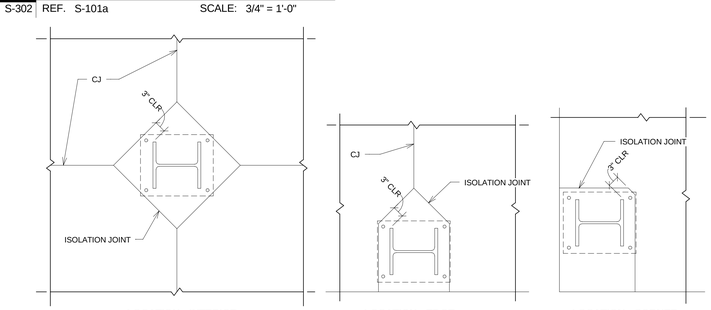

LOCATION: INTERIOR LOCATION: EDGE LOCATION: CORNER

9 TYPICAL ISOLATION JOINT

S-302 REF. SCALE: 3/4" = 1'-0"

100% SUBMITTAL

AECOM

AECOM TECHNICAL SERVICES, INC.
3101 WILSON BOULEVARD
SUITE 900
ARLINGTON, VA 22201

T: 703-682-4900 F: 703.682.4901
www.aecom.com

SEAL AREA

STATE OF MARYLAND
THOMAS J. GILLIGAN
No. 30294
PROFESSIONAL ENGINEER

KEY PLAN

REV	DATE	DESCRIPTION	S&R BR.	CUSTOMER	PM	SECT. HEAD

	INITIALS	DATE
DRAWN BY	MJI	
CHECKED BY	KTB	
A-E MANAGER	EW	
ENVIRONMENTAL BRANCH	JH	
SAFETY BRANCH	CS	
CM	MMD	
PM	RWP	
CUSTOMER	JWB	
ENG. BRANCH	DGL	

Typical Foundation Details

S-302

FLIGHT PROJECTS BUILDING

NATIONAL AERONAUTICS AND SPACE ADMINISTRATION

GODDARD SPACE FLIGHT CENTER GREENBELT, MARYLAND
FACILITIES MANAGEMENT DIVISION

DATE ISSUED	CoF CODE OR WR#	AECOM PROJECT NO.	SCALE
10/12/2012	12GXAZ	60187636	As indicated

FILE DATE: 10/10/2012 3:25:55 PM

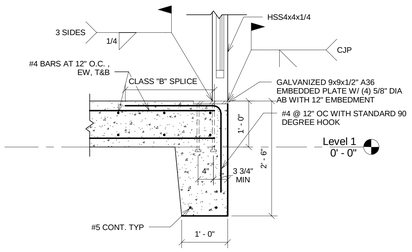

16 DUMPSTER POST EMBEDDED PLATE

S-303 REF. S-303 SCALE: 3/4" = 1'-0"

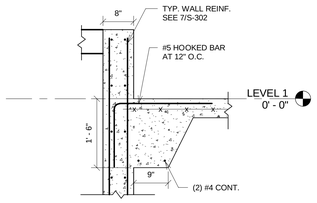

15 TURN-DOWN SLAB AT PIT WALL

S-303 REF. S-101b SCALE: 3/4" = 1'-0"

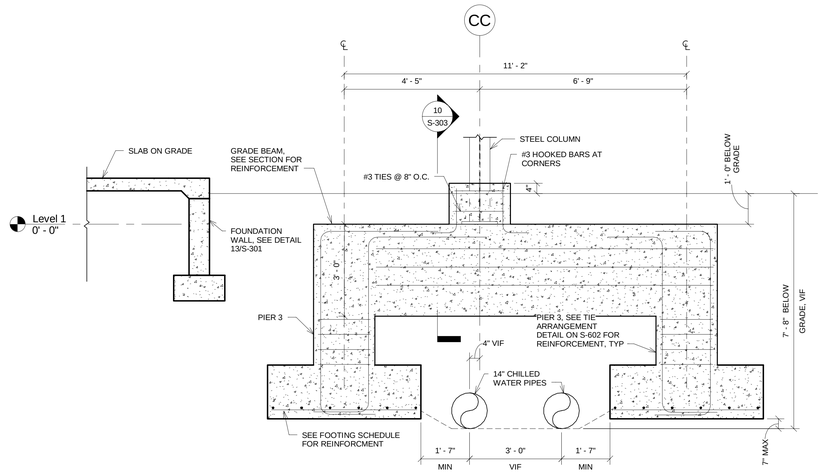

11 TRANSFER GRADE BEAM AT EXISTING UTILITY LINES

S-303 REF. S-101a SCALE: 1/2" = 1'-0"

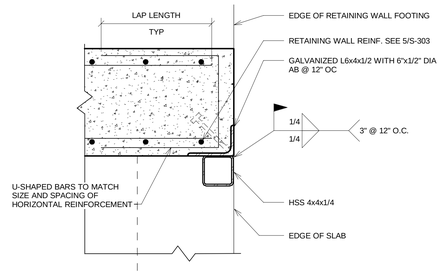

4 DUMPSTER POST CORNER CONNECTION

S-303 REF. S-303 SCALE: 1 1/2" = 1'-0"

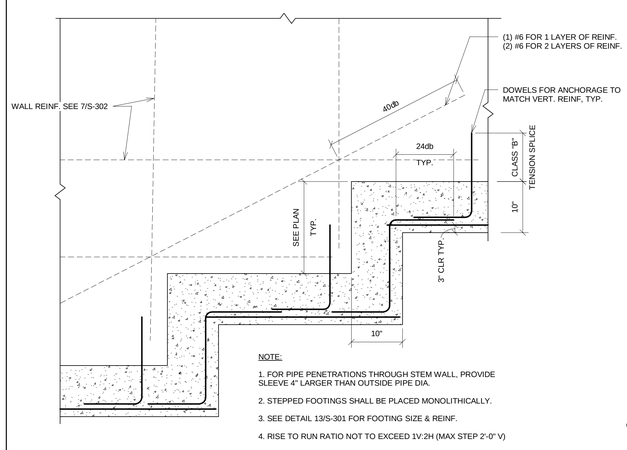

14 TYP. WALL FOOTING STEP

S-303 REF. SCALE: 1" = 1'-0"

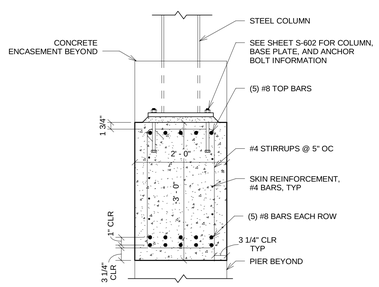

10 GRADE BEAM SECTION

S-303 REF. S-101a SCALE: 3/4" = 1'-0"

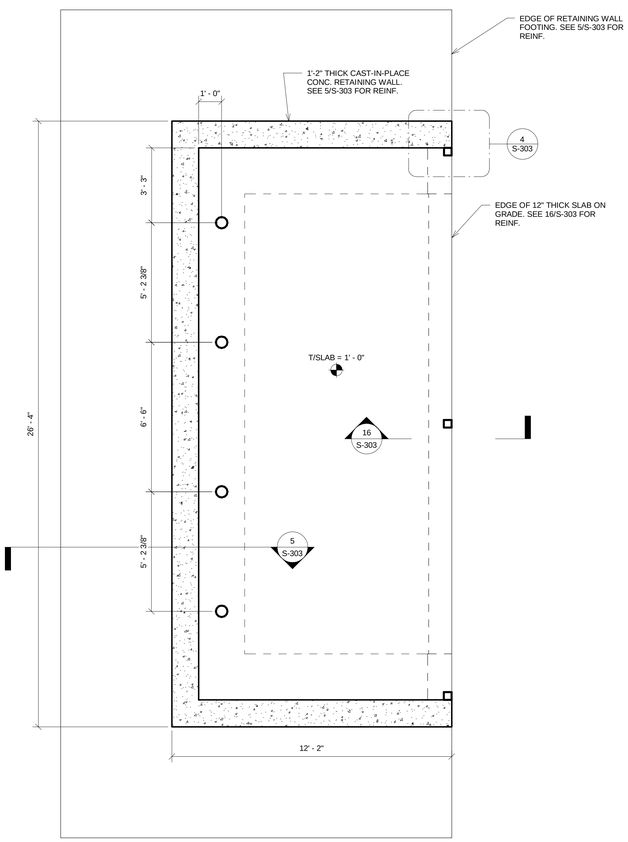

2 FOUNDATION PLAN AT DUMPSTER PAD

S-303 SCALE: 3/8" = 1'-0"

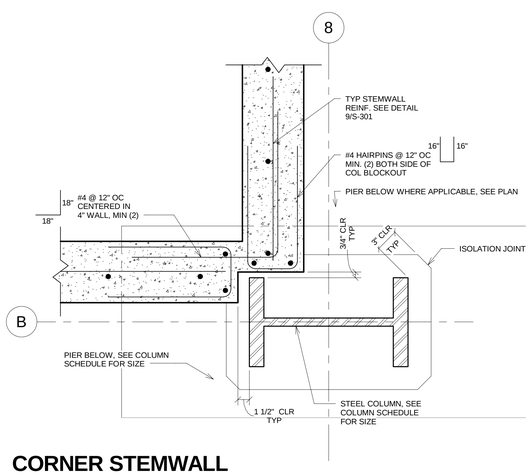

13 CORNER STEMWALL BLOCKOUT AT COLUMNS

S-303 REF. S-101a SCALE: 1 1/2" = 1'-0"

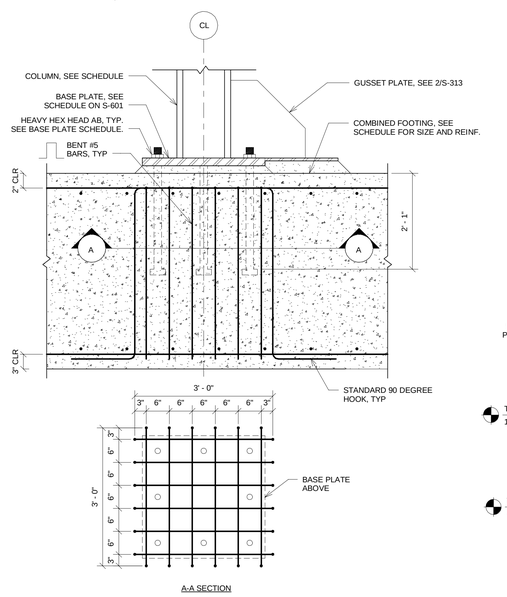

9 COMBINED FOOTING REINF.

S-303 REF. S-101a SCALE: 3/4" = 1'-0"

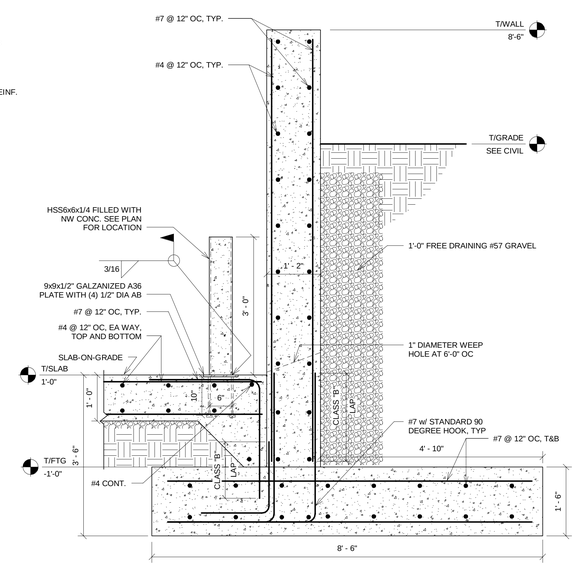

5 RETAINING WALL AT DUMPSTER PAD

S-303 REF. S-102b SCALE: 3/4" = 1'-0"

100% SUBMITTAL

AECOM

AECOM TECHNICAL SERVICES, INC.
3101 WILSON BOULEVARD
SUITE 900
ARLINGTON, VA 22201

T: 703-682-4900 F: 703.682.4901
www.aecom.com

SEAL AREA

STATE OF MARYLAND
THOMAS J. GILGER
No. 30294
PROFESSIONAL ENGINEER

KEY PLAN

REV	DATE	DESCRIPTION	S&R BR.	CUSTOMER	PM	SECT. HEAD

	INITIALS	DATE
DRAWN BY	MJI	
CHECKED BY	KTB	
A-E MANAGER	EW	
ENVIRONMENTAL BRANCH	JH	
SAFETY BRANCH	CS	
CM	MMD	
PM	RWP	
CUSTOMER	JWB	
ENG. BRANCH	DGL	

Typical Foundation Details

S-303

FLIGHT PROJECTS BUILDING

NATIONAL AERONAUTICS AND SPACE ADMINISTRATION
GODDARD SPACE FLIGHT CENTER GREENBELT, MARYLAND
FACILITIES MANAGEMENT DIVISION

DATE ISSUED	CoF CODE OR WR#	AECOM PROJECT NO.	SCALE
10/12/2012	12GXAZ	60187636	As indicated

FILE DATE: 10/10/2012 3:26:00 PM

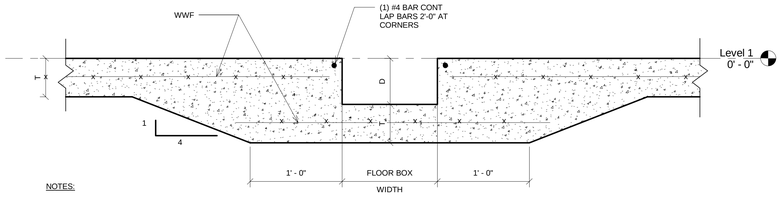

NOTES:

1. SEE PLAN FOR FLOOR BOX LOCATIONS
2. SEE TYPICAL SLAB ON GRADE DETAIL, SHEET S-301, FOR SLAB DETAILS NOT SHOWN.
3. COORDINATE DEPTH OF DEPRESSION WITH FLOOR BOXES TO BE INSTALLED.
4. SEE FOUNDATION PLAN FOR SLAB THICKNESS.

8 TYPICAL FLOOR BOX DEPRESSION

S-304 REF. S-101a SCALE: 1 1/2" = 1'-0"

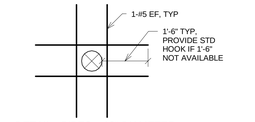

DETAIL - PIPES ≤ 18" DIAMETER

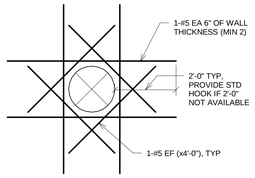

DETAIL - PIPES > 18" DIAMETER

4 TYP PIPE OPNG IN CONC WALL

S-304 REF. SCALE: 1/2" = 1'-0"

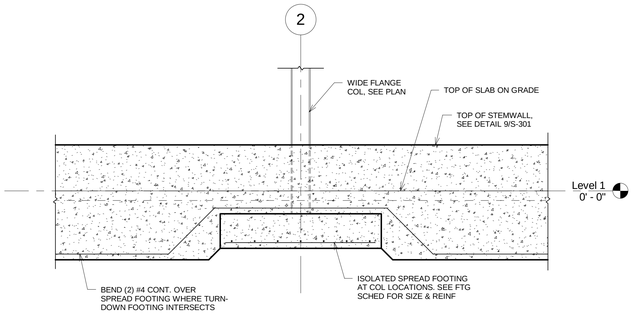

7 TURN-DOWN AT TOP OF SPREAD FOOTING EL=-1'-0"

S-304 REF. S-101a SCALE: 3/8" = 1'-0"

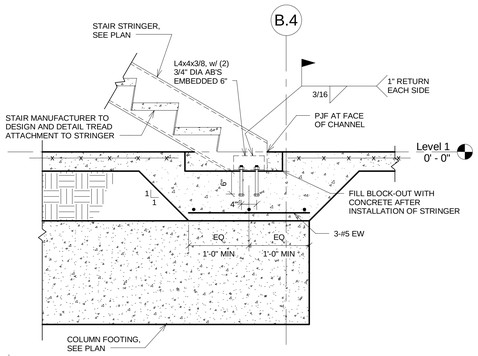

3 STAIR #1 & #2 CONNECTION

S-304 REF. S-501 SCALE: 3/4" = 1'-0"

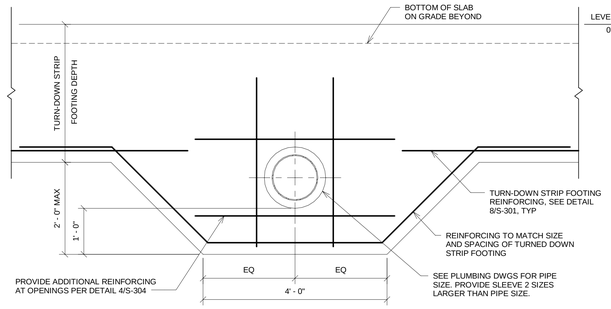

NOTE:

1. FOR PIPES BELOW BOTTOM OF TURN-DOWN STRIP FOOTING, SEE DETAIL 13/S-302.

6 TYP DETAIL AT UTILITY PIPE THROUGH TURN-DOWN FTG

S-304 REF. SCALE: 3/4" = 1'-0"

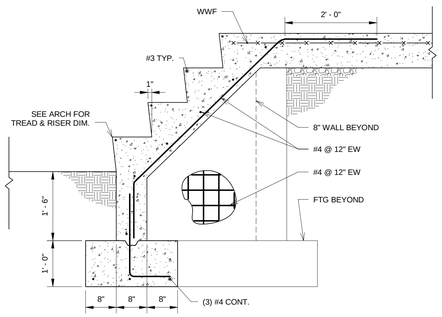

2 CONCRETE STAIR-ON-GRADE w/ CHEEK WALL

S-304 REF. SCALE: 3/4" = 1'-0"

100% SUBMITTAL

AECOM

AECOM TECHNICAL SERVICES, INC.
3101 WILSON BOULEVARD
SUITE 900
ARLINGTON, VA 22201

T: 703-682-4900 F: 703.682.4901
www.aecom.com

SEAL AREA

STATE OF MARYLAND
THOMAS J. GULASS
No. 36204
PROFESSIONAL ENGINEER

KEY PLAN

REV	DATE	DESCRIPTION	S&R BR.	CUSTOMER	PM	SECT. HEAD

	INITIALS	DATE
DRAWN BY	MJI	
CHECKED BY	KTB	
A-E MANAGER	EW	
ENVIRONMENTAL BRANCH	JH	
SAFETY BRANCH	CS	
CM	MMD	
PM	RWP	
CUSTOMER	JWB	
ENG. BRANCH	DGL	

Typical Foundation Details

S-304

FLIGHT PROJECTS BUILDING

NATIONAL AERONAUTICS AND SPACE ADMINISTRATION

GODDARD SPACE FLIGHT CENTER GREENBELT, MARYLAND
FACILITIES MANAGEMENT DIVISION

DATE ISSUED	CoF CODE OR WR#	AECOM PROJECT NO.	SCALE
10/12/2012	12GXAZ	60187636	As indicated

FILE DATE: 10/10/2012 3:26:02 PM

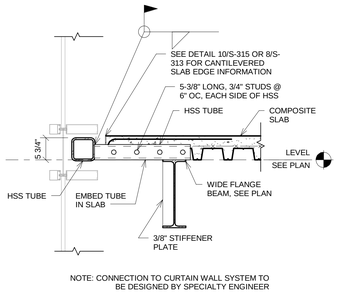

16 SECTION AT FIN SUPPORT

S-311 REF. S-315 SCALE: 3/4" = 1'-0"

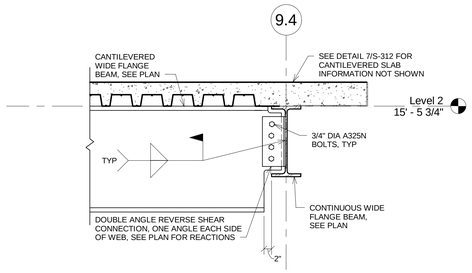

12 REVERSE SHEAR CONN AT CANTILEVER

S-311 REF. S-102b SCALE: 3/4" = 1'-0"

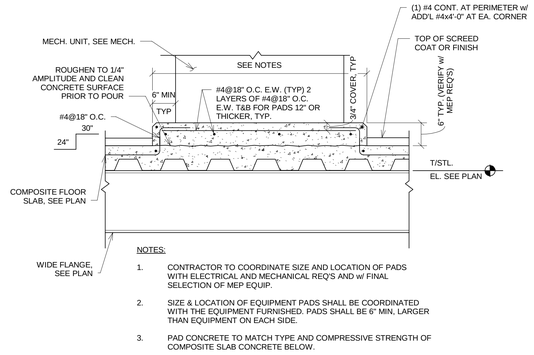

NOTES:

1. CONTRACTOR TO COORDINATE SIZE AND LOCATION OF PADS WITH ELECTRICAL AND MECHANICAL REQ'S AND w/ FINAL SELECTION OF MEP EQUIP.
2. SIZE & LOCATION OF EQUIPMENT PADS SHALL BE COORDINATED WITH THE EQUIPMENT FURNISHED. PADS SHALL BE 6" MIN, LARGER THAN EQUIPMENT ON EACH SIDE.
3. PAD CONCRETE TO MATCH TYPE AND COMPRESSIVE STRENGTH OF COMPOSITE SLAB CONCRETE BELOW.

8 HOUSEKEEPING PAD DETAIL

S-311 REF. SCALE: 3/4" = 1'-0"

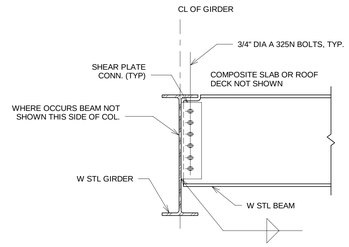

4 TYP. SHEAR CONNECTION @ BEAM

S-311 REF. SCALE: 3/4" = 1'-0"

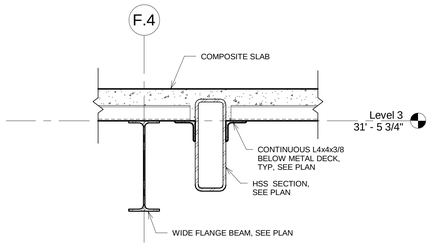

15 SECTION

S-311 REF. S-311 SCALE: 1" = 1'-0"

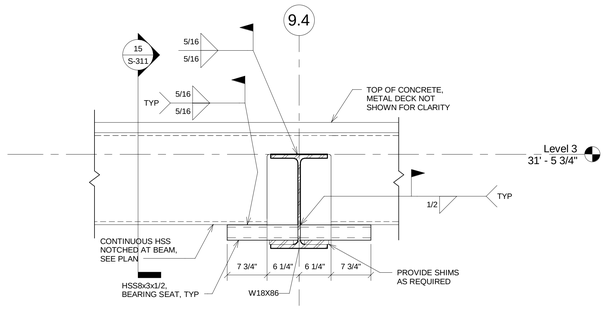

SECTION

11 HSS CANTILEVER CONNECTION @ LEVEL 3

S-311 REF. S-103b SCALE: 1" = 1'-0"

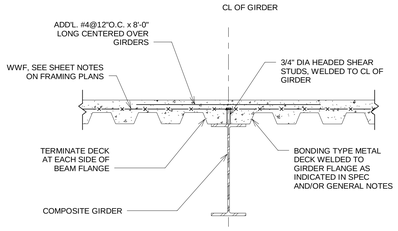

7 TYP. COMPOSITE GIRDER

S-311 REF. SCALE: 3/4" = 1'-0"

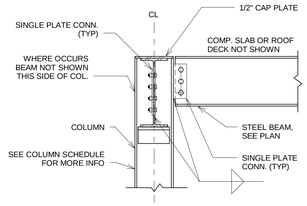

3 TYP. SHEAR CONNECTION TOP LEVEL

S-311 REF. SCALE: 3/4" = 1'-0"

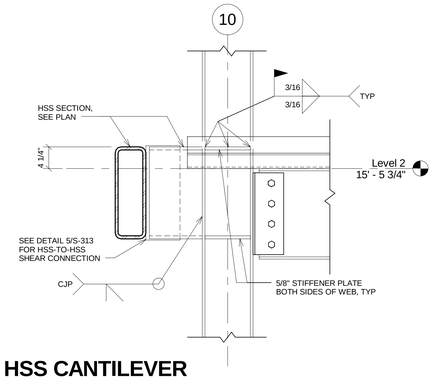

14 HSS CANTILEVER CONNECTION AT COLUMN

S-311 REF. S-102b SCALE: 1" = 1'-0"

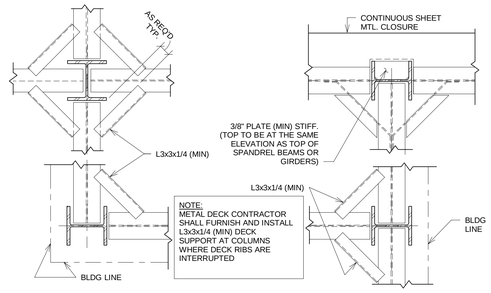

10 COMPOSITE DECK SUPPORT @ COL.

S-311 REF. SCALE: 3/4" = 1'-0"

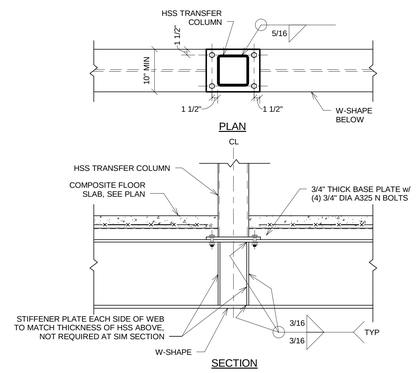

SECTION

6 TYP. TRANSFER COLUMN

S-311 REF. S-105a SCALE: 3/4" = 1'-0"

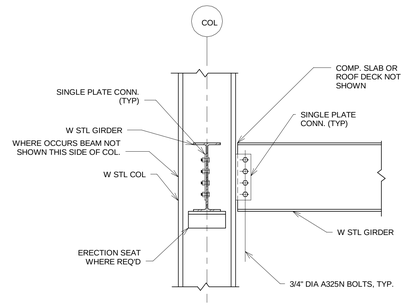

2 TYP. SHEAR CONNECTIONS @ COL

S-311 REF. SCALE: 3/4" = 1'-0"

SHEAR STUD PLACEMENT NOTES:

1. ALL SHEAR STUDS TO BE 3/4" DIA. 5-3/8" TALL UNLESS NOTED OTHERWISE.
2. THE NUMBER OF STUDS IS INDICATED THUS (XX) ON THE PLAN. WHEN MORE THAN ONE QUANTITY OF STUDS ARE INDICATED ON THE BEAM. STUDS SHALL BE PLACED IN CORRESPONDING GROUPS BETWEEN INTERSECTING MEMBERS AND/OR SUPPORTING MEMBERS.
3. MINIMUM CENTER TO CENTER SPACING OF STUDS ALONG THE LONGITUDINAL AXIS OF THE COMPOSITE BEAM SHALL BE 41/2" AND THE MAXIMUM CENTER TO CENTER SPACING SHALL BE 12". ALONG THE TRANSVERSE AXIS THE CENTER TO CENTER SPACING SHALL BE 3".
4. WHERE DECK IS PERPENDICULAR TO THE COMPOSITE BEAM, STUDS SHALL BE PLACED AS FOLLOWS:

   CASE #1: (MORE DECK FLUTES THAN STUDS) PLACE ONE STUD IN EVERY OTHER DECK FLUTE. THEN STARTING AT EACH END OF THE BEAM, PLACE REMAINING STUDS IN UNUSED DECK FLUTES. THE NUMBER OF STUDS ON EACH HALF OF THE BEAM SHOULD BE EQUAL. SEE NOTE 3 FOR SPACING LIMITATIONS.

   CASE #2: (MORE STUDS THAN DECK FLUTES) PLACE ONE STUD IN EVERY DECK FLUTE. THEN STARTING AT EACH END OF THE BEAM, DOUBLE STUD EVERY DECK FLUTE UNTIL REMAINING STUDS ARE USED. THE NUMBER OF STUDS ON EACH HALF OF THE BEAM SHOULD BE EQUAL. SEE NOTE 3 FOR SPACING LIMITATIONS.

5. WHERE DECK IS PARALLEL TO THE COMPOSITE BEAM THE STUDS SHALL BE UNIFORMLY SPACED IN A SINGLE ROW. IF THE STUDS CANNOT BE SPACED AT 4 1/2" CENTER TO CENTER OR GREATER IN A SINGLE ROW, THE STUDS SHALL BE UNIFORMLY SPACED IN A DOUBLE ROW.
6. COMPOSITE BEAM NOTATION: (KEY VALUES AND SIZES SHOWN FOR ILLUSTRATION PURPOSES ONLY)

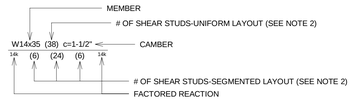

13 SHEAR STUD PLACEMENT NOTES

S-311 REF. SCALE: NTS

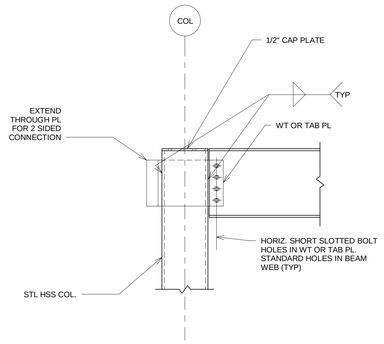

9 TYP. HSS SHEAR CONNECTION TOP LEVEL

S-311 REF. SCALE: 3/4" = 1'-0"

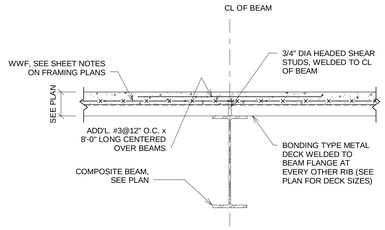

5 TYP. COMPOSITE BEAM

S-311 REF. SCALE: 3/4" = 1'-0"

100% SUBMITTAL

AECOM
AECOM TECHNICAL SERVICES, INC.
3101 WILSON BOULEVARD
SUITE 900
ARLINGTON, VA 22201
T: 703-682-4900 F: 703.682.4901
www.aecom.com

SEAL AREA

STATE OF MARYLAND — THOMAS J. GILLASPIE — No. 34024 — PROFESSIONAL ENGINEER

KEY PLAN

REV	DATE	DESCRIPTION	S&R BR.	CUSTOMER	PM	SECT. HEAD

	INITIALS	DATE
DRAWN BY	MJI	
CHECKED BY	KTB	
A-E MANAGER	EW	
ENVIRONMENTAL BRANCH	JH	
SAFETY BRANCH	CS	
CM	MMD	
PM	RWP	
CUSTOMER	JWB	
ENG. BRANCH	DGL	

Steel Connection Details

S-311

FLIGHT PROJECTS BUILDING

NATIONAL AERONAUTICS AND SPACE ADMINISTRATION

GODDARD SPACE FLIGHT CENTER GREENBELT, MARYLAND
FACILITIES MANAGEMENT DIVISION

DATE ISSUED	CoF CODE OR WR#	AECOM PROJECT NO.	SCALE
10/12/2012	12GXAZ	60187636	As indicated

FILE DATE: 10/10/2012 3:26:06 PM

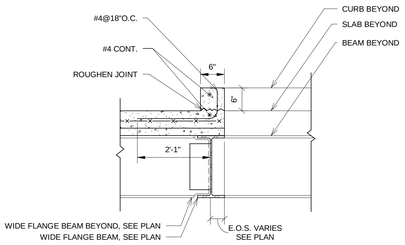

16 DETAIL OF CONCRETE CURB AT OPENING

S-312 REF. SCALE: 3/4" = 1'-0"

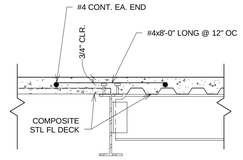

NOTE:

1. SUPPORT REBAR WITH CHAIRS ABOVE FLOOR DECK.

12 TYP. CHANGE IN DECK SPAN DETAIL

S-312 REF. S-102a SCALE: NTS

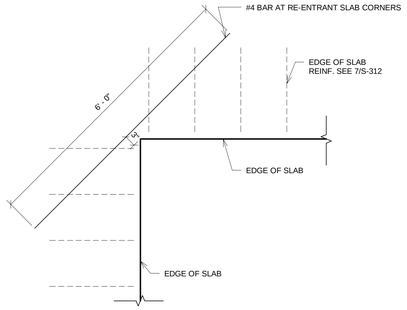

8 RE-ENTRANT CORNER REINF

S-312 REF. SCALE: 3/4" = 1'-0"

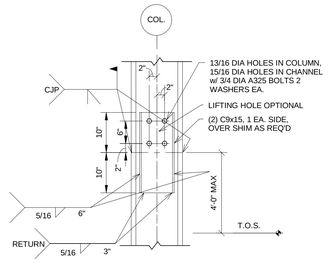

4 TYP. COLUMN SPLICE MOMENT CONNECTION

S-312 REF. SCALE: 3/4" = 1'-0"

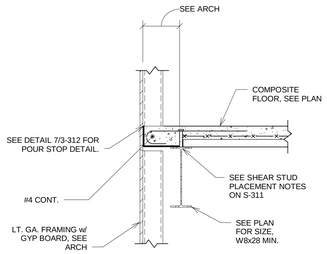

15 TYP. EDGE CONDITION @ OPENING

S-312 REF. S-102a SCALE: 3/4" = 1'-0"

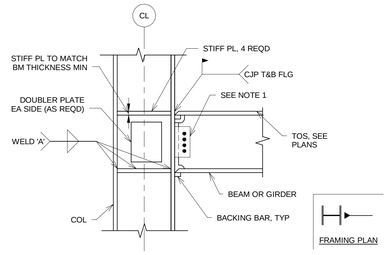

NOTES:

1. SHEAR CONN. AT COMPOSITE BEAMS AND GIRDERS SHALL BE DESIGNED FOR REACTIONS AS SCHEDULED.
2. STIFF PLATES REQD FOR WEAK AXIS MOMENT CONNS ACT AS EFFECTIVE STIFF PLATES FOR STRONG-AXIS MOMENT CONNS.
3. ONE-SIDED MOMENT CONNS SHOWN; MULTIPLE CONNS SHALL BE SIMILAR.
4. SHEAR PLATE THICKNESS AT WEAK-AXIS MOMENT CONNECTIONS SHALL MATCH THE WEB THICKNESS OF THE BEAM OR GIRDER FRAMING INTO THE COLUMN.
5. AT CONTRACTORS OPTION, HORIZONTAL SHORT SLOTTED BOLT HOLES MAY BE USED IN TAB OR WT TAB PLATE. STANDARD BOLT HOLES MUST BE USED IN BEAM WEB.

11 TYP. STRONG-AXIS MOMENT CONNECTION

S-312 REF. SCALE: NTS

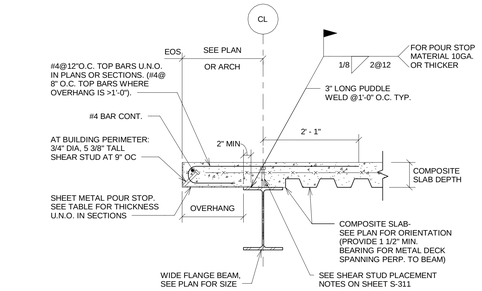

POUR STOP SCHEDULE		
OVERHANG	GAGE	THICKNESS
0" TO 6"	14	0'-0.0747"
>6" TO 9"	12	0'-0.1046"
>9" TO 1'-0"	10	0'-0.1345"
>1'-0" TO 1'-4"	-	0'-0.1875"
>1'-4" TO 1'-7"	-	0'-0.2500"
>1'-7" TO 1'-10"	-	0'-0.3750"

7 TYP. CANTILEVERED SLAB DETAIL

S-312 REF. S-102a SCALE: 3/4" = 1'-0"

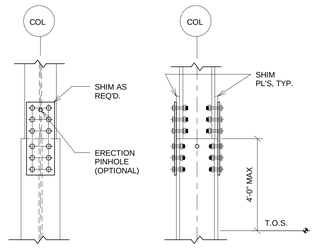

3 TYP. BOLTED COL. SPLICE DETAIL

S-312 REF. SCALE: 3/4" = 1'-0"

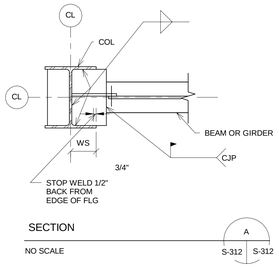

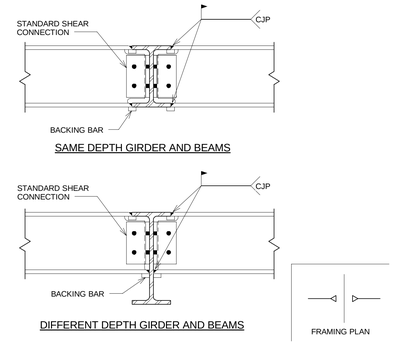

10 TYP. MOMENT CONNECTION AT BEAM

S-312 REF. SCALE: NTS

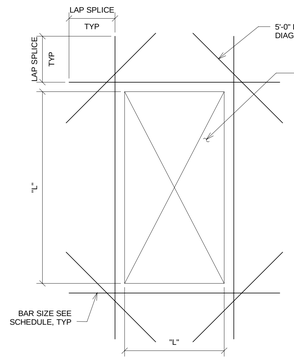

FLOOR OPENING SCHEDULE	
"L"	REINFORCEMENT
TO 10"	NO ADDITIONAL REINFORCING REQUIRED
10" TO 16"	(1) #4
16" TO 24"	(1) #5
24" TO 30"	(2) #5
OVER 30"	REQUIRES STRUCTURAL STEEL FRAME

"L" IS MEASURED PERPENDICULAR TO FLOOR DECK SPAN, GREATER "L" DIMENSION CONTROLS

6 TYP. FLOOR SLAB ON DECK REINFORCING DETAIL

S-312 REF. SCALE: NTS

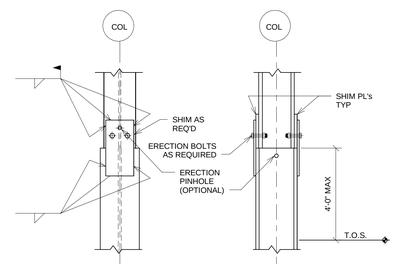

2 TYP. WELDED COL. SPLICE DETAIL

S-312 REF. SCALE: 3/4" = 1'-0"

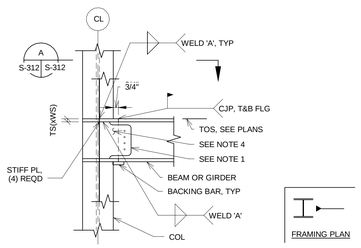

NOTES:

1. SHEAR CONN AT COMPOSITE BEAMS AND GIRDERS SHALL BE DESIGNED FOR REACTIONS AS SCHEDULED.
2. STIFF PLATES REQD FOR WEAK AXIS MOMENT CONNS ACT AS EFFECTIVE STIFF PLATES FOR STRONG-AXIS MOMENT CONNS.
3. ONE SIDED MOMENT CONNS SHOWN; MULTIPLE CONNS SHALL BE SIMILAR.
4. SHEAR PLATE THICKNESS AT WEAK-AXIS MOMENT CONNECTIONS SHALL MATCH THE WEB THICKNESS OF THE BEAM OR GIRDER FRAMING INTO THE COLUMN.
5. AT CONTRACTORS OPTION, HORIZONTAL SHORT SLOTTED BOLT HOLES MAY BE USED IN TAB OR WT TAB PLATE. STANDARD BOLT HOLES MUST BE USED IN BEAM WEB.

13 TYP. WEAK-AXIS MOMENT CONNECTION

S-312 REF. SCALE: NTS

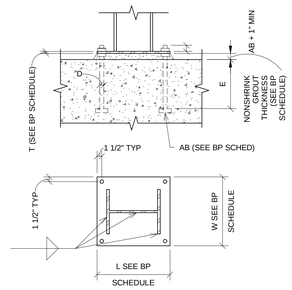

9 TYP. STEEL GRAVITY COLUMN BASE PLATE DETAIL

S-312 REF. SCALE: 12" = 1'-0"

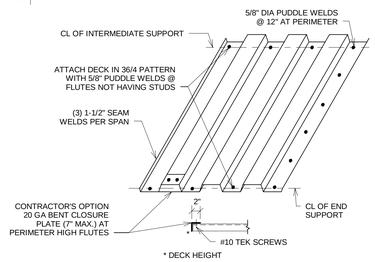

5 TYP. COMPOSITE FLOOR DECK ATTACHMENT DETAIL

S-312 REF. SCALE: NTS

100% SUBMITTAL

AECOM

AECOM TECHNICAL SERVICES, INC.
3101 WILSON BOULEVARD
SUITE 900
ARLINGTON, VA 22201

T: 703-682-4900 F: 703.682.4901
www.aecom.com

SEAL AREA

STATE OF MARYLAND — THOMAS J. GILLASPIE — NO. 21020A — PROFESSIONAL ENGINEER

KEY PLAN

REV	DATE	DESCRIPTION	S&R BR.	CUSTOMER	PM	SECT. HEAD

	INITIALS	DATE
DRAWN BY	MJI	
CHECKED BY	KTB	
A-E MANAGER	EW	
ENVIRONMENTAL BRANCH	JH	
SAFETY BRANCH	CS	
CM	MMD	
PM	RWP	
CUSTOMER	JWB	
ENG. BRANCH	DGL	

Steel Connection Details

S-312

FLIGHT PROJECTS BUILDING

NATIONAL AERONAUTICS AND SPACE ADMINISTRATION

GODDARD SPACE FLIGHT CENTER GREENBELT, MARYLAND
FACILITIES MANAGEMENT DIVISION

DATE ISSUED	CoF CODE OR WR#	AECOM PROJECT NO.	SCALE
10/12/2012	12GXAZ	60187636	As indicated

FILE DATE: 10/10/2012 3:26:08 PM

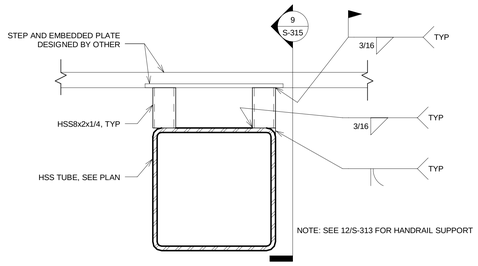

16 MONUMENTAL STAIR TREAD

S-313 REF. SCALE: 1 1/2" = 1'-0"

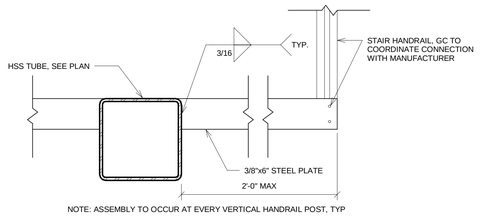

12 HANDRAIL SUPPORT AT STAIRS

S-313 REF. SCALE: 1" = 1'-0"

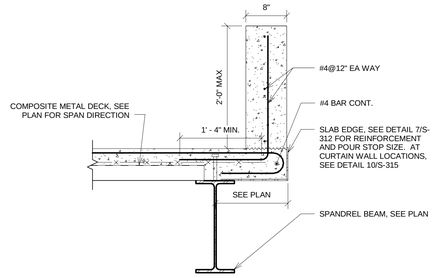

8 TYP. ROOF SLAB EDGE

S-313 REF. S-103a SCALE: 1" = 1'-0"

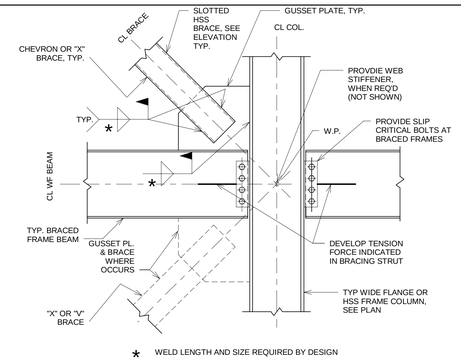

4 TYP. HSS BRACED FRAME CONN. AT BEAM-COL. JOINT

S-313 REF. SCALE: 3/4" = 1'-0"

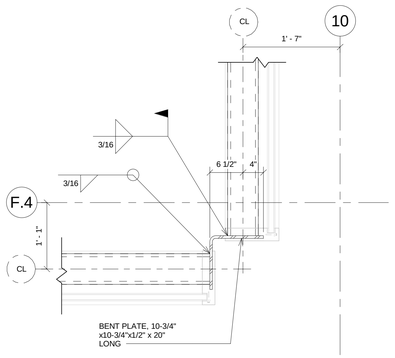

15 CURTAIN WALL CORNER CONNECTION @ LEVEL 3

S-313 REF. S-103a SCALE: 1" = 1'-0"

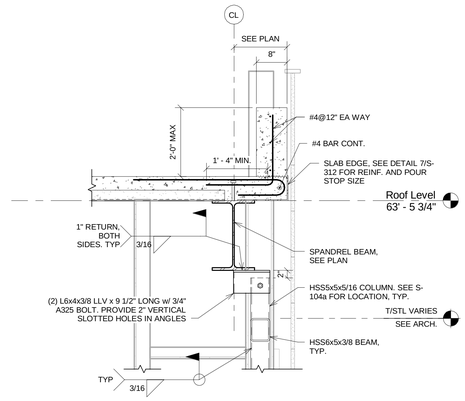

11 NORTH/SOUTH ROOF EDGE

S-313 REF. S-105a SCALE: 3/4" = 1'-0"

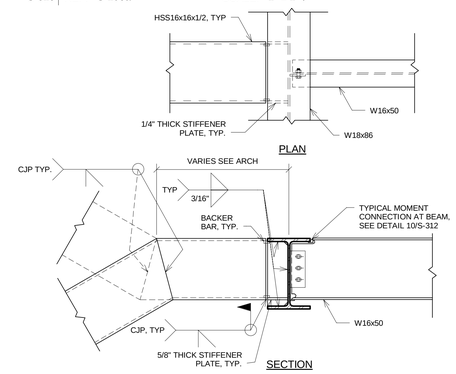

7 TYPICAL MONUMENTAL STAIR CONNECTION

S-313 REF. S-102a SCALE: 3/4" = 1'-0"

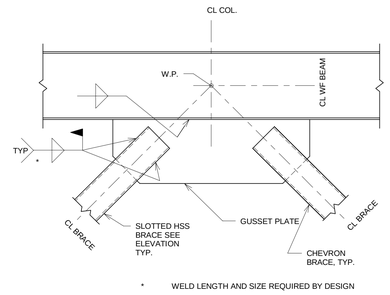

3 TYP. HSS BRACED FRAME CONN. AT BEAM

S-313 REF. SCALE: 3/4" = 1'-0"

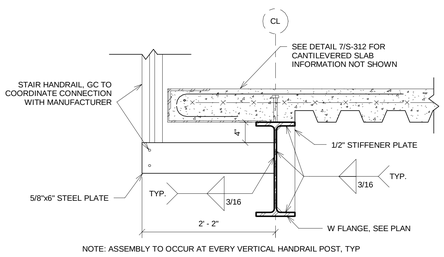

14 HANDRAIL SUPPORT CONNECTION AT W FLANGE

S-313 REF. S-102a SCALE: 1" = 1'-0"

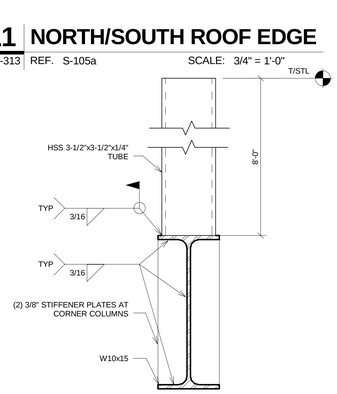

10 LOW WALL COLUMN CONNECTION

S-313 REF. S-102a SCALE: 3" = 1'-0"

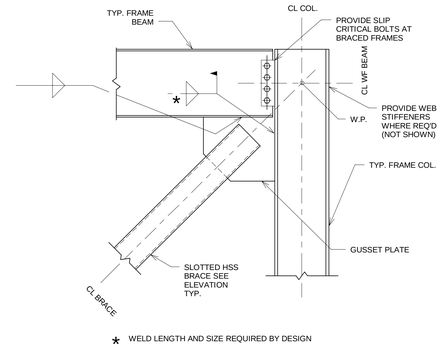

6 TYP. HSS BRACED FRAME CORNER CONN.

S-313 REF. SCALE: 3/4" = 1'-0"

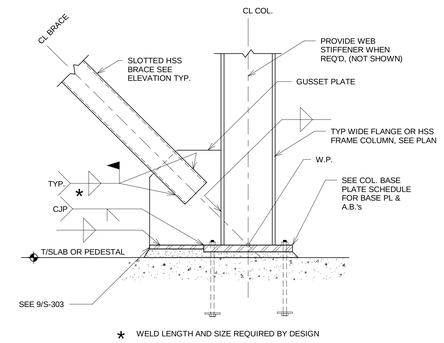

2 TYP. HSS BRACED FRAME CONN. AT FOUNDATION

S-313 REF. SCALE: 3/4" = 1'-0"

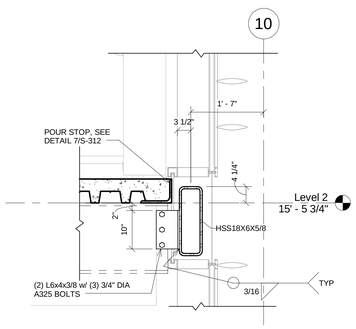

13 CURTAIN WALL SUPPORT @ MONUMENTAL STAIR

S-313 REF. S-102a SCALE: 3/4" = 1'-0"

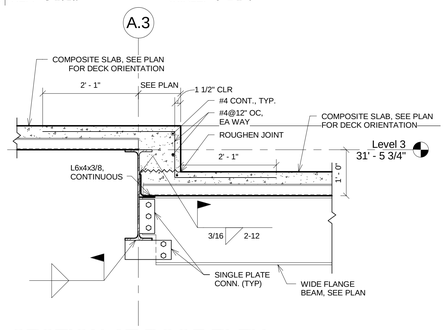

9 SECTION AT ROOF ELEV. CHANGE

S-313 REF. S-103b SCALE: 3/4" = 1'-0"

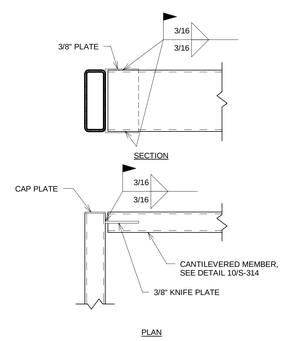

5 HSS-TO-HSS SHEAR CONNECTION

S-313 REF. S-501 SCALE: 1" = 1'-0"

100% SUBMITTAL

AECOM

AECOM TECHNICAL SERVICES, INC.
3101 WILSON BOULEVARD
SUITE 900
ARLINGTON, VA 22201

T: 703-682-4900 F: 703.682.4901
www.aecom.com

SEAL AREA

STATE OF MARYLAND THOMAS J. GILLIGAN No. 31293 PROFESSIONAL ENGINEER

KEY PLAN

REV	DATE	DESCRIPTION	S&R BR.	CUSTOMER	PM	SECT. HEAD

	INITIALS	DATE
DRAWN BY	MJI	
CHECKED BY	KTB	
A-E MANAGER	EW	
ENVIRONMENTAL BRANCH	JH	
SAFETY BRANCH	CS	
CM	MMD	
PM	RWP	
CUSTOMER	JWB	
ENG. BRANCH	DGL	

Steel Connection Details

S-313

FLIGHT PROJECTS BUILDING

NATIONAL AERONAUTICS AND SPACE ADMINISTRATION

GODDARD SPACE FLIGHT CENTER GREENBELT, MARYLAND
FACILITIES MANAGEMENT DIVISION

DATE ISSUED	CoF CODE OR WR#	AECOM PROJECT NO.	SCALE
10/12/2012	12GXAZ	60187636	As indicated

FILE DATE: 10/10/2012 3:26:11 PM

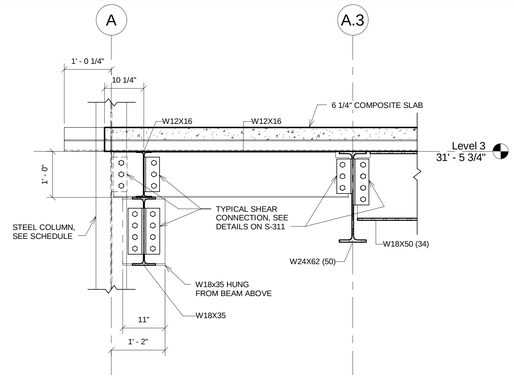

12 SECTION

S-314 REF. S-314 SCALE: 3/4" = 1'-0"

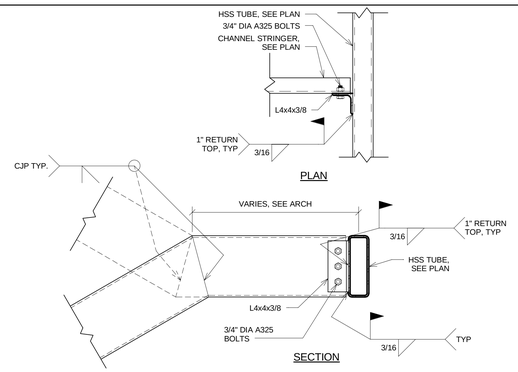

8 TYPICAL TOWER STAIR CONNECTION

S-314 REF. S-501 SCALE: 1" = 1'-0"

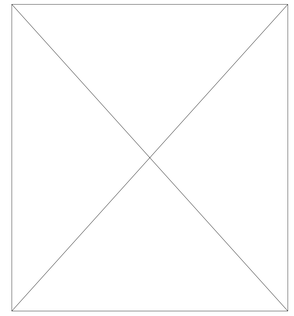

4 NOT USED

S-314 REF. SCALE: 1 1/2" = 1'-0"

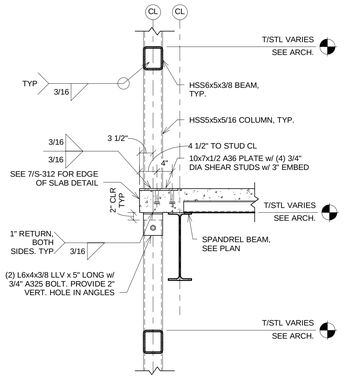

15 TYP. WINDOW SECTION AT NORTH AND SOUTH FACADE

S-314 REF. S-101a SCALE: 3/4" = 1'-0"

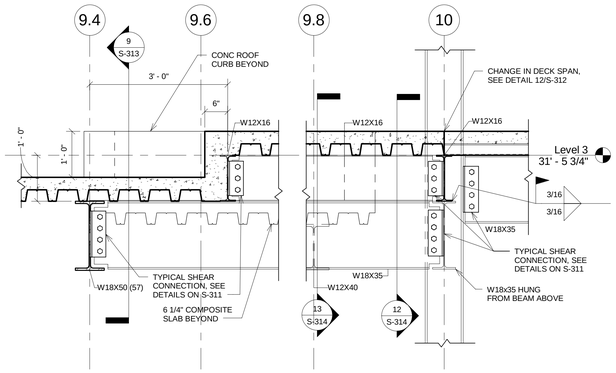

11 SECTION

S-314 REF. S-103b SCALE: 3/4" = 1'-0"

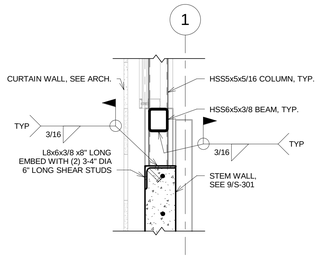

7 HSS CONNECTION TO STEM WALL

S-314 REF. S-101a SCALE: 3/4" = 1'-0"

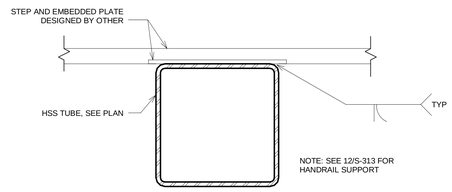

3 MONUMENTAL STAIR LANDING

S-314 REF. SCALE: 1 1/2" = 1'-0"

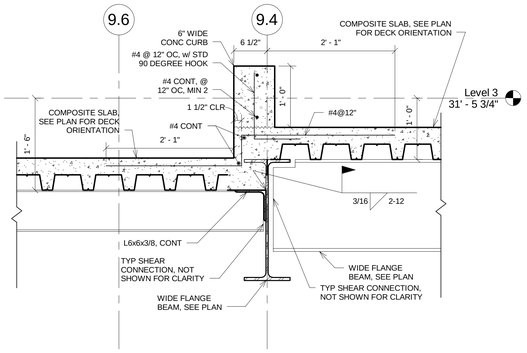

14 SECTION

S-314 REF. S-103a SCALE: 1" = 1'-0"

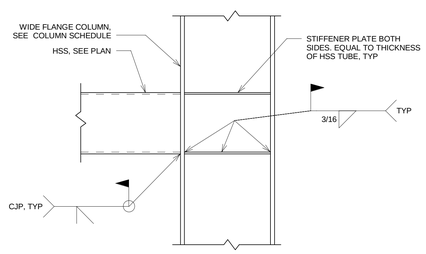

10 HSS TO FLANGE MOMENT CONNECTION

S-314 REF. SCALE: 1" = 1'-0"

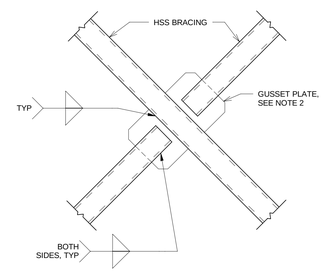

NOTES:
1. SEE FRAME ELEVATION FOR BRACING SIZE AND LOADS.
2. PROVIDE ONE CONTINUOUS THROUGH PLATE IN LIEU OF TWO SEPERATE PLATES IF CONTINUOUS BRACE MEMBER IS NOT ADEQUATE TO SUPPORT BRACE LOAD WITH DETAIL AS SHOWN.

6 TYP. TUBE CROSS BRACING DETAIL

S-314 REF. SCALE: 3/4" = 1'-0"

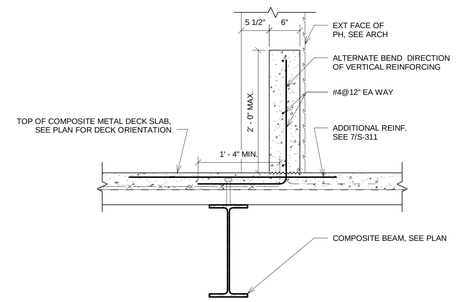

NOTE: CONCRETE SLAB MUST REACH 80% OF DESIGN STRENGTH PRIOR TO CONCRETE CURB PLACEMENT

2 TYP. CURB AT PENTHOUSE

S-314 REF. S-105a SCALE: 1" = 1'-0"

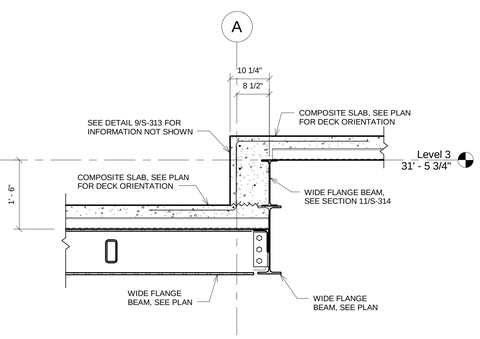

13 SECTION

S-314 REF. S-314 SCALE: 3/4" = 1'-0"

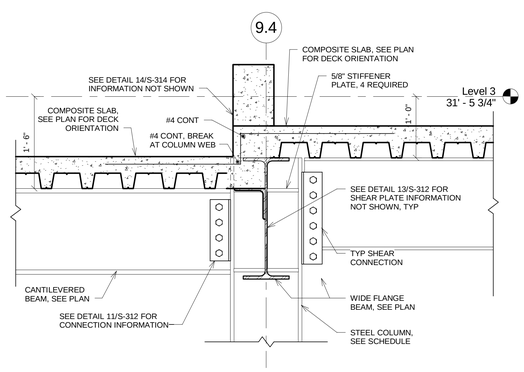

9 CANTILEVERED BEAM CONNECTION TO COLUMN

S-314 REF. S-103b SCALE: 1" = 1'-0"

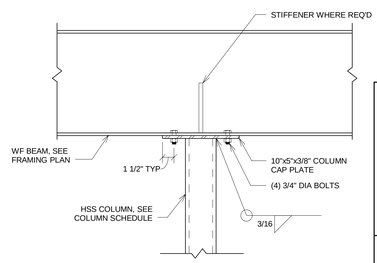

5 CONT. BEAM OVER HSS

S-314 REF. S-103a SCALE: 1 1/2" = 1'-0"

100% SUBMITTAL

AECOM

AECOM TECHNICAL SERVICES, INC.
3101 WILSON BOULEVARD
SUITE 900
ARLINGTON, VA 22201

T: 703-682-4900 F: 703.682.4901
www.aecom.com

SEAL AREA

STATE OF MARYLAND THOMAS J. GILLASPIE No. 36224 PROFESSIONAL ENGINEER

KEY PLAN

REV	DATE	DESCRIPTION	S&R BR.	CUSTOMER	PM	SECT. HEAD

	INITIALS	DATE
DRAWN BY	MJI	
CHECKED BY	KTB	
A-E MANAGER	EW	
ENVIRONMENTAL BRANCH	JH	
SAFETY BRANCH	CS	
CM	MMD	
PM	RWP	
CUSTOMER	JWB	
ENG. BRANCH	DGL	

Steel Connection Details

S-314

FLIGHT PROJECTS BUILDING

NATIONAL AERONAUTICS AND SPACE ADMINISTRATION

GODDARD SPACE FLIGHT CENTER GREENBELT, MARYLAND
FACILITIES MANAGEMENT DIVISION

DATE ISSUED	CoF CODE OR WR#	AECOM PROJECT NO.	SCALE
10/12/2012	12GXAZ	60187636	As indicated

FILE DATE: 10/10/2012 3:26:15 PM

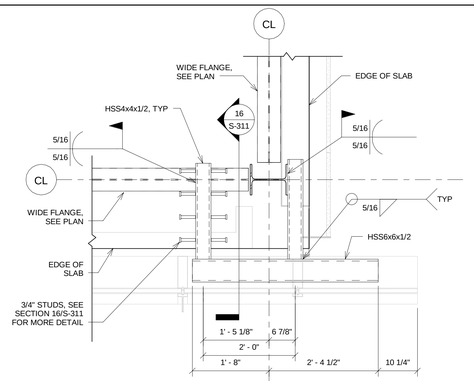

12 FIN SUPPORT PARTIAL PLAN

S-315 REF. S-102a SCALE: 3/4" = 1'-0"

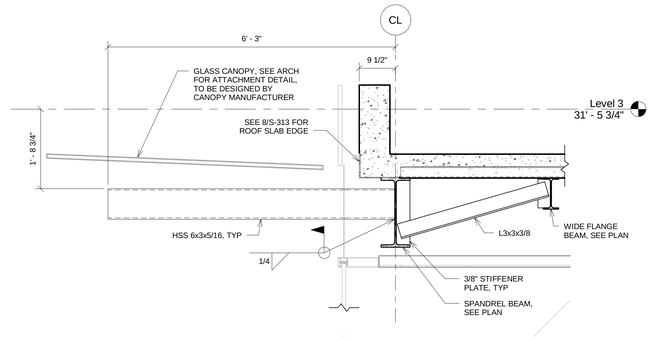

8 SECTION

S-315 REF. S-103b SCALE: 3/4" = 1'-0"

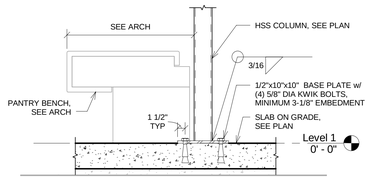

4 SECTION AT PANTRY BENCH AT SOG

S-315 REF. S-101a SCALE: 1" = 1'-0"

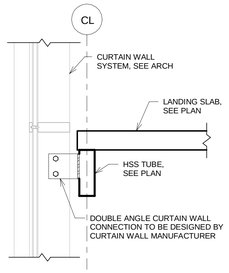

11 TYP CURTAIN WALL CONN @ TOWER STAIR LANDING

S-315 REF. S-501 SCALE: 3/4" = 1'-0"

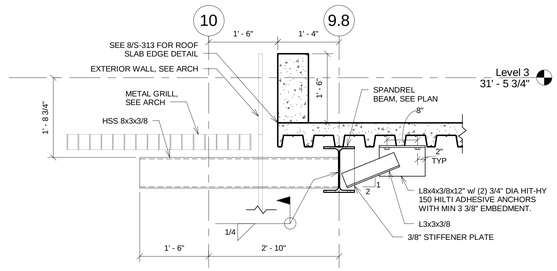

7 SECTION

S-315 REF. S-103b SCALE: 3/4" = 1'-0"

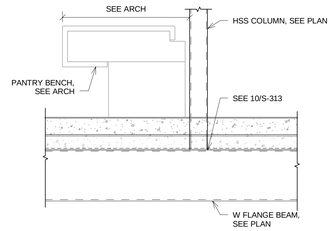

3 SECTION AT PANTRY BENCH

S-315 REF. S-102a SCALE: 1" = 1'-0"

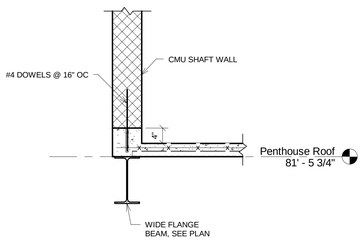

14 SECTION

S-315 REF. S-105b SCALE: 3/4" = 1'-0"

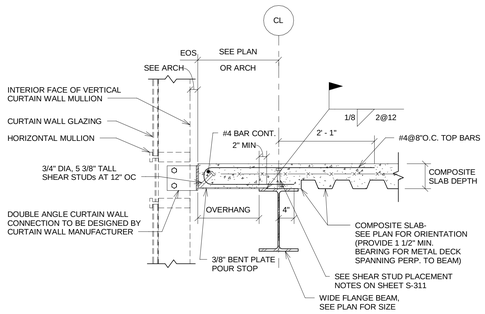

10 TYP. CANTILEVERED SLAB DETAIL @ CURTAIN WALL

S-315 REF. S-102a SCALE: 3/4" = 1'-0"

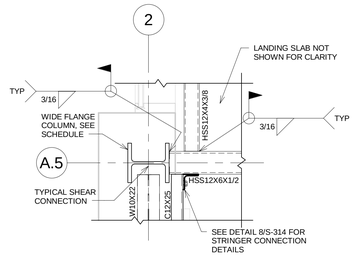

6 TYP PARTIAL PLAN AT TOWER STAIR LANDING

S-315 REF. S-501 SCALE: 3/4" = 1'-0"

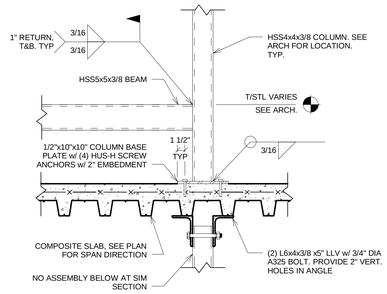

NOTE: AT SIM SECTION, ATTACH BASEPLATE TO SLAB ON GRADE.

2 ENTRYWAY BENCH SUPPORT

S-315 REF. S-101a SCALE: 1" = 1'-0"

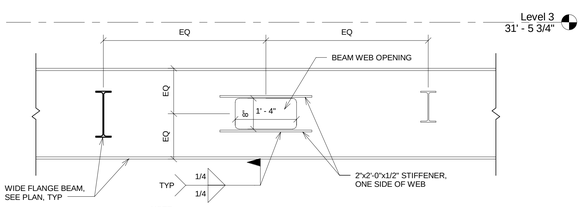

NOTE:

1. CONCRETE NOT SHOWN FOR CLARITY

13 BEAM WEB OPENING DETAIL

S-315 REF. S-103b SCALE: 3/4" = 1'-0"

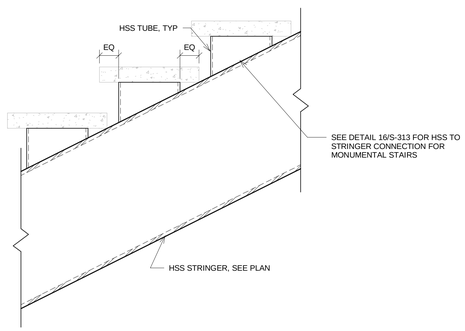

9 TYP TREAD CONNECTION

S-315 REF. S-313 SCALE: 1 1/2" = 1'-0"

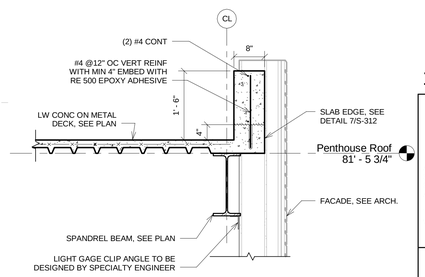

NOTE: CONCRETE SLAB MUST REACH 80% STRENGTH PRIOR TO CONCRETE CURB PLACEMENT

5 PENTHOUSE ROOF CURB

S-315 REF. S-106a SCALE: 3/4" = 1'-0"

100% SUBMITTAL

AECOM

AECOM TECHNICAL SERVICES, INC.
3101 WILSON BOULEVARD
SUITE 900
ARLINGTON, VA 22201

T: 703-682-4900 F: 703.682.4901
www.aecom.com

SEAL AREA

STATE OF MARYLAND — THOMAS J. GILLIGAN — No. 34024A — PROFESSIONAL ENGINEER

KEY PLAN

REV	DATE	DESCRIPTION	S&R BR.	CUSTOMER	PM	SECT. HEAD

	INITIALS	DATE
DRAWN BY	MJI	
CHECKED BY	KTB	
A-E MANAGER	EW	
ENVIRONMENTAL BRANCH	JH	
SAFETY BRANCH	CS	
CM	MMD	
PM	RWP	
CUSTOMER	JWB	
ENG. BRANCH	DGL	

Steel Connection Details

S-315

FLIGHT PROJECTS BUILDING

NATIONAL AERONAUTICS AND SPACE ADMINISTRATION

GODDARD SPACE FLIGHT CENTER GREENBELT, MARYLAND
FACILITIES MANAGEMENT DIVISION

DATE ISSUED	CoF CODE OR WR#	AECOM PROJECT NO.	SCALE
10/12/2012	12GXAZ	60187636	As indicated

FILE DATE: 10/10/2012 3:26:20 PM

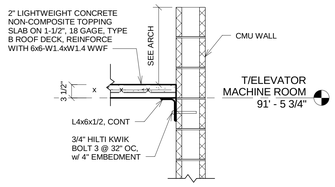

16 ROOF CURB @ CMU WALL

S-321 REF. S-106b SCALE: 3/4" = 1'-0"

NON LOAD BEARING MASONRY REINFORCEMENT SCHEDULE			
12" CMU	EXTERIOR	Hw ≤ 10'-0"	#6@48" CTR'D.
		Hw > 10'-0" ≤ 14'-0"	#6@48" CTR'D.
	INTERIOR	Hw ≤ 16'-0"	#6@48" CTR'D.
8" CMU	EXTERIOR	Hw ≤ 10'-0"	#5@48" CTR'D.
		Hw > 10'-0" ≤ 14'-0"	#5@32" CTR'D.
	INTERIOR	Hw ≤ 16'-0"	#5@48" CTR'D.

* THE REINFORCING PROVIDED IN THE CHART ABOVE IS ONLY TO BE USED WHEN REINFORCING IS NOT PROVIDED ON THE PLAN OR IN THE DETAILS.

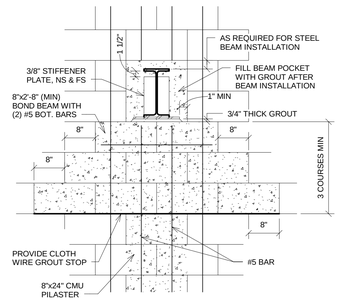

TYP ELEVATION

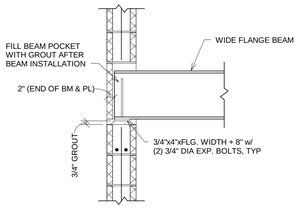

TYP SECTION

8 BEAM POCKET DETAIL

S-321 REF. S-105a SCALE: 3/4" = 1'-0"

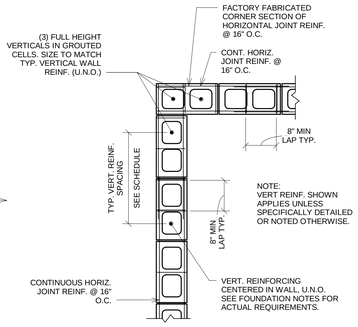

TYP VERTICAL REINFORCING & JOINT REINFORCING

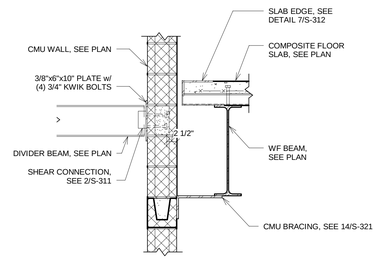

NOTE: KWIK BOLTS MUST BE INSTALLED IN FULLY GROUTED CELL

15 DIVIDER BEAM SHEAR CONNECTION

S-321 REF. S-102b SCALE: 3/4" = 1'-0"

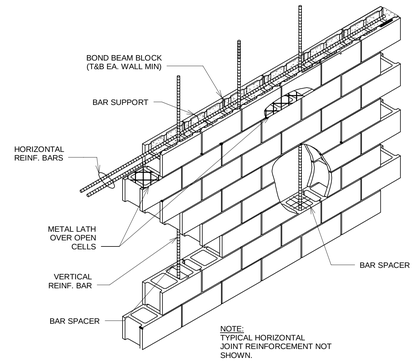

NOTES:
1. GROUT CMU CELLS AT VERTICAL REINFORCING ONLY.
2. VERTICAL AND HORIZONTAL REINFORCING LAP SPLICES ARE 48 BAR DIAM. U.N.O.
3. ANCHOR ALL VERTICAL REINF TO FOUNDATION USING MATCHING DWLS.
4. PROVIDE ADDITIONAL 2-#5 VERTICAL REINF. EA. SIDE OPNG AND CONTROL JOINT.
5. PROVIDE CONT. 9 GA LADDER TYPE HORIZ. JOINT REINF. @ 16" O.C.
6. REINFORCE CMU CORES AT ALL CORNERS W/ 2-#6
7. USE BOND BEAM W/ 2-#5 MIN. AT TOP AND BOTT. OF WALL.
8. EXTERIOR LOCATION APPLIES WHERE CMU WALL OR FINISH ON CMU WALL IS DIRECTLY EXPOSED TO WIND. INCLUDING INTERIOR WALLS LOCATED IN WIND PATHS. INTERIOR LOCATION APPLIES WHERE CMU WALL IS NOT DIRECTLY EXPOSED TO WIND.
9. REINFORCEMENT SHOWN IN SCHEDULE APPLIES, UNLESS GREATER REINFORCEMENT CALLED OUT IN PLAN OR DETAILS.
10. THIS DETAIL REQUIRES THE USE OF TYPE S MORTAR.

10 RUNNING BOND MASONRY/REINF. SCHEDULE

S-321 REF. SCALE: 3/4" = 1'-0"

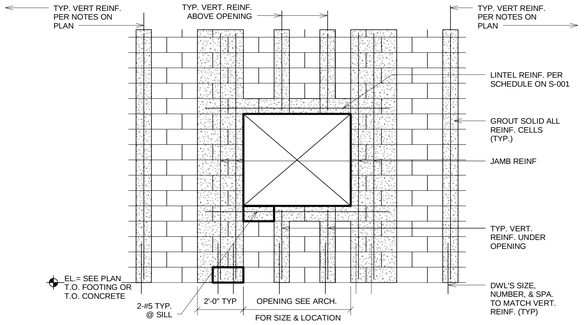

TYPICAL CMU WALL ELEVATION

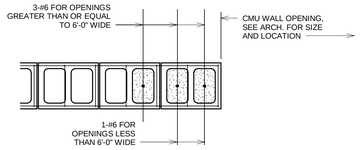

TYP JAMB DETAIL

NOTES:
1. TYP. BOND BEAM REINFORCING NOT SHOWN FOR CLARITY.
2. DETAIL SHOWN IS FOR WINDOWS. DOOR OPNGS ARE SIMILAR.

7 RUNNING BOND C.M.U. OPENING

S-321 REF. SCALE: 3/4" = 1'-0"

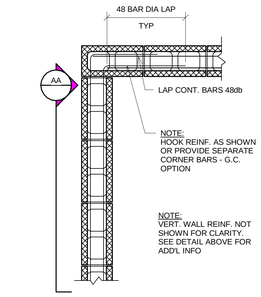

AT BOND BEAMS

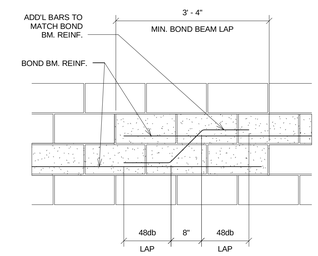

NOTE:
IF BOND BM. CHANGES ELEV. AT BLDG. CORNER, EXTEND EA. BOND BM. 3'-4" AROUND CORNER AND OMIT ADD'L BARS.

ELEVATION 'AA' IF BOND BEAM STEP

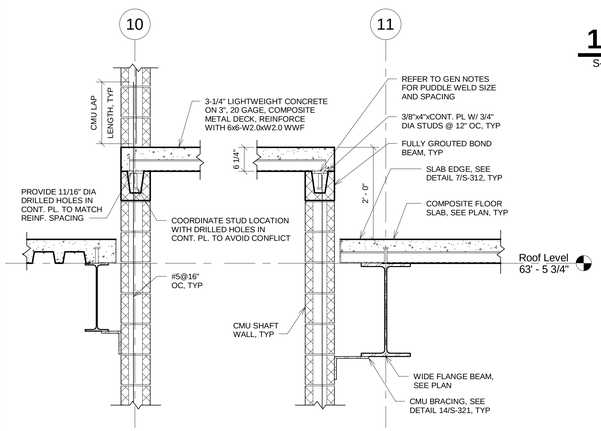

18 SECTION

S-321 REF. S-105b SCALE: 3/4" = 1'-0"

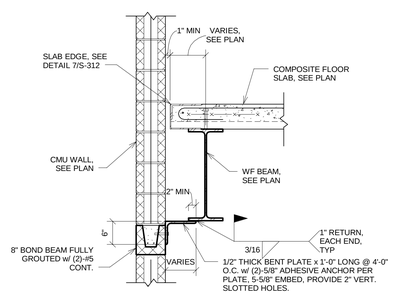

14 CMU WALL RESTRAINT AT FLOOR

S-321 REF. S-102a SCALE: 3/4" = 1'-0"

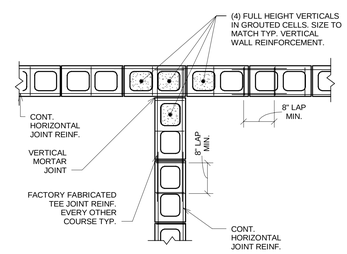

TYP. VERT. REINF. & JOINT REINF.

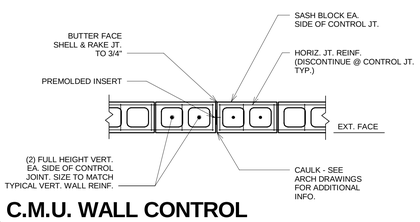

6 C.M.U. WALL CONTROL JOINT DETAIL

S-321 REF. SCALE: 3/4" = 1'-0"

2 C.M.U. WALL CORNER DETAIL

S-321 REF. SCALE: 3/4" = 1'-0"

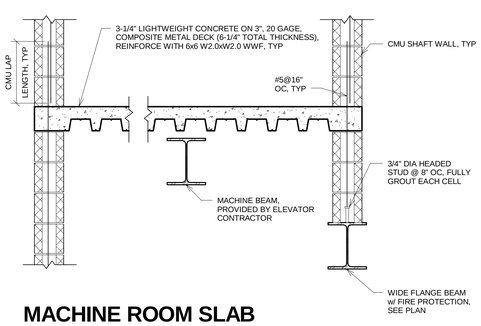

17 MACHINE ROOM SLAB SUPPORT

S-321 REF. S-105b SCALE: 3/4" = 1'-0"

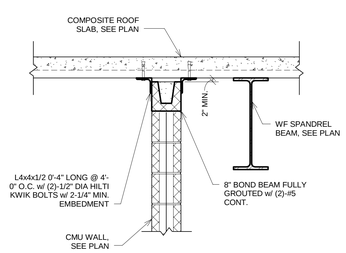

13 CMU WALL RESTRAINT AT ROOF

S-321 REF. SCALE: 3/4" = 1'-0"

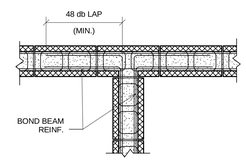

NOTE:
VERT. WALL REINF. NOT SHOWN FOR CLARITY. SEE DETAIL ABOVE FOR ADD'L INFO.

AT BOND BEAMS

NOTE:
BOND BEAM REINFORCING AT FRAMED FLOORS AND ROOF LEVEL SHALL BE CONTINUOUS THROUGH THE CONTROL JOINT. INTERMEDIATE BOND BEAM REINFORCING, BOND BEAM REINFORCING AT TOP PARAPETS AND BOND BEAM REINFORCING AT SLAB ON GRADE ELEVATION SHALL BE DISCONTINUED AT CONTROL JOINTS.

9 C.M.U. WALL INTERSECTION

S-321 REF. SCALE: 3/4" = 1'-0"

100% SUBMITTAL

AECOM
AECOM TECHNICAL SERVICES, INC.
3101 WILSON BOULEVARD
SUITE 900
ARLINGTON, VA 22201
T: 703-682-4900 F: 703.682.4901
www.aecom.com

SEAL AREA

STATE OF MARYLAND THOMAS J. GILLESPIE No. 34294 PROFESSIONAL ENGINEER

KEY PLAN

REV	DATE	DESCRIPTION	S&R BR.	CUSTOMER	PM	SECT. HEAD

	INITIALS	DATE
DRAWN BY	MJI	
CHECKED BY	KTB	
A-E MANAGER	EW	
ENVIRONMENTAL BRANCH	JH	
SAFETY BRANCH	CS	
CM	MMD	
PM	RWP	
CUSTOMER	JWB	
ENG. BRANCH	DGL	

Typical Masonry Details

S-321

FLIGHT PROJECTS BUILDING

NATIONAL AERONAUTICS AND SPACE ADMINISTRATION

GODDARD SPACE FLIGHT CENTER GREENBELT, MARYLAND
FACILITIES MANAGEMENT DIVISION

DATE ISSUED	CoF CODE OR WR#	AECOM PROJECT NO.	SCALE
10/12/2012	12GXAZ	60187636	3/4" = 1'-0"

FILE DATE: 10/10/2012 3:26:24 PM

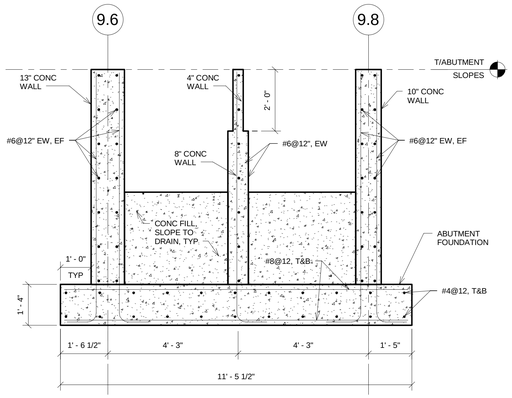

13 ABUTMENT DETAIL

S-401 REF. S-401 SCALE: 1/2" = 1'-0"

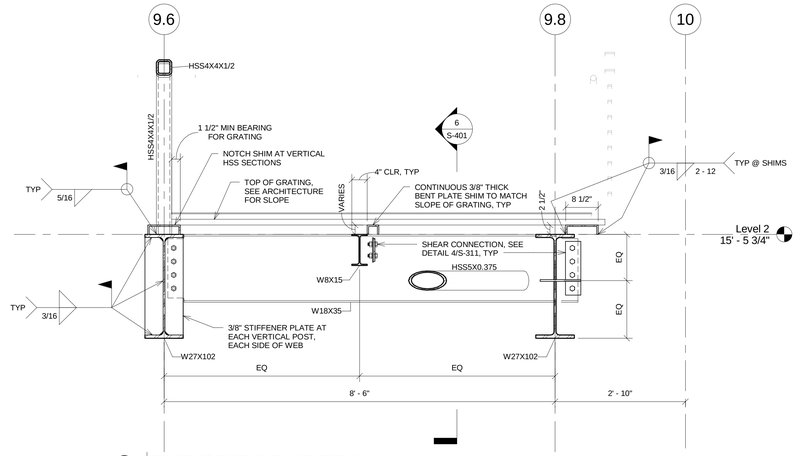

8 TYP BRIDGE SECTION

S-401 REF. S-401 SCALE: 3/4" = 1'-0"

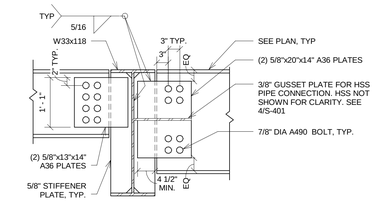

5 BRIDGE CONN AT BUILDING

S-401 REF. S-401 SCALE: 3/4" = 1'-0"

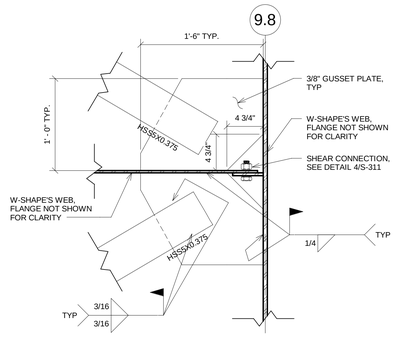

4 CHORD CONNECTION DETAIL

S-401 REF. S-401 SCALE: 1 1/2" = 1'-0"

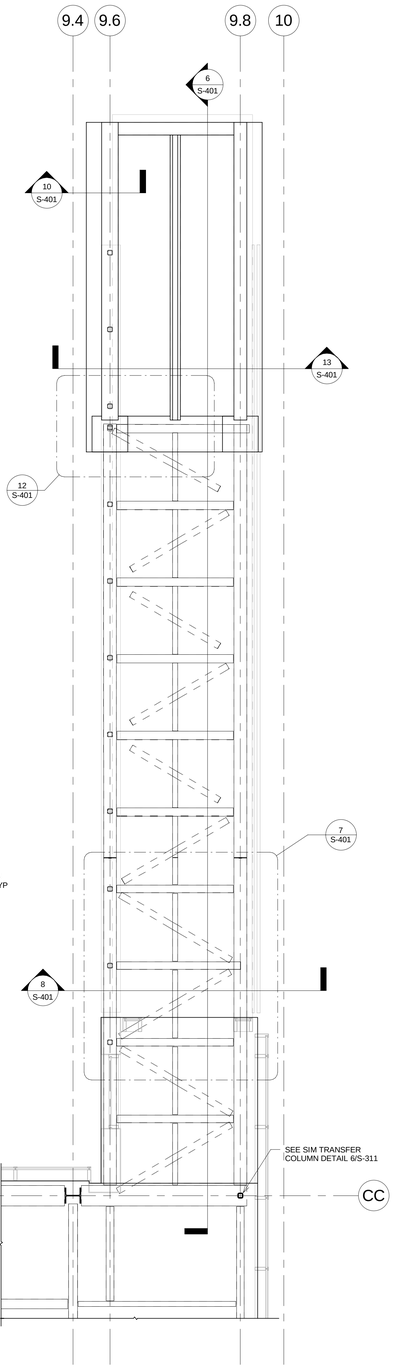

1 PEDESTRIAN BRIDGE

S-401 REF. S-201 SCALE: 1/4" = 1'-0"

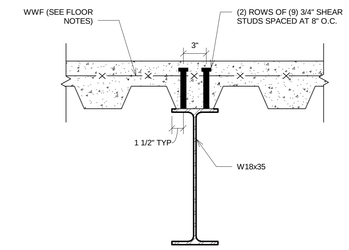

PEDESTRIAN BRIDGE DRAG STRUT

S-401 REF. S-102a SCALE: 1 1/2" = 1'-0"

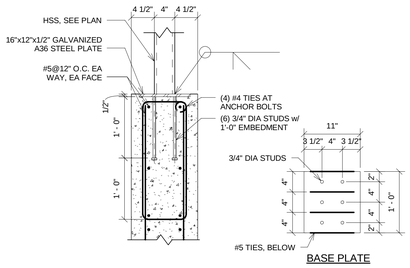

10 BASE PLATE DETAIL

S-401 REF. S-401 SCALE: 1" = 1'-0"

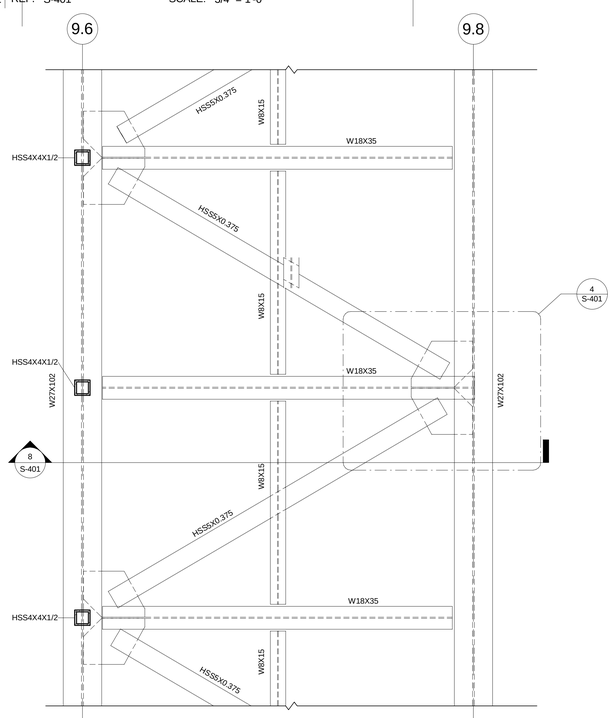

7 TYP BRIDGE FRAMING

S-401 REF. S-401 SCALE: 3/4" = 1'-0"

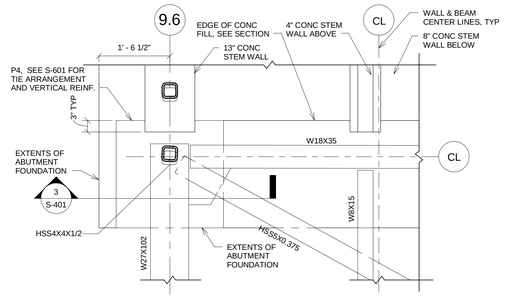

12 BRIDGE CONN AT ABUTMENT

S-401 REF. S-401 SCALE: 3/4" = 1'-0"

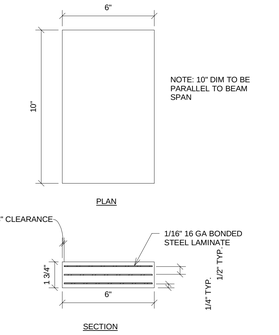

9 ELASTOMERIC BEARING PAD

S-401 REF. SCALE: 3" = 1'-0"

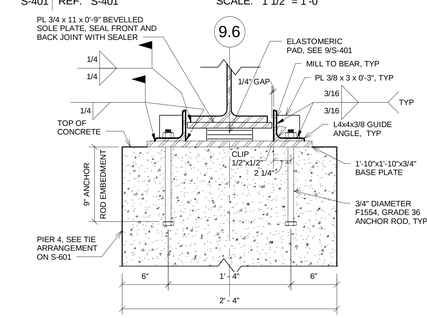

3 EXPANSION CONNECTION - SECTION

S-401 REF. S-401 SCALE: 1 1/2" = 1'-0"

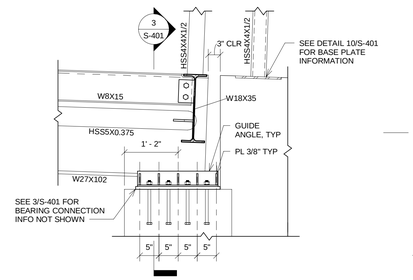

2 EXPANSION CONNECTION - ELEVATION

S-401 REF. S-401 SCALE: 3/4" = 1'-0"

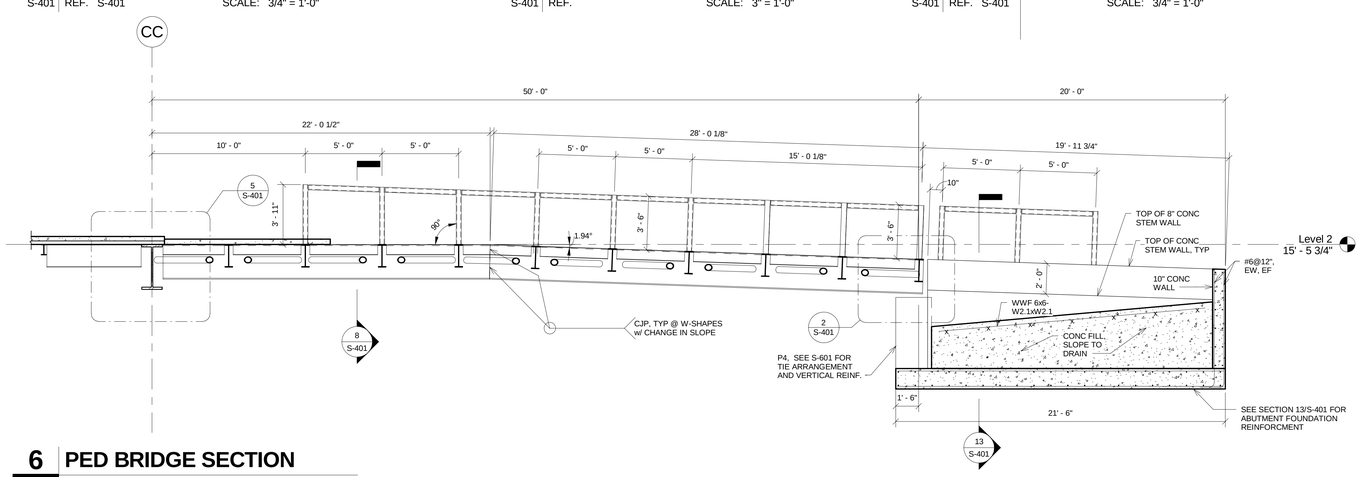

6 PED BRIDGE SECTION

S-401 REF. S-401 SCALE: 1/4" = 1'-0"

100% SUBMITTAL

AECOM

AECOM TECHNICAL SERVICES, INC.
3101 WILSON BOULEVARD
SUITE 900
ARLINGTON, VA 22201

T: 703-682-4900 F: 703.682.4901
www.aecom.com

SEAL AREA

STATE OF MARYLAND — THOMAS J. GILLASPIE — No. 34024A — PROFESSIONAL ENGINEER

KEY PLAN

REV	DATE	DESCRIPTION	S&R BR.	CUSTOMER	PM	SECT. HEAD

	INITIALS	DATE
DRAWN BY	MJI	
CHECKED BY	KTB	
A-E MANAGER	EW	
ENVIRONMENTAL BRANCH	JH	
SAFETY BRANCH	CS	
CM	MMD	
PM	RWP	
CUSTOMER	JWB	
ENG. BRANCH	DGL	

Pedestrian Bridge Plans & Details

S-401

FLIGHT PROJECTS BUILDING

NATIONAL AERONAUTICS AND SPACE ADMINISTRATION

GODDARD SPACE FLIGHT CENTER GREENBELT, MARYLAND
FACILITIES MANAGEMENT DIVISION

DATE ISSUED	CoF CODE OR WR#	AECOM PROJECT NO.	SCALE
10/12/2012	12GXAZ	60187636	As indicated

FILE DATE: 10/10/2012 3:26:28 PM

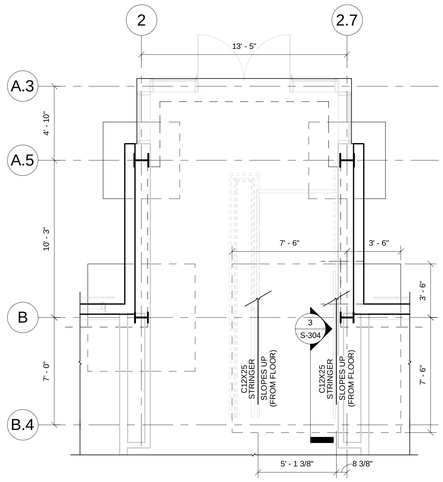

1 STAIR #1 - LEVEL 1

S-501 REF. S-101a SCALE: 1/4" = 1'-0"

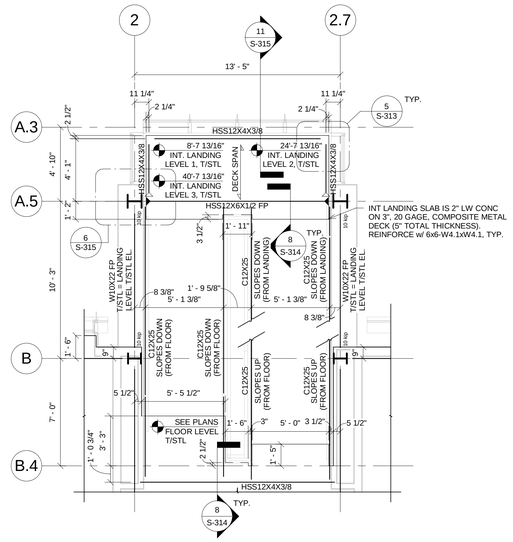

2 STAIR #1 - LEVELS 2, 3 & 4

S-501 REF. S-102a SCALE: 1/4" = 1'-0"

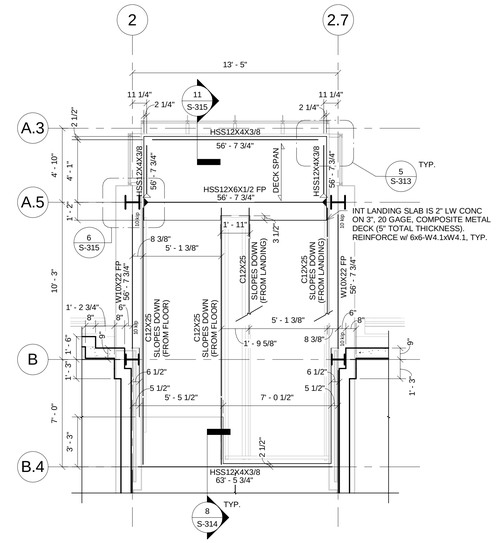

3 STAIR #1 - PENTHOUSE

S-501 REF. S-105a SCALE: 1/4" = 1'-0"

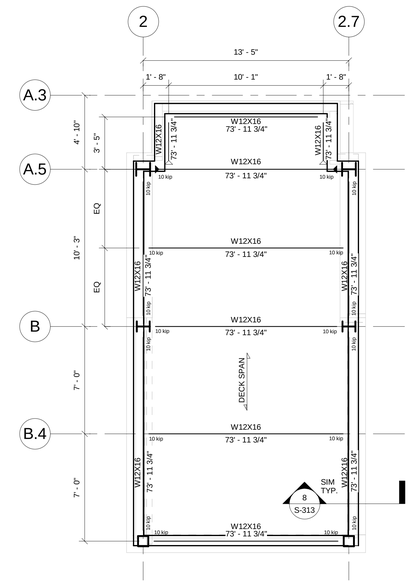

4 STAIR #1 - ROOF

S-501 REF. S-106a SCALE: 1/4" = 1'-0"

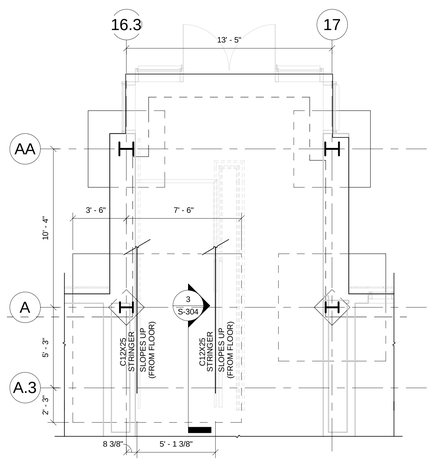

5 STAIR #2 - LEVEL 1

S-501 REF. S-101a SCALE: 1/4" = 1'-0"

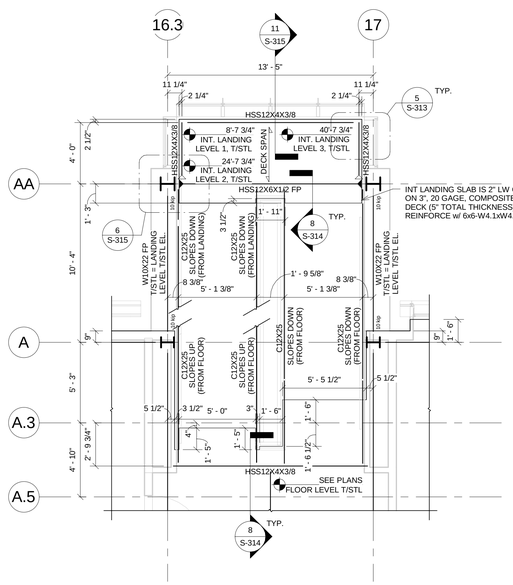

6 STAIR #2 - LEVELS 2, 3 & 4

S-501 REF. S-102a SCALE: 1/4" = 1'-0"

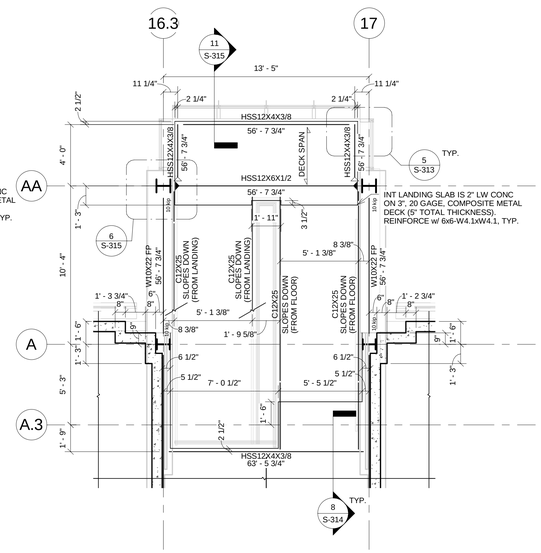

7 STAIR #2 - PENTHOUSE

S-501 REF. S-105a SCALE: 1/4" = 1'-0"

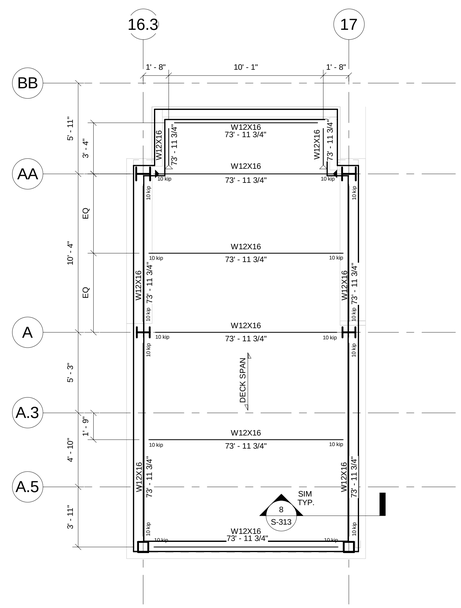

8 STAIR #2 - ROOF

S-501 REF. S-106a SCALE: 1/4" = 1'-0"

SHEET NOTES

1. DECK AT LANDING IS 2" LIGHTWEIGHT CONCRETE ON 3", 20 GAGE, COMPOSITE METAL DECK (5" TOTAL THICKNESS). REINFORCE WITH 6x6-W1.4XW1.4 WWF, TYP
2. DECK AT ROOF IS 2" LIGHTWEIGHT CONCRETE NON-COMPOSITE TOPPING SLAB ON 1-1/2", 18 GAGE, TYPE B ROOF DECK (3-1/2" TOTAL THICKNESS). 3 SPANS MINIMUM. REINFORCE WITH 6x6-W1.4XW1.4 WWF. TYP.
3. ALL SHEAR STUDS ARE TO BE 5-3/8" TALL UNLESS NOTED OTHERWISE.
4. PROVIDE A MINIMUM OF (1) STUD PER FOOT FOR ALL SPANS WHERE STUDS ARE NOT INDICATED.
5. T/STL DENOTED AS FOLLOWS: BEAM SIZE / T/STL ELEVATION

100% SUBMITTAL

AECOM

AECOM TECHNICAL SERVICES, INC.
3101 WILSON BOULEVARD
SUITE 900
ARLINGTON, VA 22201

T: 703-682-4900 F: 703.682.4901
www.aecom.com

SEAL AREA

STATE OF MARYLAND — THOMAS J. GIULIANO — NO. 34028A — PROFESSIONAL ENGINEER

KEY PLAN

REV	DATE	DESCRIPTION	S&R BR.	CUSTOMER	PM	SECT. HEAD

	INITIALS	DATE
DRAWN BY	MJI	
CHECKED BY	KTB	
A-E MANAGER	EW	
ENVIRONMENTAL BRANCH	JH	
SAFETY BRANCH	CS	
CM	MMD	
PM	RWP	
CUSTOMER	JWB	
ENG. BRANCH	DGL	

Stair #1 & #2 Partial Framing Plans

S-501

FLIGHT PROJECTS BUILDING

NATIONAL AERONAUTICS AND SPACE ADMINISTRATION

GODDARD SPACE FLIGHT CENTER GREENBELT, MARYLAND
FACILITIES MANAGEMENT DIVISION

DATE ISSUED	CoF CODE OR WR#	AECOM PROJECT NO.	SCALE
10/12/2012	12GXAZ	60187636	1/4" = 1'-0"

FILE DATE: 10/10/2012 3:26:32 PM

	A-10	A-11	A-12	A-13	A-14	A-15	A-16.3	A-17	A-18	A.3-8	A.3-9	A.3-9.8(-3' - 2")	A.3-11	A.3-12	A.3-13	A.5-2	A.5-2.7	A.5(-3' - 11")-16.3	A.5(-3' - 11")-17	B-1	B-2	B-2.7	B-4	B-5
Penthouse Roof																								
81' - 5 3/4" Roof Level												HSS8X8X3/8	HSS8X8X3/8	HSS8X8X3/8	HSS8X8X3/8			HSS8X8X3/8	HSS8X8X3/8					
63' - 5 3/4" Level 4	W10X33	W18X158	W18X158	W18X158	W18X158	W18X158	W10X45 FP	W10X45 FP	W10X33	W10X33	W12X65					W10X88	W10X88			W10X33	W10X45 FP	W10X45 FP	W18X158	W18X158
47' - 5 3/4" Level 3																								
31' - 5 3/4" Level 2	W10X39	W18x211	W18x211	W18x211	W18x211	W18x211	W10X45 FP	W10X45 FP	W10X39	W10X39	W12X106					W10X88	W10X88			W10X39	W10X45 FP	W10X45 FP	W18x211	W18x211
15' - 5 3/4" Level 1	BP-3	BP-7								BP-1														
0' - 0"	P1	P2	BP-7	BP-7	BP-7	BP-7	BP-1	BP-1	BP-1	P1	BP-6					BP-1	BP-1			BP-1	BP-1	BP-1	BP-7	BP-7
Column Locations																								

	B-6	B-7	B-8	B-9	B-11	B-13	B-15.2	B-17	B-18	B.4-7	B.4-8	B.4-9	B.4-10	C-1	C-2	C(6' - 4")-2	C(6' - 4")-2.7	C-3.8	C-6	C-7	C-8	C-9	D-10	D-11
Penthouse Roof																								
81' - 5 3/4" Roof Level										HSS8X8X3/8	HSS8X8X3/8	HSS8X8X3/8				HSS8X8X3/8	HSS8X8X3/8			HSS8X8X3/8				
63' - 5 3/4" Level 4	W18X158	W18X158	W18X158	W12X65	W10X54 FP	W12X72 FP	W12X120 FP	W12X53 FP	W10X39				W10X49	W10X39	W12X53 FP			W12X120 FP	W12X65 FP		W12X120 FP	W12X120	W10X39	W12X72 FP
47' - 5 3/4" Level 3																								
31' - 5 3/4" Level 2	W18x211	W18x211	W18x211	W12X106	W10X68 FP	W12X120 FP	W12X170 FP	W12X87 FP	W10X60				W10X60	W10X60	W12X87 FP			W12X170 FP	W12X106 FP		W12X120 FP	W12X120	W10X49	W12X96 FP
15' - 5 3/4" Level 1	BP-7	BP-7	BP-7	BP-6	BP-3	BP-4	BP-5	BP-2	BP-1				BP-3	BP-1	BP-2			BP-5	BP-4		BP-6	BP-6	BP-1	BP-6
0' - 0"			P2		P1								P1											
Column Locations																								

COLUMN SCHEDULE

REF. SCALE: 1/8" = 1'-0"

SHEET NOTES:

1. PROVIDE FIREPROOFING FOR STRUCTURAL MEMBERS INDICATED WITH "FP" DESIGNATION. SEE FIRE PROTECTION NOTE 25 ON G-002 FOR ADDITIONAL INFORMATION.

SYMBOL LEGEND

- TYPICAL BOLTED OR WELDED COLUMN SPLICE
- MOMENT CONNECTION COLUMN SPLICE

Base Plate Schedule

Base Plate Mark	Length	Width	Thickness	Anchor Bolt Diameter	Anchor Bolt Embedment	Anchor Bolt Layout	Grout Thickness	Comments
BP-1	1' - 5"	1' - 2"	1"	3/4"	6"	4-Bolt Layout	1 1/2"	
BP-2	1' - 7"	1' - 4"	1 1/4"	3/4"	6"	4-Bolt Layout	1 1/2"	
BP-3	1' - 5"	1' - 2"	1 1/2"	3/4"	6"	4-Bolt Layout	1 1/2"	
BP-4	1' - 8"	1' - 6"	2"	3/4"	6"	4-Bolt Layout	1 1/2"	
BP-5	2' - 8"	2' - 8"	2"	2"	2' - 1"	8-Bolt Layout	2"	ASTM F1554, Gr. 55
BP-6	1' - 7"	1' - 4"	1 1/2"	3/4"	6"	4-Bolt Layout	1 1/2"	
BP-7	2' - 6"	1' - 4"	1"	1"	9"	8-Bolt Layout	1 1/2"	

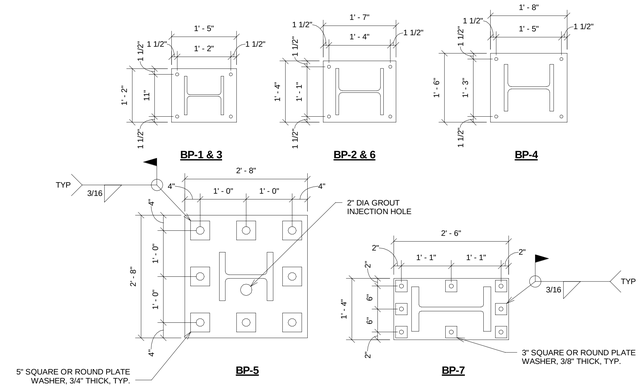

1 PLAN VIEW: BASE PLATES

S-601 REF. SCALE: 3/4" = 1'-0"

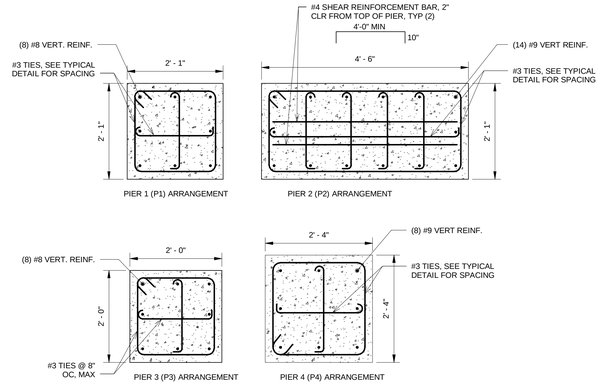

PIER TIE ARRANGEMENTS

REF. SCALE: 3/4" = 1'-0"

100% SUBMITTAL

AECOM

AECOM TECHNICAL SERVICES, INC.
3101 WILSON BOULEVARD
SUITE 900
ARLINGTON, VA 22201

T: 703-682-4900 F: 703.682.4901
www.aecom.com

SEAL AREA

STATE OF MARYLAND THOMAS J. GILLASPIE No. 34028A PROFESSIONAL ENGINEER

KEY PLAN

REV	DATE	DESCRIPTION	S&R BR.	CUSTOMER	PM	SECT. HEAD

	INITIALS	DATE
DRAWN BY	MJI	
CHECKED BY	KTB	
A-E MANAGER	EW	
ENVIRONMENTAL BRANCH	JH	
SAFETY BRANCH	CS	
CM	MMD	
PM	RWP	
CUSTOMER	JWB	
ENG. BRANCH	DGL	

Steel Column Schedule

S-601

FLIGHT PROJECTS BUILDING

NATIONAL AERONAUTICS AND SPACE ADMINISTRATION

GODDARD SPACE FLIGHT CENTER GREENBELT, MARYLAND
FACILITIES MANAGEMENT DIVISION

DATE ISSUED	CoF CODE OR WR#	AECOM PROJECT NO.	SCALE
10/12/2012	12GXAZ	60187636	As indicated

FILE DATE: 10/10/2012 3:26:34 PM

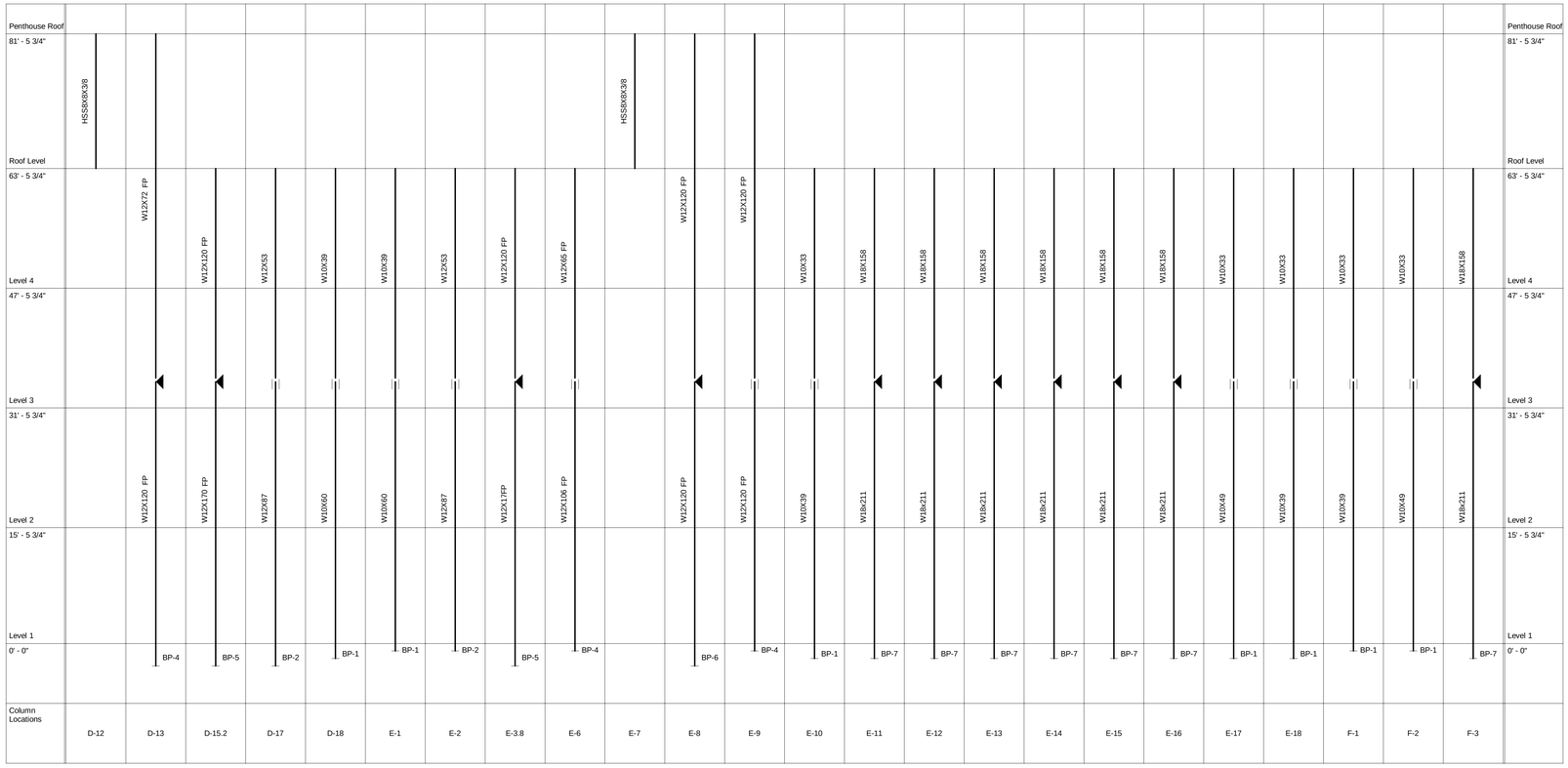

Base Plate Schedule								
Base Plate Mark	Length	Width	Thickness	Anchor Bolt Diameter	Anchor Bolt Embedment	Anchor Bolt Layout	Grout Thickness	Comments
BP-1	1' - 5"	1' - 2"	1"	3/4"	6"	4-Bolt Layout	1 1/2"	
BP-2	1' - 7"	1' - 4"	1 1/4"	3/4"	6"	4-Bolt Layout	1 1/2"	
BP-3	1' - 5"	1' - 2"	1 1/2"	3/4"	6"	4-Bolt Layout	1 1/2"	
BP-4	1' - 8"	1' - 6"	2"	3/4"	6"	4-Bolt Layout	1 1/2"	
BP-5	2' - 8"	2' - 8"	2"	2"	2' - 1"	8-Bolt Layout	2"	ASTM F1554, Gr. 55
BP-6	1' - 7"	1' - 4"	1 1/2"	3/4"	6"	4-Bolt Layout	1 1/2"	
BP-7	2' - 6"	1' - 4"	1"	1"	9"	8-Bolt Layout	1 1/2"	

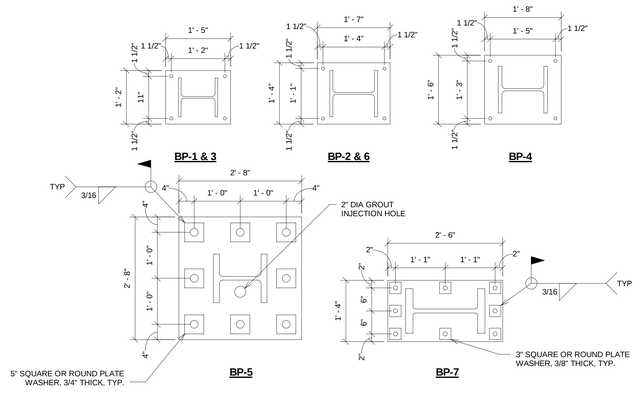

1 PLAN VIEW: BASE PLATES

S-602 REF. SCALE: 3/4" = 1'-0"

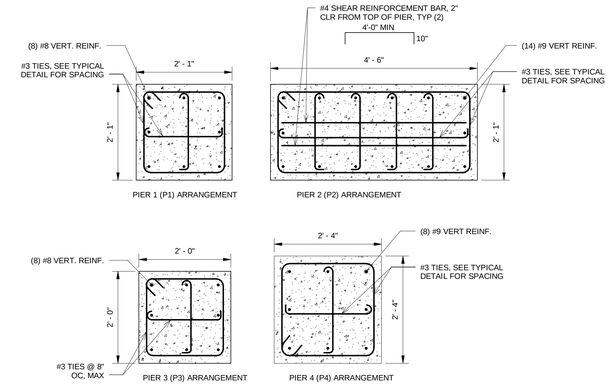

PIER TIE ARRANGEMENTS

REF. SCALE: 3/4" = 1'-0"

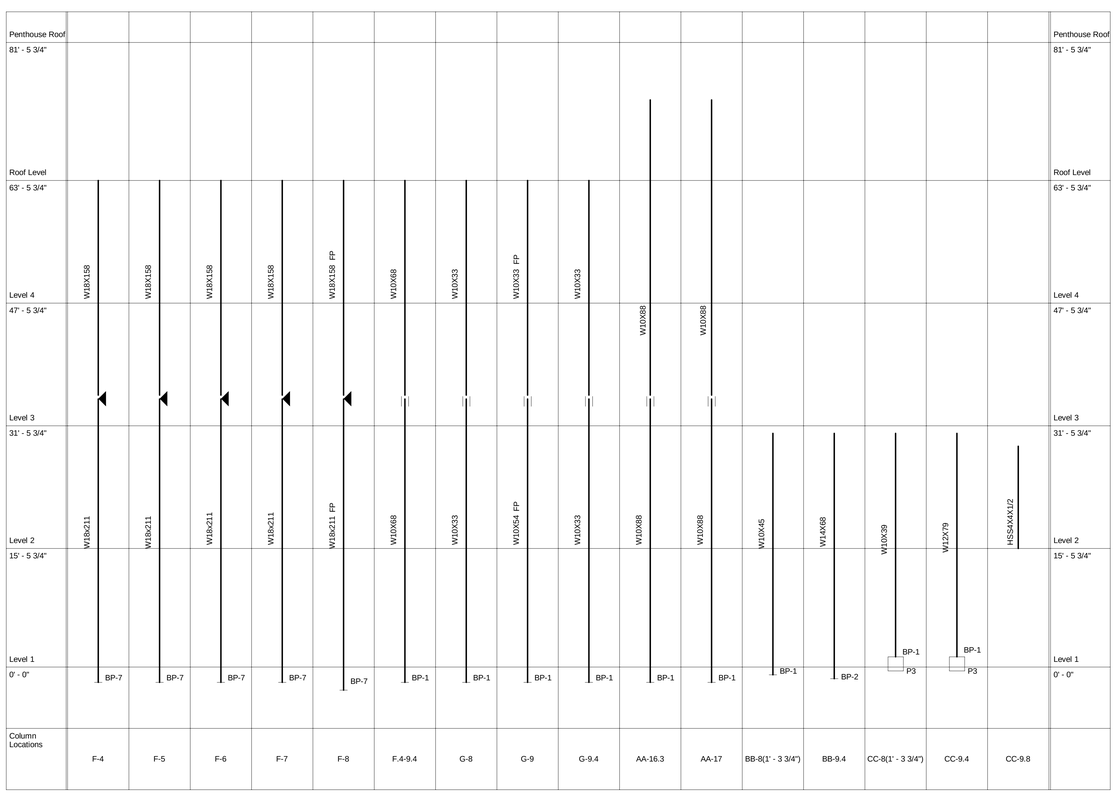

COLUMN SCHEDULE

REF. SCALE: 1/8" = 1'-0"

SHEET NOTES:

1. PROVIDE FIREPROOFING FOR STRUCTURAL MEMBERS INDICATED WITH "FP" DESIGNATION. SEE FIRE PROTECTION NOTE 25 ON G-002 FOR ADDITIONAL INFORMATION.

SYMBOL LEGEND

TYPICAL BOLTED OR WELDED COLUMN SPLICE

MOMENT CONNECTION COLUMN SPLICE

100% SUBMITTAL

AECOM

AECOM TECHNICAL SERVICES, INC.
3101 WILSON BOULEVARD
SUITE 900
ARLINGTON, VA 22201

T: 703-682-4900 F: 703.682.4901
www.aecom.com

SEAL AREA

STATE OF MARYLAND — THOMAS J. GILLIGAN — No. 34029A — PROFESSIONAL ENGINEER

KEY PLAN

REV	DATE	DESCRIPTION	S&R BR.	CUSTOMER	PM	SECT. HEAD

	INITIALS	DATE
DRAWN BY	MJI	
CHECKED BY	KTB	
A-E MANAGER	EW	
ENVIRONMENTAL BRANCH	JH	
SAFETY BRANCH	CS	
CM	MMD	
PM	RWP	
CUSTOMER	JWB	
ENG. BRANCH	DGL	

Steel Column Schedule

S-602

FLIGHT PROJECTS BUILDING

NATIONAL AERONAUTICS AND SPACE ADMINISTRATION

GODDARD SPACE FLIGHT CENTER GREENBELT, MARYLAND
FACILITIES MANAGEMENT DIVISION

DATE ISSUED	CoF CODE OR WR#	AECOM PROJECT NO.	SCALE
10/12/2012	12GXAZ	60187636	As indicated

FILE DATE: 10/10/2012 3:26:36 PM

PIPING LEGEND

Symbol	Description
(E)	EXISTING PIPING TO REMAIN
// // //	EXISTING PIPING TO BE REMOVED
HRS	HEAT RECOVERY SUPPLY
HRR	HEAT RECOVERY RETURN
HPS	HIGH PRESSURE STEAM 100 PSIG
HPC	HIGH PRESSURE CONDENSATE
MPS	MEDIUM PRESSURE STEAM 60 PSIG
MPC	MEDIUM PRESSURE CONDENSATE
LPS	LOW PRESSURE STEAM 15 PSIG
LPC	LOW PRESSURE CONDENSATE
SV	STEAM VENT
HWS	HEATING-HOT WATER SUPPLY
HWR	HEATING-HOT WATER RETURN
CHWS	CHILLED WATER SUPPLY
CHWR	CHILLED WATER RETURN
LHWR	LOWER TEMP HEATING WATER RETURN
LHWS	LOWER TEMP HEATING WATER SUPPLY
CWS	CONDENSER WATER SUPPLY
CWR	CONDENSER WATER RETURN
MU	MAKE-UP WATER
HG	REFRIGERANT HOT GAS
RS	REFRIGERANT SUCTION
RL	REFRIGERANT LIQUID
PC	CONDENSATE PUMP DISCHARGE
BFW	BOILER FEEDWATER
BBD	BOILER BLOW DOWN
FOS	FUEL-OIL SUPPLY
FOR	FUEL-OIL RETURN
FOV	FUEL-OIL VENT
SAN	SANITARY DRAIN
V	VENT
D	DRAINLINE
CW	COLD WATER
A	COMPRESSED AIR
GS	GLYCOL SUPPLY
GR	GLYCOL RETURN
HCS	HOT CHILLED WATER SUPPLY
HCR	HOT CHILLED WATERRETURN
C	COLD CONDENSER WATER
CR	HOT CONDENSER WATER
CP	CONDENSATE PUMP DISCHARGE
HTCHWS	HIGH TEMPERATURE CHILLED WATER SUPPLY
HTCHWR	HIGH TEMPERATURE CHILLED WATER RETURN

Symbol	Description
	AUTOMATIC FLOW CONTROL VALVE
	STEAM TRAP
DS	DRIP STATION
P.R.S.	PRESSURE REDUCING STATION
	PIPE ANCHOR
	PIPE GUIDE
	EXPANSION JOINT
	VENTURI
	GATE VALVE
	GLOBE VALVE
	HOSE VALVE WITH CAP
	BUTTERFLY VALVE
	CHECK VALVE
	BALANCING VALVE
	CALIBRATED BALANCING VALVE
	PLUG VALVE
S	SOLENOID VALVE
	SAFETY OR PRESSURE RELIEF, ANGLE VALVE
	SAFETY OR PRESSURE RELIEF, STRAIGHT THRU VALVE
	PRESSURE REDUCING VALVE (PRV)
	AUTOMATIC CONTROL VALVE, 2 WAY
	AUTOMATIC CONTROL VALVE, 3 WAY
	ELECTRICALLY OPERATED VALVE
	BLIND FLANGE
	LATERALY
	CAP
	ELBOW, 90°
	ELBOW, 90° TURNED UP
	ELBOW, 90° TURNED DOWN
	ELBOW, 45°
	TEE
	TEE, OUTLET TURNED UP
	TEE, OUTLET TURNED DOWN
	TRANSITION
	UNION
	FLEXIBLE PIPE CONNECTION

Symbol	Description
P	PRESSURE GAGE WITH SHUT OFF COCK AND SIPHON OR PULSATION DAMPENER
T	TEMPERATURE GAGE
V	VACUUM GAGE WITH SHUT OFF COCK AND SIPHON OR PULSATION DAMPENER
	THERMOMETER
	PRESSURE/TEMPERATURE TEST PORT
WFD	WATERFLOW DETECTOR
	OS&Y VALVE
	PLUG
FD	FLOOR DRAIN W/TRAP
CO	CLEAN OUT
WHA	WATER HAMMER ARRESTER
HB	HOSE BIBB
WH	WALL HYDRANT
	DOUBLE CHECK VALVE BACKFLOW PREVENTER
	REDUCED PRESSURE BACKFLOW PREVENTER
	Y-TYPE STRAINER
	Y-TYPE STRAINER WITH HOSE DRAIN VALVE
	FLUID FLOW DIRECTION
R	INCLINED RISE WITH RESPECT TO AIR FLOW
D	INCLINED DROP WITH RESPECT TO AIR FLOW
F	FLOW METER
	BALL VALVE

MISCELLANEOUS SYMBOLS

Symbol	Description
0000	ROOM NUMBER
ø	ROUND DUCT
	FLAT OVAL DUCT
ACB	ACTIVE CHILLED BEAM
ACB	LINEAR ACTIVE CHILLED BEAM
	EXISTING WORK TO BE REMOVED
	EXISTING WORK TO REMAIN
	NEW WORK
	SECURITY BARS
	UNIT HEATER
L	DOOR LOUVER
U	DOOR UNDERCUT
AHU-1	EQUIPMENT NUMBER / EQUIPMENT TYPE
F	FLOW SWITCH
	POINT OF CONNECTION BETWEEN NEW AND EXISTING WORK
	POINT BETWEEN EXISTING WORK TO REMAIN AND EXISTING WORK TO BE REMOVED

Symbol	Description
HD	HEAT DETECTOR
SD	SMOKE DETECTOR
SD	EQUIPMENT MOUNTED SMOKE DAMPER
BD	BACKDRAFT DAMPER
M	MOTORIZED DAMPER
	INTERVAL TIMER
H	HUMIDISTAT
T	THERMOSTAT
N	NIGHT THERMOSTAT
T T	TAMPER PROOF THERMOSTAT
T	DUCT MOUNTED THERMOSTAT
S	WALL SWITCH
	WATER SENSOR (LOCATED BELOW ACCESS FLOOR)
CO	CARBON MONOXIDE
CO2	CARBON DIOXIDE
NO2	NITROGEN DIOXIDE
D	DEW POINT SENSOR (CEILING PLENUM)
D	DEW POINT SENSOR (WALL MOUNTED)
C	CONDENSATION SENSOR

GENERAL NOTES

1. SEE M-001 FOR ABBREVIATIONS. CHARACTER IDENTIFIERS IN LINES ON PIPING LEGEND ARE ALSO USED FOR ABBREVIATIONS.
2. MECHANICAL LAYOUTS ARE SCHEMATIC. PROVIDE ANY ADDITIONAL DROPS, RISES, OR OFFSETS REQUIRED FOR A COMPLETE INSTALLATION. COORDINATE EXACT ROUTING OF WORK WITH ALL OTHER TRADES AND OBSTRUCTIONS. COORDINATE EXACT LOCATIONS OF CEILING MOUNTED WORK WITH LIGHTS, CEILING GRID, AND OTHER OBSTRUCTIONS.
3. UNLESS OTHERWISE INDICATED, ROUTE ALL DUCTWORK AND PIPING ABOVE CEILINGS. ROUTE ALL DUCTWORK AND PIPING AS HIGH AS POSSIBLE IN AREAS WITHOUT CEILINGS.
4. DUCT DIMENSIONS ARE INSIDE CLEAR DIMENSIONS. INCREASE SHEETMETAL DIMENSIONS ON LINED DUCTWORK TO MAINTAIN THE INSIDE CLEAR DIMENSIONS INDICATED.
5. UNLESS OTHERWISE INDICATED, PROVIDE DUCT RUNOUTS TO TERMINAL UNITS SAME SIZE AS TERMINAL UNIT INLET.
6. SIZE FLEXIBLE DUCT RUNOUTS TO TERMINAL AIR DEVICES AS FOLLOWS:

SIZE	CFM
6" Ø	0-125
8" Ø	126-225
10" Ø	226-340
12" Ø	341-450

7. INSTALL CALIBRATED BALANCING VALVES AND VENTURIS WITH A MINIMUM UNRESTRICTED STRAIGHT RUN OF 5 PIPE DIAMETERS UPSTREAM AND 3 PIPE DIAMETERS DOWNSTREAM.
8. SEE ARCHITECTURAL REFLECTED CEILING PLANS FOR EXACT LOCATIONS OF DIFFUSERS, LINEAR SLOT DIFFUSERS, REGISTERS, AND GRILLES.
9. ALL WORK INDICATED IS NEW UNLESS INDICATED AS EXISTING.
10. RELOCATE ALL EXISTING HANGERS, CONDUITS, WIRING, PIPING, AND DUCTWORK AS NECESSARY TO PROVIDE PIPING AND DUCTWORK AS INDICATED.
11. VERIFY EXACT SIZES AND LOCATIONS OF EXISTING WORK BEFORE PURCHASING OR FABRICATING NEW WORK FOR CONNECTION TO OR INSTALLATION IN EXISTING WORK.
12. SOME SYMBOLS INDICATED ON THIS LEGEND SHEET MAY NOT APPEAR ON THE DRAWINGS.
13. USE ALL AIR HANDLING LIGHT FIXTURES LOCATED IN AREAS WITH CEILING RETURN AIR PLENUMS TO RETURN AIR THROUGH THE HEAT EXTRACTION SLOTS. USE SIDE SLOTS ON 610x610 AND 610x1220 LIGHT FIXTURES TO RETURN AIR, IF THE RETURN AIR QUANTITY EXCEEDS 24 L/S PER LIGHT FIXTURE. USE SIDE SLOTS TO RETURN AIR ON 310x1220 LIGHT FIXTURES IF THE RETURN AIR QUANTITY EXCEEDS 19 L/S PER LIGHT FIXTURE.
14. DO NOT LOCATE MECHANICAL WORK IN ELECTRICAL OR COMMUNICATION ROOMS, EXCEPT FOR RUNOUTS SPECIFICALLY SERVING THE RESPECTIVE ROOM.
15. ALL THEROSTATS SHALL BE INSTALLED AT 60" AFF. WHERE INTERFERED WITH FURNITURES, THERMOSTATS SHALL BE INSTALLED APPROX. 2" ABOVE FURNITURE HEIGHT. WHERE THERMOSTATS INSTALLED AT LIGHT SWITCH, IT SHALL BE VERTICALLY LINE-UP AT CENTER WITH THE LIGHT SWITCH.
16. A PRESSURE INDEPENDENT CONSTANT AIRFLOW REGULATOR (BASIS OF DESIGN AMERICAN ALDES) SHALL BE PROVIDED AT EACH CHILLDED BEAM PRIMARY AIR CONNECTON TO MAINTAIN CONSTANT AIRFLOW AS DESIGNED.
17. ALL SMOKE DAMPERS (SMD) AND FIRE/SMOKE DAMPERS (FSD) SHALL BE FAILED CLOSED TYPE, OR SPRING RETURN TYPE.
18. CEILING DEVICES LOCATION, REFER TO RCP.
19 ALL SUPPLY MAIN DUCTS SHALL BE SIZED BASED ON THE VELOCITY OF 2000 FPM (MAX). SECONDARY DUCT (DOWN STREAM OF VAV TERMINAL UNIT) SHALL BE SIZED BASED ON A PRESSURE DROP OF 0.08" W.C. (MAX) PER 100FT LENGTH.

ABBREVIATIONS

ABV	ABOVE
A/C	AIR CONDITIONING UNIT
ACS	AIR CONDITIONING SYSTEM
ACB #	ACTIVE CHILLED BEAM / BEAM TYPE
AD	ACCESS DOOR
AFF	ABOVE FINISHED FLOOR
AFMS	AIR FLOW MEASURING STATION
AHU	AIR HANDLING UNIT
AP	ACCESS PANEL
APD	AIR PRESSURE DROP
APPR	APPROVED
APPROX	APPROXIMATE
ARCH.	ARCHITECTURAL
AS	AIR SEPARATOR
ASTM	AMERICAN SOCIETY FOR TESTING AND MATERIALS
AV	AIR VENT
AUX	AUXILIARY
BAS	BUILDING AUTOMATION SYSTEM
BBD	BOILER BLOW DOWN
BDD	BACKDRAFT DAMPER
BET.	BETWEEN
BFD	BOILER FEEDWATER DISCHARGE
BG	BOTTOM GRILLE
BLDG	BUILDING
BLR	BOILER
BLW	BELOW
BLW FL	BELOW FLOOR
BOT	BOTTOM
BOT REG	BOTTOM REGISTER
BSMT	BASEMENT
BTU	BRITISH THERMAL UNIT
BU	BUILT-UP
°C	DEGREES CELSIUS
CA	COMPRESSED AIR
CAP	CAPACITY
CBWS	CHILLED BEAM WATER SUPPLY
CBWR	CHILLED BEAM WATER RETURN
CC	COOLING COIL
CD	CEILING DIFFUSER
CENT.	CENTRIFUGAL
CFM	CUBIC FEET PER MINUTE
CG	CEILING GRILLE
CH	CHILLER
CHWR	CHILLED WATER RETURN
CHWS	CHILLED WATER SUPPLY
CHWP	CHILLED WATER PUMP
CI	CAST IRON
CLG	CEILING
CND	CONDUIT
CNDS	CONDENSATE
CNDSD	CONDENSATE DRAIN
CO	CLEAN OUT
COL	COLUMN
COMB.	COMBINATION
CONC	CONCRETE
COND	CONDENSER
CONN	CONNECT, CONNECTION
CONST	CONSTRUCTION
CONT	CONTINUOUS, CONTINUATION
CONTR	CONTRACT, CONTRACTOR
COORD	COORDINATE
COP	COPPER
CP	CONDENSATE PUMP
CR	CEILING REGISTER
CT	COOLING TOWER
CU	CONDENSING UNIT, CUBIC
CUH	CABINET UNIT HEATER
CV	CONSTANT VOLUME
CW	COLD WATER
CWR	CONDENSER WATER RETURN
CWS	CONDENSER WATER SUPPLY
D	DRAIN LINE
DB	DRY BULB TEMPERATURE
DEG	DEGREES
DEMO	DEMOLITION, DEMOLISH
DH	DUCT HEATER
DIA	DIAMETER
DIAG	DIAGRAM
DIFF	DIFFUSER
DIM.	DIMENSION
DISC.	DISCONNECT
DISCH	DISCHARGE
DMPR	DAMPER
DN	DOWN
DWG	DRAWING
E	EAST
EA	EXHAUST AIR, EACH
E.A.T.	ENTERING AIR TEMPERATURE
EER	ENERGY EFFICIENCY RATIO
EF	EXHAUST AIR FAN
EFF	EFFICIENCY
EJ	EXPANSION JOINT
ELEC	ELECTRICAL
ELEV.	ELEVATION
EMER	EMERGENCY
ENGR	ENGINEER
ENT	ENTERING
EQUIP	EQUIPMENT
ERU	ENERGY RECOVER UNIT
ESP	EXTERNAL STATIC PRESSURE
EST	ESTIMATED
ET	EXPANSION TANK
EUH	ELECTRIC UNIT HEATER
EXH	EXHAUST
EXP	EXPOSED
EXPN	EXPANSION
EXIST	EXISTING
EXT	EXTERIOR
EXTN	EXTENSION
E.W.T.	ENTERING WATER TEMPERATURE
°F	DEGREES FAHRENHEIT
F	FAN, FILTER
FCU	FAN COIL UNIT
FD	FLOOR DRAIN
FLR	FLOOR
FLA	FULL LOAD AMPS
FLEX	FLEXIBLE
FLG	FLANGE
FOF	FUEL-OIL FILL
FOR	FUEL-OIL RETURN
FOS	FUEL-OIL SUPPLY
FOV	FUEL-OIL VENT
FPM	FEET PER MINUTE
FRD	FIRE DAMPER
FT	FEET
FT WG	FEET OF WATER GAUGE
FTR	FIN-TUBE RADIATOR
FSD	FIRE SMOKE DAMPER
G	GAS
GA	GAUGE
GAL	GALLONS
GALV	GALVANIZE, GALVANIZED
GEN	GENERATOR
GND	GROUND
GOVT	GOVERNMENT
GPH	GALLONS PER HOUR
GPM	GALLONS PER MINUTE
GR	GRADE
GRL	GRILLE
GTV	GATE VALVE
H	HUMIDIFIER
HB	HOSE BIBB
HC	HEATING COIL
HD	HEAT DETECTOR
HGT	HEIGHT
HORIZ	HORIZONTAL
HP	HORSE POWER
HPC	HIGH PRESSURE CONDENSATE
HPS	HIGH PRESSURE STEAM
HPU	HEAT PUMP UNIT
HR	HOUR
HRR	HEAT RECOVERY RETURN
HRS	HEAT RECOVERY SUPPLY
HTR	HEATER
HTCHWS	HIGH TEMPERATURE CHILLED WATER SUPPLY
HTCHWR	HIGH TEMPERATURE CHILLED WATER RETURN
HVAC	HEATING, VENTILATING & AIR-CONDITIONING
HW	HOT WATER
HWC	HOT WATER CIRCULATING LINE
HWL	HIGH-WATER LINE
HWR	HOT WATER HEATING RETURN
HWS	HOT WATER HEATING SUPPLY
HWP	HOT WATER PUMP
HX	HEAT EXCHANGER
HYD	HYDRANT
HZ	HERTZ
IN	INCH
IN WG	INCHES OF WATER GAUGE
INSTL	INSTALL
INSUL	INSULATION, INSULATED, INSULATOR, INSULATING
INTMD	INTERMEDIATE
IP	IRON PIPE
ICU	INDUCTION UNIT
JC	JANITOR CLOSET
KG	KILOGRAM
KW	KILOWATT
KWH	KILOWATT HOUR

L	LITER
LAB	LABORATORY
LAT	LEAVING AIR TEMPERATURE
LAV	LAVATORY
LBS	POUNDS
LBS/HR	POUNDS PER HOUR
LCD	LINEAR CEILING DIFFUSER
LF	LINEAR FOOT, LINEAR FEET
LG	LENGTH, LONG
LIQ	LIQUID
LPC	LOW PRESSURE CONDENSATE
LPS	LOW PRESSURE STEAM
LRA	LOCKED ROTOR AMP
LVR	LOUVER
LWL	LOW-WATER LINE
LWT	LEAVING WATER TEMPERATURE
LHWS	LOW TEMPERATURE HEATING WATER SUPPLY
LHWR	LOW TEMPERATURE HEATING WATER RETURN
M	METER
MATL	MATERIAL
MAX	MAXIMUM
MBH	1000 BTU PER HOUR
MCA	MINIMUM CIRCUIT AMPACITY
MCC	MOTOR CONTROL CENTER
MD	MOTORIZED DAMPER
MECH	MECHANICAL
MER	MECHANICAL EQUIPMENT ROOM
MET.	METAL
MFR	MANUFACTURER
MH	MANHOLE, MOUNTING HEIGHT
MIN	MINIMUM
MISC	MISCELLANEOUS
MM	MILLIMETER
MOCP	MAXIMUM OVERCURRENT PROTECTION
MP	MEDIUM PRESSURE
MPH	MILES PER HOUR
MPC	MEDIUM PRESSURE CONDENSATE
MPS	MEDIUM PRESSURE STEAM
MT	MOUNT
MTD	MOUNTED
MTG	MOUNTING
MTR	MOTOR
MTZ	MOTORIZED
N	NORTH
N/A	NOT APPLICABLE
NC	NORMALLY CLOSED, NOISE CRITERIA
NIC	NOT IN CONTRACT
NO	NORMALLY OPEN, NUMBER
NOM	NOMINAL
NTS	NOT TO SCALE
OA	OUTSIDE AIR
OAI	OUTSIDE AIR INTAKE
OD	OUTSIDE DAMPER
OL	OVERLOAD
OPNG	OPENING
OSD	OPEN SIGHT DRAIN
OS&Y	OUTSIDE SCREW AND YOKE
OVHD	OVERHEAD
P	PUMP
PA	PIPE ANCHOR
PART.	PARTIAL
PC	PUMPED CONDENSATE
PCHWR	PRIMARY CHILLED WATER RETURN
PCHWS	PRIMARY CHILLED WATER SUPPLY
PCR	PERFORATED CEILING RETURN
PD	PRESSURE DROP
PDCV	PRESSURE DIFFERENTIAL CONTROL VALVE
PG	PIPE GUIDE
PH	PHASE, PENTHOUSE
PHC	PREHEAT COIL
PNL	PANEL
PPH	POUNDS PER HOUR
PRESS.	PRESSURE
PRI	PRIMARY
PROP	PROPELLER
P.R.S.	PRESSURE REDUCING STATION
PRI	PRIMARY
PRV	PRESSURE REDUCING VALVE, PRESSURE RELIEF VALVE, POWER ROOF VENTILATOR
PSI	POUNDS PER SQUARE INCH
PSIG	POUNDS PER SQUARE INCH GAUGE
PT	POINT
PVC	POLYVINYL CHLORIDE
PWR	POWER
R	RISER, RIGHT
RA	RETURN AIR
RAD	RADIUS
RD	ROOF DRAIN. REFRIGERANT DISCHARGE
RECIR	RECIRCULATING
RECT	RECTANGULAR
RED	REDUCER, REDUCING
REHT	REHEAT
REIN	REINFORCE, REINFORCEMENT, REINFORCED
REQD	REQUIRED
REV	REVISION
RF	RETURN AIR FAN, ROOF
RFGT	REGRIGERANT
RFH	ROOF HATCH
RL	REFRIGERANT LIOUID
RLA	RUNNING LOAD AMPS
RLD	RETURN LINEAR DIFFUSER
RM	ROOM
RND	ROUND
RPM	REVOLUTIONS PER MINUTE
RS	REFRIGERANT SUCTION
RTE	ROUTE
RV	RELIEF VALVE, RELIEF VENT
S	SOUTH
SA	SUPPLY AIR
SAN	SANITARY
SAU	SOUND ATTENUATING UNIT
SB	SECURITY BARS
SCHED	SCHEDULE
SMD	SMOKE DAMPER
SDC	SYSTEM DIGITAL CONTROLLER
SEC	SECONDARY
SF	SUPPLY AIR FAN
SK	SKETCH
S.L.	SOUND LINING
SLP	SLOPE
SP	STATIC PRESSURE
SPEC	SPECIFICATION(S)
SPRT	SUPPORT
SPS	STATIC PRESSURE SENSOR
SQ	SQUARE
SQ.FT	SQUARE FEET
SS	SOLIDS SEPARATOR, STAINLESS STEEL, SANITARY SEWER
SST	SYSTEM STATIC PRESSURE TOTALIZER
ST	STEAM
STD	STANDARD
SYS	SYSTEM
T	TOP
T&P	TEMPERATURE AND PRESSURE
TAO	TRANSFER AIR OPENING
TD	TRANSFER DUCT
TEFC	TOTALLY ENCLOSED FAN COOLED
TEMP	TEMPERATURE
TG	TRANSFER GRILLE, TOP GRILLE
THERM.	THERMOMETER
TOT	TOTAL
TR	TRANSFER
TSP	TOTAL STATIC PRESSURE
T'STAT	THERMOSTAT
TU	TERMINAL UNIT
TYP	TYPICAL
UB	UPBLAST
UC	UNDERCUT
UFD	UNDER FLOOR DUCT
UH	UNIT HEATER
V	VOLT, VENT, VALVE
VAC	VACUUM
VAV	VARIABLE AIR VOLUME
VB	VAPOR BARRIER OR VACUUM BREAKER
VD	VOLUME DAMPER
VEL	VELOCITY
VERT	VERTICAL
VEST.	VESTIBULE
VFC	VARIABLE FREQUENCY CONTROLLER
VFD	VARIABLE FREQUENCY DRIVE
VIB	VIBRATION
VFD	VARIABLE FREQUENCY DRIVE
VOL	VOLUME
VP	VENT PIPE
VS	VENT STACK
VTR	VENT THRU ROOF
W	WATT, WEST
W/	WITH
W/O	WITHOUT
WB	WET BULB TEMPERATURE
WC	WATER CLOSET
WFD	WATER FLOW DETECTOR
WG	WATER GAUGE
WP	WASTE PIPE
WPD	WATER PRESSURE DROP
WST	WASTE
WTR	WATER
ZV	ZONE VALVE

DOUBLE LINE DUCTWORK SYMBOLS

Symbol	Description
300x150	RECTANGULAR DUCT (FIRST FIGURE IS FOR SIDE SHOWN, SECOND FIGURE IS FOR SIDE NOT SHOWN)
300□	ROUND DUCT
300x150	FLAT OVAL DUCT (FIRST FIGURE IS FOR SIDE SHOWN, SECOND FIGURE IS FOR SIDE NOT SHOWN)
	FLOW DIRECTION ARROW
	FLEX DUCT CONNECTION
	'Z' SHAPED TRASFER AIR DUCT,
	FLEXIBLE ROUND DUCT
VD	VOLUME DAMPER
M	MOTORIZED DAMPER
B	BACK DRAFT DAMPER
FRD	FIRE DAMPER
FSD	COMBINATION FIRE/SMOKE DAMPER
SMD	SMOKE DAMPER
	DUCT TRANSITION, ROUND OR FLAT OVAL TO RECTANGULAR
	DUCT TRANSITION, RECTANGULAR TO ROUND OR FLAT OVAL
	DUCT TRANSITION, RECTANGULAR, ROUND, OR FLAT OVAL
R	INCLINED RISE W/RESPECT TO AIR FLOW, RECTANGULAR
D	INCLINED DROP W/RESPECT TO AIR FLOW, RECTANGULAR
R	INCLINED RISE W/RESPECT TO AIR FLOW, ROUND OR FLAT OVAL
D	INCLINED DROP W/RESPECT TO AIR FLOW, ROUND OR FLAT OVAL
	90° ELBOW, RECTANGULAR WITHOUT TURING VANES
	45° ELBOW, RECTANGULAR
	90° ELBOW, ROUND OR FLAT OVAL (SMOOTH OR 5 PIECE ELBOWS)
	MITERED 90° ELBOW, ROUND OR FLAT OVAL
	90° ELBOW, RECTANGULAR WITH TURING VANES
AD	ACCESS DOOR IN DUCT

Symbol	Description
	45° ELBOW, ROUND OR FLAT OVAL (SMOOTH OR 3 PIECE ELBOWS)
VD	DIVIDED FLOW FITTING
VD	TAP-IN BRANCH, RECTANGULAR
	BRANCH DUCT, CONICAL LATERAL FITTING, ROUND OR FLAT OVAL
	BRANCH DUCT, CONICAL TEE FITTING, ROUND OR FLAT OVAL
	BRANCH DUCT, "Y" FITTING, ROUND OR FLAT OVAL
	SUPPLY DUCT SECTION, RECTANGULAR
	RETURN DUCT SECTION, RECTANGULAR
	EXHAUST DUCT SECTION, RECTANGULAR
	90° ELBOW TURNED UP, RECTANGULAR [SUPPLY]
	90° ELBOW TURNED DOWN, RECTANGULAR [SUPPLY]
	90° ELBOW TURNED UP, RECTANGULAR RETURN
	90° ELBOW TURNED DOWN, RECTANGULAR RETURN
	90° ELBOW TURNED UP, RECTANGULAR EXHAUST
	90° ELBOW TURNED DOWN, RECTANGULAR EXHAUST
	90° ELBOW TURNED UP, ROUND; FLAT OVAL SIMILAR SUPPLY/RETURN/EXHAUST]
	90° ELBOW TURNED DOWN, ROUND; FLAT OVAL SIMILAR [SUPPLY/RETURN/EXHAUST]
	CEILING DIFFUSER (CD) OR GRILLE (CG) [SUPPLY]
	CEILING REGISTER (CR) OR GRILLE (CG) [RETURN OR EXHAUST]
	CEILING DIFFUSER (ARROWS INDICATE THROW DIRECTIONS)
	CEILING DIFFUSER (ARROWS INDICATE THROW DIRECTIONS)
	REGISTER OR GRILLE (ARROWS INDICATE THROW DIRECTIONS)
	CEILING DIFFUSER WITH FLEXIBLE DUCT CONNECTION (ARROWS INDICATE THROW DIRECTIONS)
S-000	LIGHT TROFFER WITH FLEXIBLE DUCT CONNECTION. "S" INDICATES SUPPLY, NUMBER INDICATES CFM
	CEILING LINEAR SLOT OR INTEGRATED CEILING DIFFUSER (CLSD) WITH FLEXIBLE DUCT CONNECTION (ARROWS INDICATE THROW DIRECTIONS)
SPS	STATIC PRESSURE SENSOR
H	HUMIDIFIER

SINGLE LINE DUCTWORK SYMBOLS

Symbol	Description
12x6	RECTANGULAR DUCT (FIRST FIGURE IS FOR SIDE SHOWN, SECOND FIGURE IS FOR SIDE NOT SHOWN)
36" Ø	ROUND DUCT
36x18	FLAT OVAL DUCT (FIRST FIGURE IS FOR SIDE SHOWN, SECOND FIGURE IS FOR SIDE NOT SHOWN)
	FLEXIBLE ROUND DUCT
	FLEXIBLE DUCT CONNECTION
	MANUAL OPPOSED BLADE VOLUME DAMPER
	MOTORIZED DAMPER
BDD	BACK DRAFT DAMPER
FRD	FIRE DAMPER, 1 1/2 HOUR FIRE RATED
3FD	FIRE DAMPER, 3 HOUR FIRE RATED
FSD	COMBINATION FIRE/SMOKE DAMPER
SMD	SMOKE DAMPER
	DUCT TRANSITION
R	INCLINED RISE W/RESPECT TO AIR FLOW, RECTANGULAR
D	INCLINED DROP W/RESPECT TO AIR FLOW, RECTANGULAR
R	INCLINED RISE W/RESPECT TO AIR FLOW, ROUND OR FLAT OVAL
D	INCLINED DROP W/RESPECT TO AIR FLOW, ROUND OR FLAT OVAL
	90° ELBOW, RECTANGULAR WITH TURNING VANES

Symbol	Description
	90° ELBOW, ROUND OR FLAT OVAL (SMOOTH OR 5-PIECE ELBOWS)
	45° ELBOW, RECTANGULAR
	45° ELBOW, ROUND OR FLAT OVAL (SMOOTH OR 3-PIECE ELBOWS)
DF	DIVIDED FLOW FITTING, RECTANGULAR
	RECTANGULAR TAP-IN BRANCH OR ROUND OR FLAT OVAL CONICAL TEE
	INCLINED CONICAL TAKE-OFF, ROUND OR FLAT OVAL
	"Y" FITTING, ROUND OR FLAT OVAL
	90° ELBOW TURNED UP, RECTANGULAR
	90° ELBOW TURNED DOWN, RECTANGULAR
	90° ELBOW TURNED UP, ROUND; FLAT OVAL SIMILAR
	90° ELBOW TURNED DOWN, ROUND; FLAT OVAL SIMILAR
	CEILING DIFFUSER (ARROWS INDICATE THROW DIRECTIONS)
	CEILING REGISTER OR GRILLE, EXHAUST OR RETURN
	CEILING REGISTER OR GRILLE, SUPPLY
SPS	STATIC PRESSURE SENSOR
	END OF DUCT RUN

CONTROLS LEGEND

Symbol	Description
FZ	FREEZESTAT
T	SPACE THERMOSTAT OR TEMP. SENSOR
	NORMALLY OPEN CONTACT
	NORMALLY CLOSED CONTACT
	OPPOSED BLADE DAMPER
N.O.	NORMALLY OPEN
N.C.	NORMALLY CLOSED
T	TEMPERATURE SENSOR
C	MOTOR STARTER HOLDING COIL
ΔP	DIFFERENTIAL PRESSURE
	TWO WAY AUTOMATIC VALVE
	THREE WAY AUTOMATIC VALVE
AI	ANALOG INPUT
AO	ANALOG OUTPUT
DI	DIGITAL INPUT
DO	DIGITAL OUTPUT
	FUSE
R	RED PILOT LIGHT
G	GREEN PILOT LIGHT
	PUMP OR FAN
M	MOTOR
R	RELAY R-1
H-O-A	HAND, OFF, AUTOMATIC
H	HUMIDITY SENSOR
SP	STATIC PRESSURE SENSOR
	CONTROL TRANSFORMER
AFMS	AIRFLOW MEASURING STATION
	HUMIDIFIER

100% SUBMITTAL

AECOM
AECOM TECHNICAL SERVICES, INC.
3101 WILSON BOULEVARD
SUITE 900
ARLINGTON, VA 22201
T: 703-682-4900 F: 703.682.4901
www.aecom.com

SEAL AREA

STATE OF MARYLAND PAUL ANDREW SABATIUK No. 13276 REGISTERED PROFESSIONAL ENGINEER

KEY PLAN

REV	DATE	DESCRIPTION	S&R BR.	CUSTOMER	PM	SECT. HEAD

	INITIALS	DATE
DRAWN BY	GS	
CHECKED BY	TN	
A-E MANAGER	EW	
ENVIRONMENTAL BRANCH	JH	
SAFETY BRANCH	CS	
CM	MMD	
PM	RWP	
CUSTOMER	JWB	
ENG. BRANCH	DGL	

MECHANICAL ABBREVIATIONS

M-001

FLIGHT PROJECTS BUILDING

NATIONAL AERONAUTICS AND SPACE ADMINISTRATION

GODDARD SPACE FLIGHT CENTER GREENBELT, MARYLAND
FACILITIES MANAGEMENT DIVISION

DATE ISSUED	CoF CODE OR WR#	AECOM PROJECT NO.	SCALE
10/12/2012	12GXAZ	60187636	1/8" = 1'-0"

FILE DATE: 10/12/2012 9:25:13 AM

AIR HANDLING UNITS SCHEDULE

MARK	LOCATION	SERVING	ECONOMIZER CFM	MAX OA CFM SETTING CFM	MIN OA CFM SETTING CFM	SUPPLY FAN QTY	SUPPLY FAN CFM	SUPPLY FAN ESP IN WG	SUPPLY FAN TOT IN WG	SUPPLY FAN FAN TYPE	SUPPLY FAN RPM	SUPPLY FAN MOTOR HP	SUPPLY FAN MOTOR QTY	SUPPLY FAN MOTOR V/Hz/PH
036-ACS001	PH	NORTH SIDE	27000	6000	3000	2	13500	2	6	PLUG	1652	20	2	460/60/3
036-ACS002	PH	SOUTH SIDE	27000	6000	3000	2	13500	2	6	PLUG	1652	20	2	460/60/3

MARK	RETURN FAN QTY	RETURN FAN CFM	RETURN FAN ESP IN WG	RETURN FAN TOT IN WG	RETURN FAN FAN TYPE	RETURN FAN RPM	RETURN FAN MOTOR HP	RETURN FAN MOTOR QTY	RETURN FAN MOTOR V/Hz/PZH
036-ACS001	3	9000	3	4.8	PLUG		15	3	460/60/3
036-ACS002	3	9000	3	4.8	PLUG		15	3	460/60/3

MARK	ENERGY WHEEL EFF. %	ENERGY WHEEL WHEEL TYPE	ENERGY WHEEL CAPACITY MBH	ENERGY WHEEL EAT F	ENERGY WHEEL LAT F	ENERGY WHEEL MAX APD IN	ENERGY WHEEL MOTOR HP
036-ACS001	79	ENTHALPY	123	95 DB/77 WB	84.8 DB/72.5 WB	0.5	1/4
036-ACS002	79	ENTHALPY	123	95 DB/77 WB	84.8 DB/72.5 WB	0.5	1/4

MARK	COOLING COIL MAX FACE VEL. (FPM)	TOTAL MBH	SENS. MBH	EAT F DB/WB	LAT F DB/WB	GPM	BRANCH SIZE, IN	EWT F	LWT F	MAX. PD AIR IN W.G	MAX. PD WATER FT.	ROWS
036-ACS001	500	1593	872	82/68	52/50	320	5.0	42	52	0.08	8	4
036-ACS002	500	1593	872	82/68	52/50	320	5.0	42	52	0.08	8	4

MARK	HEATING COIL MAX FACE VELOCITY FPM	CAPACITY MBH	EAT (F) DB	LAT (F) DB	FLOW (GPM)	BRANCH SIZE, IN	EWT (F)	LWT F (F)	MAX AIR PD (IN WG)	MAX WATER PD (FT)
036-ACS001	500	804	40	55	80	3.0	180	160	0.05	4
036-ACS002	500	804	40	55	80	3.0	180	160	0.05	4

MARK	HUMIDIFER STEAM PRESS (PSI)	HUMIDIFER CAPACITY (LBS/HR)	HUMIDIFER BRANCH SIZE (INCHES)	FILTER MAX CLEAN APD IN WG	FILTER MAX DIRTY APD	FILTER THICKNESS INCHES	FILTER MIN EFF %
036-ACS001	15	150	1 1/2"	0.05	0.2	12	85
036-ACS002	15	150	1 1/2"	0.05	0.2	12	85

NOTES:
1. UNIT SHALL BE 2" THICK DOUBLE-WALL CASING FILLED WITH THERMAL INSULATION.
2. PROVIDE WITH FACTORY MOUNTED VARIABLE FREQUENCE DRIVE/CONTROLLER, PER DIVISION 26 SPECIFICATIONS.
3. EXTERNAL STATIC PRESSURE DOES NOT INCLUDE PRESSURE DROP THROUGH ANY COMPONENTS WITHIN AHU CASING.
4. PROVIDE 12" RIGID 60-65% EFFICIENT FILTER SECTION AND FILTER.
5. UNIT SHALL BE PROVIDED WITH A SINGLE POINT CONNECTION.
6. PROVIDE WITH 12" RIGID 80%-85% EFFICENT FILTER SECTION & FILTER.
7. SUPPLY FAN SHALL BE VFD
8. RETURN FAN SHALL BE VFD IN UNISON WITH SUPPLY FAN
9. ENERGY WHEEL SHALL BE VFD.
10. FANS SHALL BE DIRECT DRIVE
11. FAN DISCHARGE SHALL BE PROVIDED WITH A QUICK ACTION MOTORIZED DAMPER PREVENTING FROM SHORT CYCLING BETWEEN TWO FANS.
12. UNIT SHALL BE PROVIDED WITH AIRSIDE ECONOMIZER
13. UNIT SHALL BR PROVIDED WITH INTERNAL VIBRATION ISOLATORS.
14. HUMIDIFIER SHALL BE DOWN STREAM OF ALL COILS AND FANS.

AIR HANDLING UNITS SCHEDULE (CONTINUATION)

MARK	LOCATION	SERVING	SOUND DATA (dB) 62.5 Hz	125 Hz	250 Hz	500 Hz	1000 Hz	2000 Hz	4000 Hz	8000 Hz	BASIS OF DESIGN	NOTES
036-ACS001	PH	NORTH SIDE	62	74	90	92	98	90	87	91	ANNEX AIR MODEL ERP-I-25-EH05-C-H-TB	1,2,3,4,5,6,7,8,9,10,11,12,13,14
036-ACS002	PH	SOUTH SIDE	62	74	90	92	98	90	87	91	ANNEX AIR MODEL ERP-I-25-EH05-C-H-TB	1,2,3,4,5,6,7,8,9,10,11,12,13,14

FAN COIL UNITS SCHEDULE

MARK	LOCATION	SERVING	SUPPLY FAN CFM	EXT SP IN WG	FAN TYPE	MOTOR QTY	HP	VOLTS	PHASE	COOLING COIL MAX FACE VEL. (FPM)	TOTAL MBH	SENS MBH	EAT F DB/WB	LAT F DB/WB	No. of Rows	GPM	BRANCH SIZE	EWT F	LWT F	MAX WATER PD (FT)	HEATING COIL MAX FACE VEL. (FPM)	TOTAL MBH	EAT F DB	LAT F DB	No. of Rows	GPM	BRANCH SIZE	EWT F	LWT F F	MAX WATER PD (FT)	FILTER THINKNESS INCHES	MIN EFF %	BASIS OF DESIGN	NOTES
036-FCU001	LEVEL 1 - NORTH	NORTH EGRESS STAIR 1	200	0	FC	1	1/20	120	1	500	3.7	3	80/67	57/55	2	1.0	3/4	42	52	0.29	600	8	55	92	2	0.5	3/4	140	120	0.46	1	30	TITUS MODEL HBE02	1,3,4,5,7,9,10
036-FCU002	LEVEL 2 - NORTH	NORTH EGRESS STAIR 1	200	0	FC	1	1/20	120	1	500	3.7	3	80/67	57/55	2	1.0	3/4	42	52	0.29	600	8	55	92	2	0.5	3/4	140	120	0.46	1	30	TITUS MODEL HBE02	1,3,4,7,9,10
036-FCU003	LEVEL 3 - NORTH	NORTH EGRESS STAIR 1	200	0	FC	1	1/20	120	1	500	3.7	3	80/67	57/55	2	1.0	3/4	42	52	0.29	600	8	55	92	2	0.5	3/4	140	120	0.46	1	30	TITUS MODEL HBE02	1,3,4,7,9,10
036-FCU004	LEVEL 4 - NORTH	NORTH EGRESS STAIR 1	200	0	FC	1	1/20	120	1	500	3.7	3	80/67	57/55	2	1.0	3/4	42	52	0.29	600	8	55	92	2	0.5	3/4	140	120	0.46	1	30	TITUS MODEL HBE02	1,3,4,7,9,10
036-FCU005	LEVEL 1 - NORTH	NORTH ELECT ROOM - N147	650	0	FC	1	1/12	120	1	500	21.5	14.4	80/67	57/55	5	4.5	3/4	42	52	5.79	NA	NA	NA	NA	NA	NA	NA	NA	NA	NA	1	30	TITUS MODEL HBE06	2,3,4,5,7,9,10
036-FCU006	LEVEL 2 - NORTH	NORTH ELECT ROOM - N247	650	0	FC	1	1/12	120	1	500	21.5	14.4	80/67	57/55	5	4.5	3/4	42	52	5.79	NA	NA	NA	NA	NA	NA	NA	NA	NA	NA	1	30	TITUS MODEL HBE06	2,3,4,7,9,10
036-FCU007	LEVEL 3 - NORTH	NORTH ELECT ROOM - N347	650	0	FC	1	1/12	120	1	500	21.5	14.4	80/67	57/55	5	4.5	3/4	42	52	5.79	NA	NA	NA	NA	NA	NA	NA	NA	NA	NA	1	30	TITUS MODEL HBE06	2,3,4,7,9,10
036-FCU008	LEVEL 4 - NORTH	NORTH ELECT ROOM - N447	650	0	FC	1	1/12	120	1	500	21.5	14.4	80/67	57/55	5	4.5	3/4	42	52	5.79	NA	NA	NA	NA	NA	NA	NA	NA	NA	NA	1	30	TITUS MODEL HBE06	2,3,4,7,9,10
036-FCU009	LEVEL 1 - SOUTH	SOUTH EGRESS STAIR 2	200	0	FC	1	1/20	120	1	500	3.7	3	80/67	57/55	2	1.0	3/4	42	52	0.29	600	8	55	92	2	0.5	3/4	140	120	0.46	1	30	TITUS MODEL HBE02	1,3,4,5,7,9,10
036-FCU010	LEVEL 2 - SOUTH	SOUTH EGRESS STAIR 2	200	0	FC	1	1/20	120	1	500	3.7	3	80/67	57/55	2	1.0	3/4	42	52	0.29	600	8	55	92	2	0.5	3/4	140	120	0.46	1	30	TITUS MODEL HBE02	1,3,4,7,9,10
036-FCU011	LEVEL 3 - SOUTH	SOUTH EGRESS STAIR 2	200	0	FC	1	1/20	120	1	500	3.7	3	80/67	57/55	2	1.0	3/4	42	52	0.29	600	8	55	92	2	0.5	3/4	140	120	0.46	1	30	TITUS MODEL HBE02	1,3,4,7,9,10
036-FCU012	LEVEL 4 - SOUTH	SOUTH EGRESS STAIR 2	200	0	FC	1	1/20	120	1	500	3.7	3	80/67	57/55	2	1.0	3/4	42	52	0.29	600	8	55	92	2	0.5	3/4	140	120	0.46	1	30	TITUS MODEL HBE02	1,3,4,7,9,10
036-FCU013	LEVEL 1 - SOUTH	SOUTH ELECT ROOM - S147	650	0	FC	1	1/12	120	1	500	21.5	14.4	80/67	57/55	5	4.5	3/4	42	52	5.79	NA	NA	NA	NA	NA	NA	NA	NA	NA	NA	1	30	TITUS MODEL HBE06	2,3,4,5,7,9,10
036-FCU014	LEVEL 2 - SOUTH	SOUTH ELECT ROOM - S247	650	0	FC	1	1/12	120	1	500	21.5	14.4	80/67	57/55	5	4.5	3/4	42	52	5.79	NA	NA	NA	NA	NA	NA	NA	NA	NA	NA	1	30	TITUS MODEL HBE06	2,3,4,7,9,10
036-FCU015	LEVEL 3 - SOUTH	SOUTH ELECT ROOM - S347	650	0	FC	1	1/12	120	1	500	21.5	14.4	80/67	57/55	5	4.5	3/4	42	52	5.79	NA	NA	NA	NA	NA	NA	NA	NA	NA	NA	1	30	TITUS MODEL HBE06	2,3,4,7,9,10
036-FCU016	LEVEL 4 - SOUTH	SOUTH ELECT ROOM - S447	650	0	FC	1	1/12	120	1	500	21.5	14.4	80/67	57/55	5	4.5	3/4	42	52	5.79	NA	NA	NA	NA	NA	NA	NA	NA	NA	NA	1	30	TITUS MODEL HBE06	2,3,4,7,9,10
036-FCU017	LEVEL 1 - SOUTH	TELECOM ROOM - C115	1280	0	FC	2	1/12	120	1	500	41.2	27.4	80/67	57/55	5	8.5	1	42	52	0.29	NA	NA	NA	NA	NA	NA	NA	NA	NA	NA	1	30	TITUS MODEL HBE12	2,3,4,5,7,9,10
036-FCU018	LEVEL 2 - SOUTH	TELECOM ROOM - C215	1280	0	FC	2	1/12	120	1	500	41.2	27.4	80/67	57/55	5	8.5	1	42	52	0.29	NA	NA	NA	NA	NA	NA	NA	NA	NA	NA	1	30	TITUS MODEL HBE12	2,3,4,7,9,10
036-FCU019	LEVEL 3 - SOUTH	TELECOM ROOM - C315	1280	0	FC	2	1/12	120	1	500	41.2	27.4	80/67	57/55	5	8.5	1	42	52	0.29	NA	NA	NA	NA	NA	NA	NA	NA	NA	NA	1	30	TITUS MODEL HBE12	2,3,4,7,9,10
036-FCU020	LEVEL 4 - SOUTH	TELECOM ROOM - C415	1280	0	FC	2	1/12	120	1	500	41.2	27.4	80/67	57/55	5	8.5	1	42	52	0.29	NA	NA	NA	NA	NA	NA	NA	NA	NA	NA	1	30	TITUS MODEL HBE12	2,3,4,7,9,10
036-FCU021	PENTHOUSE	ELEVATOR MACHINE RM	1800	0.5	FC	2	1/3	120	1	500	65.9	50.5	80/67	57/55	4	13.5	1-1/4	42	52	7.19	NA	NA	NA	NA	NA	NA	NA	NA	NA	NA	1	30	TITUS MODEL HHE20	2,4,7,8

NOTES:
1 UNIT SHALL BE HORIZONTAL EXPOSED 4-PIPE WITH FACTORY FINSIHED CABINET
2 UNIT SHALL BE HORIZONTAL EXPOSED 2-PIPE WITH FACTORY FINSHED CABINET.
3 UNIT SHALL BE HORIZONTAL EXPOSED WITH FRONT SUPPLY AND BOTTOM RETURN.
4 UNIT SHALL BE PROVIDED DISCONNECT SWITCH.
5 UNIT SHALL BE PROVIDED WITH CONDENSATE PUMP
6 UNIT SHALL BE VERTICAL EXPOSED 2-PIPE
7 UNIT SHALL BE PROVIDED WITH FACTORY PIPED (INCLUDING 2-WAY CONTROL VALVE) AND FACTORY CONTROLLER.
8 UNIT SHALL BE HORIZONTAL EXPOSED WITH DUCTED SUPPLY AND DUCTED RETURN.
9 UNIT SHALL BE PROVIDED WITH UNIT MOUNTED THERMOSTAT
10 UNIT SHALL BE PROVIDED WITH SUPPLY GRILLE, DOUBLE DEFLECTION

COMPUTER ROOM AIR CONDITIONER SCHEDULE

ITEM	SERVING	FAN CFM	FAN E.S.P. (IN)	FAN MOTOT HP, V, PH	COOLING TOT CAP	SENS	EAT	LAT	EWT	LWT	GPM	WATER PD	BRANCH	HUMIDIFIER TYPE	CAPACITY (LBS/HR)	WATER CONN SIZE (INCH)	FILTER TYPE	FILTER EFF	BASIS OF DESIGN	NOTES
036-AHU001	SERVER ROOM	750	0.3	0.5HP, 460V/60Hz/3PH	17 MBH	17 MBH	72 F	55 F	42 F	52 F	3.5	3.5 FT	3/4"	STEAM CANISTER	2-5	1/4"	PLEATED	30	ABOVE AIR VCC-018-4	1,2,3,4,5,6,7,8

NOTES:
1. UNIT SHALL BE FLOOR MOUNTED WITH FACTORY FINSHED CABINET.
2. UNIT SHALL BE TOP DISCHARGE AND ROOM RETURN.
3. UNIT SHALL BE PROVIDED WITH TOP DISCHARGE PLENUM BOX, INCLUDING FINISHED FRONT AND SIDES SUPPLY GRILLES.
4. PROVIDE SMOLE DETECTOR AND FILTER CLG ALARM.
5. UNIT SHALL BE PROVIDED WITH FACTORY DISCONNECT SWITCH.
6. UNIT SHALL BE PROVIDED WITH UNIT MOUNTED CONSENSATE PUMP.
7. UNIT SHALL BE PROVIDED WITH A LEAK DECTECTOR.
8. UNIT SHALL BE PROVIDED WITH FACTORY PIPED (INCLUDING 2-WAY CONTROL VALVE) AND FACTORY CONTROLLER.
9. HUMIDIFIER SHALL BE STREAM CANISTER.
10. UNIT SHALL BE PROVIDED WITH HUMIDITY CONTROL.

HOT HEATING WATER CONVERTER

ITEM	LOCATION	SERVICE	CAPACITY (MBH)	HOT SIDE GPM/LBS	ENT (F)	LWT (F)	MAX PRESS DROP FT (PSI)	COLD SIDE GPM	ENT (F)	LWT (F)	MAX PRESS DROP FD HD	REMARKS	PHYSICAL DIMENSION (IN)		NOTES
036-HWC001	PUMP ROOM	STEAM TO HOT WATER	4000	15	250	-	-	400	160	180	4.60	SHELL & TUBE	14x68L	TACO E14208-11L	1, 2, 3

NOTES:
1. UNIT IS STEAM-TO-HOT WATER HEAT EXCHANGER.
2. STEAM SUPPLY IS 15 PSI SATURATED.
3. UNIT SHALL BE WITHIN PHYSICAL DIMENSIONS AS SPECIFIED IN ORDER TO FIT IN THE ASSIGNED SPACES.

HEAT EXCHANGER SCHEDULE

ITEM	LOCATION	SERVICE	CAPACITY (MBH)	HOT SIDE GPM/LBS	ENT (F)	LWT (F)	MAX PRESS DROP FT (PSI)	COLD SIDE GPM	ENT (F)	LWT (F)	MAX PRESS DROP FD HD	REMARKS	PHYSICAL DIMENSION (IN)		NOTES
036-HEX001	PUMP ROOM	CHILLED WATER TO HT-CHILLED WATER	1125	450	61	56	9.5	225	42	52	2.5	PLATE & FRAME	20Lx32wx55H	TRANTER GCP-026-M-5-HR-50	1, 2

NOTES:
1. UNIT IS WATER-TO-WATER HEAT EXCHANGER.
2. UNIT SHALL BE WITHIN PHYSICAL DIMENSIONS AS SPECIFIED IN ORDER TO FIT IN THE ASSIGNED SPACES.

AIR DEVICE SCHEDULE

MARK	TYPE	CFM RANGE	FACE SIZE	THROW PATTERN	NECK SIZE (IN)	MAX P.D. (IN W.G.)	MAX NC	BASIS OF DESIGN	NOTES
CD-1	CEILING DIFFUSER	0-125	24x24	4-WAY	6 ∅	0.08	35	TITUS MODEL PAS	1,2
CD-2	CEILING DIFFUSER	126-225	24x24	4-WAY	8 ∅	0.08	35	TITUS MODEL PAS	1,2
CD-3	CEILING DIFFUSER	226-340	24x24	4-WAY	10∅	0.08	35	TITUS MODEL PAS	1,2
CD-4	CEILING DIFFUSER	341-450	24x24	4-WAY	10∅	0.08	35	TITUS MODEL PAS	1,2
CD-5	CEILING DIFFUSER	0-125	16x16	4-WAY	6 ∅	0.08	35	TITUS MODEL PAS	1,2
CD-5	CEILING DIFFUSER	126-225	16x16	4-WAY	8 ∅	0.08	35	TITUS MODEL PAS	1,2
CD-7	CEILING DIFFUSER	226-340	16x16	4-WAY	10∅	0.08	35	TITUS MODEL PAS	1,2
LD-1	LINEAR DIFFUSER	0-125	4 FT SECTION, 3/4" SLOT	1-WAY	6 ∅	0.08	35	TITUS MODEL ML-37	1,2
LD-2	LINEAR DIFFUSER	126-160	4 FT SECTION, 3/4" SLOT	1-WAY	6 ∅	0.08	35	TITUS MODEL ML-39	1,2
LR-1	LINEAR RETURN	40 CFM/FT	CONTINUOUS	NA	3" WIDTH	0.08	35	TITUS MODEL CT-540	1,2
CR-1	CEILING RETURN GRILLE	0-1000	24x24	NA	NA	0.08	35	TITUS MODEL PAR	1,3
CR-2	CEILING RETURN GRILLE	0-200	16x16	NA	8 ∅	0.08	35	TITUS MODEL PAS	1,4
CR-3	CEILING RETURN GRILLE	0-1000	24x24	NA	NA	0.08	35	TITUS MODEL PAR	1
CR-4	CEILING RETURN GRILLE	0-200	24x24	NA	8 ∅	0.08	35	TITUS MODEL PAS	1,4
SG-1	WALL SUPPLY GRILLE	ON PLAN	ON PLAN	DOUBLE DEFLECTION	ON PLAN	0.08	35	TITUS MODEL 300FL	1,2
RG-1	WALL RETURN GRILLE	-	ON PLAN	NA	ON PLAN	0.08	35	TITUS MODEL 350FL	1

NOTES:
1. COLOR SELECTED BY ARCHITECT
2. UNIT SHALL BE PROVIDED WITH EQUALIZING GRID.
3. RETURN GRILLE WITH AIR BOOT.
4. RETURN GRILLE WITH DUCT CONNECTION, SIZE ON DRAWING.

PUMPS SCHEDULES

DESIGNATION	SERVICE	TYPE	FLOW (GPM)	STATIC HEAD FT.	MOTOR HP	MOTOR V/Hz/PH	MOTOR RPM	SIZE (INCH) INLET SUCTION	SIZE (INCH) OUTLET DISCHARGE	BASIC OF DESIGN	NOTES
036-HWP001	180°F HOT WATER	END SUCTION	400	90	15	460/60/3	1760	4	3	TACO - MODEL FI3011	1,2
036-HWP002	180°F HOT WATER	END SUCTION	400	90	15	460/60/3	1760	4	3	TACO - MODEL FI3011	1,2
036-HWP003	140°F HOT WATER	IN LINE	300	90	15	460/60/3	1760	4	4	TACO - MODEL KV4013	1,2
036-HWP004	140°F HOT WATER	IN LINE	300	90	15	460/60/3	1760	4	4	TACO - MODEL KV4013	1,2
036-CWP001	CHILLED WATER	END SUCTION	800	80	25	460/60/3	1760	5	4	TACO - MODEL FI4011	1,2
036-CWP002	CHILLED WATER	END SUCTION	800	80	25	460/60/3	1760	5	4	TACO - MODEL FI4011	1,2
036-CWP003	HIGH TEMPERATURE CHILLED WATER	END SUCTION	500	90	15	460/60/3	1760	4	3	TACO - MODEL FI3011	1,2
036-CWP004	HIGH TEMPERATURE CHILLED WATER	END SUCTION	500	90	15	460/60/3	1760	4	3	TACO - MODEL FI3011	1,2

NOTES:
1. UNIT SHALL BE PROVIDED WITH VARIABLE FREQUENCY DRIVE CONTROLLER, PER DIVISION 26 SPECIFICATIONS.
2. PUMP EFFICIENCY SHALL BE AT MINIMUM 75%.

100% SUBMITTAL

AECOM

AECOM TECHNICAL SERVICES, INC.
3101 WILSON BOULEVARD
SUITE 900
ARLINGTON, VA 22201

T: 703-682-4900 F: 703.682.4901
www.aecom.com

SEAL AREA

STATE OF MARYLAND
PAUL ANDREW SABATINI
No. 13275
REGISTERED PROFESSIONAL ENGINEER

KEY PLAN

REV	DATE	DESCRIPTION	S&R BR.	CUSTOMER	PM	SECT. HEAD

	INITIALS	DATE
DRAWN BY	Designer	
CHECKED BY	PS	
A-E MANAGER	EW	
ENVIRONMENTAL BRANCH	JH	
SAFETY BRANCH	CS	
CM	MMD	
PM	RWP	
CUSTOMER	JWB	
ENG. BRANCH	DGL	

MECHANICAL SCHEDULES

M-002

FLIGHT PROJECTS BUILDING

NATIONAL AERONAUTICS AND SPACE ADMINISTRATION

GODDARD SPACE FLIGHT CENTER GREENBELT, MARYLAND
FACILITIES MANAGEMENT DIVISION

DATE ISSUED	CoF CODE OR WR#	AECOM PROJECT NO.	SCALE
10/12/2012	12GXAZ	60187636	1/8" = 1'-0"

FILE DATE: 10/24/2012 10:27:38 AM

ACTIVE CHILLED BEAM SCHEDULES

						PRIMARY AIR					CHILLED WATER			COOLING CAPACITY						HEATING WATER			HEATING CAPACITY						GENERAL
ITEM TAG	ROOM SERVED	TYPE	UNIT LENGTH (FT)	AIR PRESS (in)	NC LEVEL	FLOW (CFM)	ENTHALPY (BTU/lb)	DESIGN ENTHALPY (Btu/lb)	EAT (F)	DESIGN TEMP (F)	FLOW (GPM)	EWT (F)	PRESSURE DROP (FT)	AIR LATEN T (BTU)	AIR SENSIBLE (BTU)	WATER SENSIBLE (BTU)	TOTAL SENSIBLE (BTU)	TOTAL (BTU)	SHR	FLOW (GPM)	EWT (F)	PRESSURE DROP (FT)	DESIGN TEMP (F)	PRIMARY TEMP (F)	AIR SENSIBLE (BTU)	WATER SENSIBLE (BTU)	NET SENSIBLE (BTU)	BASIS OF DESIGN	NOTES
036-ICU001 001	N108-OFFICE	LINEAR	4	0.7	20	45	21	28	52	75	0.5	58	2.5	295	1123	1250	2373	2668	0.89	0.5	140	1.0	72	55	-830	5000	4170	Dadanco ACB35	1,2,3,4
036-ICU001 002	N114-OFFICE	LINEAR	4	0.7	20	45	21	28	52	75	0.5	58	2.5	295	1123	1250	2373	2668	0.89	0.5	140	1.0	72	55	-830	5000	4170	Dadanco ACB35	1,2,3,4
036-ICU001 003	N130A-OFFICE	LINEAR	4	0.7	20	45	21	28	52	75	0.5	58	2.5	295	1123	1250	2373	2668	0.89	0.5	140	1.0	72	55	-830	5000	4170	Dadanco ACB35	1,2,3,4
036-ICU001 004	N130B-OFFICE	LINEAR	4	0.7	20	45	21	28	52	75	0.5	58	2.5	295	1123	1250	2373	2668	0.89	0.5	140	1.0	72	55	-830	5000	4170	Dadanco ACB35	1,2,3,4
036-ICU001 005	N130C-GRAPHICS	LINEAR	4	0.7	20	50	21	28	52	75	1.1	58	5.0	327	1248	2750	3998	4325	0.92	0.5	140	1.0	72	55	-922	5000	4078	Dadanco ACB35	1,2,3,4
036-ICU001 006	N130C-GRAPHICS	LINEAR	4	0.7	20	50	21	28	52	75	1.1	58	5.0	327	1248	2750	3998	4325	0.92	0.5	140	1.0	72	55	-922	5000	4078	Dadanco ACB35	1,2,3,4
036-ICU001 007	N130C-GRAPHICS	LINEAR	4	0.7	20	50	21	28	52	75	1.1	58	5.0	327	1248	2750	3998	4325	0.92	0.5	140	1.0	72	55	-922	5000	4078	Dadanco ACB35	1,2,3,4
036-ICU001 008	N130C-GRAPHICS	LINEAR	4	0.7	20	50	21	28	52	75	1.1	58	5.0	327	1248	2750	3998	4325	0.92	0.5	140	1.0	72	55	-922	5000	4078	Dadanco ACB35	1,2,3,4
036-ICU001 009	N130D-OFFICE	LINEAR	4	0.7	20	60	21	28	52	75	0.5	58	2.5	393	1497	1250	2747	3140	0.87	0.5	140	1.0	72	55	-1107	5000	3893	Dadanco ACB35	1,2,3,4
036-ICU001 010	N130E-OFFICE	LINEAR	4	0.7	20	40	21	28	52	75	0.5	58	2.5	262	998	1250	2248	2510	0.9	0.5	140	1.0	72	55	-738	5000	4262	Dadanco ACB35	1,2,3,4
036-ICU001 011	N130F-OFFICE	LINEAR	4	0.7	20	40	21	28	52	75	0.5	58	2.5	262	998	1250	2248	2510	0.9	0.5	140	1.0	72	55	-738	5000	4262	Dadanco ACB35	1,2,3,4
036-ICU001 012	N130G-SECRETARY	LINEAR	4	0.7	20	60	21	28	52	75	1.1	58	5.0	393	1497	2750	4247	4640	0.92	0.5	140	1.0	72	55	-1107	5000	3893	Dadanco ACB35	1,2,3,4
036-ICU001 013	N130H-PROPOSAL LIB	LINEAR	4	0.7	20	40	21	28	52	75	0.5	58	2.5	262	998	1250	2248	2510	0.9	0.5	140	1.0	72	55	-738	5000	4262	Dadanco ACB35	1,2,3,4
036-ICU001 014	N130H-PROPOSAL LIB	LINEAR	4	0.7	20	40	21	28	52	75	0.5	58	2.5	262	998	1250	2248	2510	0.9	0.5	140	1.0	72	55	-738	5000	4262	Dadanco ACB35	1,2,3,4
036-ICU001 015	N130I-OFFICE	LINEAR	4	0.7	20	40	21	28	52	75	0.5	58	2.5	262	998	1250	2248	2510	0.9	0.5	140	1.0	72	55	-738	5000	4262	Dadanco ACB35	1,2,3,4
036-ICU001 016	N148-OFFICE	LINEAR	4	0.7	20	40	21	28	52	75	0.5	58	2.5	262	998	1250	2248	2510	0.9	0.5	140	1.0	72	55	-738	5000	4262	Dadanco ACB35	1,2,3,4
036-ICU001 017	N154-OFFICE	LINEAR	4	0.7	20	40	21	28	52	75	0.5	58	2.5	262	998	1250	2248	2510	0.9	0.5	140	1.0	72	55	-738	5000	4262	Dadanco ACB35	1,2,3,4
036-ICU001 018	N202-OFFICE	LINEAR	4	0.7	20	50	21	28	52	75	0.8	58	5.0	327	1248	2000	3248	3575	0.91	0.5	140	1.0	72	55	-922	5000	4078	Dadanco ACB35	1,2,3,4
036-ICU001 019	N202-OFFICE	2X4	4	0.7	20	70	21	28	52	75	1.1	58	3.0	458	1747	2750	4497	4955	0.91	0.5	140	1.0	72	55	-1291	5000	3709	Dadanco ACB40	1,2,3,5
036-ICU001 020	N204-OFFICE	LINEAR	4	0.7	20	50	21	28	52	75	0.8	58	5.0	327	1248	2000	3248	3575	0.91	0.5	140	1.0	72	55	-922	5000	4078	Dadanco ACB35	1,2,3,4
036-ICU001 021	N204-OFFICE	2X4	4	0.7	20	70	21	28	52	75	1.1	58	3.0	458	1747	2750	4497	4955	0.91	0.5	140	1.0	72	55	-1291	5000	3709	Dadanco ACB40	1,2,3,5
036-ICU001 022	N206-OFFICE	LINEAR	4	0.7	20	50	21	28	52	75	0.8	58	5.0	327	1248	2000	3248	3575	0.91	0.5	140	1.0	72	55	-922	5000	4078	Dadanco ACB35	1,2,3,4
036-ICU001 023	N206-OFFICE	2X4	4	0.7	20	70	21	28	52	75	1.1	58	3.0	458	1747	2750	4497	4955	0.91	0.5	140	1.0	72	55	-1291	5000	3709	Dadanco ACB40	1,2,3,5
036-ICU001 024	N209-OFFICE	2X4	4	0.7	20	35	21	28	52	75	0.5	58	1.5	229	873	1250	2123	2353	0.9	0.5	140	1.0	72	55	-646	5000	4354	Dadanco ACB40	1,2,3,5
036-ICU001 025	N211-OFFICE	2X4	4	0.7	20	35	21	28	52	75	0.5	58	1.5	229	873	1250	2123	2353	0.9	0.5	140	1.0	72	55	-646	5000	4354	Dadanco ACB40	1,2,3,5
036-ICU001 026	N213-OFFICE	2X4	4	0.7	20	35	21	28	52	75	0.5	58	1.5	229	873	1250	2123	2353	0.9	0.5	140	1.0	72	55	-646	5000	4354	Dadanco ACB40	1,2,3,5
036-ICU001 027	N220-WORKSTATIONS	LINEAR	4	0.7	20	50	21	28	52	75	1.1	58	5.0	327	1248	2750	3998	4325	0.92	0.5	140	1.0	72	55	-922	5000	4078	Dadanco ACB35	1,2,3,4
036-ICU001 028	N220-WORKSTATIONS	LINEAR	4	0.7	20	50	21	28	52	75	1.1	58	5.0	327	1248	2750	3998	4325	0.92	0.5	140	1.0	72	55	-922	5000	4078	Dadanco ACB35	1,2,3,4
036-ICU001 029	N220-WORKSTATIONS	LINEAR	4	0.7	20	50	21	28	52	75	1.1	58	5.0	327	1248	2750	3998	4325	0.92	0.5	140	1.0	72	55	-922	5000	4078	Dadanco ACB35	1,2,3,4
036-ICU001 030	N220-WORKSTATIONS	LINEAR	4	0.7	20	50	21	28	52	75	1.1	58	5.0	327	1248	2750	3998	4325	0.92	0.5	140	1.0	72	55	-922	5000	4078	Dadanco ACB35	1,2,3,4
036-ICU001 031	N220-WORKSTATIONS	LINEAR	4	0.7	20	50	21	28	52	75	1.1	58	5.0	327	1248	2750	3998	4325	0.92	0.5	140	1.0	72	55	-922	5000	4078	Dadanco ACB35	1,2,3,4
036-ICU001 032	N220-WORKSTATIONS	LINEAR	4	0.7	20	50	21	28	52	75	1.1	58	5.0	327	1248	2750	3998	4325	0.92	0.5	140	1.0	72	55	-922	5000	4078	Dadanco ACB35	1,2,3,4
036-ICU001 033	N220-WORKSTATIONS	LINEAR	4	0.7	20	50	21	28	52	75	1.1	58	5.0	327	1248	2750	3998	4325	0.92	0.5	140	1.0	72	55	-922	5000	4078	Dadanco ACB35	1,2,3,4
036-ICU001 034	N220-WORKSTATIONS	LINEAR	4	0.7	20	50	21	28	52	75	1.1	58	5.0	327	1248	2750	3998	4325	0.92	0.5	140	1.0	72	55	-922	5000	4078	Dadanco ACB35	1,2,3,4
036-ICU001 035	N220-WORKSTATIONS	LINEAR	4	0.7	20	50	21	28	52	75	1.1	58	5.0	327	1248	2750	3998	4325	0.92	0.5	140	1.0	72	55	-922	5000	4078	Dadanco ACB35	1,2,3,4
036-ICU001 036	N220-WORKSTATIONS	2x4	4	0.7	20	70	21	28	52	75	1.1	58	3.0	458	1747	2750	4497	4955	0.91	0.5	140	1.0	72	55	-1291	5000	3709	Dadanco ACB40	1,2,3,5
036-ICU001 037	N220-WORKSTATIONS	2x4	4	0.7	20	70	21	28	52	75	1.1	58	3.0	458	1747	2750	4497	4955	0.91	0.5	140	1.0	72	55	-1291	5000	3709	Dadanco ACB40	1,2,3,5
036-ICU001 038	N220-WORKSTATIONS	2x4	4	0.7	20	70	21	28	52	75	1.1	58	3.0	458	1747	2750	4497	4955	0.91	0.5	140	1.0	72	55	-1291	5000	3709	Dadanco ACB40	1,2,3,5
036-ICU001 039	N220-WORKSTATIONS	2x4	4	0.7	20	70	21	28	52	75	1.1	58	3.0	458	1747	2750	4497	4955	0.91	0.5	140	1.0	72	55	-1291	5000	3709	Dadanco ACB40	1,2,3,5
036-ICU001 040	N220-WORKSTATIONS	2x4	4	0.7	20	70	21	28	52	75	1.1	58	3.0	458	1747	2750	4497	4955	0.91	0.5	140	1.0	72	55	-1291	5000	3709	Dadanco ACB40	1,2,3,5
036-ICU001 041	N220-WORKSTATIONS	2x4	4	0.7	20	70	21	28	52	75	1.1	58	3.0	458	1747	2750	4497	4955	0.91	0.5	140	1.0	72	55	-1291	5000	3709	Dadanco ACB40	1,2,3,5
036-ICU001 042	N220-WORKSTATIONS	2x4	4	0.7	20	70	21	28	52	75	1.1	58	3.0	458	1747	2750	4497	4955	0.91	0.5	140	1.0	72	55	-1291	5000	3709	Dadanco ACB40	1,2,3,5
036-ICU001 043	N220-WORKSTATIONS	2x4	4	0.7	20	70	21	28	52	75	1.1	58	3.0	458	1747	2750	4497	4955	0.91	0.5	140	1.0	72	55	-1291	5000	3709	Dadanco ACB40	1,2,3,5
036-ICU001 044	N220-WORKSTATIONS	2x4	4	0.7	20	70	21	28	52	75	1.1	58	3.0	458	1747	2750	4497	4955	0.91	0.5	140	1.0	72	55	-1291	5000	3709	Dadanco ACB40	1,2,3,5
036-ICU001 045	N230A-RECEPTION	LINEAR	4	0.7	20	70	21	28	52	75	0.8	58	5.0	458	1747	2000	3747	4205	0.89	0.5	140	1.0	72	55	-1291	5000	3709	Dadanco ACB35	1,2,3,4
036-ICU001 046	N230A-RECEPTION	2X4	4	0.7	20	95	21	28	52	75	2.1	58	8.0	622	2371	5250	7621	8243	0.92	0.5	140	1.0	72	55	-1752	5000	3248	Dadanco ACB40	1,2,3,5
036-ICU001 047	N230B-OFFICE	LINEAR	4	0.7	20	55	21	28	52	75	1.1	58	5.0	360	1373	2750	4123	4483	0.92	0.5	140	1.0	72	55	-1014	5000	3986	Dadanco ACB35	1,2,3,4
036-ICU001 048	N230B-OFFICE	LINEAR	4	0.7	20	55	21	28	52	75	1.1	58	5.0	360	1373	2750	4123	4483	0.92	0.5	140	1.0	72	55	-1014	5000	3986	Dadanco ACB35	1,2,3,4
036-ICU001 049	N230B-OFFICE	LINEAR	4	0.7	20	55	21	28	52	75	1.1	58	5.0	360	1373	2750	4123	4483	0.92	0.5	140	1.0	72	55	-1014	5000	3986	Dadanco ACB35	1,2,3,4
036-ICU001 050	N230C-OFFICE	LINEAR	4	0.7	20	35	21	28	52	75	0.5	58	2.5	229	873	1250	2123	2353	0.9	0.5	140	1.0	72	55	-646	5000	4354	Dadanco ACB35	1,2,3,4
036-ICU001 051	N230C-OFFICE	2X4	4	0.7	20	35	21	28	52	75	0.5	58	1.5	229	873	1250	2123	2353	0.9	0.5	140	1.0	72	55	-646	5000	4354	Dadanco ACB40	1,2,3,5
036-ICU001 052	N230D-OFFICE	LINEAR	4	0.7	20	35	21	28	52	75	0.5	58	2.5	229	873	1250	2123	2353	0.9	0.5	140	1.0	72	55	-646	5000	4354	Dadanco ACB35	1,2,3,4
036-ICU001 053	N230D-OFFICE	2X4	4	0.7	20	35	21	28	52	75	0.5	58	1.5	229	873	1250	2123	2353	0.9	0.5	140	1.0	72	55	-646	5000	4354	Dadanco ACB40	1,2,3,5
036-ICU001 054	N230E-OFFICE	LINEAR	4	0.7	20	35	21	28	52	75	0.5	58	2.5	229	873	1250	2123	2353	0.9	0.5	140	1.0	72	55	-646	5000	4354	Dadanco ACB35	1,2,3,4
036-ICU001 055	N230E-OFFICE	2X4	4	0.7	20	35	21	28	52	75	0.5	58	1.5	229	873	1250	2123	2353	0.9	0.5	140	1.0	72	55	-646	5000	4354	Dadanco ACB40	1,2,3,5
036-ICU001 056	N230F-OFFICE	LINEAR	4	0.7	20	55	21	28	52	75	1.1	58	5.0	360	1373	2750	4123	4483	0.92	0.5	140	1.0	72	55	-1014	5000	3986	Dadanco ACB35	1,2,3,4
036-ICU001 057	N230F-OFFICE	LINEAR	4	0.7	20	55	21	28	52	75	1.1	58	5.0	360	1373	2750	4123	4483	0.92	0.5	140	1.0	72	55	-1014	5000	3986	Dadanco ACB35	1,2,3,4
036-ICU001 058	N230F-OFFICE	LINEAR	4	0.7	20	55	21	28	52	75	1.1	58	5.0	360	1373	2750	4123	4483	0.92	0.5	140	1.0	72	55	-1014	5000	3986	Dadanco ACB35	1,2,3,4
036-ICU001 059	N230G-SECRETARY	LINEAR	4	0.7	20	60	21	28	52	75	1.2	58	5.0	393	1497	3000	4497	4890	0.92	0.5	140	1.0	72	55	-1107	5000	3893	Dadanco ACB35	1,2,3,4
036-ICU001 060	N230G-SECRETARY	2X4	4	0.7	20	95	21	28	52	75	2.1	58	8.0	622	2371	5250	7621	8243	0.92	0.5	140	1.0	72	55	-1752	5000	3248	Dadanco ACB40	1,2,3,5
036-ICU001 061	N249-OFFICE	2X4	4	0.7	20	35	21	28	52	75	0.5	58	1.5	229	873	1250	2123	2353	0.9	0.5	140	1.0	72	55	-646	5000	4354	Dadanco ACB40	1,2,3,5
036-ICU001 062	N250-WORKSTATIONS	LINEAR	4	0.7	20	60	21	28	52	75	1.0	58	5.0	393	1497	2500	3997	4390	0.91	0.5	140	1.0	72	55	-1107	5000	3893	Dadanco ACB35	1,2,3,4
036-ICU001 063	N250-WORKSTATIONS	LINEAR	4	0.7	20	60	21	28	52	75	1.0	58	5.0	393	1497	2500	3997	4390	0.91	0.5	140	1.0	72	55	-1107	5000	3893	Dadanco ACB35	1,2,3,4
036-ICU001 064	N250-WORKSTATIONS	LINEAR	4	0.7	20	60	21	28	52	75	1.0	58	5.0	393	1497	2500	3997	4390	0.91	0.5	140	1.0	72	55	-1107	5000	3893	Dadanco ACB35	1,2,3,4
036-ICU001 065	N250-WORKSTATIONS	LINEAR	4	0.7	20	60	21	28	52	75	1.0	58	5.0	393	1497	2500	3997	4390	0.91	0.5	140	1.0	72	55	-1107	5000	3893	Dadanco ACB35	1,2,3,4
036-ICU001 066	N250-WORKSTATIONS	LINEAR	4	0.7	20	60	21	28	52	75	1.0	58	5.0	393	1497	2500	3997	4390	0.91	0.5	140	1.0	72	55	-1107	5000	3893	Dadanco ACB35	1,2,3,4
036-ICU001 067	N250-WORKSTATIONS	LINEAR	4	0.7	20	60	21	28	52	75	1.0	58	5.0	393	1497	2500	3997	4390	0.91	0.5	140	1.0	72	55	-1107	5000	3893	Dadanco ACB35	1,2,3,4
036-ICU001 068	N250-WORKSTATIONS	LINEAR	4	0.7	20	60	21	28	52	75	1.0	58	5.0	393	1497	2500	3997	4390	0.91	0.5	140	1.0	72	55	-1107	5000	3893	Dadanco ACB35	1,2,3,4
036-ICU001 069	N250-WORKSTATIONS	2X4	4	0.7	20	80	21	28	52	75	1.2	58	3.0	524	1996	3000	4996	5520	0.91	0.5	140	1.0	72	55	-1476	5000	3524	Dadanco ACB40	1,2,3,5
036-ICU001 070	N250-WORKSTATIONS	2X4	4	0.7	20	80	21	28	52	75	1.2	58	3.0	524	1996	3000	4996	5520	0.91	0.5	140	1.0	72	55	-1476	5000	3524	Dadanco ACB40	1,2,3,5
036-ICU001 071	N250-WORKSTATIONS	2X4	4	0.7	20	80	21	28	52	75	1.2	58	3.0	524	1996	3000	4996	5520	0.91	0.5	140	1.0	72	55	-1476	5000	3524	Dadanco ACB40	1,2,3,5
036-ICU001 072	N250-WORKSTATIONS	2X4	4	0.7	20	80	21	28	52	75	1.2	58	3.0	524	1996	3000	4996	5520	0.91	0.5	140	1.0	72	55	-1476	5000	3524	Dadanco ACB40	1,2,3,5
036-ICU001 073	N250-WORKSTATIONS	2X4	4	0.7	20	80	21	28	52	75	1.2	58	3.0	524	1996	3000	4996	5520	0.91	0.5	140	1.0	72	55	-1476	5000	3524	Dadanco ACB40	1,2,3,5
036-ICU001 074	N250-WORKSTATIONS	2X4	4	0.7	20	80	21	28	52	75	1.2	58	3.0	524	1996	3000	4996	5520	0.91	0.5	140	1.0	72	55	-1476	5000	3524	Dadanco ACB40	1,2,3,5
036-ICU001 075	N250-WORKSTATIONS	2X4	4	0.7	20	80	21	28	52	75	1.2	58	3.0	524	1996	3000	4996	5520	0.91	0.5	140	1.0	72	55	-1476	5000	3524	Dadanco ACB40	1,2,3,5
036-ICU001 076	N251-OFFICE	2X4	4	0.7	20	35	21	28	52	75	0.5	58	1.5	229	873	1250	2123	2353	0.9	0.5	140	1.0	72	55	-646	5000	4354	Dadanco ACB40	1,2,3,5
036-ICU001 077	N254-OFFICE	LINEAR	4	0.7	20	55	21	28	52	75	1.0	58	5.0	360	1373	2500	3873	4233	0.91	0.5	140	1.0	72	55	-1014	5000	3986	Dadanco ACB35	1,2,3,4
036-ICU001 078	N254-OFFICE	2X4	4	0.7	20	55	21	28	52	75	1.6	58	3.0	360	1373	4000	5373	5733	0.94	0.5	140	1.0	72	55	-1014	5000	3986	Dadanco ACB40	1,2,3,5
036-ICU001 079	N256-OFFICE	LINEAR	4	0.7	20	55	21	28	52	75	1.0	58	5.0	360	1373	2500	3873	4233	0.91	0.5	140	1.0	72	55	-1014	5000	3986	Dadanco ACB35	1,2,3,4
036-ICU001 080	N256-OFFICE	2X4	4	0.7	20	55	21	28	52	75	1.6	58	3.0	360	1373	4000	5373	5733	0.94	0.5	140	1.0	72	55	-1014	5000	3986	Dadanco ACB40	1,2,3,5
036-ICU001 081	N258-OFFICE	LINEAR	4	0.7	20	55	21	28	52	75	1.0	58	5.0	360	1373	2500	3873	4233	0.91	0.5	140	1.0	72	55	-1014	5000	3986	Dadanco ACB35	1,2,3,4
036-ICU001 082	N258-OFFICE	2X4	4	0.7	20	55	21	28	52	75	1.6	58	3.0	360	1373	4000	5373	5733	0.94	0.5	140	1.0	72	55	-1014	5000	3986	Dadanco ACB40	1,2,3,5
036-ICU001 083	N309-OFFICE	2X4	4	0.7	20	35	21	28	52	75	0.5	58	1.5	229	873	1250	2123	2353	0.9	0.5	140	1.0	72	55	-646	5000	4354	Dadanco ACB40	1,2,3,5
036-ICU001 084	N311-OFFICE	2X4	4	0.7	20	35	21	28	52	75	0.5	58	1.5	229	873	1250	2123	2353	0.9	0.5	140	1.0	72	55	-646	5000	4354	Dadanco ACB40	1,2,3,5
036-ICU001 085	N313-OFFICE	2X4	4	0.7	20	35	21	28	52	75	0.5	58	1.5	229	873	1250	2123	2353	0.9	0.5	140	1.0	72	55	-646	5000	4354	Dadanco ACB40	1,2,3,5
036-ICU001 086	N302-OFFICE	LINEAR	4	0.7	20	60	21	28	52	75	0.5	58	2.5	393	1497	1250	2747	3140	0.87	0.5	140	1.0	72	55	-1107	5000	3893	Dadanco ACB35	1,2,3,4
036-ICU001 087	N302-OFFICE	2X4	4	0.7	20	60	21	28	52	75	1.1	58	3.0	393	1497	2750	4247	4640	0.92	0.5	140	1.0	72	55	-1107	5000	3893	Dadanco ACB40	1,2,3,5
036-ICU001 088	N320-WORKSTATIONS	LINEAR	4	0.7	20	60	21	28	52	75	1.3	58	5.0	393	1497	3250	4747	5140	0.92	0.5	140	1.0	72	55	-1107	5000	3893	Dadanco ACB35	1,2,3,4
036-ICU001 089	N320-WORKSTATIONS	LINEAR	4	0.7	20	60	21	28	52	75	1.3	58	5.0	393	1497	3250	4747	5140	0.92	0.5	140	1.0	72	55	-1107	5000	3893	Dadanco ACB35	1,2,3,4
036-ICU001 090	N320-WORKSTATIONS	LINEAR	4	0.7	20	60	21	28	52	75	1.3	58	5.0	393	1497	3250	4747	5140	0.92	0.5	140	1.0	72	55	-1107	5000	3893	Dadanco ACB35	1,2,3,4
036-ICU001 091	N320-WORKSTATIONS	LINEAR	4	0.7	20	60	21	28	52	75	1.3	58	5.0	393	1497	3250	4747	5140	0.92	0.5	140	1.0	72	55	-1107	5000	3893	Dadanco ACB35	1,2,3,4
036-ICU001 092	N320-WORKSTATIONS	LINEAR	4	0.7	20	60	21	28	52	75	1.3	58	5.0	393	1497	3250	4747	5140	0.92	0.5	140	1.0	72	55	-1107	5000	3893	Dadanco ACB35	1,2,3,4
036-ICU001 093	N320-WORKSTATIONS	LINEAR	4	0.7	20	60	21	28	52	75	1.3	58	5.0	393	1497	3250	4747	5140	0.92	0.5	140	1.0	72	55	-1107	5000	3893	Dadanco ACB35	1,2,3,4
036-ICU001 094	N320-WORKSTATIONS	LINEAR	4	0.7	20	60	21	28	52	75	1.3	58	5.0	393	1497	3250	4747	5140	0.92	0.5	140	1.0	72	55	-1107	5000	3893	Dadanco ACB35	1,2,3,4
036-ICU001 095	N320-WORKSTATIONS	LINEAR	4	0.7	20	60	21	28	52	75	1.3	58	5.0	393	1497	3250	4747	5140	0.92	0.5	140	1.0	72	55	-1107	5000	3893	Dadanco ACB35	1,2,3,4
036-ICU001 096	N320-WORKSTATIONS	LINEAR	4	0.7	20	60	21	28	52	75	1.3	58	5.0	393	1497	3250	4747	5140	0.92	0.5	140	1.0	72	55	-1107	5000	3893	Dadanco ACB35	1,2,3,4
036-ICU001 097	N320-WORKSTATIONS	LINEAR	4	0.7	20	60	21	28	52	75	1.3	58	5.0	393	1497	3250	4747	5140	0.92	0.5	140	1.0	72	55	-1107	5000	3893	Dadanco ACB35	1,2,3,4
036-ICU001 098	N320-WORKSTATIONS	LINEAR	4	0.7	20	60	21	28	52	75	1.3	58	5.0	393	1497	3250	4747	5140	0.92	0.5	140	1.0	72	55	-1107	5000	3893	Dadanco ACB35	1,2,3,4
036-ICU001 099	N320-WORKSTATIONS	LINEAR	4	0.7	20	60	21	28	52	75	1.3	58	5.0	393	1497	3250	4747	5140	0.92	0.5	140	1.0	72	55	-1107	5000	3893	Dadanco ACB35	1,2,3,4
036-ICU001 100	N320-WORKSTATIONS	LINEAR	4	0.7	20	60	21	28	52	75	1.3	58	5.0	393	1497	3250	4747	5140	0.92	0.5	140	1.0	72	55	-1107	5000	3893	Dadanco ACB35	1,2,3,4
036-ICU001 101	N320-WORKSTATIONS	LINEAR	4	0.7	20	60	21	28	52	75	1.3	58	5.0	393	1497	3250	4747	5140	0.92	0.5	140	1.0	72	55	-1107	5000	3893	Dadanco ACB35	1,2,3,4
036-ICU001 102	N327-WORKSTATIONS	LINEAR	4	0.7	20	30	21	28	52	75	0.5	58	5.0	196	749	1250	1999	2195	0.91	0.5	140	1.0	72	55	-553	5000	4447	Dadanco ACB35	1,2,3,4
036-ICU001 103	N327-WORKSTATIONS	LINEAR	4	0.7	20	30	21	28	52	75	0.5	58	5.0	196	749	1250	1999	2195	0.91	0.5	140	1.0	72	55	-553	5000	4447	Dadanco ACB35	1,2,3,4
036-ICU001 104	N320-WORKSTATIONS	2X4	4	0.7	20	80	21	28	52	75	2.1	58	8.0	524	1996	5250	7246	7770	0.93	0.5	140	1.0	72	55	-1476	5000	3524	Dadanco ACB40	1,2,3,5
036-ICU001 105	N320-WORKSTATIONS	2X4	4	0.7	20	80	21	28	52	75	2.1	58	8.0	524	1996	5250	7246	7770	0.93	0.5	140	1.0	72	55	-1476	5000	3524	Dadanco ACB40	1,2,3,5
036-ICU001 106	N320-WORKSTATIONS	2X4	4	0.7	20	80	21	28	52	75	2.1	58	8.0	524	1996	5250	7246	7770	0.93	0.5	140	1.0	72	55	-1476	5000	3524	Dadanco ACB40	1,2,3,5
036-ICU001 107	N320-WORKSTATIONS	2X4	4	0.7	20	80	21	28	52	75	2.1	58	8.0	524	1996	5250	7246	7770	0.93	0.5	140	1.0	72	55	-1476	5000	3524	Dadanco ACB40	1,2,3,5
036-ICU001 108	N320-WORKSTATIONS	2X4	4	0.7	20	80	21	28	52	75	2.1	58	8.0	524	1996	5250	7246	7770	0.93	0.5	140	1.0	72	55	-1476	5000	3524	Dadanco ACB40	1,2,3,5
036-ICU001 109	N320-WORKSTATIONS	2X4	4	0.7	20	80	21	28	52	75	2.1	58	8.0	524	1996	5250	7246	7770	0.93	0.5	140	1.0	72	55	-1476	5000	3524	Dadanco ACB40	1,2,3,5
036-ICU001 110	N320-WORKSTATIONS	2X4	4	0.7	20	80	21	28	52	75	2.1	58	8.0	524	1996	5250	7246	7770	0.93	0.5	140	1.0	72	55	-1476	5000	3524	Dadanco ACB40	1,2,3,5
036-ICU001 111	N320-WORKSTATIONS	2X4	4	0.7	20	80	21	28	52	75	2.1	58	8.0	524	1996	5250	7246	7770	0.93	0.5	140	1.0	72	55	-1476	5000	3524	Dadanco ACB40	1,2,3,5
036-ICU001 112	N320-WORKSTATIONS	2X4	4	0.7	20	80	21	28	52	75	2.1	58	8.0	524	1996	5250	7246	7770	0.93	0.5	140	1.0	72	55	-1476	5000	3524	Dadanco ACB40	1,2,3,5
036-ICU001 113	N320-WORKSTATIONS	2X4	4	0.7	20	80	21	28	52	75	2.1	58	8.0	524	1996	5250	7246	7770	0.93	0.5	140	1.0	72	55	-1476	5000	3524	Dadanco ACB40	1,2,3,5
036-ICU001 114	N320-WORKSTATIONS	2X4	4	0.7	20	80	21	28	52	75	2.1	58	8.0	524	1996	5250	7246	7770	0.93	0.5	140	1.0	72	55	-1476	5000	3524	Dadanco ACB40	1,2,3,5
036-ICU001 115	N320-WORKSTATIONS	2X4	4	0.7	20	80	21	28	52	75	2.1	58	8.0	524	1996	5250	7246	7770	0.93	0.5	140	1.0	72	55	-1476	5000	3524	Dadanco ACB40	1,2,3,5
036-ICU001 116	N320-WORKSTATIONS	2X4	4	0.7	20	80	21	28	52	75	2.1	58	8.0	524	1996	5250	7246	7770	0.93	0.5	140	1.0	72	55	-1476	5000	3524	Dadanco ACB40	1,2,3,5
036-ICU001 117	N320-WORKSTATIONS	2X4	4	0.7	20	80	21	28	52	75	2.1	58	8.0	524	1996	5250	7246	7770	0.93	0.5	140	1.0	72	55	-1476	5000	3524	Dadanco ACB40	1,2,3,5
036-ICU001 118	N327-WORKSTATIONS	LINEAR	4	0.7	20	30	21	28	52	75	0.5	58	2.5	196	749	1250	1999	2195	0.91	0.5	140	1.0	72	55	-553	5000	4447	Dadanco ACB35	1,2,3,4
036-ICU001 119	N327-WORKSTATIONS	LINEAR	4	0.7	20	30	21	28	52	75	0.5	58	2.5	196	749	1250	1999	2195	0.91	0.5	140	1.0	72	55	-553	5000	4447	Dadanco ACB35	1,2,3,4
036-ICU001 120	N327-WORKSTATIONS	LINEAR	4	0.7	20	30	21	28	52	75	0.5	58	2.5	196	749	1250	1999	2195	0.91	0.5	140	1.0	72	55	-553	5000	4447	Dadanco ACB35	1,2,3,4
036-ICU001 121	N327-WORKSTATIONS	2X4	4	0.7	20	35	21	28	52	75	0.6	58	1.5	229	873	1500	2373	2603	0.91	0.5	140	1.0	72	55	-646	5000	4354	Dadanco ACB40	1,2,3,5
036-ICU001 122	N327-WORKSTATIONS	2X4	4	0.7	20	35	21	28	52	75	0.6	58	1.5	229	873	1500	2373	2603	0.91	0.5	140	1.0	72	55	-646	5000	4354	Dadanco ACB40	1,2,3,5
036-ICU001 123	N327-WORKSTATIONS	2X4	4	0.7	20	35	21	28	52	75	0.6	58	1.5	229	873	1500	2373	2603	0.91	0.5	140	1.0	72	55	-646	5000	4354	Dadanco ACB40	1,2,3,5
036-ICU001 124	N327-WORKSTATIONS	2X4	4	0.7	20	35	21	28	52	75	0.6	58	1.5	229	873	1500	2373	2603	0.91	0.5	140	1.0	72	55	-646	5000	4354	Dadanco ACB40	1,2,3,5
036-ICU001 125	N327-WORKSTATIONS	2X4	4	0.7	20	35	21	28	52	75	0.6	58	1.5	229	873	1500	2373	2603	0.91	0.5	140	1.0	72	55	-646	5000	4354	Dadanco ACB40	1,2,3,5

NOTES:

1. UNIT SHALL BE 4FT LENGTH
2. UNIT SHALL HAVE THE PERFORATED RETURN GRILLE. COLOR TO BE SELECTED BY THE ARCHITECT
3. UNIT SHALL BE PROVIDED WITH COOLING COIL AND HEATING COIL
4. THE LINEAR BEAM SHALL BE PROVIDED WITH SUPPLY AND RETURN GRILLE, 1-WAY DISCHARGE AND ADJUSTABLE DIRECTION. INTERGRAL DRAIN PAN IS REQUIRED.
5. THE 2X4 BEAM SHALL BE 2-WAY DISCHARGE

100% SUBMITTAL

AECOM

AECOM TECHNICAL SERVICES, INC.
3101 WILSON BOULEVARD
SUITE 900
ARLINGTON, VA 22201

T: 703-682-4900 F: 703.682.4901
www.aecom.com

SEAL AREA

STATE OF MARYLAND · PAUL ANDREW SABATINI · No. 13275 · REGISTERED PROFESSIONAL ENGINEER

KEY PLAN

REV	DATE	DESCRIPTION	S&R BR.	CUSTOMER	PM	SECT. HEAD

	INITIALS	DATE
DRAWN BY	Designer	
CHECKED BY	PS	
A-E MANAGER	EW	
ENVIRONMENTAL BRANCH	JH	
SAFETY BRANCH	CS	
CM	MMD	
PM	RWP	
CUSTOMER	JWB	
ENG. BRANCH	DGL	

MECHANICAL SCHEDULES

M-003

FLIGHT PROJECTS BUILDING

NATIONAL AERONAUTICS AND SPACE ADMINISTRATION

GODDARD SPACE FLIGHT CENTER GREENBELT, MARYLAND
FACILITIES MANAGEMENT DIVISION

DATE ISSUED	CoF CODE OR WR#	AECOM PROJECT NO.	SCALE
10/12/2012	12GXAZ	60187636	1/8" = 1'-0"

FILE DATE: 10/24/2012 10:27:44 AM

ACTIVE CHILLED BEAM SCHEDULES

						PRIMARY AIR					CHILLED WATER			COOLING CAPACITY						HEATING WATER			HEATING CAPACITY						GENERAL
ITEM TAG	ROOM SERVED	TYPE	UNIT LENGTH (FT)	AIR PRESS (in)	NC LEVEL	FLOW (CFM)	ENTHALPY (BTU/lb)	DESIGN ENTHALPY (Btu/lb)	EAT (F)	DESIGN TEMP (F)	FLOW (GPM)	EW T (F)	PRESSURE DROP (FT)	AIR LATENT (BTU)	AIR SENSIBLE (BTU)	WATER SENSIBLE (BTU)	TOTAL SENSIBLE (BTU)	TOTAL (BTU)	SHR	FLOW (GPM)	EWT (F)	PRESSURE DROP (FT)	DESIGN TEMP (F)	PRIMARY TEMP (F)	AIR SENSIBLE (BTU)	WATER SENSIBLE (BTU)	NET SENSIBLE (BTU)	BASIS OF DESIGN	NOTES
036-ICU001 126	N327-WORKSTATIONS	2X4	4	0.7	20	35	21	28	52	75	0.6	58	1.5	229	873	1500	2373	2603	0.91	0.5	140	1.0	72	55	-646	5000	4354	Dadanco ACB40	1,2,3,5
036-ICU001 127	N330-WORKSTATIONS	LINEAR	4	0.7	20	50	21	28	52	75	1.1	58	5.0	327	1248	2750	3998	4325	0.92	0.5	140	1.0	72	55	-922	5000	4078	Dadanco ACB35	1,2,3,4
036-ICU001 128	N330-WORKSTATIONS	LINEAR	4	0.7	20	50	21	28	52	75	1.1	58	5.0	327	1248	2750	3998	4325	0.92	0.5	140	1.0	72	55	-922	5000	4078	Dadanco ACB35	1,2,3,4
036-ICU001 129	N330-WORKSTATIONS	LINEAR	4	0.7	20	50	21	28	52	75	1.1	58	5.0	327	1248	2750	3998	4325	0.92	0.5	140	1.0	72	55	-922	5000	4078	Dadanco ACB35	1,2,3,4
036-ICU001 130	N330-WORKSTATIONS	LINEAR	4	0.7	20	50	21	28	52	75	1.1	58	5.0	327	1248	2750	3998	4325	0.92	0.5	140	1.0	72	55	-922	5000	4078	Dadanco ACB35	1,2,3,4
036-ICU001 131	N330-WORKSTATIONS	LINEAR	4	0.7	20	50	21	28	52	75	1.1	58	5.0	327	1248	2750	3998	4325	0.92	0.5	140	1.0	72	55	-922	5000	4078	Dadanco ACB35	1,2,3,4
036-ICU001 132	N330-WORKSTATIONS	2X4	4	0.7	20	50	21	28	52	75	1.6	58	3.0	327	1248	4000	5248	5575	0.94	0.5	140	1.0	72	55	-922	5000	4078	Dadanco ACB40	1,2,3,5
036-ICU001 133	N330-WORKSTATIONS	2X4	4	0.7	20	50	21	28	52	75	1.6	58	3.0	327	1248	4000	5248	5575	0.94	0.5	140	1.0	72	55	-922	5000	4078	Dadanco ACB40	1,2,3,5
036-ICU001 134	N330-WORKSTATIONS	2X4	4	0.7	20	50	21	28	52	75	1.6	58	3.0	327	1248	4000	5248	5575	0.94	0.5	140	1.0	72	55	-922	5000	4078	Dadanco ACB40	1,2,3,5
036-ICU001 135	N349-OFFICE	2X4	4	0.7	20	35	21	28	52	75	0.5	58	1.5	229	873	1250	2123	2353	0.9	0.5	140	1.0	72	55	-646	5000	4354	Dadanco ACB40	1,2,3,5
036-ICU001 136	N351-OFFICE	2X4	4	0.7	20	35	21	28	52	75	0.5	58	1.5	229	873	1250	2123	2353	0.9	0.5	140	1.0	72	55	-646	5000	4354	Dadanco ACB40	1,2,3,5
036-ICU001 137	N350-WORKSTATIONS	LINEAR	4	0.7	20	60	21	28	52	75	1.3	58	5.0	393	1497	3250	4747	5140	0.92	0.5	140	1.0	72	55	-1107	5000	3893	Dadanco ACB35	1,2,3,4
036-ICU001 138	N350-WORKSTATIONS	LINEAR	4	0.7	20	60	21	28	52	75	1.3	58	5.0	393	1497	3250	4747	5140	0.92	0.5	140	1.0	72	55	-1107	5000	3893	Dadanco ACB35	1,2,3,4
036-ICU001 139	N350-WORKSTATIONS	LINEAR	4	0.7	20	60	21	28	52	75	1.3	58	5.0	393	1497	3250	4747	5140	0.92	0.5	140	1.0	72	55	-1107	5000	3893	Dadanco ACB35	1,2,3,4
036-ICU001 140	N350-WORKSTATIONS	LINEAR	4	0.7	20	60	21	28	52	75	1.3	58	5.0	393	1497	3250	4747	5140	0.92	0.5	140	1.0	72	55	-1107	5000	3893	Dadanco ACB35	1,2,3,4
036-ICU001 141	N350-WORKSTATIONS	LINEAR	4	0.7	20	60	21	28	52	75	1.3	58	5.0	393	1497	3250	4747	5140	0.92	0.5	140	1.0	72	55	-1107	5000	3893	Dadanco ACB35	1,2,3,4
036-ICU001 142	N350-WORKSTATIONS	LINEAR	4	0.7	20	60	21	28	52	75	1.3	58	5.0	393	1497	3250	4747	5140	0.92	0.5	140	1.0	72	55	-1107	5000	3893	Dadanco ACB35	1,2,3,4
036-ICU001 143	N350-WORKSTATIONS	LINEAR	4	0.7	20	60	21	28	52	75	1.3	58	5.0	393	1497	3250	4747	5140	0.92	0.5	140	1.0	72	55	-1107	5000	3893	Dadanco ACB35	1,2,3,4
036-ICU001 144	N350-WORKSTATIONS	LINEAR	4	0.7	20	60	21	28	52	75	1.3	58	5.0	393	1497	3250	4747	5140	0.92	0.5	140	1.0	72	55	-1107	5000	3893	Dadanco ACB35	1,2,3,4
036-ICU001 145	N350-WORKSTATIONS	LINEAR	4	0.7	20	60	21	28	52	75	1.3	58	5.0	393	1497	3250	4747	5140	0.92	0.5	140	1.0	72	55	-1107	5000	3893	Dadanco ACB35	1,2,3,4
036-ICU001 146	N350-WORKSTATIONS	2X4	4	0.7	20	80	21	28	52	75	2.2	58	8.0	524	1996	5500	7496	8020	0.93	0.5	140	1.0	72	55	-1476	5000	3524	Dadanco ACB40	1,2,3,5
036-ICU001 147	N350-WORKSTATIONS	2X4	4	0.7	20	80	21	28	52	75	2.2	58	8.0	524	1996	5500	7496	8020	0.93	0.5	140	1.0	72	55	-1476	5000	3524	Dadanco ACB40	1,2,3,5
036-ICU001 148	N350-WORKSTATIONS	2X4	4	0.7	20	80	21	28	52	75	2.2	58	8.0	524	1996	5500	7496	8020	0.93	0.5	140	1.0	72	55	-1476	5000	3524	Dadanco ACB40	1,2,3,5
036-ICU001 149	N350-WORKSTATIONS	2X4	4	0.7	20	80	21	28	52	75	2.2	58	8.0	524	1996	5500	7496	8020	0.93	0.5	140	1.0	72	55	-1476	5000	3524	Dadanco ACB40	1,2,3,5
036-ICU001 150	N350-WORKSTATIONS	2X4	4	0.7	20	80	21	28	52	75	2.2	58	8.0	524	1996	5500	7496	8020	0.93	0.5	140	1.0	72	55	-1476	5000	3524	Dadanco ACB40	1,2,3,5
036-ICU001 151	N350-WORKSTATIONS	2X4	4	0.7	20	80	21	28	52	75	2.2	58	8.0	524	1996	5500	7496	8020	0.93	0.5	140	1.0	72	55	-1476	5000	3524	Dadanco ACB40	1,2,3,5
036-ICU001 152	N350-WORKSTATIONS	2X4	4	0.7	20	80	21	28	52	75	2.2	58	8.0	524	1996	5500	7496	8020	0.93	0.5	140	1.0	72	55	-1476	5000	3524	Dadanco ACB40	1,2,3,5
036-ICU001 153	N350-WORKSTATIONS	2X4	4	0.7	20	80	21	28	52	75	2.2	58	8.0	524	1996	5500	7496	8020	0.93	0.5	140	1.0	72	55	-1476	5000	3524	Dadanco ACB40	1,2,3,5
036-ICU001 154	N350-WORKSTATIONS	2X4	4	0.7	20	80	21	28	52	75	2.2	58	8.0	524	1996	5500	7496	8020	0.93	0.5	140	1.0	72	55	-1476	5000	3524	Dadanco ACB40	1,2,3,5
036-ICU001 155	N352-OFFICE	LINEAR	4	0.7	20	55	21	28	52	75	1.0	58	5.0	360	1373	2500	3873	4233	0.91	0.5	140	1.0	72	55	-1014	5000	3986	Dadanco ACB35	1,2,3,4
036-ICU001 156	N352-OFFICE	2X4	4	0.7	20	55	21	28	52	75	1.6	58	3.0	360	1373	4000	5373	5733	0.94	0.5	140	1.0	72	55	-1014	5000	3986	Dadanco ACB40	1,2,3,5
036-ICU001 157	N402-OFFICE	LINEAR	4	0.7	20	55	21	28	52	75	1.1	58	5.0	360	1373	2750	4123	4483	0.92	0.5	140	1.0	72	55	-1014	5000	3986	Dadanco ACB35	1,2,3,4
036-ICU001 158	N402-OFFICE	2X4	4	0.7	20	55	21	28	52	75	2.1	58	8.0	360	1373	5250	6623	6983	0.95	0.5	140	1.0	72	55	-1014	5000	3986	Dadanco ACB40	1,2,3,5
036-ICU001 159	N420-WORKSTATIONS	LINEAR	4	0.7	20	50	21	28	52	75	1.1	58	5.0	327	1248	2750	3998	4325	0.92	0.5	140	1.0	72	55	-922	5000	4078	Dadanco ACB35	1,2,3,4
036-ICU001 160	N420-WORKSTATIONS	2X4	4	0.7	20	70	21	28	52	75	2.1	58	8.0	458	1747	5250	6997	7455	0.94	0.5	140	1.0	72	55	-1291	5000	3709	Dadanco ACB40	1,2,3,5
036-ICU001 161	N420-WORKSTATIONS	LINEAR	4	0.7	20	50	21	28	52	75	1.1	58	5.0	327	1248	2750	3998	4325	0.92	0.5	140	1.0	72	55	-922	5000	4078	Dadanco ACB35	1,2,3,4
036-ICU001 162	N420-WORKSTATIONS	2X4	4	0.7	20	70	21	28	52	75	2.1	58	8.0	458	1747	5250	6997	7455	0.94	0.5	140	1.0	72	55	-1291	5000	3709	Dadanco ACB40	1,2,3,5
036-ICU001 163	N230B-OFFICE	LINEAR	4	0.7	20	55	21	28	52	75	1.1	58	5.0	360	1373	2750	4123	4483	0.92	0.5	140	1.0	72	55	-1014	5000	3986	Dadanco ACB35	1,2,3,4
036-ICU001 164	N230F-OFFICE	LINEAR	4	0.7	20	55	21	28	52	75	1.1	58	5.0	360	1373	2750	4123	4483	0.92	0.5	140	1.0	72	55	-1014	5000	3986	Dadanco ACB35	1,2,3,4
036-ICU001 165	N409-OFFICE	2X4	4	0.7	20	35	21	28	52	75	0.5	58	1.5	229	873	1250	2123	2353	0.9	0.5	140	1.0	72	55	-646	5000	4354	Dadanco ACB40	1,2,3,5
036-ICU001 166	N411-OFFICE	2X4	4	0.7	20	35	21	28	52	75	0.5	58	1.5	229	873	1250	2123	2353	0.9	0.5	140	1.0	72	55	-646	5000	4354	Dadanco ACB40	1,2,3,5
036-ICU001 167	N413-OFFICE	2X4	4	0.7	20	35	21	28	52	75	0.5	58	1.5	229	873	1250	2123	2353	0.9	0.5	140	1.0	72	55	-646	5000	4354	Dadanco ACB40	1,2,3,5
036-ICU001 168	N420-WORKSTATIONS	LINEAR	4	0.7	20	50	21	28	52	75	1.1	58	5.0	327	1248	2750	3998	4325	0.92	0.5	140	1.0	72	55	-922	5000	4078	Dadanco ACB35	1,2,3,4
036-ICU001 169	N420-WORKSTATIONS	LINEAR	4	0.7	20	50	21	28	52	75	1.1	58	5.0	327	1248	2750	3998	4325	0.92	0.5	140	1.0	72	55	-922	5000	4078	Dadanco ACB35	1,2,3,4
036-ICU001 170	N420-WORKSTATIONS	LINEAR	4	0.7	20	50	21	28	52	75	1.1	58	5.0	327	1248	2750	3998	4325	0.92	0.5	140	1.0	72	55	-922	5000	4078	Dadanco ACB35	1,2,3,4
036-ICU001 171	N420-WORKSTATIONS	LINEAR	4	0.7	20	50	21	28	52	75	1.1	58	5.0	327	1248	2750	3998	4325	0.92	0.5	140	1.0	72	55	-922	5000	4078	Dadanco ACB35	1,2,3,4
036-ICU001 172	N420-WORKSTATIONS	LINEAR	4	0.7	20	50	21	28	52	75	1.1	58	5.0	327	1248	2750	3998	4325	0.92	0.5	140	1.0	72	55	-922	5000	4078	Dadanco ACB35	1,2,3,4
036-ICU001 173	N420-WORKSTATIONS	LINEAR	4	0.7	20	50	21	28	52	75	1.1	58	5.0	327	1248	2750	3998	4325	0.92	0.5	140	1.0	72	55	-922	5000	4078	Dadanco ACB35	1,2,3,4
036-ICU001 174	N420-WORKSTATIONS	LINEAR	4	0.7	20	50	21	28	52	75	1.1	58	5.0	327	1248	2750	3998	4325	0.92	0.5	140	1.0	72	55	-922	5000	4078	Dadanco ACB35	1,2,3,4
036-ICU001 175	N420-WORKSTATIONS	LINEAR	4	0.7	20	50	21	28	52	75	1.1	58	5.0	327	1248	2750	3998	4325	0.92	0.5	140	1.0	72	55	-922	5000	4078	Dadanco ACB35	1,2,3,4
036-ICU001 176	N420-WORKSTATIONS	LINEAR	4	0.7	20	50	21	28	52	75	1.1	58	5.0	327	1248	2750	3998	4325	0.92	0.5	140	1.0	72	55	-922	5000	4078	Dadanco ACB35	1,2,3,4
036-ICU001 177	N420-WORKSTATIONS	LINEAR	4	0.7	20	50	21	28	52	75	1.1	58	5.0	327	1248	2750	3998	4325	0.92	0.5	140	1.0	72	55	-922	5000	4078	Dadanco ACB35	1,2,3,4
036-ICU001 178	N420-WORKSTATIONS	LINEAR	4	0.7	20	50	21	28	52	75	1.1	58	5.0	327	1248	2750	3998	4325	0.92	0.5	140	1.0	72	55	-922	5000	4078	Dadanco ACB35	1,2,3,4
036-ICU001 179	N420-WORKSTATIONS	LINEAR	4	0.7	20	50	21	28	52	75	1.1	58	5.0	327	1248	2750	3998	4325	0.92	0.5	140	1.0	72	55	-922	5000	4078	Dadanco ACB35	1,2,3,4
036-ICU001 180	N420-WORKSTATIONS	2X4	4	0.7	20	70	21	28	52	75	2.1	58	3.0	458	1747	5250	6997	7455	0.94	0.5	140	1.0	72	55	-1291	5000	3709	Dadanco ACB40	1,2,3,5
036-ICU001 181	N420-WORKSTATIONS	2X4	4	0.7	20	70	21	28	52	75	2.1	58	3.0	458	1747	5250	6997	7455	0.94	0.5	140	1.0	72	55	-1291	5000	3709	Dadanco ACB40	1,2,3,5
036-ICU001 182	N420-WORKSTATIONS	2X4	4	0.7	20	70	21	28	52	75	2.1	58	3.0	458	1747	5250	6997	7455	0.94	0.5	140	1.0	72	55	-1291	5000	3709	Dadanco ACB40	1,2,3,5
036-ICU001 183	N420-WORKSTATIONS	2X4	4	0.7	20	70	21	28	52	75	2.1	58	3.0	458	1747	5250	6997	7455	0.94	0.5	140	1.0	72	55	-1291	5000	3709	Dadanco ACB40	1,2,3,5
036-ICU001 184	N420-WORKSTATIONS	2X4	4	0.7	20	70	21	28	52	75	2.1	58	3.0	458	1747	5250	6997	7455	0.94	0.5	140	1.0	72	55	-1291	5000	3709	Dadanco ACB40	1,2,3,5
036-ICU001 185	N420-WORKSTATIONS	2X4	4	0.7	20	70	21	28	52	75	2.1	58	3.0	458	1747	5250	6997	7455	0.94	0.5	140	1.0	72	55	-1291	5000	3709	Dadanco ACB40	1,2,3,5
036-ICU001 186	N420-WORKSTATIONS	2X4	4	0.7	20	70	21	28	52	75	2.1	58	3.0	458	1747	5250	6997	7455	0.94	0.5	140	1.0	72	55	-1291	5000	3709	Dadanco ACB40	1,2,3,5
036-ICU001 187	N420-WORKSTATIONS	2X4	4	0.7	20	70	21	28	52	75	2.1	58	3.0	458	1747	5250	6997	7455	0.94	0.5	140	1.0	72	55	-1291	5000	3709	Dadanco ACB40	1,2,3,5
036-ICU001 188	N420-WORKSTATIONS	2X4	4	0.7	20	70	21	28	52	75	2.1	58	3.0	458	1747	5250	6997	7455	0.94	0.5	140	1.0	72	55	-1291	5000	3709	Dadanco ACB40	1,2,3,5
036-ICU001 189	N420-WORKSTATIONS	2X4	4	0.7	20	70	21	28	52	75	2.1	58	3.0	458	1747	5250	6997	7455	0.94	0.5	140	1.0	72	55	-1291	5000	3709	Dadanco ACB40	1,2,3,5
036-ICU001 190	N420-WORKSTATIONS	2X4	4	0.7	20	70	21	28	52	75	2.1	58	3.0	458	1747	5250	6997	7455	0.94	0.5	140	1.0	72	55	-1291	5000	3709	Dadanco ACB40	1,2,3,5
036-ICU001 191	N420-WORKSTATIONS	2X4	4	0.7	20	70	21	28	52	75	2.1	58	3.0	458	1747	5250	6997	7455	0.94	0.5	140	1.0	72	55	-1291	5000	3709	Dadanco ACB40	1,2,3,5
036-ICU001 192	N427-WORKSTATIONS	LINEAR	4	0.7	20	30	21	28	52	75	0.5	58	2.5	196	749	1250	1999	2195	0.91	0.5	140	1.0	72	55	-553	5000	4447	Dadanco ACB35	1,2,3,4
036-ICU001 193	N427-WORKSTATIONS	LINEAR	4	0.7	20	30	21	28	52	75	0.5	58	2.5	196	749	1250	1999	2195	0.91	0.5	140	1.0	72	55	-553	5000	4447	Dadanco ACB35	1,2,3,4
036-ICU001 194	N427-WORKSTATIONS	LINEAR	4	0.7	20	30	21	28	52	75	0.5	58	2.5	196	749	1250	1999	2195	0.91	0.5	140	1.0	72	55	-553	5000	4447	Dadanco ACB35	1,2,3,4
036-ICU001 195	N427-WORKSTATIONS	LINEAR	4	0.7	20	30	21	28	52	75	0.5	58	2.5	196	749	1250	1999	2195	0.91	0.5	140	1.0	72	55	-553	5000	4447	Dadanco ACB35	1,2,3,4
036-ICU001 196	N427-WORKSTATIONS	LINEAR	4	0.7	20	30	21	28	52	75	0.5	58	2.5	196	749	1250	1999	2195	0.91	0.5	140	1.0	72	55	-553	5000	4447	Dadanco ACB35	1,2,3,4
036-ICU001 197	N427-WORKSTATIONS	LINEAR	4	0.7	20	30	21	28	52	75	0.5	58	2.5	196	749	1250	1999	2195	0.91	0.5	140	1.0	72	55	-553	5000	4447	Dadanco ACB40	1,2,3,5
036-ICU001 198	N427-WORKSTATIONS	2X4	4	0.7	20	35	21	28	52	75	0.5	58	1.5	229	873	1250	2123	2353	0.9	0.5	140	1.0	72	55	-646	5000	4354	Dadanco ACB40	1,2,3,5
036-ICU001 199	N427-WORKSTATIONS	2X4	4	0.7	20	35	21	28	52	75	0.5	58	1.5	229	873	1250	2123	2353	0.9	0.5	140	1.0	72	55	-646	5000	4354	Dadanco ACB40	1,2,3,5
036-ICU001 200	N427-WORKSTATIONS	2X4	4	0.7	20	35	21	28	52	75	0.5	58	1.5	229	873	1250	2123	2353	0.9	0.5	140	1.0	72	55	-646	5000	4354	Dadanco ACB40	1,2,3,5
036-ICU001 201	N427-WORKSTATIONS	2X4	4	0.7	20	35	21	28	52	75	0.5	58	1.5	229	873	1250	2123	2353	0.9	0.5	140	1.0	72	55	-646	5000	4354	Dadanco ACB40	1,2,3,5
036-ICU001 202	N427-WORKSTATIONS	2X4	4	0.7	20	35	21	28	52	75	0.5	58	1.5	229	873	1250	2123	2353	0.9	0.5	140	1.0	72	55	-646	5000	4354	Dadanco ACB40	1,2,3,5
036-ICU001 203	N427-WORKSTATIONS	2X4	4	0.7	20	35	21	28	52	75	0.5	58	1.5	229	873	1250	2123	2353	0.9	0.5	140	1.0	72	55	-646	5000	4354	Dadanco ACB40	1,2,3,5
036-ICU001 204	N430-WORKSTATIONS	LINEAR	4	0.7	20	55	21	28	52	75	0.6	58	2.5	360	1373	1500	2873	3233	0.89	0.5	140	1.0	72	55	-1014	5000	3986	Dadanco ACB35	1,2,3,4
036-ICU001 205	N430-WORKSTATIONS	LINEAR	4	0.7	20	55	21	28	52	75	0.6	58	2.5	360	1373	1500	2873	3233	0.89	0.5	140	1.0	72	55	-1014	5000	3986	Dadanco ACB35	1,2,3,4
036-ICU001 206	N430-WORKSTATIONS	LINEAR	4	0.7	20	55	21	28	52	75	0.6	58	2.5	360	1373	1500	2873	3233	0.89	0.5	140	1.0	72	55	-1014	5000	3986	Dadanco ACB35	1,2,3,4
036-ICU001 207	N430-WORKSTATIONS	LINEAR	4	0.7	20	55	21	28	52	75	0.6	58	2.5	360	1373	1500	2873	3233	0.89	0.5	140	1.0	72	55	-1014	5000	3986	Dadanco ACB35	1,2,3,4
036-ICU001 208	N430-WORKSTATIONS	2X4	4	0.7	20	60	21	28	52	75	1.4	58	3.0	393	1497	3500	4997	5390	0.93	0.5	140	1.0	72	55	-1107	5000	3893	Dadanco ACB40	1,2,3,5
036-ICU001 209	N430-WORKSTATIONS	2X4	4	0.7	20	60	21	28	52	75	1.4	58	3.0	393	1497	3500	4997	5390	0.93	0.5	140	1.0	72	55	-1107	5000	3893	Dadanco ACB40	1,2,3,5
036-ICU001 210	N430-WORKSTATIONS	2X4	4	0.7	20	60	21	28	52	75	1.4	58	3.0	393	1497	3500	4997	5390	0.93	0.5	140	1.0	72	55	-1107	5000	3893	Dadanco ACB40	1,2,3,5
036-ICU001 211	N450-WORKSTATIONS	LINEAR	4	0.7	20	50	21	28	52	75	1.3	58	5.0	327	1248	3250	4498	4825	0.93	0.5	140	1.0	72	55	-922	5000	4078	Dadanco ACB40	1,2,3,5
036-ICU001 212	N450-WORKSTATIONS	LINEAR	4	0.7	20	50	21	28	52	75	1.3	58	5.0	327	1248	3250	4498	4825	0.93	0.5	140	1.0	72	55	-922	5000	4078	Dadanco ACB35	1,2,3,4
036-ICU001 213	N450-WORKSTATIONS	LINEAR	4	0.7	20	50	21	28	52	75	1.3	58	5.0	327	1248	3250	4498	4825	0.93	0.5	140	1.0	72	55	-922	5000	4078	Dadanco ACB35	1,2,3,4
036-ICU001 214	N450-WORKSTATIONS	LINEAR	4	0.7	20	50	21	28	52	75	1.3	58	5.0	327	1248	3250	4498	4825	0.93	0.5	140	1.0	72	55	-922	5000	4078	Dadanco ACB35	1,2,3,4
036-ICU001 215	N450-WORKSTATIONS	LINEAR	4	0.7	20	50	21	28	52	75	1.3	58	5.0	327	1248	3250	4498	4825	0.93	0.5	140	1.0	72	55	-922	5000	4078	Dadanco ACB35	1,2,3,4
036-ICU001 216	N450-WORKSTATIONS	LINEAR	4	0.7	20	50	21	28	52	75	1.3	58	5.0	327	1248	3250	4498	4825	0.93	0.5	140	1.0	72	55	-922	5000	4078	Dadanco ACB35	1,2,3,4
036-ICU001 217	N450-WORKSTATIONS	2X4	4	0.7	20	75	21	28	52	75	2.1	58	8.0	491	1872	5250	7122	7613	0.94	0.5	140	1.0	72	55	-1383	5000	3617	Dadanco ACB35	1,2,3,4
036-ICU001 218	N450-WORKSTATIONS	2X4	4	0.7	20	75	21	28	52	75	2.1	58	8.0	491	1872	5250	7122	7613	0.94	0.5	140	1.0	72	55	-1383	5000	3617	Dadanco ACB40	1,2,3,5
036-ICU001 219	N450-WORKSTATIONS	2X4	4	0.7	20	75	21	28	52	75	2.1	58	8.0	491	1872	5250	7122	7613	0.94	0.5	140	1.0	72	55	-1383	5000	3617	Dadanco ACB40	1,2,3,5
036-ICU001 220	N450-WORKSTATIONS	2X4	4	0.7	20	75	21	28	52	75	2.1	58	8.0	491	1872	5250	7122	7613	0.94	0.5	140	1.0	72	55	-1383	5000	3617	Dadanco ACB40	1,2,3,5
036-ICU001 221	N450-WORKSTATIONS	2X4	4	0.7	20	75	21	28	52	75	2.1	58	8.0	491	1872	5250	7122	7613	0.94	0.5	140	1.0	72	55	-1383	5000	3617	Dadanco ACB40	1,2,3,5
036-ICU001 222	N450-WORKSTATIONS	2X4	4	0.7	20	75	21	28	52	75	2.1	58	8.0	491	1872	5250	7122	7613	0.94	0.5	140	1.0	72	55	-1383	5000	3617	Dadanco ACB40	1,2,3,5
036-ICU001 223	N450-WORKSTATIONS	LINEAR	4	0.7	20	50	21	28	52	75	1.3	58	5.0	327	1248	3250	4498	4825	0.93	0.5	140	1.0	72	55	-922	5000	4078	Dadanco ACB40	1,2,3,5
036-ICU001 224	N450-WORKSTATIONS	2X4	4	0.7	20	75	21	28	52	75	2.1	58	8.0	491	1872	5250	7122	7613	0.94	0.5	140	1.0	72	55	-1383	5000	3617	Dadanco ACB35	1,2,3,4
036-ICU001 225	N450-WORKSTATIONS	LINEAR	4	0.7	20	50	21	28	52	75	1.3	58	5.0	327	1248	3250	4498	4825	0.93	0.5	140	1.0	72	55	-922	5000	4078	Dadanco ACB40	1,2,3,5
036-ICU001 226	N450-WORKSTATIONS	2X4	4	0.7	20	75	21	28	52	75	2.1	58	8.0	491	1872	5250	7122	7613	0.94	0.5	140	1.0	72	55	-1383	5000	3617	Dadanco ACB35	1,2,3,4
036-ICU001 227	N450-WORKSTATIONS	LINEAR	4	0.7	20	50	21	28	52	75	1.3	58	5.0	327	1248	3250	4498	4825	0.93	0.5	140	1.0	72	55	-922	5000	4078	Dadanco ACB40	1,2,3,5
036-ICU001 228	N450-WORKSTATIONS	2X4	4	0.7	20	75	21	28	52	75	2.1	58	8.0	491	1872	5250	7122	7613	0.94	0.5	140	1.0	72	55	-1383	5000	3617	Dadanco ACB35	1,2,3,4
036-ICU001 229	N458-OFFICE	LINEAR	4	0.7	20	50	21	28	52	75	1.1	58	5.0	327	1248	2750	3998	4325	0.92	0.5	140	1.0	72	55	-922	5000	4078	Dadanco ACB40	1,2,3,5
036-ICU001 230	N458-OFFICE	2X4	4	0.7	20	55	21	28	52	75	1.0	58	3.0	360	1373	2500	3873	4233	0.91	0.5	140	1.0	72	55	-1014	5000	3986	Dadanco ACB35	1,2,3,4
036-ICU001 231	N449-OFFICE	2X4	4	0.7	20	35	21	28	52	75	0.5	58	1.5	229	873	1250	2123	2353	0.9	0.5	140	1.0	72	55	-646	5000	4354	Dadanco ACB40	1,2,3,5
036-ICU001 232	N451-OFFICE	2X4	4	0.7	20	35	21	28	52	75	0.5	58	1.5	229	873	1250	2123	2353	0.9	0.5	140	1.0	72	55	-646	5000	4354	Dadanco ACB40	1,2,3,5
036-ICU002 001	S154-OFFICE	LINEAR	4	0.7	20	40	21	28	52	75	0.5	58	2.5	262	998	1250	2248	2510	0.9	0.5	140	1.0	72	55	-738	5000	4262	Dadanco ACB35	1,2,3,4
036-ICU002 002	S156-OFFICE	LINEAR	4	0.7	20	40	21	28	52	75	0.5	58	2.5	262	998	1250	2248	2510	0.9	0.5	140	1.0	72	55	-738	5000	4262	Dadanco ACB35	1,2,3,4
036-ICU002 003	S158-OFFICE	LINEAR	4	0.7	20	40	21	28	52	75	0.5	58	2.5	262	998	1250	2248	2510	0.9	0.5	140	1.0	72	55	-738	5000	4262	Dadanco ACB35	1,2,3,4
036-ICU002 004	S102-OFFICE	LINEAR	4	0.7	20	50	21	28	52	75	0.5	58	2.5	327	1248	1250	2498	2825	0.88	0.5	140	1.0	72	55	-922	5000	4078	Dadanco ACB35	1,2,3,4
036-ICU002 005	S104-OFFICE	LINEAR	4	0.7	20	50	21	28	52	75	0.5	58	2.5	327	1248	1250	2498	2825	0.88	0.5	140	1.0	72	55	-922	5000	4078	Dadanco ACB35	1,2,3,4
036-ICU002 006	S106-OFFICE	LINEAR	4	0.7	20	50	21	28	52	75	0.5	58	2.5	327	1248	1250	2498	2825	0.88	0.5	140	1.0	72	55	-922	5000	4078	Dadanco ACB35	1,2,3,4
036-ICU002 007	S109-OFFICE	2X4	4	0.7	20	35	21	28	52	75	0.5	58	1.5	229	873	1250	2123	2353	0.9	0.5	140	1.0	72	55	-646	5000	4354	Dadanco ACB40	1,2,3,5
036-ICU002 008	S111-OFFICE	2X4	4	0.7	20	35	21	28	52	75	0.5	58	1.5	229	873	1250	2123	2353	0.9	0.5	140	1.0	72	55	-646	5000	4354	Dadanco ACB40	1,2,3,5
036-ICU002 009	S113-OFFICE	2X4	4	0.7	20	35	21	28	52	75	0.5	58	1.5	229	873	1250	2123	2353	0.9	0.5	140	1.0	72	55	-646	5000	4354	Dadanco ACB40	1,2,3,5
036-ICU002 010	S120-WORKSTATIONS	2X4	4	0.7	20	90	21	28	52	75	1.9	58	6.0	589	2246	4750	6996	7585	0.92	0.5	140	1.0	72	55	-1660	5000	3340	Dadanco ACB40	1,2,3,5
036-ICU002 011	S120-WORKSTATIONS	2X4	4	0.7	20	90	21	28	52	75	1.9	58	6.0	589	2246	4750	6996	7585	0.92	0.5	140	1.0	72	55	-1660	5000	3340	Dadanco ACB40	1,2,3,5
036-ICU002 012	S120-WORKSTATIONS	2X4	4	0.7	20	90	21	28	52	75	1.9	58	6.0	589	2246	4750	6996	7585	0.92	0.5	140	1.0	72	55	-1660	5000	3340	Dadanco ACB40	1,2,3,5
036-ICU002 013	S120-WORKSTATIONS	2X4	4	0.7	20	90	21	28	52	75	1.9	58	6.0	589	2246	4750	6996	7585	0.92	0.5	140	1.0	72	55	-1660	5000	3340	Dadanco ACB40	1,2,3,5
036-ICU002 014	S120-WORKSTATIONS	2X4	4	0.7	20	90	21	28	52	75	1.9	58	6.0	589	2246	4750	6996	7585	0.92	0.5	140	1.0	72	55	-1660	5000	3340	Dadanco ACB40	1,2,3,5
036-ICU002 015	S120-WORKSTATIONS	2X4	4	0.7	20	90	21	28	52	75	1.9	58	6.0	589	2246	4750	6996	7585	0.92	0.5	140	1.0	72	55	-1660	5000	3340	Dadanco ACB40	1,2,3,5
036-ICU002 016	S120-WORKSTATIONS	2X4	4	0.7	20	90	21	28	52	75	1.9	58	6.0	589	2246	4750	6996	7585	0.92	0.5	140	1.0	72	55	-1660	5000	3340	Dadanco ACB40	1,2,3,5
036-ICU002 017	S120-WORKSTATIONS	2X4	4	0.7	20	90	21	28	52	75	1.9	58	6.0	589	2246	4750	6996	7585	0.92	0.5	140	1.0	72	55	-1660	5000	3340	Dadanco ACB40	1,2,3,5
036-ICU002 018	S120-WORKSTATIONS	2X4	4	0.7	20	90	21	28	52	75	1.9	58	6.0	589	2246	4750	6996	7585	0.92	0.5	140	1.0	72	55	-1660	5000	3340	Dadanco ACB40	1,2,3,5
036-ICU002 019	S130A-RECEPTION	LINEAR	4	0.7	20	40	21	28	52	75	0.6	58	2.5	262	998	1500	2498	2760	0.91	0.5	140	1.0	72	55	-738	5000	4262	Dadanco ACB35	1,2,3,4
036-ICU002 020	S130A-RECEPTION	2x4	4	0.7	20	40	21	28	52	75	1.3	58	3.0	262	998	3250	4248	4510	0.94	0.5	140	1.0	72	55	-738	5000	4262	Dadanco ACB40	1,2,3,5
036-ICU002 021	S130B-OFFICE	LINEAR	4	0.7	20	40	21	28	52	75	0.5	58	2.5	262	998	1250	2248	2510	0.9	0.5	140	1.0	72	55	-738	5000	4262	Dadanco ACB35	1,2,3,4
036-ICU002 022	S130B-OFFICE	LINEAR	4	0.7	20	40	21	28	52	75	0.5	58	2.5	262	998	1250	2248	2510	0.9	0.5	140	1.0	72	55	-738	5000	4262	Dadanco ACB35	1,2,3,4

NOTES:

1 UNIT SHALL BE 4FT LENGTH
2 UNIT SHALL HAVE THE PERFORATED RETURN GRILLE. COLOR TO BE SELECTED BY THE ARCHITECT
3 UNIT SHALL BE PROVIDED WITH COOLING COIL AND HEATING COIL
4 THE LINEAR BEAM SHALL BE PROVIDED WITH SUPPLY AND RETURN GRILLE, 1-WAY DISCHARGE AND ADJUSTABLE DIRECTION. INTERGRAL DRAIN PAN IS REQUIRED.
5 THE 2X4 BEAM SHALL BE 2-WAY DISCHARGE

100% SUBMITTAL

AECOM

AECOM TECHNICAL SERVICES, INC.
3101 WILSON BOULEVARD
SUITE 900
ARLINGTON, VA 22201

T: 703-682-4900 F: 703.682.4901
www.aecom.com

SEAL AREA

STATE OF MARYLAND
PAUL ANDREW SABATIUK
No. 13275
REGISTERED PROFESSIONAL ENGINEER

KEY PLAN

REV	DATE	DESCRIPTION	S&R BR.	CUSTOMER	PM	SECT. HEAD

	INITIALS	DATE
DRAWN BY	Designer	
CHECKED BY	PS	
A-E MANAGER	EW	
ENVIRONMENTAL BRANCH	JH	
SAFETY BRANCH	CS	
CM	MMD	
PM	RWP	
CUSTOMER	JWB	
ENG. BRANCH	DGL	

MECHANICAL SCHEDULES

M-004

FLIGHT PROJECTS BUILDING

NATIONAL AERONAUTICS AND SPACE ADMINISTRATION

GODDARD SPACE FLIGHT CENTER GREENBELT, MARYLAND
FACILITIES MANAGEMENT DIVISION

DATE ISSUED	CoF CODE OR WR#	AECOM PROJECT NO.	SCALE
10/12/2012	12GXAZ	60187636	1/8" = 1'-0"

FILE DATE: 10/24/2012 10:27:50 AM

ACTIVE CHILLED BEAM SCHEDULES

						PRIMARY AIR					CHILLED WATER			COOLING CAPACITY						HEATING WATER			HEATING CAPACITY						GENERAL
ITEM TAG	ROOM SERVED	TYPE	UNIT LENGTH (FT)	AIR PRESS (in)	NC LEVEL	FLOW (CFM)	ENTHALPY (BTU/lb)	DESIGN ENTHALPY (Btu/lb)	EAT (F)	DESIGN TEMP (F)	FLOW (GPM)	EWT (F)	PRESSURE DROP (FT)	AIR LATENT (BTU)	AIR SENSIBLE (BTU)	WATER SENSIBLE (BTU)	TOTAL SENSIBLE (BTU)	TOTAL (BTU)	SHR	FLOW (GPM)	EWT (F)	PRESSURE DROP (FT)	DESIGN TEMP (F)	PRIMARY TEMP (F)	AIR SENSIBLE (BTU)	WATER SENSIBLE (BTU)	NET SENSIBLE (BTU)	BASIS OF DESIGN	NOTES
036-ICU002 023	S130C-OFFICE	LINEAR	4	0.7	20	40	21	28	52	75	0.5	58	2.5	262	998	1250	2248	2510	0.9	0.5	140	1.0	72	55	-738	5000	4262	Dadanco ACB35	1,2,3,4
036-ICU002 024	S130C-OFFICE	2x4	4	0.7	20	40	21	28	52	75	0.5	58	1.5	262	998	1250	2248	2510	0.9	0.5	140	1.0	72	55	-738	5000	4262	Dadanco ACB40	1,2,3,5
036-ICU002 025	S130D-OFFICE	LINEAR	4	0.7	20	40	21	28	52	75	0.5	58	2.5	262	998	1250	2248	2510	0.9	0.5	140	1.0	72	55	-738	5000	4262	Dadanco ACB35	1,2,3,4
036-ICU002 026	S130D-OFFICE	2x4	4	0.7	20	40	21	28	52	75	0.5	58	1.5	262	998	1250	2248	2510	0.9	0.5	140	1.0	72	55	-738	5000	4262	Dadanco ACB40	1,2,3,5
036-ICU002 027	S130F-OFFICE	LINEAR	4	0.7	20	40	21	28	52	75	0.5	58	2.5	262	998	1250	2248	2510	0.9	0.5	140	1.0	72	55	-738	5000	4262	Dadanco ACB35	1,2,3,4
036-ICU002 028	S130F-OFFICE	2x4	4	0.7	20	40	21	28	52	75	0.5	58	1.5	262	998	1250	2248	2510	0.9	0.5	140	1.0	72	55	-738	5000	4262	Dadanco ACB40	1,2,3,5
036-ICU002 029	S130G-OFFICE	LINEAR	4	0.7	20	40	21	28	52	75	0.5	58	2.5	262	998	1250	2248	2510	0.9	0.5	140	1.0	72	55	-738	5000	4262	Dadanco ACB35	1,2,3,4
036-ICU002 030	S130G-OFFICE	LINEAR	4	0.7	20	40	21	28	52	75	0.5	58	2.5	262	998	1250	2248	2510	0.9	0.5	140	1.0	72	55	-738	5000	4262	Dadanco ACB35	1,2,3,4
036-ICU002 031	S130H-SECRETARY	LINEAR	4	0.7	20	40	21	28	52	75	0.5	58	2.5	262	998	1250	2248	2510	0.9	0.5	140	1.0	72	55	-738	5000	4262	Dadanco ACB35	1,2,3,4
036-ICU002 032	S130H-SECRETARY	2x4	4	0.7	20	40	21	28	52	75	0.5	58	1.5	262	998	1250	2248	2510	0.9	0.5	140	1.0	72	55	-738	5000	4262	Dadanco ACB40	1,2,3,5
036-ICU002 033	S149-OFFICE	2X4	4	0.7	20	35	21	28	52	75	0.5	58	1.5	229	873	1250	2123	2353	0.9	0.5	140	1.0	72	55	-646	5000	4354	Dadanco ACB40	1,2,3,5
036-ICU002 034	S150-WORKSTATIONS	2X4	4	0.7	20	45	21	28	52	75	1.4	58	3.0	295	1123	3500	4623	4918	0.94	0.5	140	1.0	72	55	-830	5000	4170	Dadanco ACB40	1,2,3,5
036-ICU002 035	S150-WORKSTATIONS	2X4	4	0.7	20	45	21	28	52	75	1.4	58	3.0	295	1123	3500	4623	4918	0.94	0.5	140	1.0	72	55	-830	5000	4170	Dadanco ACB40	1,2,3,5
036-ICU002 036	S150-WORKSTATIONS	2X4	4	0.7	20	45	21	28	52	75	1.4	58	3.0	295	1123	3500	4623	4918	0.94	0.5	140	1.0	72	55	-830	5000	4170	Dadanco ACB40	1,2,3,5
036-ICU002 037	S150-WORKSTATIONS	2X4	4	0.7	20	45	21	28	52	75	1.4	58	3.0	295	1123	3500	4623	4918	0.94	0.5	140	1.0	72	55	-830	5000	4170	Dadanco ACB40	1,2,3,5
036-ICU002 038	S150-WORKSTATIONS	2X4	4	0.7	20	45	21	28	52	75	1.4	58	3.0	295	1123	3500	4623	4918	0.94	0.5	140	1.0	72	55	-830	5000	4170	Dadanco ACB40	1,2,3,5
036-ICU002 039	S150-WORKSTATIONS	2X4	4	0.7	20	45	21	28	52	75	1.4	58	3.0	295	1123	3500	4623	4918	0.94	0.5	140	1.0	72	55	-830	5000	4170	Dadanco ACB40	1,2,3,5
036-ICU002 040	S150-WORKSTATIONS	2X4	4	0.7	20	45	21	28	52	75	1.4	58	3.0	295	1123	3500	4623	4918	0.94	0.5	140	1.0	72	55	-830	5000	4170	Dadanco ACB40	1,2,3,5
036-ICU002 041	S151-OFFICE	2X4	4	0.7	20	35	21	28	52	75	0.5	58	1.5	229	873	1250	2123	2353	0.9	0.5	140	1.0	72	55	-646	5000	4354	Dadanco ACB40	1,2,3,5
036-ICU002 042	S202-OFFICE	LINEAR	4	0.7	20	60	21	28	52	75	1.0	58	5.0	393	1497	2500	3997	4390	0.91	0.5	140	1.0	72	55	-1107	5000	3893	Dadanco ACB35	1,2,3,4
036-ICU002 043	S202-OFFICE	2X4	4	0.7	20	60	21	28	52	75	1.0	58	3.0	393	1497	2500	3997	4390	0.91	0.5	140	1.0	72	55	-1107	5000	3893	Dadanco ACB40	1,2,3,5
036-ICU002 044	S204-OFFICE	LINEAR	4	0.7	20	60	21	28	52	75	1.0	58	5.0	393	1497	2500	3997	4390	0.91	0.5	140	1.0	72	55	-1107	5000	3893	Dadanco ACB35	1,2,3,4
036-ICU002 045	S204-OFFICE	2X4	4	0.7	20	60	21	28	52	75	1.0	58	3.0	393	1497	2500	3997	4390	0.91	0.5	140	1.0	72	55	-1107	5000	3893	Dadanco ACB40	1,2,3,5
036-ICU002 046	S206-OFFICE	LINEAR	4	0.7	20	60	21	28	52	75	1.0	58	5.0	393	1497	2500	3997	4390	0.91	0.5	140	1.0	72	55	-1107	5000	3893	Dadanco ACB35	1,2,3,4
036-ICU002 047	S206-OFFICE	2X4	4	0.7	20	60	21	28	52	75	1.0	58	3.0	393	1497	2500	3997	4390	0.91	0.5	140	1.0	72	55	-1107	5000	3893	Dadanco ACB40	1,2,3,5
036-ICU002 048	S209-OFFICE	2X4	4	0.7	20	35	21	28	52	75	1.1	58	3.0	229	873	2750	3623	3853	0.94	0.5	140	1.0	72	55	-646	5000	4354	Dadanco ACB40	1,2,3,5
036-ICU002 049	S211-OFFICE	2X4	4	0.7	20	35	21	28	52	75	1.1	58	3.0	229	873	2750	3623	3853	0.94	0.5	140	1.0	72	55	-646	5000	4354	Dadanco ACB40	1,2,3,5
036-ICU002 050	S213-OFFICE	2X4	4	0.7	20	35	21	28	52	75	1.1	58	3.0	229	873	2750	3623	3853	0.94	0.5	140	1.0	72	55	-646	5000	4354	Dadanco ACB40	1,2,3,5
036-ICU002 051	S220-WORKSTATIONS	LINEAR	4	0.7	20	50	21	28	52	75	1.4	58	5.0	327	1248	3500	4748	5075	0.94	0.5	140	1.0	72	55	-922	5000	4078	Dadanco ACB35	1,2,3,4
036-ICU002 052	S220-WORKSTATIONS	LINEAR	4	0.7	20	50	21	28	52	75	1.4	58	5.0	327	1248	3500	4748	5075	0.94	0.5	140	1.0	72	55	-922	5000	4078	Dadanco ACB35	1,2,3,4
036-ICU002 053	S220-WORKSTATIONS	LINEAR	4	0.7	20	50	21	28	52	75	1.4	58	5.0	327	1248	3500	4748	5075	0.94	0.5	140	1.0	72	55	-922	5000	4078	Dadanco ACB35	1,2,3,4
036-ICU002 054	S220-WORKSTATIONS	LINEAR	4	0.7	20	50	21	28	52	75	1.4	58	5.0	327	1248	3500	4748	5075	0.94	0.5	140	1.0	72	55	-922	5000	4078	Dadanco ACB35	1,2,3,4
036-ICU002 055	S220-WORKSTATIONS	LINEAR	4	0.7	20	50	21	28	52	75	1.4	58	5.0	327	1248	3500	4748	5075	0.94	0.5	140	1.0	72	55	-922	5000	4078	Dadanco ACB35	1,2,3,4
036-ICU002 056	S220-WORKSTATIONS	LINEAR	4	0.7	20	50	21	28	52	75	1.4	58	5.0	327	1248	3500	4748	5075	0.94	0.5	140	1.0	72	55	-922	5000	4078	Dadanco ACB35	1,2,3,4
036-ICU002 057	S220-WORKSTATIONS	LINEAR	4	0.7	20	50	21	28	52	75	1.4	58	5.0	327	1248	3500	4748	5075	0.94	0.5	140	1.0	72	55	-922	5000	4078	Dadanco ACB35	1,2,3,4
036-ICU002 058	S220-WORKSTATIONS	LINEAR	4	0.7	20	50	21	28	52	75	1.4	58	5.0	327	1248	3500	4748	5075	0.94	0.5	140	1.0	72	55	-922	5000	4078	Dadanco ACB35	1,2,3,4
036-ICU002 059	S220-WORKSTATIONS	LINEAR	4	0.7	20	50	21	28	52	75	1.4	58	5.0	327	1248	3500	4748	5075	0.94	0.5	140	1.0	72	55	-922	5000	4078	Dadanco ACB35	1,2,3,4
036-ICU002 060	S220-WORKSTATIONS	2X4	4	0.7	20	70	21	28	52	75	2.6	58	8.0	458	1747	6500	8247	8705	0.95	0.5	140	1.0	72	55	-1291	5000	3709	Dadanco ACB40	1,2,3,5
036-ICU002 061	S220-WORKSTATIONS	2X4	4	0.7	20	70	21	28	52	75	2.6	58	8.0	458	1747	6500	8247	8705	0.95	0.5	140	1.0	72	55	-1291	5000	3709	Dadanco ACB40	1,2,3,5
036-ICU002 062	S220-WORKSTATIONS	2X4	4	0.7	20	70	21	28	52	75	2.6	58	8.0	458	1747	6500	8247	8705	0.95	0.5	140	1.0	72	55	-1291	5000	3709	Dadanco ACB40	1,2,3,5
036-ICU002 063	S220-WORKSTATIONS	2X4	4	0.7	20	70	21	28	52	75	2.6	58	8.0	458	1747	6500	8247	8705	0.95	0.5	140	1.0	72	55	-1291	5000	3709	Dadanco ACB40	1,2,3,5
036-ICU002 064	S220-WORKSTATIONS	2X4	4	0.7	20	70	21	28	52	75	2.6	58	8.0	458	1747	6500	8247	8705	0.95	0.5	140	1.0	72	55	-1291	5000	3709	Dadanco ACB40	1,2,3,5
036-ICU002 065	S220-WORKSTATIONS	2X4	4	0.7	20	70	21	28	52	75	2.6	58	8.0	458	1747	6500	8247	8705	0.95	0.5	140	1.0	72	55	-1291	5000	3709	Dadanco ACB40	1,2,3,5
036-ICU002 066	S220-WORKSTATIONS	2X4	4	0.7	20	70	21	28	52	75	2.6	58	8.0	458	1747	6500	8247	8705	0.95	0.5	140	1.0	72	55	-1291	5000	3709	Dadanco ACB40	1,2,3,5
036-ICU002 067	S220-WORKSTATIONS	2X4	4	0.7	20	70	21	28	52	75	2.6	58	8.0	458	1747	6500	8247	8705	0.95	0.5	140	1.0	72	55	-1291	5000	3709	Dadanco ACB40	1,2,3,5
036-ICU002 068	S220-WORKSTATIONS	2X4	4	0.7	20	70	21	28	52	75	2.6	58	8.0	458	1747	6500	8247	8705	0.95	0.5	140	1.0	72	55	-1291	5000	3709	Dadanco ACB40	1,2,3,5
036-ICU002 069	S230A-RECEPTION	LINEAR	4	0.7	20	70	21	28	52	75	1.0	58	5.0	458	1747	2500	4247	4705	0.9	0.5	140	1.0	72	55	-1291	5000	3709	Dadanco ACB35	1,2,3,4
036-ICU002 070	S230A-RECEPTION	2X4	4	0.7	20	90	21	28	52	75	2.1	58	6.0	589	2246	5250	7496	8085	0.93	0.5	140	1.0	72	55	-1660	5000	3340	Dadanco ACB40	1,2,3,5
036-ICU002 071	S230B-OFFICE	LINEAR	4	0.7	20	55	21	28	52	75	1.0	58	5.0	360	1373	2500	3873	4233	0.91	0.5	140	1.0	72	55	-1014	5000	3986	Dadanco ACB35	1,2,3,4
036-ICU002 072	S230B-OFFICE	LINEAR	4	0.7	20	55	21	28	52	75	1.0	58	5.0	360	1373	2500	3873	4233	0.91	0.5	140	1.0	72	55	-1014	5000	3986	Dadanco ACB35	1,2,3,4
036-ICU002 073	S230B-OFFICE	LINEAR	4	0.7	20	55	21	28	52	75	1.0	58	5.0	360	1373	2500	3873	4233	0.91	0.5	140	1.0	72	55	-1014	5000	3986	Dadanco ACB35	1,2,3,4
036-ICU002 074	S230B-OFFICE	2X4	4	0.7	20	55	21	28	52	75	1.6	58	3.0	360	1373	4000	5373	5733	0.94	0.5	140	1.0	72	55	-1014	5000	3986	Dadanco ACB40	1,2,3,5
036-ICU002 075	S230C-OFFICE	LINEAR	4	0.7	20	55	21	28	52	75	1.0	58	5.0	360	1373	2500	3873	4233	0.91	0.5	140	1.0	72	55	-1014	5000	3986	Dadanco ACB35	1,2,3,4
036-ICU002 076	S230C-OFFICE	LINEAR	4	0.7	20	55	21	28	52	75	1.0	58	5.0	360	1373	2500	3873	4233	0.91	0.5	140	1.0	72	55	-1014	5000	3986	Dadanco ACB35	1,2,3,4
036-ICU002 077	S230C-OFFICE	2X4	4	0.7	20	55	21	28	52	75	0.8	58	1.5	360	1373	2000	3373	3733	0.9	0.5	140	1.0	72	55	-1014	5000	3986	Dadanco ACB40	1,2,3,5
036-ICU002 078	S230D-OFFICE	LINEAR	4	0.7	20	55	21	28	52	75	1.0	58	5.0	360	1373	2500	3873	4233	0.91	0.5	140	1.0	72	55	-1014	5000	3986	Dadanco ACB35	1,2,3,4
036-ICU002 079	S230D-OFFICE	LINEAR	4	0.7	20	55	21	28	52	75	1.0	58	5.0	360	1373	2500	3873	4233	0.91	0.5	140	1.0	72	55	-1014	5000	3986	Dadanco ACB35	1,2,3,4
036-ICU002 080	S230D-OFFICE	2X4	4	0.7	20	55	21	28	52	75	0.5	58	1.5	360	1373	1250	2623	2983	0.88	0.5	140	1.0	72	55	-1014	5000	3986	Dadanco ACB40	1,2,3,5
036-ICU002 081	S230E-OFFICE	LINEAR	4	0.7	20	55	21	28	52	75	1.0	58	5.0	360	1373	2500	3873	4233	0.91	0.5	140	1.0	72	55	-1014	5000	3986	Dadanco ACB35	1,2,3,4
036-ICU002 082	S230E-OFFICE	LINEAR	4	0.7	20	55	21	28	52	75	1.0	58	5.0	360	1373	2500	3873	4233	0.91	0.5	140	1.0	72	55	-1014	5000	3986	Dadanco ACB35	1,2,3,4
036-ICU002 083	S230E-OFFICE	2X4	4	0.7	20	55	21	28	52	75	0.5	58	1.5	360	1373	1250	2623	2983	0.88	0.5	140	1.0	72	55	-1014	5000	3986	Dadanco ACB40	1,2,3,5
036-ICU002 084	S230F-OFFICE	LINEAR	4	0.7	20	50	21	28	52	75	1.2	58	5.0	327	1248	3000	4248	4575	0.93	0.5	140	1.0	72	55	-922	5000	4078	Dadanco ACB35	1,2,3,4
036-ICU002 085	S230F-OFFICE	LINEAR	4	0.7	20	50	21	28	52	75	1.2	58	5.0	327	1248	3000	4248	4575	0.93	0.5	140	1.0	72	55	-922	5000	4078	Dadanco ACB35	1,2,3,4
036-ICU002 086	S230F-OFFICE	LINEAR	4	0.7	20	50	21	28	52	75	1.2	58	5.0	327	1248	3000	4248	4575	0.93	0.5	140	1.0	72	55	-922	5000	4078	Dadanco ACB35	1,2,3,4
036-ICU002 087	S230F-OFFICE	2X4	4	0.7	20	90	21	28	52	75	2.4	58	6.0	589	2246	6000	8246	8835	0.93	0.5	140	1.0	72	55	-1660	5000	3340	Dadanco ACB40	1,2,3,5
036-ICU002 088	S230G-SECRETARY	LINEAR	4	0.7	20	70	21	28	52	75	1.0	58	5.0	458	1747	2500	4247	4705	0.9	0.5	140	1.0	72	55	-1291	5000	3709	Dadanco ACB35	1,2,3,4
036-ICU002 089	S230G-SECRETARY	2X4	4	0.7	20	90	21	28	52	75	2.4	58	8.0	589	2246	6000	8246	8835	0.93	0.5	140	1.0	72	55	-1660	5000	3340	Dadanco ACB40	1,2,3,5
036-ICU002 090	S249-OFFICE	2X4	4	0.7	20	40	21	28	52	75	0.5	58	1.5	262	998	1250	2248	2510	0.9	0.5	140	1.0	72	55	-738	5000	4262	Dadanco ACB40	1,2,3,5
036-ICU002 091	S250-WORKSTATIONS	LINEAR	4	0.7	20	50	21	28	52	75	1.3	58	5.0	327	1248	3250	4498	4825	0.93	0.5	140	1.0	72	55	-922	5000	4078	Dadanco ACB35	1,2,3,4
036-ICU002 092	S250-WORKSTATIONS	LINEAR	4	0.7	20	50	21	28	52	75	1.3	58	5.0	327	1248	3250	4498	4825	0.93	0.5	140	1.0	72	55	-922	5000	4078	Dadanco ACB35	1,2,3,4
036-ICU002 093	S250-WORKSTATIONS	LINEAR	4	0.7	20	50	21	28	52	75	1.3	58	5.0	327	1248	3250	4498	4825	0.93	0.5	140	1.0	72	55	-922	5000	4078	Dadanco ACB35	1,2,3,4
036-ICU002 094	S250-WORKSTATIONS	LINEAR	4	0.7	20	50	21	28	52	75	1.3	58	5.0	327	1248	3250	4498	4825	0.93	0.5	140	1.0	72	55	-922	5000	4078	Dadanco ACB35	1,2,3,4
036-ICU002 095	S250-WORKSTATIONS	LINEAR	4	0.7	20	50	21	28	52	75	1.3	58	5.0	327	1248	3250	4498	4825	0.93	0.5	140	1.0	72	55	-922	5000	4078	Dadanco ACB35	1,2,3,4
036-ICU002 096	S250-WORKSTATIONS	LINEAR	4	0.7	20	50	21	28	52	75	1.3	58	5.0	327	1248	3250	4498	4825	0.93	0.5	140	1.0	72	55	-922	5000	4078	Dadanco ACB35	1,2,3,4
036-ICU002 097	S250-WORKSTATIONS	LINEAR	4	0.7	20	50	21	28	52	75	1.3	58	5.0	327	1248	3250	4498	4825	0.93	0.5	140	1.0	72	55	-922	5000	4078	Dadanco ACB35	1,2,3,4
036-ICU002 098	S250-WORKSTATIONS	2X4	4	0.7	20	75	21	28	52	75	2.1	58	6.0	491	1872	5250	7122	7613	0.94	0.5	140	1.0	72	55	-1383	5000	3617	Dadanco ACB40	1,2,3,5
036-ICU002 099	S250-WORKSTATIONS	2X4	4	0.7	20	75	21	28	52	75	2.1	58	6.0	491	1872	5250	7122	7613	0.94	0.5	140	1.0	72	55	-1383	5000	3617	Dadanco ACB40	1,2,3,5
036-ICU002 100	S250-WORKSTATIONS	2X4	4	0.7	20	75	21	28	52	75	2.1	58	6.0	491	1872	5250	7122	7613	0.94	0.5	140	1.0	72	55	-1383	5000	3617	Dadanco ACB40	1,2,3,5
036-ICU002 101	S250-WORKSTATIONS	2X4	4	0.7	20	75	21	28	52	75	2.1	58	6.0	491	1872	5250	7122	7613	0.94	0.5	140	1.0	72	55	-1383	5000	3617	Dadanco ACB40	1,2,3,5
036-ICU002 102	S250-WORKSTATIONS	2X4	4	0.7	20	75	21	28	52	75	2.1	58	6.0	491	1872	5250	7122	7613	0.94	0.5	140	1.0	72	55	-1383	5000	3617	Dadanco ACB40	1,2,3,5
036-ICU002 103	S250-WORKSTATIONS	2X4	4	0.7	20	75	21	28	52	75	2.1	58	6.0	491	1872	5250	7122	7613	0.94	0.5	140	1.0	72	55	-1383	5000	3617	Dadanco ACB40	1,2,3,5
036-ICU002 104	S250-WORKSTATIONS	2X4	4	0.7	20	75	21	28	52	75	2.1	58	6.0	491	1872	5250	7122	7613	0.94	0.5	140	1.0	72	55	-1383	5000	3617	Dadanco ACB40	1,2,3,5
036-ICU002 105	S251-OFFICE	2X4	4	0.7	20	35	21	28	52	75	0.5	58	2.5	229	873	1250	2123	2353	0.9	0.5	140	1.0	72	55	-646	5000	4354	Dadanco ACB40	1,2,3,5
036-ICU002 106	S254-OFFICE	LINEAR	4	0.7	20	55	21	28	52	75	1.0	58	5.0	360	1373	2500	3873	4233	0.91	0.5	140	1.0	72	55	-1014	5000	3986	Dadanco ACB35	1,2,3,4
036-ICU002 107	S254-OFFICE	2X4	4	0.7	20	55	21	28	52	75	1.6	58	3.0	360	1373	4000	5373	5733	0.94	0.5	140	1.0	72	55	-1014	5000	3986	Dadanco ACB40	1,2,3,5
036-ICU002 108	S256-OFFICE	LINEAR	4	0.7	20	55	21	28	52	75	1.0	58	5.0	360	1373	2500	3873	4233	0.91	0.5	140	1.0	72	55	-1014	5000	3986	Dadanco ACB35	1,2,3,4
036-ICU002 109	S256-OFFICE	2X4	4	0.7	20	55	21	28	52	75	1.6	58	3.0	360	1373	4000	5373	5733	0.94	0.5	140	1.0	72	55	-1014	5000	3986	Dadanco ACB40	1,2,3,5
036-ICU002 110	S258-OFFICE	LINEAR	4	0.7	20	55	21	28	52	75	1.0	58	5.0	360	1373	2500	3873	4233	0.91	0.5	140	1.0	72	55	-1014	5000	3986	Dadanco ACB35	1,2,3,4
036-ICU002 111	S258-OFFICE	2X4	4	0.7	20	55	21	28	52	75	1.6	58	3.0	360	1373	4000	5373	5733	0.94	0.5	140	1.0	72	55	-1014	5000	3986	Dadanco ACB40	1,2,3,5
036-ICU002 112	S302-OFFICE	LINEAR	4	0.7	20	60	21	28	52	75	1.1	58	5.0	393	1497	2750	4247	4640	0.92	0.5	140	1.0	72	55	-1107	5000	3893	Dadanco ACB35	1,2,3,4
036-ICU002 113	S302-OFFICE	2X4	4	0.7	20	60	21	28	52	75	0.8	58	3.0	393	1497	2000	3497	3890	0.9	0.5	140	1.0	72	55	-1107	5000	3893	Dadanco ACB40	1,2,3,5
036-ICU002 114	S304-OFFICE	LINEAR	4	0.7	20	60	21	28	52	75	1.1	58	5.0	393	1497	2750	4247	4640	0.92	0.5	140	1.0	72	55	-1107	5000	3893	Dadanco ACB35	1,2,3,4
036-ICU002 115	S304-OFFICE	2X4	4	0.7	20	60	21	28	52	75	0.8	58	3.0	393	1497	2000	3497	3890	0.9	0.5	140	1.0	72	55	-1107	5000	3893	Dadanco ACB40	1,2,3,5
036-ICU002 116	S306-OFFICE	LINEAR	4	0.7	20	60	21	28	52	75	1.1	58	5.0	393	1497	2750	4247	4640	0.92	0.5	140	1.0	72	55	-1107	5000	3893	Dadanco ACB35	1,2,3,4
036-ICU002 117	S306-OFFICE	2X4	4	0.7	20	60	21	28	52	75	0.8	58	3.0	393	1497	2000	3497	3890	0.9	0.5	140	1.0	72	55	-1107	5000	3893	Dadanco ACB40	1,2,3,5
036-ICU002 118	S309-OFFICE	2X4	4	0.7	20	35	21	28	52	75	0.5	58	1.5	229	873	1250	2123	2353	0.9	0.5	140	1.0	72	55	-646	5000	4354	Dadanco ACB40	1,2,3,5
036-ICU002 119	S311-OFFICE	2X4	4	0.7	20	35	21	28	52	75	0.5	58	1.5	229	873	1250	2123	2353	0.9	0.5	140	1.0	72	55	-646	5000	4354	Dadanco ACB40	1,2,3,5
036-ICU002 120	S313-OFFICE	2X4	4	0.7	20	35	21	28	52	75	0.5	58	1.5	229	873	1250	2123	2353	0.9	0.5	140	1.0	72	55	-646	5000	4354	Dadanco ACB40	1,2,3,5
036-ICU002 121	S349-OFFICE	2X4	4	0.7	20	35	21	28	52	75	0.5	58	1.5	229	873	1250	2123	2353	0.9	0.5	140	1.0	72	55	-646	5000	4354	Dadanco ACB40	1,2,3,5
036-ICU002 122	S351-OFFICE	2X4	4	0.7	20	35	21	28	52	75	0.5	58	1.5	229	873	1250	2123	2353	0.9	0.5	140	1.0	72	55	-646	5000	4354	Dadanco ACB40	1,2,3,5
036-ICU002 123	S320-WORKSTATIONS	LINEAR	4	0.7	20	50	21	28	52	75	1.3	58	5.0	327	1248	3250	4498	4825	0.93	0.5	140	1.0	72	55	-922	5000	4078	Dadanco ACB35	1,2,3,4
036-ICU002 124	S320-WORKSTATIONS	LINEAR	4	0.7	20	50	21	28	52	75	1.3	58	5.0	327	1248	3250	4498	4825	0.93	0.5	140	1.0	72	55	-922	5000	4078	Dadanco ACB35	1,2,3,4
036-ICU002 125	S320-WORKSTATIONS	LINEAR	4	0.7	20	50	21	28	52	75	1.3	58	5.0	327	1248	3250	4498	4825	0.93	0.5	140	1.0	72	55	-922	5000	4078	Dadanco ACB35	1,2,3,4
036-ICU002 126	S320-WORKSTATIONS	LINEAR	4	0.7	20	50	21	28	52	75	1.3	58	5.0	327	1248	3250	4498	4825	0.93	0.5	140	1.0	72	55	-922	5000	4078	Dadanco ACB35	1,2,3,4
036-ICU002 127	S320-WORKSTATIONS	LINEAR	4	0.7	20	50	21	28	52	75	1.3	58	5.0	327	1248	3250	4498	4825	0.93	0.5	140	1.0	72	55	-922	5000	4078	Dadanco ACB35	1,2,3,4
036-ICU002 128	S320-WORKSTATIONS	LINEAR	4	0.7	20	50	21	28	52	75	1.3	58	5.0	327	1248	3250	4498	4825	0.93	0.5	140	1.0	72	55	-922	5000	4078	Dadanco ACB35	1,2,3,4
036-ICU002 129	S320-WORKSTATIONS	LINEAR	4	0.7	20	50	21	28	52	75	1.3	58	5.0	327	1248	3250	4498	4825	0.93	0.5	140	1.0	72	55	-922	5000	4078	Dadanco ACB35	1,2,3,4
036-ICU002 130	S320-WORKSTATIONS	LINEAR	4	0.7	20	50	21	28	52	75	1.3	58	5.0	327	1248	3250	4498	4825	0.93	0.5	140	1.0	72	55	-922	5000	4078	Dadanco ACB35	1,2,3,4
036-ICU002 131	S320-WORKSTATIONS	LINEAR	4	0.7	20	50	21	28	52	75	1.3	58	5.0	327	1248	3250	4498	4825	0.93	0.5	140	1.0	72	55	-922	5000	4078	Dadanco ACB35	1,2,3,4
036-ICU002 132	S320-WORKSTATIONS	2X4	4	0.7	20	75	21	28	52	75	2.1	58	8.0	491	1872	5250	7122	7613	0.94	0.5	140	1.0	72	55	-1383	5000	3617	Dadanco ACB40	1,2,3,5
036-ICU002 133	S320-WORKSTATIONS	2X4	4	0.7	20	75	21	28	52	75	2.1	58	8.0	491	1872	5250	7122	7613	0.94	0.5	140	1.0	72	55	-1383	5000	3617	Dadanco ACB40	1,2,3,5
036-ICU002 134	S320-WORKSTATIONS	2X4	4	0.7	20	75	21	28	52	75	2.1	58	8.0	491	1872	5250	7122	7613	0.94	0.5	140	1.0	72	55	-1383	5000	3617	Dadanco ACB40	1,2,3,5
036-ICU002 135	S320-WORKSTATIONS	2X4	4	0.7	20	75	21	28	52	75	2.1	58	8.0	491	1872	5250	7122	7613	0.94	0.5	140	1.0	72	55	-1383	5000	3617	Dadanco ACB40	1,2,3,5
036-ICU002 136	S320-WORKSTATIONS	2X4	4	0.7	20	75	21	28	52	75	2.1	58	8.0	491	1872	5250	7122	7613	0.94	0.5	140	1.0	72	55	-1383	5000	3617	Dadanco ACB40	1,2,3,5
036-ICU002 137	S320-WORKSTATIONS	2X4	4	0.7	20	75	21	28	52	75	2.1	58	8.0	491	1872	5250	7122	7613	0.94	0.5	140	1.0	72	55	-1383	5000	3617	Dadanco ACB40	1,2,3,5
036-ICU002 138	S320-WORKSTATIONS	2X4	4	0.7	20	75	21	28	52	75	2.1	58	8.0	491	1872	5250	7122	7613	0.94	0.5	140	1.0	72	55	-1383	5000	3617	Dadanco ACB40	1,2,3,5
036-ICU002 139	S320-WORKSTATIONS	2X4	4	0.7	20	75	21	28	52	75	2.1	58	8.0	491	1872	5250	7122	7613	0.94	0.5	140	1.0	72	55	-1383	5000	3617	Dadanco ACB40	1,2,3,5
036-ICU002 140	S320-WORKSTATIONS	2X4	4	0.7	20	75	21	28	52	75	2.1	58	8.0	491	1872	5250	7122	7613	0.94	0.5	140	1.0	72	55	-1383	5000	3617	Dadanco ACB40	1,2,3,5
036-ICU002 141	S330A-RECEPTION	LINEAR	4	0.7	20	70	21	28	52	75	1.1	58	5.0	458	1747	2750	4497	4955	0.91	0.5	140	1.0	72	55	-1291	5000	3709	Dadanco ACB35	1,2,3,4
036-ICU002 142	S330A-RECEPTION	2X4	4	0.7	20	90	21	28	52	75	2.6	58	8.0	589	2246	6500	8746	9335	0.94	0.5	140	1.0	72	55	-1660	5000	3340	Dadanco ACB40	1,2,3,5
036-ICU002 143	S330B-OFFICE	LINEAR	4	0.7	20	55	21	28	52	75	1.0	58	5.0	360	1373	2500	3873	4233	0.91	0.5	140	1.0	72	55	-1014	5000	3986	Dadanco ACB35	1,2,3,4
036-ICU002 144	S330B-OFFICE	LINEAR	4	0.7	20	55	21	28	52	75	1.0	58	5.0	360	1373	2500	3873	4233	0.91	0.5	140	1.0	72	55	-1014	5000	3986	Dadanco ACB35	1,2,3,4
036-ICU002 145	S330B-OFFICE	LINEAR	4	0.7	20	55	21	28	52	75	1.0	58	5.0	360	1373	2500	3873	4233	0.91	0.5	140	1.0	72	55	-1014	5000	3986	Dadanco ACB35	1,2,3,4
036-ICU002 146	S330B-OFFICE	2X4	4	0.7	20	55	21	28	52	75	1.6	58	3.0	360	1373	4000	5373	5733	0.94	0.5	140	1.0	72	55	-1014	5000	3986	Dadanco ACB40	1,2,3,5
036-ICU002 147	S330C-OFFICE	LINEAR	4	0.7	20	55	21	28	52	75	1.0	58	5.0	360	1373	2500	3873	4233	0.91	0.5	140	1.0	72	55	-1014	5000	3986	Dadanco ACB35	1,2,3,4
036-ICU002 148	S330C-OFFICE	LINEAR	4	0.7	20	55	21	28	52	75	1.0	58	5.0	360	1373	2500	3873	4233	0.91	0.5	140	1.0	72	55	-1014	5000	3986	Dadanco ACB35	1,2,3,4

NOTES:

1 UNIT SHALL BE 4FT LENGTH
2 UNIT SHALL HAVE THE PERFORATED RETURN GRILLE. COLOR TO BE SELECTED BY THE ARCHITECT
3 UNIT SHALL BE PROVIDED WITH COOLING COIL AND HEATING COIL
4 THE LINEAR BEAM SHALL BE PROVIDED WITH SUPPLY AND RETURN GRILLE, 1-WAY DISCHARGE AND ADJUSTABLE DIRECTION. INTERGRAL DRAIN PAN IS REQUIRED.
5 THE 2X4 BEAM SHALL BE 2-WAY DISCHARGE

100% SUBMITTAL

AECOM

AECOM TECHNICAL SERVICES, INC.
3101 WILSON BOULEVARD
SUITE 900
ARLINGTON, VA 22201

T: 703-682-4900 F: 703.682.4901
www.aecom.com

SEAL AREA

STATE OF MARYLAND
PAUL ANDREW SABATUK
No. 13275
REGISTERED PROFESSIONAL ENGINEER

KEY PLAN

REV	DATE	DESCRIPTION	S&R BR.	CUSTOMER	PM	SECT. HEAD

	INITIALS	DATE
DRAWN BY	Designer	
CHECKED BY	PS	
A-E MANAGER	EW	
ENVIRONMENTAL BRANCH	JH	
SAFETY BRANCH	CS	
CM	MMD	
PM	RWP	
CUSTOMER	JWB	
ENG. BRANCH	DGL	

MECHANICAL SCHEDULES

M-005

FLIGHT PROJECTS BUILDING

NATIONAL AERONAUTICS AND SPACE ADMINISTRATION

GODDARD SPACE FLIGHT CENTER GREENBELT, MARYLAND
FACILITIES MANAGEMENT DIVISION

DATE ISSUED	CoF CODE OR WR#	AECOM PROJECT NO.	SCALE
10/12/2012	12GXAZ	60187636	1/8" = 1'-0"

FILE DATE: 10/24/2012 10:27:56 AM

ACTIVE CHILLED BEAM SCHEDULES

ITEM TAG	ROOM SERVED	TYPE	UNIT LENGTH (FT)	AIR PRESS (in)	NC LEVEL	PRIMARY AIR FLOW (CFM)	PRIMARY AIR ENTHALPY (BTU/lb)	PRIMARY AIR DESIGN ENTHALPY (Btu/lb)	PRIMARY AIR EAT (F)	PRIMARY AIR DESIGN TEMP (F)	CHILLED WATER FLOW (GPM)	CHILLED WATER EWT (F)	CHILLED WATER PRESSURE DROP (FT)	COOLING CAPACITY AIR LATENT (BTU)	COOLING CAPACITY AIR SENSIBLE (BTU)	COOLING CAPACITY WATER SENSIBLE (BTU)	COOLING CAPACITY TOTAL SENSIBLE (BTU)	COOLING CAPACITY TOTAL (BTU)	COOLING CAPACITY SHR	HEATING WATER FLOW (GPM)	HEATING WATER EWT (F)	HEATING WATER PRESSURE DROP (FT)	HEATING CAPACITY DESIGN TEMP (F)	HEATING CAPACITY PRIMARY TEMP (F)	HEATING CAPACITY AIR SENSIBLE (BTU)	HEATING CAPACITY WATER SENSIBLE (BTU)	HEATING CAPACITY NET SENSIBLE (BTU)	BASIS OF DESIGN	GENERAL NOTES
036-ICU002 149	S330C-OFFICE	2X4	4	0.7	20	55	21	28	52	75	0.8	58	1.5	360	1373	2000	3373	3733	0.9	0.5	140	1.0	72	55	-1014	5000	3986	Dadanco ACB40	1,2,3,5
036-ICU002 150	S330D-OFFICE	LINEAR	4	0.7	20	55	21	28	52	75	1.0	58	5.0	360	1373	2500	3873	4233	0.91	0.5	140	1.0	72	55	-1014	5000	3986	Dadanco ACB35	1,2,3,4
036-ICU002 151	S330D-OFFICE	LINEAR	4	0.7	20	55	21	28	52	75	1.0	58	5.0	360	1373	2500	3873	4233	0.91	0.5	140	1.0	72	55	-1014	5000	3986	Dadanco ACB35	1,2,3,4
036-ICU002 152	S330D-OFFICE	2X4	4	0.7	20	55	21	28	52	75	0.8	58	1.5	360	1373	2000	3373	3733	0.9	0.5	140	1.0	72	55	-1014	5000	3986	Dadanco ACB40	1,2,3,5
036-ICU002 153	S330E-OFFICE	LINEAR	4	0.7	20	55	21	28	52	75	1.0	58	5.0	360	1373	2500	3873	4233	0.91	0.5	140	1.0	72	55	-1014	5000	3986	Dadanco ACB35	1,2,3,4
036-ICU002 154	S330E-OFFICE	LINEAR	4	0.7	20	55	21	28	52	75	1.0	58	5.0	360	1373	2500	3873	4233	0.91	0.5	140	1.0	72	55	-1014	5000	3986	Dadanco ACB35	1,2,3,4
036-ICU002 155	S330E-OFFICE	2X4	4	0.7	20	55	21	28	52	75	0.8	58	1.5	360	1373	2000	3373	3733	0.9	0.5	140	1.0	72	55	-1014	5000	3986	Dadanco ACB40	1,2,3,5
036-ICU002 156	S330F-OFFICE	LINEAR	4	0.7	20	55	21	28	52	75	1.3	58	5.0	360	1373	3250	4623	4983	0.93	0.5	140	1.0	72	55	-1014	5000	3986	Dadanco ACB35	1,2,3,4
036-ICU002 157	S330F-OFFICE	LINEAR	4	0.7	20	55	21	28	52	75	1.3	58	5.0	360	1373	3250	4623	4983	0.93	0.5	140	1.0	72	55	-1014	5000	3986	Dadanco ACB35	1,2,3,4
036-ICU002 158	S330F-OFFICE	LINEAR	4	0.7	20	55	21	28	52	75	1.3	58	5.0	360	1373	3250	4623	4983	0.93	0.5	140	1.0	72	55	-1014	5000	3986	Dadanco ACB35	1,2,3,4
036-ICU002 159	S330F-OFFICE	LINEAR	4	0.7	20	55	21	28	52	75	1.3	58	5.0	360	1373	3250	4623	4983	0.93	0.5	140	1.0	72	55	-1014	5000	3986	Dadanco ACB35	1,2,3,4
036-ICU002 160	S330G-SECRETARY	LINEAR	4	0.7	20	60	21	28	52	75	1.3	58	5.0	393	1497	3250	4747	5140	0.92	0.5	140	1.0	72	55	-1107	5000	3893	Dadanco ACB35	1,2,3,4
036-ICU002 161	S330G-SECRETARY	2X4	4	0.7	20	85	21	28	52	75	2.4	58	8.0	556	2121	6000	8121	8678	0.94	0.5	140	1.0	72	55	-1568	5000	3432	Dadanco ACB40	1,2,3,5
036-ICU002 162	S350-WORKSTATIONS	LINEAR	4	0.7	20	60	21	28	52	75	1.1	58	5.0	393	1497	2750	4247	4640	0.92	0.5	140	1.0	72	55	-1107	5000	3893	Dadanco ACB35	1,2,3,4
036-ICU002 163	S350-WORKSTATIONS	LINEAR	4	0.7	20	60	21	28	52	75	1.1	58	5.0	393	1497	2750	4247	4640	0.92	0.5	140	1.0	72	55	-1107	5000	3893	Dadanco ACB35	1,2,3,4
036-ICU002 164	S350-WORKSTATIONS	LINEAR	4	0.7	20	60	21	28	52	75	1.1	58	5.0	393	1497	2750	4247	4640	0.92	0.5	140	1.0	72	55	-1107	5000	3893	Dadanco ACB35	1,2,3,4
036-ICU002 165	S350-WORKSTATIONS	LINEAR	4	0.7	20	60	21	28	52	75	1.1	58	5.0	393	1497	2750	4247	4640	0.92	0.5	140	1.0	72	55	-1107	5000	3893	Dadanco ACB35	1,2,3,4
036-ICU002 166	S350-WORKSTATIONS	LINEAR	4	0.7	20	60	21	28	52	75	1.1	58	5.0	393	1497	2750	4247	4640	0.92	0.5	140	1.0	72	55	-1107	5000	3893	Dadanco ACB35	1,2,3,4
036-ICU002 167	S350-WORKSTATIONS	LINEAR	4	0.7	20	60	21	28	52	75	1.1	58	5.0	393	1497	2750	4247	4640	0.92	0.5	140	1.0	72	55	-1107	5000	3893	Dadanco ACB35	1,2,3,4
036-ICU002 168	S350-WORKSTATIONS	LINEAR	4	0.7	20	60	21	28	52	75	1.1	58	5.0	393	1497	2750	4247	4640	0.92	0.5	140	1.0	72	55	-1107	5000	3893	Dadanco ACB35	1,2,3,4
036-ICU002 169	S350-WORKSTATIONS	2X4	4	0.7	20	65	21	28	52	75	2.1	58	8.0	425	1622	5250	6872	7298	0.94	0.5	140	1.0	72	55	-1199	5000	3801	Dadanco ACB40	1,2,3,5
036-ICU002 170	S350-WORKSTATIONS	2X4	4	0.7	20	65	21	28	52	75	2.1	58	8.0	425	1622	5250	6872	7298	0.94	0.5	140	1.0	72	55	-1199	5000	3801	Dadanco ACB40	1,2,3,5
036-ICU002 171	S350-WORKSTATIONS	2X4	4	0.7	20	65	21	28	52	75	2.1	58	8.0	425	1622	5250	6872	7298	0.94	0.5	140	1.0	72	55	-1199	5000	3801	Dadanco ACB40	1,2,3,5
036-ICU002 172	S350-WORKSTATIONS	2X4	4	0.7	20	65	21	28	52	75	2.1	58	8.0	425	1622	5250	6872	7298	0.94	0.5	140	1.0	72	55	-1199	5000	3801	Dadanco ACB40	1,2,3,5
036-ICU002 173	S350-WORKSTATIONS	2X4	4	0.7	20	65	21	28	52	75	2.1	58	8.0	425	1622	5250	6872	7298	0.94	0.5	140	1.0	72	55	-1199	5000	3801	Dadanco ACB40	1,2,3,5
036-ICU002 174	S350-WORKSTATIONS	2X4	4	0.7	20	65	21	28	52	75	2.1	58	8.0	425	1622	5250	6872	7298	0.94	0.5	140	1.0	72	55	-1199	5000	3801	Dadanco ACB40	1,2,3,5
036-ICU002 175	S350-WORKSTATIONS	2X4	4	0.7	20	65	21	28	52	75	2.1	58	8.0	425	1622	5250	6872	7298	0.94	0.5	140	1.0	72	55	-1199	5000	3801	Dadanco ACB40	1,2,3,5
036-ICU002 176	S354-OFFICE	LINEAR	4	0.7	20	55	21	28	52	75	1.0	58	5.0	360	1373	2500	3873	4233	0.91	0.5	140	1.0	72	55	-1014	5000	3986	Dadanco ACB35	1,2,3,4
036-ICU002 177	S354-OFFICE	2X4	4	0.7	20	55	21	28	52	75	1.6	58	3.0	360	1373	4000	5373	5733	0.94	0.5	140	1.0	72	55	-1014	5000	3986	Dadanco ACB40	1,2,3,5
036-ICU002 178	S356-OFFICE	LINEAR	4	0.7	20	55	21	28	52	75	1.0	58	5.0	360	1373	2500	3873	4233	0.91	0.5	140	1.0	72	55	-1014	5000	3986	Dadanco ACB35	1,2,3,4
036-ICU002 179	S356-OFFICE	2X4	4	0.7	20	55	21	28	52	75	1.6	58	3.0	360	1373	4000	5373	5733	0.94	0.5	140	1.0	72	55	-1014	5000	3986	Dadanco ACB40	1,2,3,5
036-ICU002 180	S358-OFFICE	LINEAR	4	0.7	20	55	21	28	52	75	1.0	58	5.0	360	1373	2500	3873	4233	0.91	0.5	140	1.0	72	55	-1014	5000	3986	Dadanco ACB35	1,2,3,4
036-ICU002 181	S358-OFFICE	2X4	4	0.7	20	55	21	28	52	75	1.6	58	3.0	360	1373	4000	5373	5733	0.94	0.5	140	1.0	72	55	-1014	5000	3986	Dadanco ACB40	1,2,3,5
036-ICU002 182	S402-OFFICE	LINEAR	4	0.7	20	55	21	28	52	75	1.1	58	5.0	360	1373	2750	4123	4483	0.92	0.5	140	1.0	72	55	-1014	5000	3986	Dadanco ACB35	1,2,3,4
036-ICU002 183	S402-OFFICE	2X4	4	0.7	20	55	21	28	52	75	2.1	58	8.0	360	1373	5250	6623	6983	0.95	0.5	140	1.0	72	55	-1014	5000	3986	Dadanco ACB40	1,2,3,5
036-ICU002 184	S409-OFFICE	2X4	4	0.7	20	35	21	28	52	75	0.5	58	1.5	229	873	1250	2123	2353	0.9	0.5	140	1.0	72	55	-646	5000	4354	Dadanco ACB40	1,2,3,5
036-ICU002 185	S411-OFFICE	2X4	4	0.7	20	35	21	28	52	75	0.5	58	1.5	229	873	1250	2123	2353	0.9	0.5	140	1.0	72	55	-646	5000	4354	Dadanco ACB40	1,2,3,5
036-ICU002 186	S413-OFFICE	2X4	4	0.7	20	35	21	28	52	75	0.8	58	1.5	229	873	2000	2873	3103	0.93	0.5	140	1.0	72	55	-646	5000	4354	Dadanco ACB40	1,2,3,5
036-ICU002 187	S420-WORKSTATIONS	LINEAR	4	0.7	20	50	21	28	52	75	1.3	58	5.0	327	1248	3250	4498	4825	0.93	0.5	140	1.0	72	55	-922	5000	4078	Dadanco ACB35	1,2,3,4
036-ICU002 188	S420-WORKSTATIONS	LINEAR	4	0.7	20	50	21	28	52	75	1.3	58	5.0	327	1248	3250	4498	4825	0.93	0.5	140	1.0	72	55	-922	5000	4078	Dadanco ACB35	1,2,3,4
036-ICU002 189	S420-WORKSTATIONS	LINEAR	4	0.7	20	50	21	28	52	75	1.3	58	5.0	327	1248	3250	4498	4825	0.93	0.5	140	1.0	72	55	-922	5000	4078	Dadanco ACB35	1,2,3,4
036-ICU002 190	S420-WORKSTATIONS	LINEAR	4	0.7	20	50	21	28	52	75	1.3	58	5.0	327	1248	3250	4498	4825	0.93	0.5	140	1.0	72	55	-922	5000	4078	Dadanco ACB35	1,2,3,4
036-ICU002 191	S420-WORKSTATIONS	LINEAR	4	0.7	20	50	21	28	52	75	1.3	58	5.0	327	1248	3250	4498	4825	0.93	0.5	140	1.0	72	55	-922	5000	4078	Dadanco ACB35	1,2,3,4
036-ICU002 192	S420-WORKSTATIONS	LINEAR	4	0.7	20	50	21	28	52	75	1.3	58	5.0	327	1248	3250	4498	4825	0.93	0.5	140	1.0	72	55	-922	5000	4078	Dadanco ACB35	1,2,3,4
036-ICU002 193	S420-WORKSTATIONS	LINEAR	4	0.7	20	50	21	28	52	75	1.3	58	5.0	327	1248	3250	4498	4825	0.93	0.5	140	1.0	72	55	-922	5000	4078	Dadanco ACB35	1,2,3,4
036-ICU002 194	S420-WORKSTATIONS	LINEAR	4	0.7	20	50	21	28	52	75	1.3	58	5.0	327	1248	3250	4498	4825	0.93	0.5	140	1.0	72	55	-922	5000	4078	Dadanco ACB35	1,2,3,4
036-ICU002 195	S420-WORKSTATIONS	LINEAR	4	0.7	20	50	21	28	52	75	1.3	58	5.0	327	1248	3250	4498	4825	0.93	0.5	140	1.0	72	55	-922	5000	4078	Dadanco ACB35	1,2,3,4
036-ICU002 196	S420-WORKSTATIONS	LINEAR	4	0.7	20	50	21	28	52	75	1.3	58	5.0	327	1248	3250	4498	4825	0.93	0.5	140	1.0	72	55	-922	5000	4078	Dadanco ACB35	1,2,3,4
036-ICU002 197	S420-WORKSTATIONS	LINEAR	4	0.7	20	50	21	28	52	75	1.3	58	5.0	327	1248	3250	4498	4825	0.93	0.5	140	1.0	72	55	-922	5000	4078	Dadanco ACB35	1,2,3,4
036-ICU002 198	S420-WORKSTATIONS	2X4	4	0.7	20	75	21	28	52	75	2.1	58	8.0	491	1872	5250	7122	7613	0.94	0.5	140	1.0	72	55	-1383	5000	3617	Dadanco ACB40	1,2,3,5
036-ICU002 199	S420-WORKSTATIONS	2X4	4	0.7	20	75	21	28	52	75	2.1	58	8.0	491	1872	5250	7122	7613	0.94	0.5	140	1.0	72	55	-1383	5000	3617	Dadanco ACB40	1,2,3,5
036-ICU002 200	S420-WORKSTATIONS	2X4	4	0.7	20	75	21	28	52	75	2.1	58	8.0	491	1872	5250	7122	7613	0.94	0.5	140	1.0	72	55	-1383	5000	3617	Dadanco ACB40	1,2,3,5
036-ICU002 201	S420-WORKSTATIONS	2X4	4	0.7	20	75	21	28	52	75	2.1	58	8.0	491	1872	5250	7122	7613	0.94	0.5	140	1.0	72	55	-1383	5000	3617	Dadanco ACB40	1,2,3,5
036-ICU002 202	S420-WORKSTATIONS	2X4	4	0.7	20	75	21	28	52	75	2.1	58	8.0	491	1872	5250	7122	7613	0.94	0.5	140	1.0	72	55	-1383	5000	3617	Dadanco ACB40	1,2,3,5
036-ICU002 203	S420-WORKSTATIONS	2X4	4	0.7	20	75	21	28	52	75	2.1	58	8.0	491	1872	5250	7122	7613	0.94	0.5	140	1.0	72	55	-1383	5000	3617	Dadanco ACB40	1,2,3,5
036-ICU002 204	S420-WORKSTATIONS	2X4	4	0.7	20	75	21	28	52	75	2.1	58	8.0	491	1872	5250	7122	7613	0.94	0.5	140	1.0	72	55	-1383	5000	3617	Dadanco ACB40	1,2,3,5
036-ICU002 205	S420-WORKSTATIONS	2X4	4	0.7	20	75	21	28	52	75	2.1	58	8.0	491	1872	5250	7122	7613	0.94	0.5	140	1.0	72	55	-1383	5000	3617	Dadanco ACB40	1,2,3,5
036-ICU002 206	S420-WORKSTATIONS	2X4	4	0.7	20	75	21	28	52	75	2.1	58	8.0	491	1872	5250	7122	7613	0.94	0.5	140	1.0	72	55	-1383	5000	3617	Dadanco ACB40	1,2,3,5
036-ICU002 207	S420-WORKSTATIONS	2X4	4	0.7	20	75	21	28	52	75	2.1	58	8.0	491	1872	5250	7122	7613	0.94	0.5	140	1.0	72	55	-1383	5000	3617	Dadanco ACB40	1,2,3,5
036-ICU002 208	S420-WORKSTATIONS	2X4	4	0.7	20	75	21	28	52	75	2.1	58	8.0	491	1872	5250	7122	7613	0.94	0.5	140	1.0	72	55	-1383	5000	3617	Dadanco ACB40	1,2,3,5
036-ICU002 209	S430A-RECEPTION	LINEAR	4	0.7	20	50	21	28	52	75	1.3	58	5.0	327	1248	3250	4498	4825	0.93	0.5	140	1.0	72	55	-922	5000	4078	Dadanco ACB35	1,2,3,4
036-ICU002 210	S430A-RECEPTION	2X4	4	0.7	20	50	21	28	52	75	2.4	58	8.0	327	1248	6000	7248	7575	0.96	0.5	140	1.0	72	55	-922	5000	4078	Dadanco ACB40	1,2,3,5
036-ICU002 211	S430B-OFFICE	LINEAR	4	0.7	20	50	21	28	52	75	1.4	58	5.0	327	1248	3500	4748	5075	0.94	0.5	140	1.0	72	55	-922	5000	4078	Dadanco ACB35	1,2,3,4
036-ICU002 212	S430B-OFFICE	LINEAR	4	0.7	20	45	21	28	52	75	1.4	58	5.0	295	1123	3500	4623	4918	0.94	0.5	140	1.0	72	55	-830	5000	4170	Dadanco ACB35	1,2,3,4
036-ICU002 213	S430B-OFFICE	LINEAR	4	0.7	20	45	21	28	52	75	1.4	58	5.0	295	1123	3500	4623	4918	0.94	0.5	140	1.0	72	55	-830	5000	4170	Dadanco ACB35	1,2,3,4
036-ICU002 214	S430B-OFFICE	LINEAR	4	0.7	20	45	21	28	52	75	1.4	58	5.0	295	1123	3500	4623	4918	0.94	0.5	140	1.0	72	55	-830	5000	4170	Dadanco ACB35	1,2,3,4
036-ICU002 215	S430C-OFFICE	LINEAR	4	0.7	20	55	21	28	52	75	0.8	58	5.0	360	1373	2000	3373	3733	0.9	0.5	140	1.0	72	55	-1014	5000	3986	Dadanco ACB35	1,2,3,4
036-ICU002 216	S430C-OFFICE	LINEAR	4	0.7	20	55	21	28	52	75	0.8	58	5.0	360	1373	2000	3373	3733	0.9	0.5	140	1.0	72	55	-1014	5000	3986	Dadanco ACB35	1,2,3,4
036-ICU002 217	S430C-OFFICE	2X4	4	0.7	20	55	21	28	52	75	2.2	58	8.0	360	1373	5500	6873	7233	0.95	0.5	140	1.0	72	55	-1014	5000	3986	Dadanco ACB40	1,2,3,5
036-ICU002 218	S430D-OFFICE	LINEAR	4	0.7	20	55	21	28	52	75	0.8	58	5.0	360	1373	2000	3373	3733	0.9	0.5	140	1.0	72	55	-1014	5000	3986	Dadanco ACB35	1,2,3,4
036-ICU002 219	S430D-OFFICE	LINEAR	4	0.7	20	55	21	28	52	75	0.8	58	5.0	360	1373	2000	3373	3733	0.9	0.5	140	1.0	72	55	-1014	5000	3986	Dadanco ACB35	1,2,3,4
036-ICU002 220	S430D-OFFICE	2X4	4	0.7	20	55	21	28	52	75	1.0	58	3.0	360	1373	2500	3873	4233	0.91	0.5	140	1.0	72	55	-1014	5000	3986	Dadanco ACB40	1,2,3,5
036-ICU002 221	S430E-OFFICE	LINEAR	4	0.7	20	55	21	28	52	75	0.8	58	5.0	360	1373	2000	3373	3733	0.9	0.5	140	1.0	72	55	-1014	5000	3986	Dadanco ACB35	1,2,3,4
036-ICU002 222	S430E-OFFICE	LINEAR	4	0.7	20	55	21	28	52	75	0.8	58	5.0	360	1373	2000	3373	3733	0.9	0.5	140	1.0	72	55	-1014	5000	3986	Dadanco ACB35	1,2,3,4
036-ICU002 223	S430E-OFFICE	2X4	4	0.7	20	55	21	28	52	75	1.0	58	3.0	360	1373	2500	3873	4233	0.91	0.5	140	1.0	72	55	-1014	5000	3986	Dadanco ACB40	1,2,3,5
036-ICU002 224	S430F-OFFICE	LINEAR	4	0.7	20	55	21	28	52	75	1.3	58	5.0	360	1373	3250	4623	4983	0.93	0.5	140	1.0	72	55	-1014	5000	3986	Dadanco ACB35	1,2,3,4
036-ICU002 225	S430F-OFFICE	LINEAR	4	0.7	20	55	21	28	52	75	1.3	58	5.0	360	1373	3250	4623	4983	0.93	0.5	140	1.0	72	55	-1014	5000	3986	Dadanco ACB35	1,2,3,4
036-ICU002 226	S430F-OFFICE	LINEAR	4	0.7	20	55	21	28	52	75	1.3	58	5.0	360	1373	3250	4623	4983	0.93	0.5	140	1.0	72	55	-1014	5000	3986	Dadanco ACB35	1,2,3,4
036-ICU002 227	S430F-OFFICE	LINEAR	4	0.7	20	55	21	28	52	75	1.3	58	5.0	360	1373	3250	4623	4983	0.93	0.5	140	1.0	72	55	-1014	5000	3986	Dadanco ACB35	1,2,3,4
036-ICU002 228	S430G-SECRETARY	LINEAR	4	0.7	20	50	21	28	52	75	1.3	58	5.0	327	1248	3250	4498	4825	0.93	0.5	140	1.0	72	55	-922	5000	4078	Dadanco ACB35	1,2,3,4
036-ICU002 229	S430G-SECRETARY	2X4	4	0.7	20	90	21	28	52	75	2.1	58	8.0	589	2246	5250	7496	8085	0.93	0.5	140	1.0	72	55	-1660	5000	3340	Dadanco ACB40	1,2,3,5
036-ICU002 230	S449-OFFICE	2X4	4	0.7	20	35	21	28	52	75	0.5	58	1.5	229	873	1250	2123	2353	0.9	0.5	140	1.0	72	55	-646	5000	4354	Dadanco ACB40	1,2,3,5
036-ICU002 231	S451-OFFICE	2X4	4	0.7	20	35	21	28	52	75	0.5	58	1.5	229	873	1250	2123	2353	0.9	0.5	140	1.0	72	55	-646	5000	4354	Dadanco ACB40	1,2,3,5
036-ICU002 232	S450-WORKSTATIONS	LINEAR	4	0.7	20	60	21	28	52	75	1.1	58	5.0	393	1497	2750	4247	4640	0.92	0.5	140	1.0	72	55	-1107	5000	3893	Dadanco ACB35	1,2,3,4
036-ICU002 233	S450-WORKSTATIONS	LINEAR	4	0.7	20	60	21	28	52	75	1.1	58	5.0	393	1497	2750	4247	4640	0.92	0.5	140	1.0	72	55	-1107	5000	3893	Dadanco ACB35	1,2,3,4
036-ICU002 234	S450-WORKSTATIONS	LINEAR	4	0.7	20	60	21	28	52	75	1.1	58	5.0	393	1497	2750	4247	4640	0.92	0.5	140	1.0	72	55	-1107	5000	3893	Dadanco ACB35	1,2,3,4
036-ICU002 235	S450-WORKSTATIONS	LINEAR	4	0.7	20	60	21	28	52	75	1.1	58	5.0	393	1497	2750	4247	4640	0.92	0.5	140	1.0	72	55	-1107	5000	3893	Dadanco ACB35	1,2,3,4
036-ICU002 236	S450-WORKSTATIONS	LINEAR	4	0.7	20	60	21	28	52	75	1.1	58	5.0	393	1497	2750	4247	4640	0.92	0.5	140	1.0	72	55	-1107	5000	3893	Dadanco ACB35	1,2,3,4
036-ICU002 237	S450-WORKSTATIONS	LINEAR	4	0.7	20	60	21	28	52	75	1.1	58	5.0	393	1497	2750	4247	4640	0.92	0.5	140	1.0	72	55	-1107	5000	3893	Dadanco ACB35	1,2,3,4
036-ICU002 238	S450-WORKSTATIONS	LINEAR	4	0.7	20	60	21	28	52	75	1.1	58	5.0	393	1497	2750	4247	4640	0.92	0.5	140	1.0	72	55	-1107	5000	3893	Dadanco ACB35	1,2,3,4
036-ICU002 239	S450-WORKSTATIONS	LINEAR	4	0.7	20	60	21	28	52	75	1.1	58	5.0	393	1497	2750	4247	4640	0.92	0.5	140	1.0	72	55	-1107	5000	3893	Dadanco ACB35	1,2,3,4
036-ICU002 240	S450-WORKSTATIONS	LINEAR	4	0.7	20	60	21	28	52	75	1.1	58	5.0	393	1497	2750	4247	4640	0.92	0.5	140	1.0	72	55	-1107	5000	3893	Dadanco ACB35	1,2,3,4
036-ICU002 241	S450-WORKSTATIONS	LINEAR	4	0.7	20	60	21	28	52	75	1.1	58	5.0	393	1497	2750	4247	4640	0.92	0.5	140	1.0	72	55	-1107	5000	3893	Dadanco ACB35	1,2,3,4
036-ICU002 242	S450-WORKSTATIONS	2X4	4	0.7	20	85	21	28	52	75	2.1	58	8.0	556	2121	5250	7371	7928	0.93	0.5	140	1.0	72	55	-1568	5000	3432	Dadanco ACB40	1,2,3,5
036-ICU002 243	S450-WORKSTATIONS	2X4	4	0.7	20	85	21	28	52	75	2.1	58	8.0	556	2121	5250	7371	7928	0.93	0.5	140	1.0	72	55	-1568	5000	3432	Dadanco ACB40	1,2,3,5
036-ICU002 244	S450-WORKSTATIONS	2X4	4	0.7	20	85	21	28	52	75	2.1	58	8.0	556	2121	5250	7371	7928	0.93	0.5	140	1.0	72	55	-1568	5000	3432	Dadanco ACB40	1,2,3,5
036-ICU002 245	S450-WORKSTATIONS	2X4	4	0.7	20	85	21	28	52	75	2.1	58	8.0	556	2121	5250	7371	7928	0.93	0.5	140	1.0	72	55	-1568	5000	3432	Dadanco ACB40	1,2,3,5
036-ICU002 246	S450-WORKSTATIONS	2X4	4	0.7	20	85	21	28	52	75	2.1	58	8.0	556	2121	5250	7371	7928	0.93	0.5	140	1.0	72	55	-1568	5000	3432	Dadanco ACB40	1,2,3,5
036-ICU002 247	S450-WORKSTATIONS	2X4	4	0.7	20	85	21	28	52	75	2.1	58	8.0	556	2121	5250	7371	7928	0.93	0.5	140	1.0	72	55	-1568	5000	3432	Dadanco ACB40	1,2,3,5
036-ICU002 248	S450-WORKSTATIONS	2X4	4	0.7	20	85	21	28	52	75	2.1	58	8.0	556	2121	5250	7371	7928	0.93	0.5	140	1.0	72	55	-1568	5000	3432	Dadanco ACB40	1,2,3,5
036-ICU002 249	S450-WORKSTATIONS	2X4	4	0.7	20	85	21	28	52	75	2.1	58	8.0	556	2121	5250	7371	7928	0.93	0.5	140	1.0	72	55	-1568	5000	3432	Dadanco ACB40	1,2,3,5
036-ICU002 250	S450-WORKSTATIONS	2X4	4	0.7	20	85	21	28	52	75	2.1	58	8.0	556	2121	5250	7371	7928	0.93	0.5	140	1.0	72	55	-1568	5000	3432	Dadanco ACB40	1,2,3,5
036-ICU002 251	S450-WORKSTATIONS	2X4	4	0.7	20	85	21	28	52	75	2.1	58	8.0	556	2121	5250	7371	7928	0.93	0.5	140	1.0	72	55	-1568	5000	3432	Dadanco ACB40	1,2,3,5
036-ICU002 252	S130E-OFFICE	LINEAR	4	0.7	20	40	21	28	52	75	0.5	58	2.5	262	998	1250	2248	2510	0.9	0.5	140	1.0	72	55	-738	5000	4262	Dadanco ACB35	1,2,3,4
036-ICU002 253	S130E-OFFICE	2x4	4	0.7	20	40	21	28	52	75	0.5	58	1.5	262	998	1250	2248	2510	0.9	0.5	140	1.0	72	55	-738	5000	4262	Dadanco ACB40	1,2,3,5

NOTES:

1. UNIT SHALL BE 4FT LENGTH
2. UNIT SHALL HAVE THE PERFORATED RETURN GRILLE. COLOR TO BE SELECTED BY THE ARCHITECT
3. UNIT SHALL BE PROVIDED WITH COOLING COIL AND HEATING COIL
4. THE LINEAR BEAM SHALL BE PROVIDED WITH SUPPLY AND RETURN GRILLE, 1-WAY DISCHARGE AND ADJUSTABLE DIRECTION. INTERGRAL DRAIN PAN IS REQUIRED.
5. THE 2X4 BEAM SHALL BE 2-WAY DISCHARGE

100% SUBMITTAL

AECOM

AECOM TECHNICAL SERVICES, INC.
3101 WILSON BOULEVARD
SUITE 900
ARLINGTON, VA 22201

T: 703-682-4900 F: 703.682.4901
www.aecom.com

SEAL AREA

STATE OF MARYLAND — PAUL ANDREW SABATINI — No. 13275 — REGISTERED PROFESSIONAL ENGINEER

KEY PLAN

REV	DATE	DESCRIPTION	S&R BR.	CUSTOMER	PM	SECT. HEAD

	INITIALS	DATE
DRAWN BY	GS	
CHECKED BY	TN	
A-E MANAGER	EW	
ENVIRONMENTAL BRANCH	JH	
SAFETY BRANCH	CS	
CM	MMD	
PM	RWP	
CUSTOMER	JWB	
ENG. BRANCH	DGL	

MECHANICAL SCHEDULES

M-006

FLIGHT PROJECTS BUILDING

NATIONAL AERONAUTICS AND SPACE ADMINISTRATION

GODDARD SPACE FLIGHT CENTER GREENBELT, MARYLAND
FACILITIES MANAGEMENT DIVISION

DATE ISSUED	CoF CODE OR WR#	AECOM PROJECT NO.	SCALE
10/12/2012	12GXAZ	60187636	1/8" = 1'-0"

FILE DATE: 10/24/2012 10:28:01 AM

SINGLE DUCT VAV TERMINAL UNIT SCHEDULE

ITEM	LOCATION	SERVING	UNIT CAPACITY CFM	BALANCED AIRFLOW CFM	MINIMUM AIRFLOW CFM	UNIT INLET SIZE	MAX AIR PRESS DROP IN. W.G.	MAX N.C.	INLET BRANCH DUCT SIZE UNLESS OTHERWISE NOTED ON THE PLANS	REHEATING COIL REDUCED CFM	EAT (DB) oF	HEATING CAP MBH	EWT (DB) oF	GPM	MIN NO. OF ROWS	MAX DP FT. H2O	HWS & HWR BRANCH PIPE SIZE	BASIS OF DESIGN	NOTES
036-VAV001001	LEVEL 1 NORTH	CONF RM - N107	0-900	800	400	8"Ø	0.39	30	8"Ø	400	55	17.3	140	2.0	1	2.0	3/4"	TITUS MODEL DESV	1,2,3,4,5
036-VAV001002	LEVEL 1 NORTH	PLANNING RM & WORK RM - N104 & N106	0-900	800	400	8"Ø	0.39	30	8"Ø	400	55	17.3	140	2.0	1	2.0	3/4"	TITUS MODEL DESV	1,2,3,4,5
036-VAV001003	LEVEL 1 NORTH	PLANNING RM-N112	0-500	400	200	6"Ø	0.39	30	6"Ø	200	55	8.6	140	1.0	1	2.0	3/4"	TITUS MODEL DESV	1,2,3,4,5
036-VAV001004	LEVEL 1 NORTH	PLANNING RM & WORK RM N116 AND N118	0-900	800	400	8"Ø	0.39	30	8"Ø	400	55	17.3	140	2.0	1	2.0	3/4"	TITUS MODEL DESV	1,2,3,4,5
036-VAV001005	LEVEL 1 NORTH	WORK RM & IT RM N109 AND N111	0-900	600	300	8"Ø	0.39	30	8"Ø	300	55	13.0	140	1.5	1	2.0	3/4"	TITUS MODEL DESV	1,2,3,4,5
036-VAV001006	LEVEL 1 NORTH	PLANNING RM & WORK RM N156 AND N158	0-900	800	400	8"Ø	0.39	30	8"Ø	400	55	17.3	140	2.0	1	2.0	3/4"	TITUS MODEL DESV	1,2,3,4,5
036-VAV001007	LEVEL 1 NORTH	PLANNING RM & OFF - N150 AND N154	0-900	550	275	8"Ø	0.39	30	8"Ø	275	55	11.9	140	1.5	1	2.0	3/4"	TITUS MODEL DESV	1,2,3,4,5
036-VAV001008	LEVEL 1 NORTH	PLANNING RM & WORK RM N144 AND N146	0-900	800	400	8"Ø	0.39	30	8"Ø	400	55	17.3	140	2.0	1	2.0	3/4"	TITUS MODEL DESV	1,2,3,4,5
036-VAV001009	LEVEL 1 NORTH	PANTRY/COPY/STORAGE-N119/N121/N117	0-500	400	200	6"Ø	0.39	30	6"Ø	200	55	8.6	140	1.0	1	2.0	3/4"	TITUS MODEL DESV	1,2,3,4,5
036-VAV001010	LEVEL 1 NORTH	WORK RM & TEMP RM N149 AND N151	0-900	600	300	8"Ø	0.39	30	8"Ø	300	55	13.0	140	1.5	1	2.0	3/4"	TITUS MODEL DESV	1,2,3,4,5
036-VAV001011	LEVEL 1 NORTH	PRODUCTION RM - N130J	0-900	600	300	8"Ø	0.39	30	8"Ø	300	55	13.0	140	1.5	1	2.0	3/4"	TITUS MODEL DESV	1,2,3,4,5
036-VAV001012	LEVEL 2 NORTH	CONF RM - N207	0-900	800	400	8"Ø	0.39	30	8"Ø	400	55	17.3	140	2.0	1	2.0	3/4"	TITUS MODEL DESV	1,2,3,4,5
036-VAV001013	LEVEL 2 NORTH	CONF RMS N223 AND N241	0-900	600	300	8"Ø	0.39	30	8"Ø	300	55	13.0	140	1.5	1	2.0	3/4"	TITUS MODEL DESV	1,2,3,4,5
036-VAV001014	LEVEL 2 NORTH	PANTRY/COPY/STORAGE-N219/N221/N215	0-500	400	200	6"Ø	0.39	30	6"Ø	200	55	8.6	140	1.0	1	2.0	3/4"	TITUS MODEL DESV	1,2,3,4,5
036-VAV001015	LEVEL 3 NORTH	CONF RM - N307	0-900	800	400	8"Ø	0.39	30	8"Ø	400	55	17.3	140	2.0	1	2.0	3/4"	TITUS MODEL DESV	1,2,3,4,5
036-VAV001016	LEVEL 3 NORTH	CONF RMS N323 AND N341	0-900	600	300	8"Ø	0.39	30	8"Ø	300	55	13.0	140	1.5	1	2.0	3/4"	TITUS MODEL DESV	1,2,3,4,5
036-VAV001017	LEVEL 3 NORTH	PANTRY/COPY/STORAGE-N319/N321/N315	0-500	400	200	6"Ø	0.39	30	6"Ø	200	55	8.6	140	1.0	1	2.0	3/4"	TITUS MODEL DESV	1,2,3,4,5
036-VAV001018	LEVEL 4 NORTH	CONF RM - N407	0-900	800	400	8"Ø	0.39	30	8"Ø	400	55	17.3	140	2.0	1	2.0	3/4"	TITUS MODEL DESV	1,2,3,4,5
036-VAV001019	LEVEL 4 NORTH	CONF RMS N423 AND N441	0-900	600	300	8"Ø	0.39	30	8"Ø	300	55	13.0	140	1.5	1	2.0	3/4"	TITUS MODEL DESV	1,2,3,4,5
036-VAV001020	LEVEL 4 NORTH	PANTRY/COPY/STORAGE-N419/N421/N415	0-500	400	200	6"Ø	0.39	30	6"Ø	200	55	8.6	140	1.0	1	2.0	3/4"	TITUS MODEL DESV	1,2,3,4,5
036-VAV001021	LEVEL 1 LOBBY	LOBBY - C100	0-500	450	225	6"Ø	0.39	30	6"Ø	225	55	9.7	140	1.0	1	2.0	3/4"	TITUS MODEL DESV	1,2,3,4,5
036-VAV001022	LEVEL 1 LOBBY	LOBBY - C100	0-900	700	350	8"Ø	0.39	30	8"Ø	350	55	15.1	140	2.0	1	2.0	3/4"	TITUS MODEL DESV	1,2,3,4,5
036-VAV001023	LEVEL 1 CIRCULATION	CIRCULATION - N100	0-500	400	200	6"Ø	0.39	30	6"Ø	200	55	8.6	140	1.0	1	2.0	3/4"	TITUS MODEL DESV	1,2,3,4,5
036-VAV001024	LEVEL 1 CIRCULATION	SEATING - N130	0-350	200	100	5"Ø	0.39	30	6"Ø	100	55	4.5	140	0.5	1	2.0	3/4"	TITUS MODEL DESV	1,2,3,4,5
036-VAV001025	LEVEL 2 CIRCULATION	SEATING - N201	0-350	200	100	5"Ø	0.39	30	6"Ø	100	55	4.5	140	0.5	1	2.0	3/4"	TITUS MODEL DESV	1,2,3,4,5
036-VAV001026	LEVEL 3 CIRCULATION	SEATING - N303	0-350	200	100	5"Ø	0.39	30	6"Ø	100	55	4.5	140	0.5	1	2.0	3/4"	TITUS MODEL DESV	1,2,3,4,5
036-VAV001027	LEVEL 4 CIRCULATION	SEATING - N403	0-350	200	100	5"Ø	0.39	30	6"Ø	100	55	4.5	140	0.5	1	2.0	3/4"	TITUS MODEL DESV	1,2,3,4,5
036-VAV002001	LEVEL 1 SOUTH	CONF RM - S107	0-900	800	400	8"Ø	0.39	30	8"Ø	400	55	17.3	140	2.0	1	2.0	3/4"	TITUS MODEL DESV	1,2,3,4,5
036-VAV002002	LEVEL 1 SOUTH	PANTRY/COPY/STORAGE-S119/S121/S115	0-500	400	200	6"Ø	0.39	30	6"Ø	200	55	8.6	140	1.0	1	2.0	3/4"	TITUS MODEL DESV	1,2,3,4,5
036-VAV002003	LEVEL 1 SOUTH	CONF RMS S123 AND S141	0-900	600	300	8"Ø	0.39	30	8"Ø	300	55	13.0	140	1.5	1	2.0	3/4"	TITUS MODEL DESV	1,2,3,4,5
036-VAV002004	LEVEL 2 SOUTH	CONF RM - S207	0-900	800	400	8"Ø	0.39	30	8"Ø	400	55	17.3	140	2.0	1	2.0	3/4"	TITUS MODEL DESV	1,2,3,4,5
036-VAV002005	LEVEL 2 SOUTH	PANTRY/COPY/STORAGE-S219/S221/S215	0-500	400	200	6"Ø	0.39	30	6"Ø	200	55	8.6	140	1.0	1	2.0	3/4"	TITUS MODEL DESV	1,2,3,4,5
036-VAV002006	LEVEL 2 SOUTH	CONF RMS S223 AND S241	0-900	600	300	8"Ø	0.39	30	8"Ø	300	55	13.0	140	1.5	1	2.0	3/4"	TITUS MODEL DESV	1,2,3,4,5
036-VAV002007	LEVEL 3 SOUTH	CONF RM - S307	0-900	800	400	8"Ø	0.39	30	8"Ø	400	55	17.3	140	2.0	1	2.0	3/4"	TITUS MODEL DESV	1,2,3,4,5
036-VAV002008	LEVEL 3 SOUTH	PANTRY/COPY/STORAGE-S319/S321/S315	0-500	400	200	6"Ø	0.39	30	6"Ø	200	55	8.6	140	1.0	1	2.0	3/4"	TITUS MODEL DESV	1,2,3,4,5
036-VAV002009	LEVEL 3 SOUTH	CONF RMS S323 AND S341	0-900	600	300	8"Ø	0.39	30	8"Ø	300	55	13.0	140	1.5	1	2.0	3/4"	TITUS MODEL DESV	1,2,3,4,5
036-VAV002010	LEVEL 4 SOUTH	CONF RM - S407	0-900	800	400	8"Ø	0.39	30	8"Ø	400	55	17.3	140	2.0	1	2.0	3/4"	TITUS MODEL DESV	1,2,3,4,5
036-VAV002011	LEVEL 4 SOUTH	PANTRY/COPY/STORAGE-S419/S421/S415	0-500	400	200	6"Ø	0.39	30	6"Ø	200	55	8.6	140	1.0	1	2.0	3/4"	TITUS MODEL DESV	1,2,3,4,5
036-VAV002012	LEVEL 4 SOUTH	LIBRARY - S401	0-900	600	300	8"Ø	0.39	30	8"Ø	300	55	13.0	140	1.5	1	2.0	3/4"	TITUS MODEL DESV	1,2,3,4,5
036-VAV002013	LEVEL 2 LOBBY	LOBBY - C200	0-900	750	375	8"Ø	0.39	30	8"Ø	375	55	16.2	140	2.0	1	2.0	3/4"	TITUS MODEL DESV	1,2,3,4,5
036-VAV002014	LEVEL 2 LOBBY	SYMPOSIUM - C211	0-2000	1800	900	12"Ø	0.39	30	12"Ø	900	55	38.9	140	4.0	1	2.0	3/4"	TITUS MODEL DESV	1,2,3,4,5
036-VAV002015	LEVEL 2 LOBBY	CONF RM - C202	0-900	700	350	8"Ø	0.39	30	8"Ø	350	55	15.1	140	2.0	1	2.0	3/4"	TITUS MODEL DESV	1,2,3,4,5
036-VAV002016	LEVEL 2 LOBBY	LOBBY - C200	0-900	700	350	8"Ø	0.39	30	8"Ø	350	55	15.1	140	1.5	1	2.0	3/4"	TITUS MODEL DESV	1,2,3,4,5
036-VAV002017	LEVEL 3 LOBBY	LOBBY - C300	0-900	650	325	8"Ø	0.39	30	8"Ø	325	55	14.0	140	1.5	1	2.0	3/4"	TITUS MODEL DESV	1,2,3,4,5
036-VAV002018	LEVEL 3 LOBBY	CONF RM - C302	0-900	600	300	8"Ø	0.39	30	8"Ø	300	55	13.0	140	1.5	1	2.0	3/4"	TITUS MODEL DESV	1,2,3,4,5
036-VAV002019	LEVEL 3 LOBBY	LOBBY - C300	0-900	600	300	8"Ø	0.39	30	8"Ø	300	55	13.0	140	1.5	1	2.0	3/4"	TITUS MODEL DESV	1,2,3,4,5
036-VAV002020	LEVEL 4 LOBBY	LOBBY - C400	0-900	600	300	8"Ø	0.39	30	8"Ø	300	55	13.0	140	1.5	1	2.0	3/4"	TITUS MODEL DESV	1,2,3,4,5
036-VAV002021	LEVEL 4 LOBBY	CONF RM - 402	0-900	600	300	8"Ø	0.39	30	8"Ø	300	55	13.0	140	1.5	1	2.0	3/4"	TITUS MODEL DESV	1,2,3,4,5
036-VAV002022	LEVEL 4 LOBBY	LOBBY - C400	0-900	600	300	8"Ø	0.39	30	8"Ø	300	55	13.0	140	1.5		2.0	3/4"	TITUS MODEL DESV	1,2,3,4,5
036-VAV002023	LEVEL 1 CIRCULATION	SEATING - S101	0-300	200	100	5"Ø	0.39	30	6"Ø	100	55	4.5	140	0.5	1	2.0	3/4"	TITUS MODEL DESV	1,2,3,4,5
036-VAV002024	LEVEL 2 CIRCULATION	SEATING - S203	0-300	200	100	5"Ø	0.39	30	6"Ø	100	55	4.5	140	0.5	1	2.0	3/4"	TITUS MODEL DESV	1,2,3,4,5
036-VAV002024	LEVEL 3 CIRCULATION	SEATING - S303	0-300	200	100	5"Ø	0.39	30	6"Ø	100	55	4.5	140	0.5	1	2.0	3/4"	TITUS MODEL DESV	1,2,3,4,5
036-VAV002024	LEVEL 4 CIRCULATION	SEATING - S403	0-300	200	100	5"Ø	0.39	30	6"Ø	100	55	4.5	140	0.5	1	2.0	3/4"	TITUS MODEL DESV	1,2,3,4,5

NOTES:
1 UNIT SHALL BE PROVIDED WITH 120V/24V TRANSFORMER
2 UNIT SHALL BE PROVIDED WITH DISCONNECT SWITCH
3 UNIT SHALL BE PRESSURE INDEPENDENT
4 UNIT SHALL BE ACOUSTICALLY LINED
5 MINIMUM AIRFLOW SETTING SHALL BE 50% OF ITS BALANCED AIRFLOW

AIR SEPARATOR SCHEDULE

UNIT NO.	LOCATION	SERVES	CAPACITY (GPM)	MAX WPD (FT)	TYPE	BASIS OF DESIGN	NOTES
036-ASP001	MECHICAL PUMP RM-C110	HEATING WATER SYSTEM	550	4	TANGENTIAL	TACO AC5	1,2
036-ASP002	MECHICAL PUMP RM-C110	HIGH TEMPERATURE CHILLED WATER SYSTEM	550	4	TANGENTIAL	TACO AC5	1,2

NOTES:
1. UNIT SHALL BE PROVIDED WITH STRAINER
2. UNIT SHALL BE MEET ASME REQUIREMENT OF 150 PSIG RATING

HOT WATER UNIT HEATER SCHEDULE

MARK	SERVE	TYPE	CAPACITY MBH	AIR DATA CFM	HOT WATER EWT F	HOT WATER LWT F	HOT WATER GPM	FAN DATA HP	FAN DATA RPM	FAN DATA V/HZ/PH	BASIS OF DESIGN	NOTES
036-MUH001	PH MECH RM-NORTH	PROPELLER	33.8	730	180	160	3.4	1/15	1550	115/60/1	RITTLING RH-47	1,2,3
036-MUH002	PH MECH RM-SOUTH	PROPELLER	33.8	730	180	160	3.4	1/15	1550	115/60/1	RITTLING RH-47	1,2,3
036-MUH003	LEVEL 1 PLUMBING RM	PROPELLER	33.8	730	180	160	3.4	1/15	1550	115/60/1	RITTLING RH-47	1,2,3

NOTES
1. UNIT SHALL BE PROVIDED WITH UNIT MOUNTED THERMOSTAT
2. SUPPLY FAN SHALL BE PROVIDED WITH MULTI-SPEEDS CONTROLLER
3. UNIT SHALL BE PROVIDED WITH OVER CURRENT PROTECTION

EXPANSION TANK SCHEDULE

TANK NO.	LOCATION	SERVES	TANK VOL.	MIN ACCEPTANCE VOLUME (GAL)	BASIS OF DESIGN	NOTES
036-EXT001	MECHICAL PUMP RM-C110	HEATING WATER SYSTEM	119	61	TACO CA-450	1,2
036-EXT002	MECHICAL PUMP RM-C110	HIGH TEMPERATURE CHILLED WATER SYSTEM	23	11	TACO CA-90	1,2

NOTES:
1. UNIT SHALL BE BLADDER TYPE
2. UNIT SHALL BE MEET ASME REQUIREMENT OF 150 PSIG RATING

FAN SCHEDULE

MARK	LOCATION	SERVES	TYPE	CFM	SP (IN WG)	WHEEL DIA. (IN)	RPM	DRIVE	MOTOR HP	MOTOR V/Hz/P	BASIS OF DESIGN	NOTES
036-EXH001	ROOF	TOILET EXHAUST	EXHAUST	2,550	0.95	18	1140	DIRECT	3/4	460/60/3	GREENHECK G180-B	1,2,3
036-EXH002	ROOF	PRINT RM & LOUNGE	EXHAUST	1,200	0.95	16	1725	DIRECT	1/2	115/60/1	GREENHECK G131-A	1,2,3
036-EXH003	ROOF	PRINT RM & LOUNGE	EXHAUST	1,200	0.95	16	1725	DIRECT	1/2	115/60/1	GREENHECK G131-A	1,2,3
036-SAF001	LEVEL 1	PUMP RM AND ELECTRICAL RM	SUPPLY	4,000	1	23	1275	BELT	3	460/60/3	GREENHECK BSQ-160-30	1,3

NOTES
1. UNIT SHALL BE PROVIDED WITH PROPER NEMA DISCONNECT FOR OUTDOOR INSTALLATION
2. UNIT SHALL BE PROVIDED WITH BACKDRAFT DAMPER
3. UNIT SHALL BE PROVIDED WITH OVERCURRENT PROTECTION

DUCT SOUND ATTENUATOR SCHEDULE

MARK	SERVING	DIMENSION WIDTH (IN)	DIMENSION HEIGHT (IN)	DIMENSION LENGHT (IN)	CFM	VELOCITY (FPM)	SILENCER P.D. (IN W.G.)	DYNAMIC INSERTION LOSS 63HZ	125HZ	250HZ	500HZ	1000HZ	2000HZ	4000HZ	8000HZ	BASIS OF DESIGN	NOTES
DSA001	ACS001	50	40	84	27000	1944	0.16	5	5	9	16	24	23	17	10	VIBRO-ACOUSTIC MODEL REFL-UHV-F9	2, 3, 4
DSA002	ACS001	50	40	60	27000	1944	0.08	5	4	11	22	30	24	20	20	VIBRO-ACOUSTIC MODEL EXRD-UHV-F8	1, 2, 3
DSA003	ACS002	50	40	84	27000	1944	0.16	5	5	9	16	24	23	17	10	VIBRO-ACOUSTIC MODEL RFL-UHV-F9	1, 2, 3
DSA004	ACS002	50	40	60	27000	1944	0.08	5	4	11	22	30	24	20	19	VIBRO-ACOUSTIC MODEL EXRD-UHV-F8	1, 2, 3

NOTES:
1. UNIT SHALL BE A STRAIGHT SILENCER
2. LENGHT INDICATED IS CENTERLINE LENGHT
3. UNIT SHALL BE THERMALLY INSULATED ALL FOUR FACES
4. UNIT SHALL BE ELBOW SILENCER.

STEAM CONDENSATE RETURN PUMP SCHEDULE

MARK	LOCATION	SERVING	PUMP QTY	PUMP CAPACITY (GPM)	PUMP DISCHARGE PRESSURE (PSI)	PUMP MOTOR POWER (HP)	PUMP MOTOR V/Hz/PH	PIPE SIZE IN (IN)	PIPE SIZE OUT (IN)	PIPE SIZE VENT (IN)	RECEIVER CAPACITY (GAL)	BASIS OF DESIGN	NOTES
036-CRP001 & CRP002	PUMP ROOM	036-HWC001	2	18	30	1/2	115/60/1	2	1	1-1/4	21	SPIRAX SARCO GC3D211	1,2,4
036-CRP003 & CRP004	PLUMBING RM	036-DWC001	2	18	30	1/2	115/60/1	2	1	1-1/4	21	SPIRAX SARCO GC3D211	1,2,4
036-CRP005 & CRP006	PENTHOUSE	036-ACS001	2	18	30	1/2	115/60/1	2	1	1-1/4	21	SPIRAX SARCO GC3D211	1,2,4
036-CRP007& CRP008	PENTHOUSE	036-ACS002	2	18	30	1/2	115/60/1	2	1	1-1/4	21	SPIRAX SARCO GC3D211	1,2,4

NOTES:
1. SHALL BE A DUPLEX PUMPING/RECEIVER PACKAGE.
2. UNIT SHALL BE PROVIDED WITH COMPLETE CONTROL PANEL, PILOT LIGHTS AND ALARMS
3. NOT USED.
4. RECEIVER SHALL BE CAST IRON, 036-CRT001.
5. RECEIVER SHALL BE PROVIDED WITH DUAL PUMPS, 036-CRP001 AND 036-CRP002.
6. UNIT SHALL BE PROVIDED WITH UNIT MOUNTED DISCONNECT SWITCH.

PRESSURE REDUCTION VALVE SCHEDULES

MARK	LOCATION	SERVING	DUTY	MEDIA	DESIGN FLOW RATE LBS/HR	PRESSURE ENTERING PSI	PRESSURE LEAVING PSI	ORIFICE Cv	MAXIMUM FLOWRATE LBS/ HR	VALVE SIZE IN	BASIS OF DESIGN	NOTES
036-PRV001	PLUMBING ROOM	036-STA001	70%	STEAM	3890	100	60	26	4315	2-1/2	SPIRAX SARCO SIZE 2-1/2" S-25P	1,2,3,4
036-PRV002	PLUMBING ROOM	036-STA001	70%	STEAM	3890	60	15	14	5881	2-1/2	SPIRAX SARCO SIZE 2-1/2" -25P	1,2,3,4
036-PRV003	PLUMBING ROOM	036-STA001	30%	STEAM	1945	100	60	14	2325	1-1/4	SPIRAX SARCO SIZE 1-1/4" -25P	1,2,3,4
036-PRV004	PLUMBING ROOM	036-STA001	30%	STEAM	1945	60	15	20	2100	1-1/2	SPIRAX SARCO SIZE 1-1/2" -25P	1,2,3,4

NOTES:
1. INSTALL SENSING LINE PER MANUFACTURE RECOMMENDATION.
2. CONNECTION TYPE SHALL BE FLANGE
3. NOISE LEVEL SHALL NOT BE GRATER THAN 85 DB
4. RELIEF VALVE SETTING AND LOCATION SHALL BE INSTALLED PER MANUFACTURE RECOMMENDATION

FLASH TANK SCHEDULES

MARK	LOCATION	SERVING	FLASH STEAM LBS/HR	UPSTEAM PRESSURE PSI	DOWNSTEAM PRESSURE PSI	TANK SIZE DIA x HEIGHT IN	BASIS OF DESIGN	NOTES
036-FLT001	PLUMBING ROOM	036-HWC001	240	15	0	6x47	SPIRAX SARCO SIZE 6"	1,2,3,4,5
036-FLT002	PLUMBING ROOM	036-DWC001	143	15	0	6x47	SPIRAX SARCO SIZE 6"	1,2,3,4,5
036-FLT003	PH MECH RM	036-ACS001	143	15	0	6x47	SPIRAX SARCO SIZE 6"	1,2,3,4,5
036-FLT004	PH MECH RM	036-ACS002	143	15	0	6x47	SPIRAX SARCO SIZE 6"	1,2,3,4,5

NOTES:
1. VESSEL SHALL BE ASME CODE STANDARD.
2. UNIT TYPE SHALL BE FLOOR STAND.
3. UNIT MATERIAL SHALL BE STEEL.
4. UNIT LINING MATERIAL SHALL BE CARBON STEEL.
5. INSTALL SPIRAX SARCO 1" FTI-75 STEAM TRAP ON THE CONDENSATE OUTLET OF THE FLASH TANK.

100% SUBMITTAL

AECOM
AECOM TECHNICAL SERVICES, INC.
3101 WILSON BOULEVARD
SUITE 900
ARLINGTON, VA 22201

T: 703-682-4900 F: 703.682.4901
www.aecom.com

SEAL AREA

STATE OF MARYLAND
PAUL ANDREW SABATIUK
No. 13276
REGISTERED PROFESSIONAL ENGINEER

KEY PLAN

REV	DATE	DESCRIPTION	S&R BR.	CUSTOMER	PM	SECT. HEAD

	INITIALS	DATE
DRAWN BY	Designer	
CHECKED BY	PS	
A-E MANAGER	EW	
ENVIRONMENTAL BRANCH	JH	
SAFETY BRANCH	CS	
CM	MMD	
PM	RWP	
CUSTOMER	JWB	
ENG. BRANCH	DGL	

MECHANICAL SCHEDULES

M-007

FLIGHT PROJECTS BUILDING

NATIONAL AERONAUTICS AND SPACE ADMINISTRATION
GODDARD SPACE FLIGHT CENTER GREENBELT, MARYLAND
FACILITIES MANAGEMENT DIVISION

DATE ISSUED	CoF CODE OR WR#	AECOM PROJECT NO.	SCALE
10/12/2012	12GXAZ	60187636	1/8" = 1'-0"

FILE DATE: 10/12/2012 9:25:45 AM

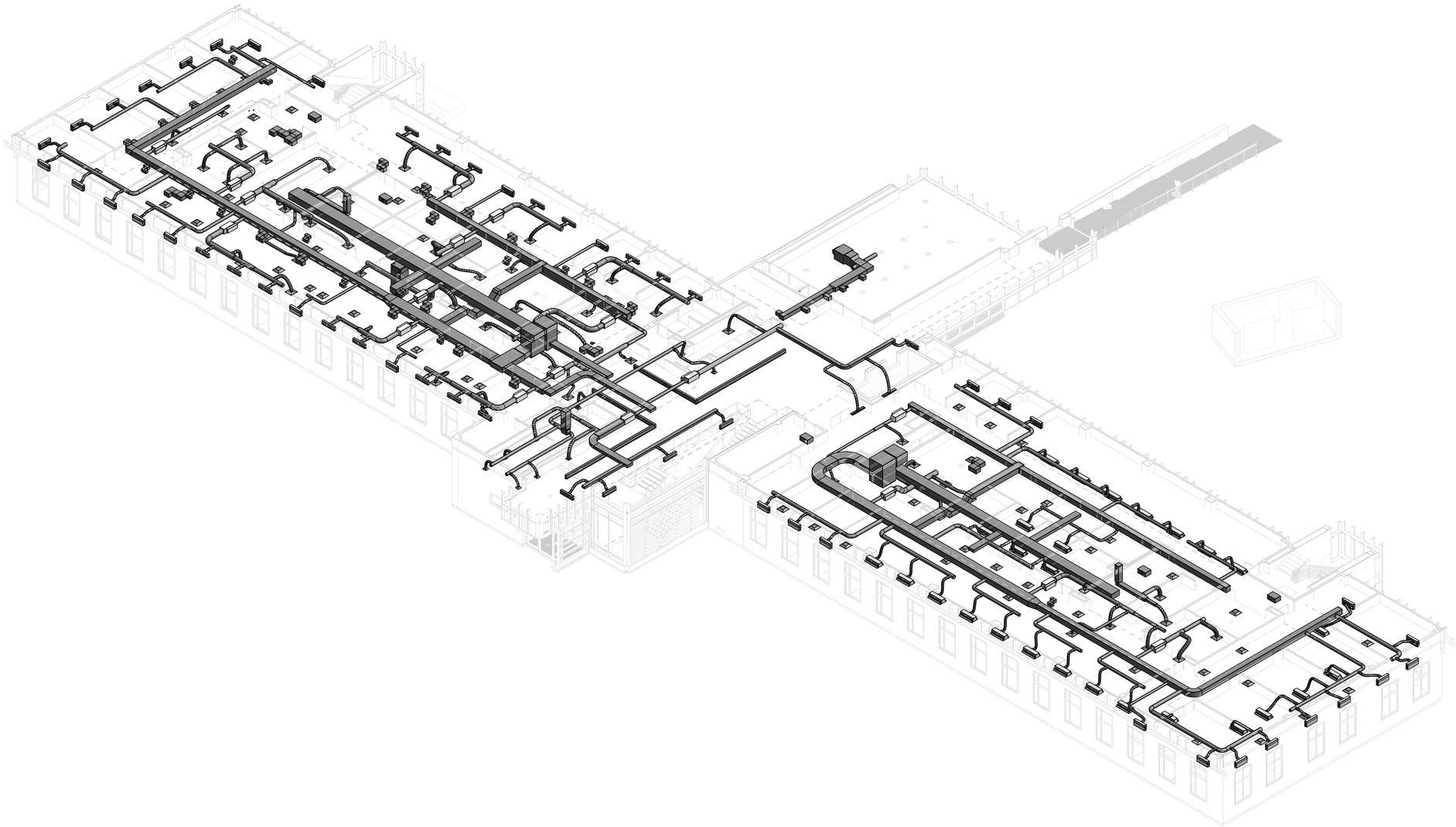

100% SUBMITTAL

NORTH

3/32"=1'-0" 8' 4' 0 12' 24'

AECOM

AECOM TECHNICAL SERVICES, INC.
3101 WILSON BOULEVARD
SUITE 900
ARLINGTON, VA 22201

T: 703-682-4900 F: 703.682.4901
www.aecom.com

SEAL AREA

STATE OF MARYLAND
PAUL WILLIAM STATUTT
No. 13276
REGISTERED PROFESSIONAL ENGINEER

KEY PLAN

REV	DATE	DESCRIPTION	S&R BR.	CUSTOMER	PM	SECT. HEAD

	INITIALS	DATE
DRAWN BY	Designer	
CHECKED BY	PS	
A-E MANAGER	EW	
ENVIRONMENTAL BRANCH	JH	
SAFETY BRANCH	CS	
CM	MMD	
PM	RWP	
CUSTOMER	JWB	
ENG. BRANCH	DGL	

LEVEL 1 3D OVERVIEW
HVAC

MH-101

FLIGHT PROJECTS BUILDING

NATIONAL AERONAUTICS AND SPACE ADMINISTRATION

GODDARD SPACE FLIGHT CENTER GREENBELT, MARYLAND
FACILITIES MANAGEMENT DIVISION

DATE ISSUED	CoF CODE OR WR#	AECOM PROJECT NO.	SCALE
10/12/2012	12GXAZ	60187636	

FILE DATE: 10/12/2012 9:27:54 AM

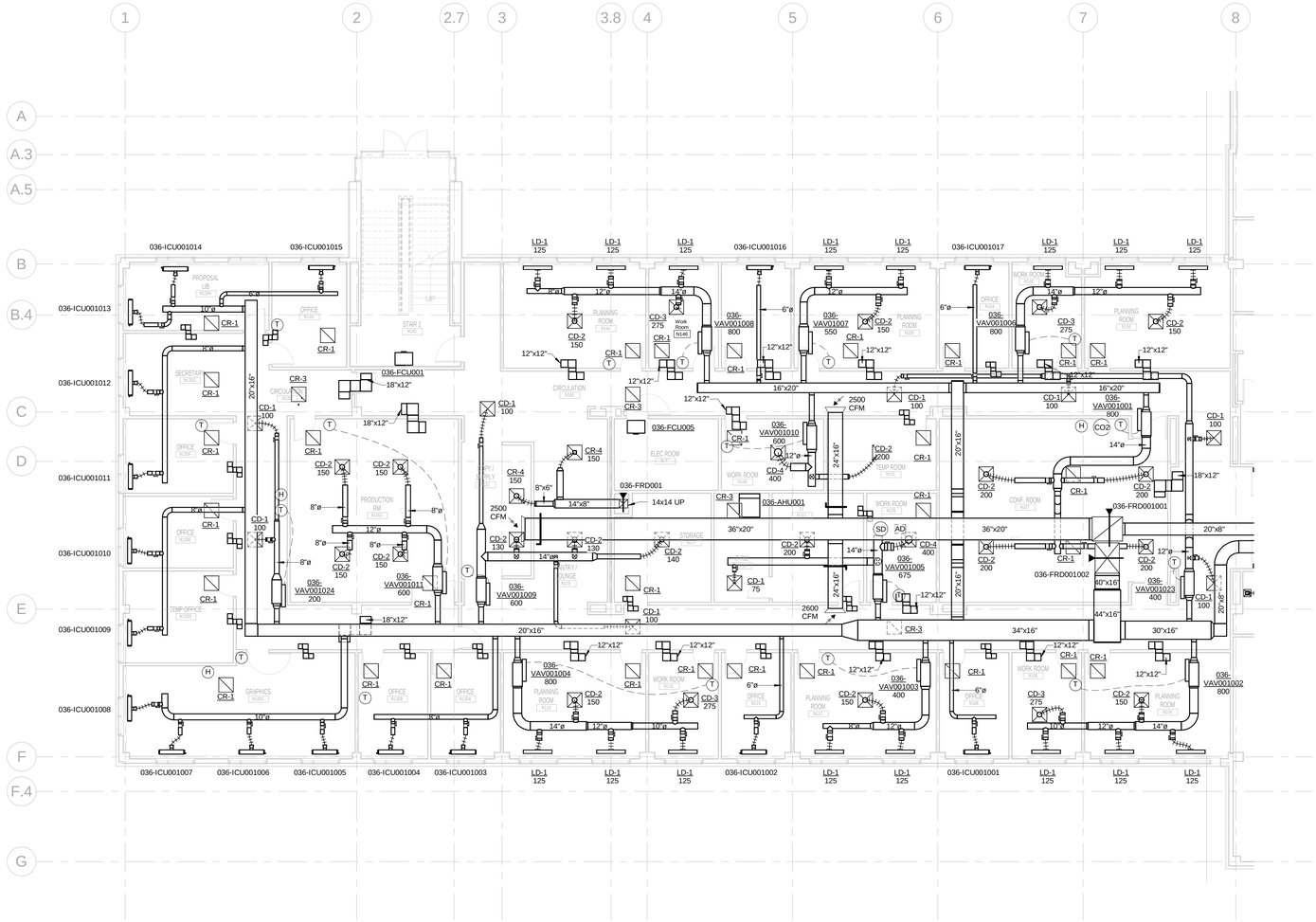

NORTH

1/8"=1'-0" 8' 4' 0 8' 16'

100% SUBMITTAL

AECOM

AECOM TECHNICAL SERVICES, INC.
3101 WILSON BOULEVARD
SUITE 900
ARLINGTON, VA 22201

T: 703-682-4900 F: 703.682.4901
www.aecom.com

SEAL AREA

STATE OF MARYLAND
PAUL WILLIAM STANTON
No. 13276
REGISTERED PROFESSIONAL ENGINEER

KEY PLAN

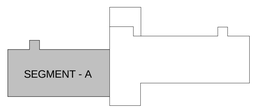

REV	DATE	DESCRIPTION	S&R BR.	CUSTOMER	PM	SECT. HEAD

	INITIALS	DATE
DRAWN BY	Designer	
CHECKED BY	PS	
A-E MANAGER	EW	
ENVIRONMENTAL BRANCH	JH	
SAFETY BRANCH	CS	
CM	MMD	
PM	RWP	
CUSTOMER	JWB	
ENG. BRANCH	DGL	

LEVEL 1 HVAC FLOOR PLAN - SEGMENT A

MH-101A

FLIGHT PROJECTS BUILDING

NATIONAL AERONAUTICS AND SPACE ADMINISTRATION

GODDARD SPACE FLIGHT CENTER GREENBELT, MARYLAND
FACILITIES MANAGEMENT DIVISION

DATE ISSUED	CoF CODE OR WR#	AECOM PROJECT NO.	SCALE
10/12/2012	12GXAZ	60187636	1/8" = 1'-0"

FILE DATE: 10/22/2012 12:31:52 PM

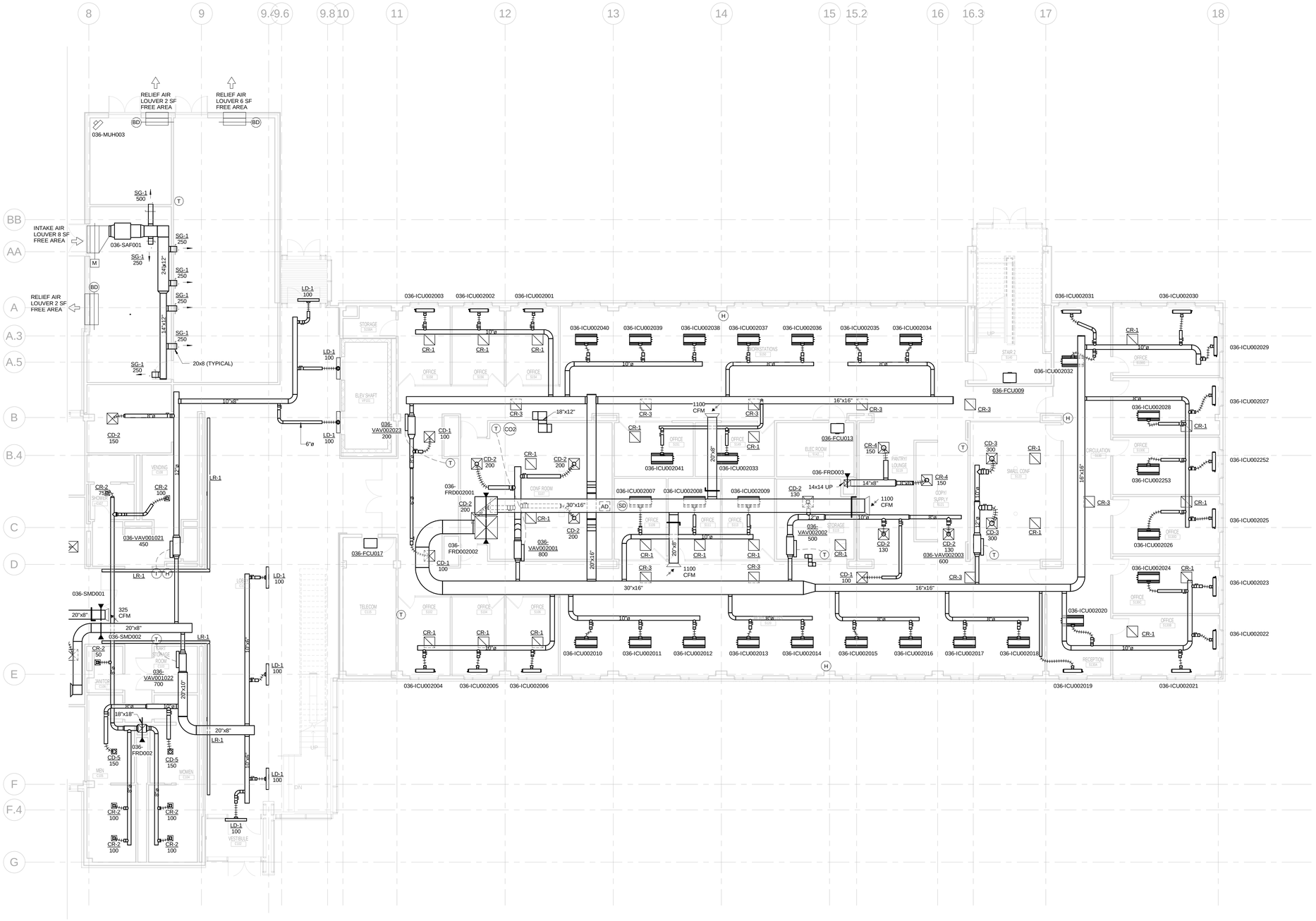

100% SUBMITTAL

NORTH

1/8"=1'-0" 8' 4' 0 8' 16'

AECOM

AECOM TECHNICAL SERVICES, INC.
3101 WILSON BOULEVARD
SUITE 900
ARLINGTON, VA 22201

T: 703-682-4900 F: 703.682.4901
www.aecom.com

SEAL AREA

STATE OF MARYLAND
PAUL SHEPARD
No. 13275
PROFESSIONAL ENGINEER

KEY PLAN

SEGMENT - B

REV	DATE	DESCRIPTION	S&R BR.	CUSTOMER	PM	SECT. HEAD

	INITIALS	DATE
DRAWN BY	Designer	
CHECKED BY	PS	
A-E MANAGER	EW	
ENVIRONMENTAL BRANCH	JH	
SAFETY BRANCH	CS	
CM	MMD	
PM	RWP	
CUSTOMER	JWB	
ENG. BRANCH	DGL	

LEVEL 1 HVAC FLOOR PLAN - SEGMENT B

MH-101B

FLIGHT PROJECTS BUILDING

NATIONAL AERONAUTICS AND SPACE ADMINISTRATION

GODDARD SPACE FLIGHT CENTER GREENBELT, MARYLAND
FACILITIES MANAGEMENT DIVISION

DATE ISSUED	CoF CODE OR WR#	AECOM PROJECT NO.	SCALE
10/12/2012	12GXAZ	60187636	1/8" = 1'-0"

FILE DATE: 10/22/2012 12:31:59 PM

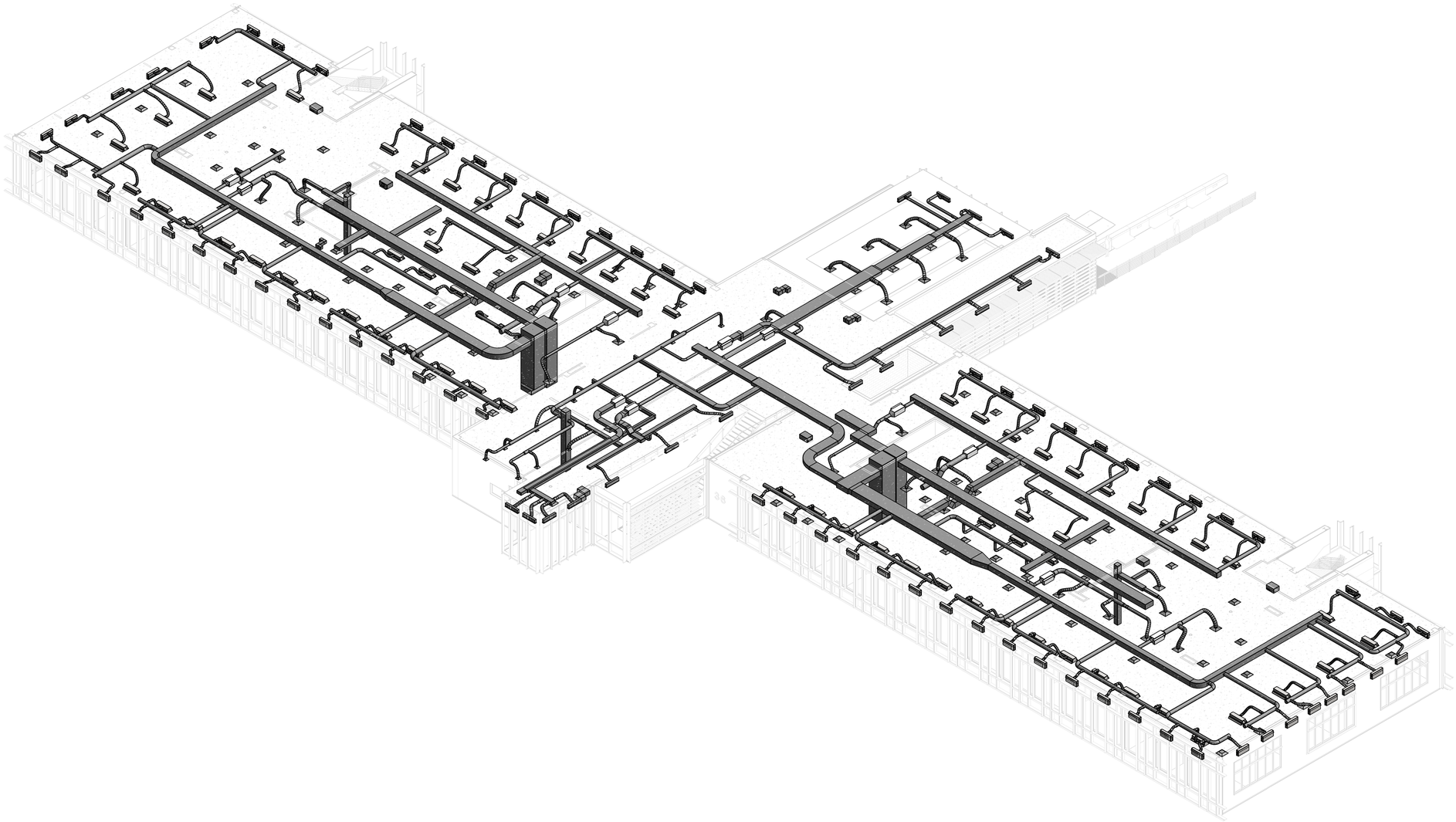

100% SUBMITTAL

NORTH

3/32"=1'-0" 8' 4' 0 12' 24'

AECOM

AECOM TECHNICAL SERVICES, INC.
3101 WILSON BOULEVARD
SUITE 900
ARLINGTON, VA 22201

T: 703-682-4900 F: 703.682.4901
www.aecom.com

SEAL AREA

STATE OF MARYLAND
PAUL SCHISTAD
No. 13828
REGISTERED
PROFESSIONAL ENGINEER

KEY PLAN

REV	DATE	DESCRIPTION	S&R BR.	CUSTOMER	PM	SECT. HEAD

	INITIALS	DATE
DRAWN BY	Designer	
CHECKED BY	PS	
A-E MANAGER	EW	
ENVIRONMENTAL BRANCH	JH	
SAFETY BRANCH	CS	
CM	MMD	
PM	RWP	
CUSTOMER	JWB	
ENG. BRANCH	DGL	

LEVEL 2 3D OVERVIEW
HVAC

MH-102

FLIGHT PROJECTS BUILDING

NATIONAL AERONAUTICS AND SPACE ADMINISTRATION

GODDARD SPACE FLIGHT CENTER GREENBELT, MARYLAND
FACILITIES MANAGEMENT DIVISION

DATE ISSUED	CoF CODE OR WR#	AECOM PROJECT NO.	SCALE
10/12/2012	12GXAZ	60187636	

FILE DATE: 10/12/2012 9:28:54 AM

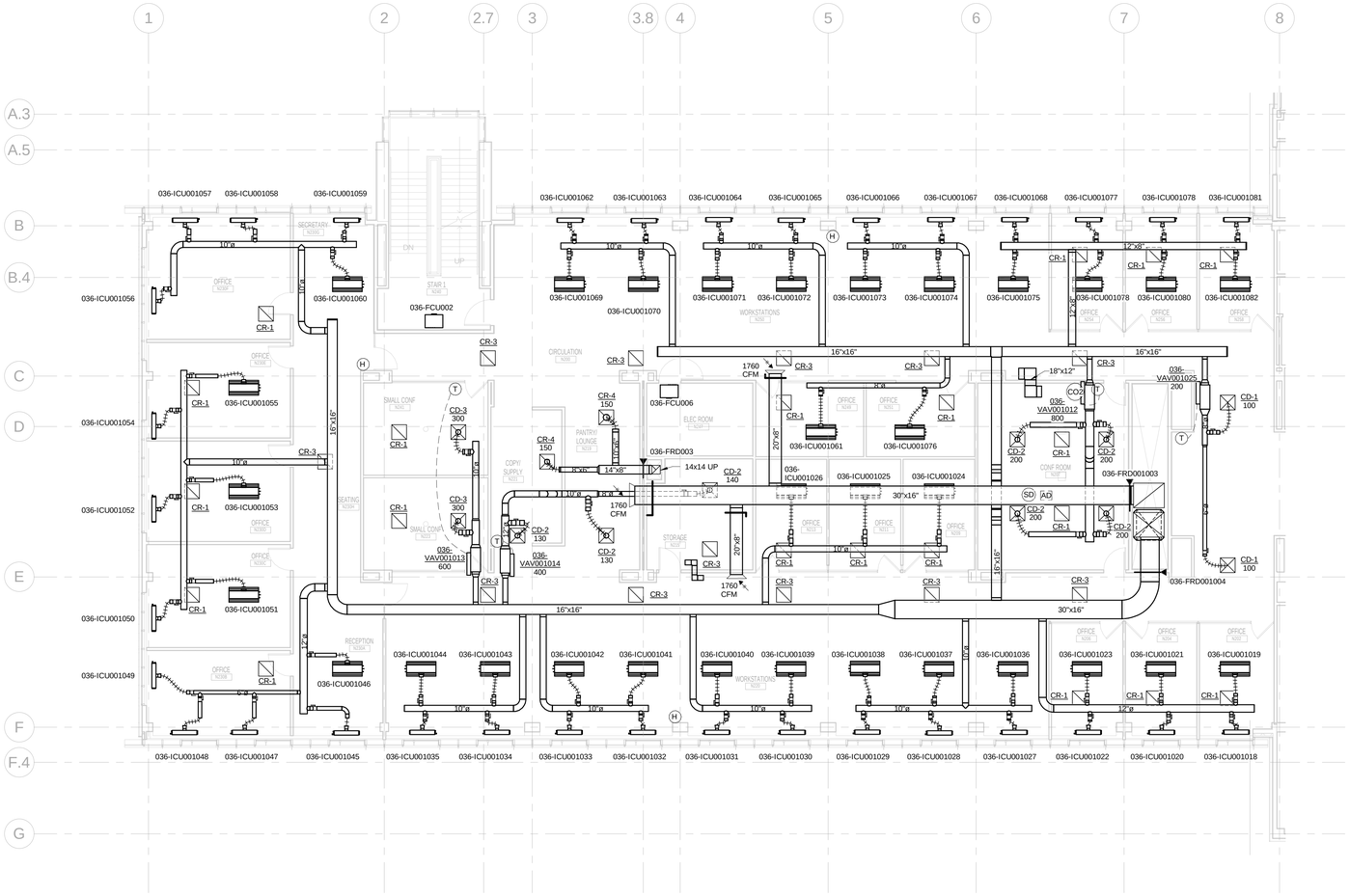

100% SUBMITTAL

NORTH

1/8"=1'-0" 8' 4' 0 8' 16'

AECOM

AECOM TECHNICAL SERVICES, INC.
3101 WILSON BOULEVARD
SUITE 900
ARLINGTON, VA 22201

T: 703-682-4900 F: 703.682.4901
www.aecom.com

SEAL AREA

STATE OF MARYLAND
PAUL SUNDER SUTHERLAND
No. 13276
SUTHERLAND
PROFESSIONAL ENGINEER

KEY PLAN

SEGMENT - A

REV	DATE	DESCRIPTION	S&R BR.	CUSTOMER	PM	SECT. HEAD

	INITIALS	DATE
DRAWN BY	Designer	
CHECKED BY	PS	
A-E MANAGER	EW	
ENVIRONMENTAL BRANCH	JH	
SAFETY BRANCH	CS	
CM	MMD	
PM	RWP	
CUSTOMER	JWB	
ENG. BRANCH	DGL	

LEVEL 2 HVAC FLOOR PLAN - SEGMENT A

MH-102A

FLIGHT PROJECTS BUILDING

NATIONAL AERONAUTICS AND SPACE ADMINISTRATION

GODDARD SPACE FLIGHT CENTER GREENBELT, MARYLAND
FACILITIES MANAGEMENT DIVISION

DATE ISSUED	CoF CODE OR WR#	AECOM PROJECT NO.	SCALE
10/12/2012	12GXAZ	60187636	1/8" = 1'-0"

FILE DATE: 10/12/2012 9:29:0 AM

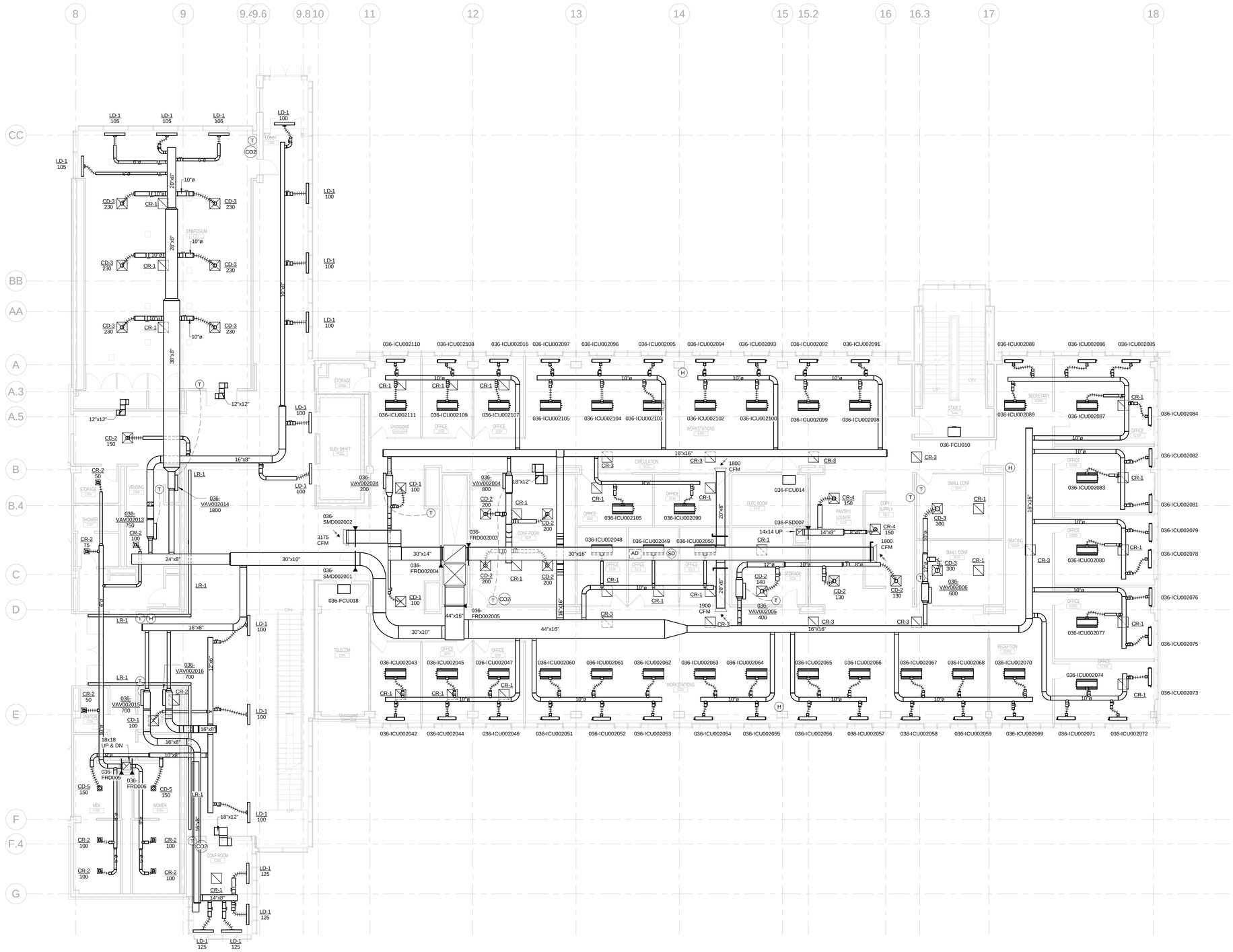

100% SUBMITTAL

NORTH

1/8"=1'-0" 8' 4' 0 8' 16'

AECOM

AECOM TECHNICAL SERVICES, INC.
3101 WILSON BOULEVARD
SUITE 900
ARLINGTON, VA 22201

T: 703-682-4900 F: 703.682.4901
www.aecom.com

SEAL AREA

STATE OF MARYLAND
PAUL WINTER SCHUTZ
No. 13276
REGISTERED
PROFESSIONAL ENGINEER

KEY PLAN

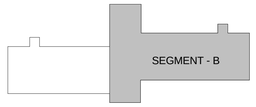

REV	DATE	DESCRIPTION	S&R BR.	CUSTOMER	PM	SECT. HEAD

	INITIALS	DATE
DRAWN BY	Designer	
CHECKED BY	PS	
A-E MANAGER	EW	
ENVIRONMENTAL BRANCH	JH	
SAFETY BRANCH	CS	
CM	MMD	
PM	RWP	
CUSTOMER	JWB	
ENG. BRANCH	DGL	

LEVEL 2 HVAC FLOOR PLAN - SEGMENT B

MH-102B

FLIGHT PROJECTS BUILDING

NATIONAL AERONAUTICS AND SPACE ADMINISTRATION

GODDARD SPACE FLIGHT CENTER GREENBELT, MARYLAND
FACILITIES MANAGEMENT DIVISION

DATE ISSUED	CoF CODE OR WR#	AECOM PROJECT NO.	SCALE
10/12/2012	12GXAZ	60187636	1/8" = 1'-0"

FILE DATE: 10/22/2012 12:32:06 PTM

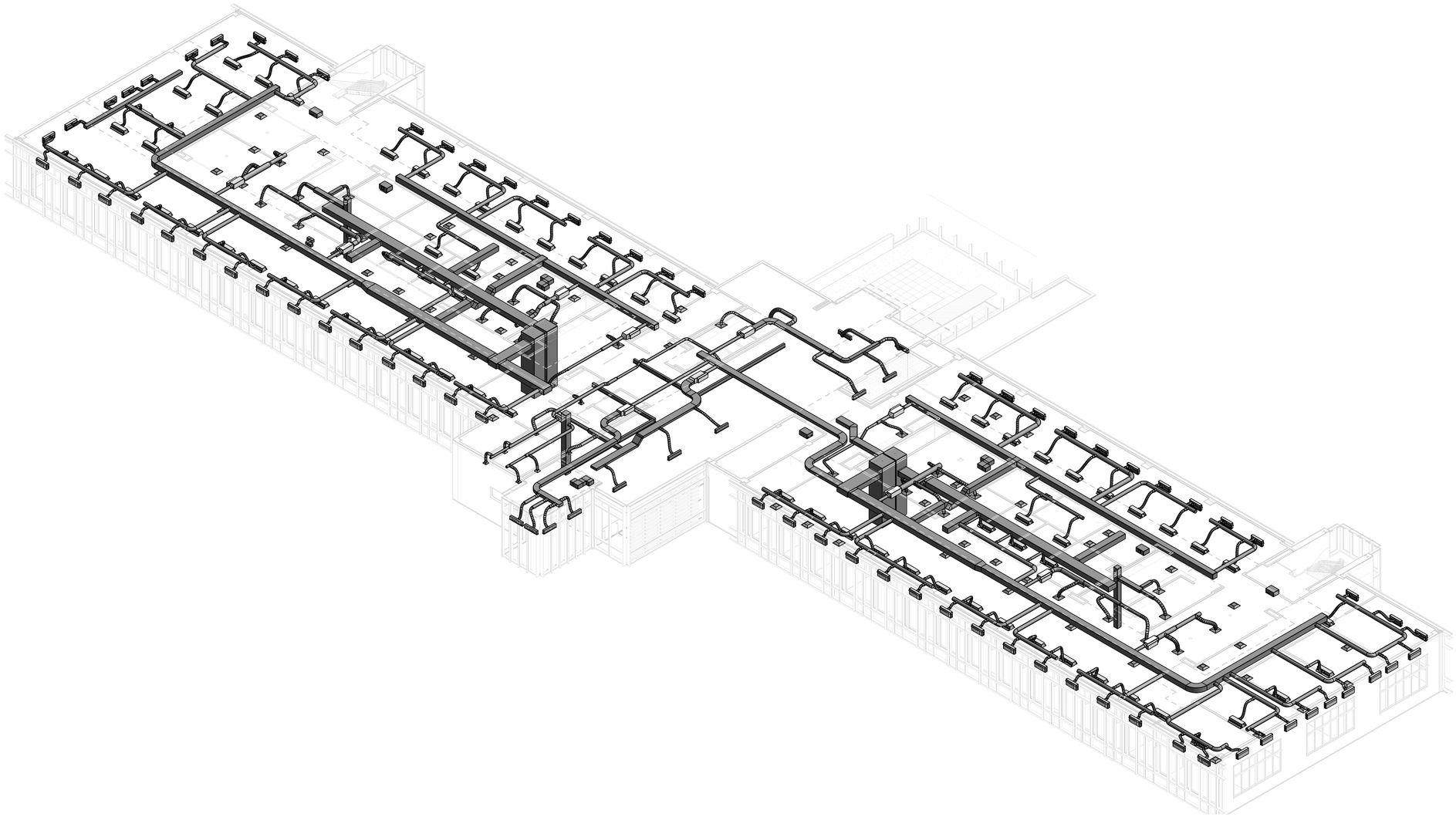

100% SUBMITTAL

NORTH

3/32"=1'-0" 8' 4' 0 12' 24'

AECOM

AECOM TECHNICAL SERVICES, INC.
3101 WILSON BOULEVARD
SUITE 900
ARLINGTON, VA 22201

T: 703-682-4900 F: 703.682.4901
www.aecom.com

SEAL AREA

STATE OF MARYLAND
PAUL DOUGLAS STRUTZ
No. 13276
REGISTERED PROFESSIONAL ENGINEER

KEY PLAN

REV	DATE	DESCRIPTION	S&R BR.	CUSTOMER	PM	SECT. HEAD

	INITIALS	DATE
DRAWN BY	Designer	
CHECKED BY	PS	
A-E MANAGER	EW	
ENVIRONMENTAL BRANCH	JH	
SAFETY BRANCH	CS	
CM	MMD	
PM	RWP	
CUSTOMER	JWB	
ENG. BRANCH	DGL	

LEVEL 3 3D OVERVIEW HVAC

MH-103

FLIGHT PROJECTS BUILDING

NATIONAL AERONAUTICS AND SPACE ADMINISTRATION

GODDARD SPACE FLIGHT CENTER GREENBELT, MARYLAND
FACILITIES MANAGEMENT DIVISION

DATE ISSUED	CoF CODE OR WR#	AECOM PROJECT NO.	SCALE
10/12/2012	12GXAZ	60187636	

FILE DATE: 10/12/2012 9:29:43 AM

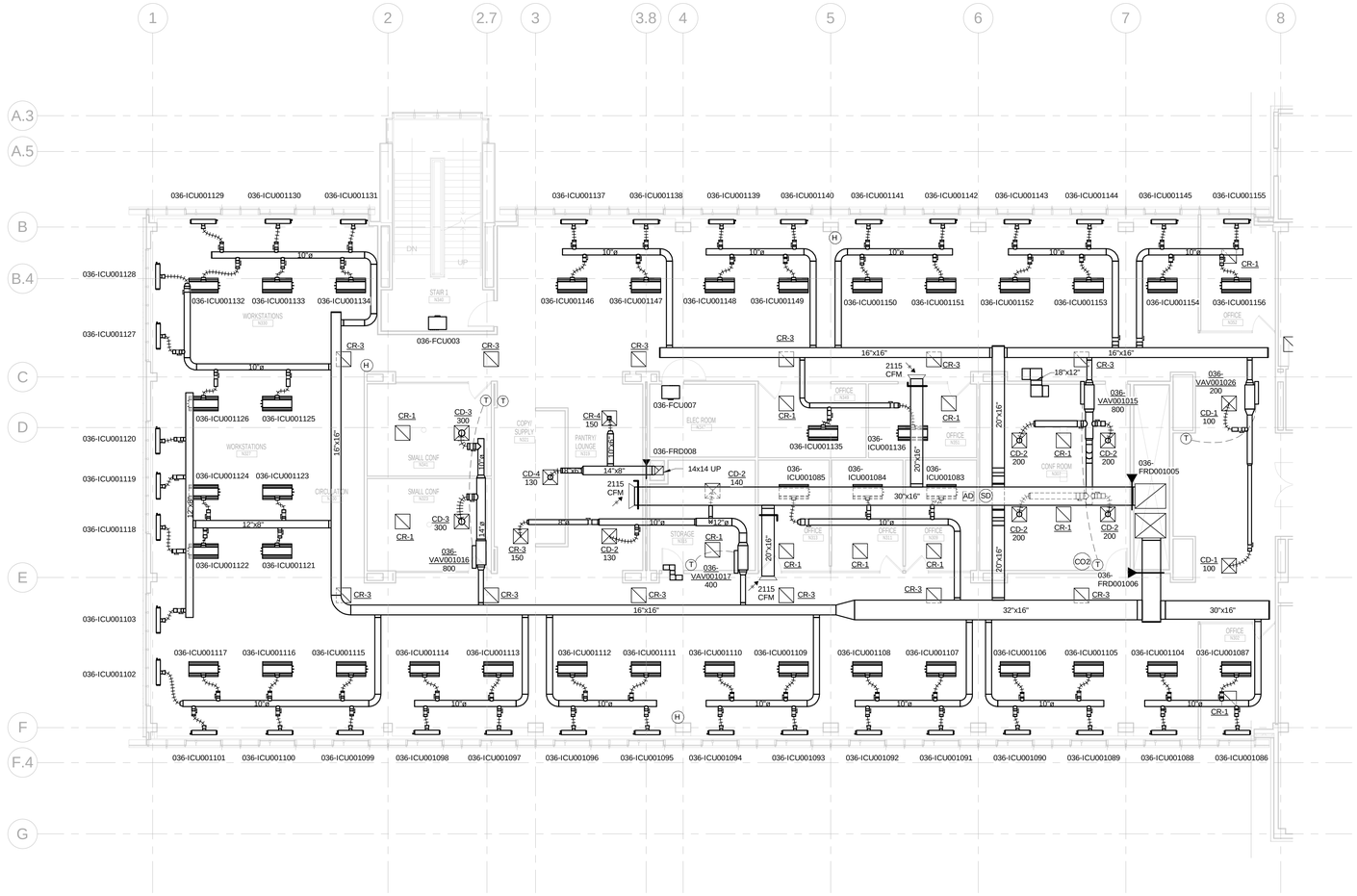

100% SUBMITTAL

NORTH

1/8"=1'-0" 8' 4' 0 8' 16'

AECOM

AECOM TECHNICAL SERVICES, INC.
3101 WILSON BOULEVARD
SUITE 900
ARLINGTON, VA 22201

T: 703-682-4900 F: 703.682.4901
www.aecom.com

SEAL AREA

STATE OF MARYLAND
PAUL SCHNEIDER STANTON
No. 13276
PROFESSIONAL ENGINEER

KEY PLAN

SEGMENT - A

REV	DATE	DESCRIPTION	S&R BR.	CUSTOMER	PM	SECT. HEAD

	INITIALS	DATE
DRAWN BY	Designer	
CHECKED BY	PS	
A-E MANAGER	EW	
ENVIRONMENTAL BRANCH	JH	
SAFETY BRANCH	CS	
CM	MMD	
PM	RWP	
CUSTOMER	JWB	
ENG. BRANCH	DGL	

LEVEL 3 HVAC FLOOR PLAN - SEGMENT A

MH-103A

FLIGHT PROJECTS BUILDING

NATIONAL AERONAUTICS AND SPACE ADMINISTRATION

GODDARD SPACE FLIGHT CENTER GREENBELT, MARYLAND
FACILITIES MANAGEMENT DIVISION

DATE ISSUED	CoF CODE OR WR#	AECOM PROJECT NO.	SCALE
10/12/2012	12GXAZ	60187636	1/8" = 1'-0"

FILE DATE: 10/12/2012 9:29:50 AM

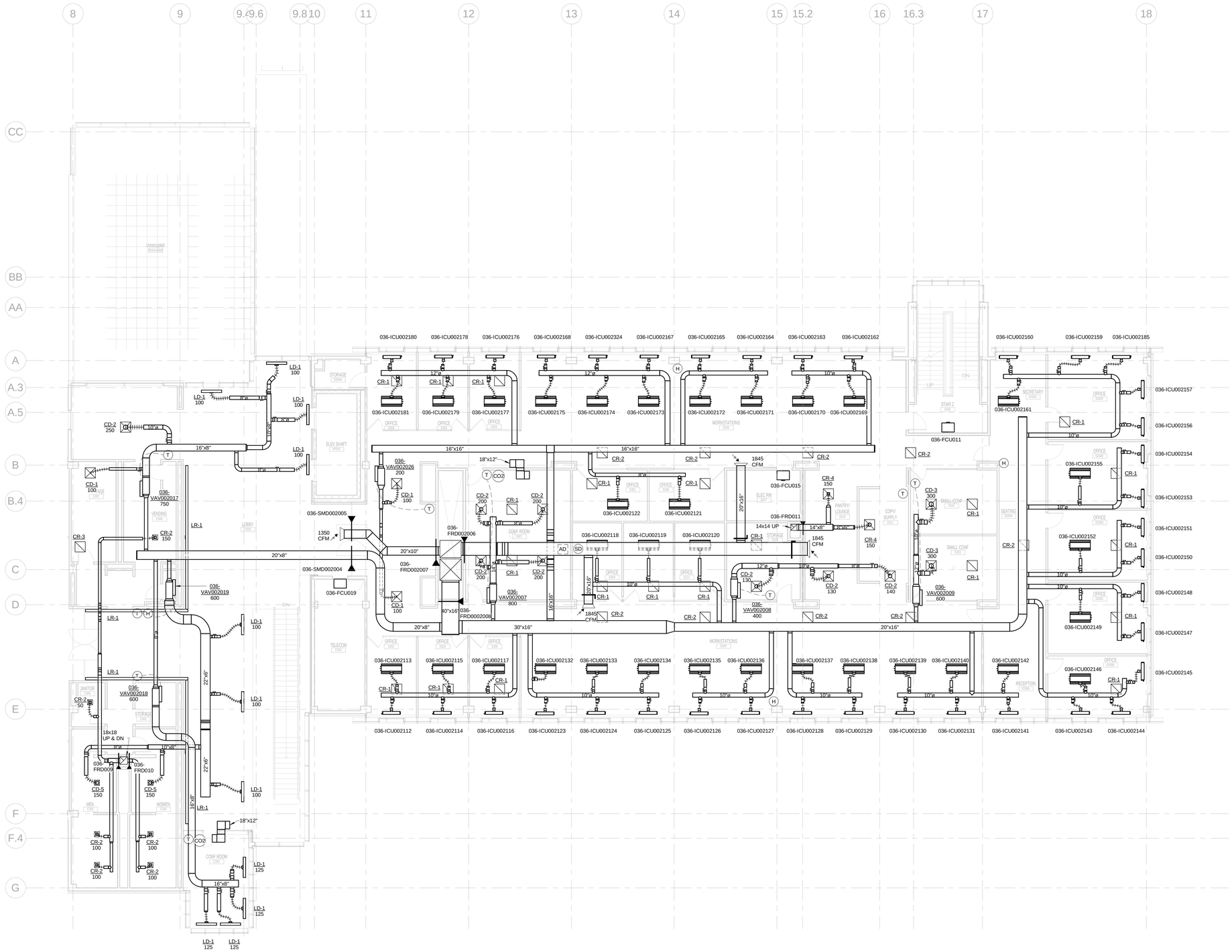

100% SUBMITTAL

NORTH

1/8"=1'-0" 8' 4' 0 8' 16'

AECOM

AECOM TECHNICAL SERVICES, INC.
3101 WILSON BOULEVARD
SUITE 900
ARLINGTON, VA 22201

T: 703-682-4900 F: 703.682.4901
www.aecom.com

SEAL AREA

STATE OF MARYLAND
PAUL UNDER SANITIZER
No. 13276
REGISTERED
PROFESSIONAL ENGINEER

KEY PLAN

SEGMENT - B

REV	DATE	DESCRIPTION	S&R BR.	CUSTOMER	PM	SECT. HEAD

	INITIALS	DATE
DRAWN BY	Designer	
CHECKED BY	PS	
A-E MANAGER	EW	
ENVIRONMENTAL BRANCH	JH	
SAFETY BRANCH	CS	
CM	MMD	
PM	RWP	
CUSTOMER	JWB	
ENG. BRANCH	DGL	

LEVEL 3 HVAC FLOOR PLAN - SEGMENT B

MH-103B

FLIGHT PROJECTS BUILDING

NATIONAL AERONAUTICS AND SPACE ADMINISTRATION

GODDARD SPACE FLIGHT CENTER GREENBELT, MARYLAND
FACILITIES MANAGEMENT DIVISION

DATE ISSUED	CoF CODE OR WR#	AECOM PROJECT NO.	SCALE
10/12/2012	12GXAZ	60187636	1/8" = 1'-0"

FILE DATE: 10/22/2012 12:32:10 PM

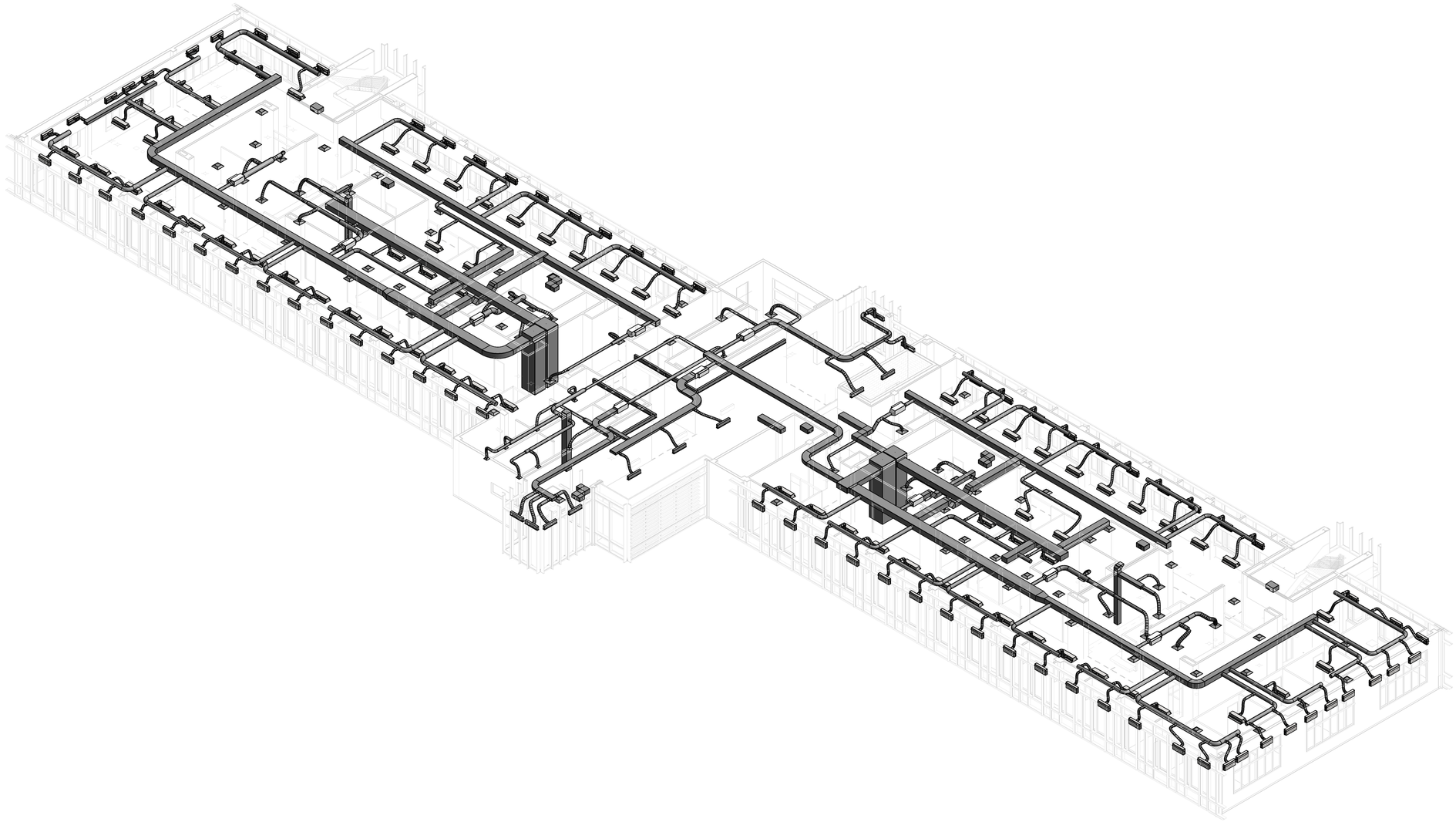

100% SUBMITTAL

NORTH

3/32"=1'-0" 8' 4' 0 12' 24'

AECOM

AECOM TECHNICAL SERVICES, INC.
3101 WILSON BOULEVARD
SUITE 900
ARLINGTON, VA 22201

T: 703-682-4900 F: 703.682.4901
www.aecom.com

SEAL AREA

STATE OF MARYLAND
PAUL JEFFREY SCHUTTE
No. 13876
REGISTERED
PROFESSIONAL ENGINEER

KEY PLAN

REV	DATE	DESCRIPTION	S&R BR.	CUSTOMER	PM	SECT. HEAD

	INITIALS	DATE
DRAWN BY	Designer	
CHECKED BY	PS	
A-E MANAGER	EW	
ENVIRONMENTAL BRANCH	JH	
SAFETY BRANCH	CS	
CM	MMD	
PM	RWP	
CUSTOMER	JWB	
ENG. BRANCH	DGL	

LEVEL 4 3D OVERVIEW
HVAC

MH-104

FLIGHT PROJECTS BUILDING

NATIONAL AERONAUTICS AND SPACE ADMINISTRATION

GODDARD SPACE FLIGHT CENTER GREENBELT, MARYLAND
FACILITIES MANAGEMENT DIVISION

DATE ISSUED	CoF CODE OR WR#	AECOM PROJECT NO.	SCALE
10/12/2012	12GXAZ	60187636	

FILE DATE: 10/12/2012 9:30:30 AM

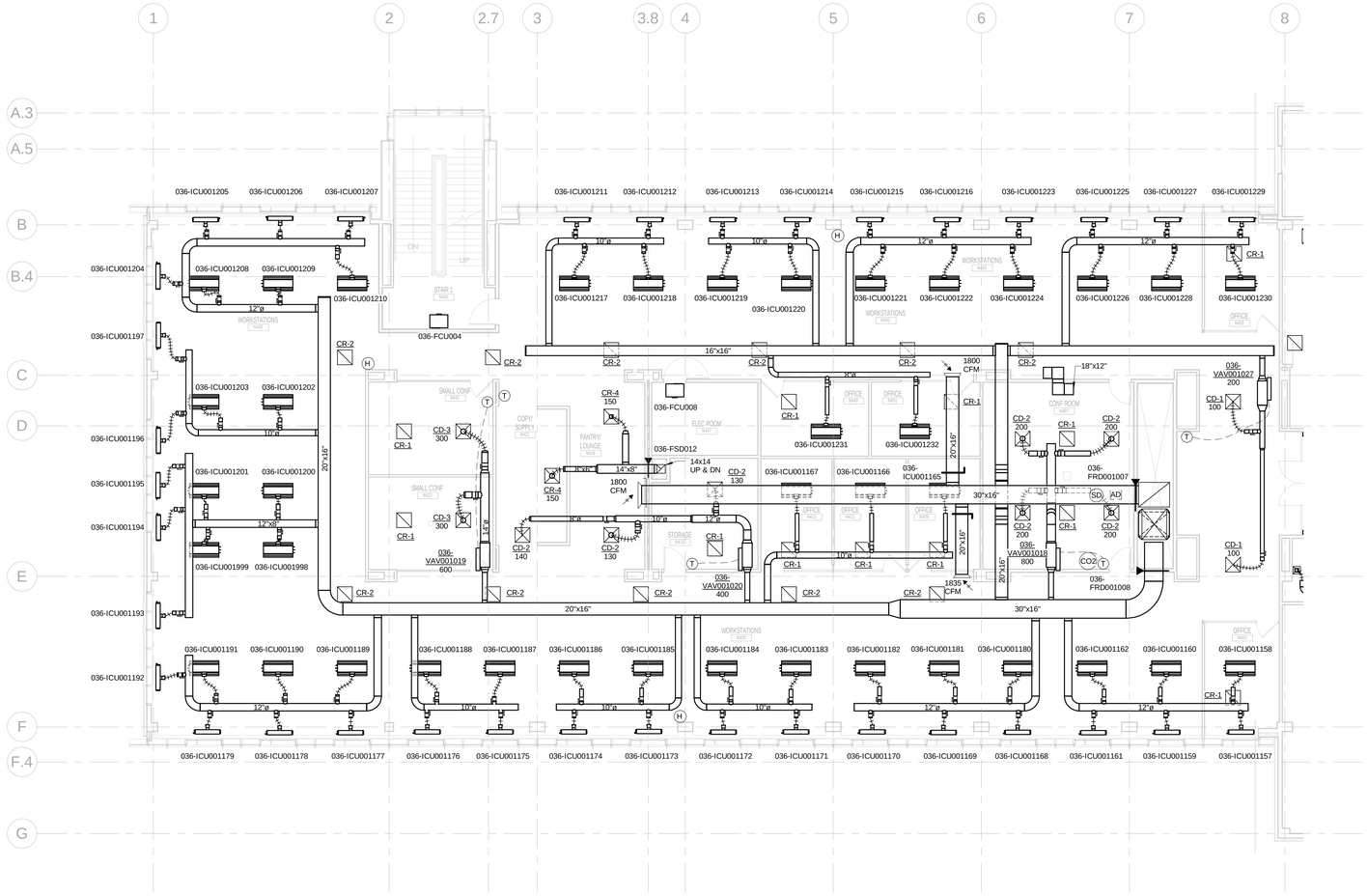

NORTH

1/8"=1'-0" 8' 4' 0 8' 16'

100% SUBMITTAL

AECOM

AECOM TECHNICAL SERVICES, INC.
3101 WILSON BOULEVARD
SUITE 900
ARLINGTON, VA 22201

T: 703-682-4900 F: 703.682.4901
www.aecom.com

SEAL AREA

STATE OF MARYLAND
PAUL SUMNER STANTON
No. 13276
PROFESSIONAL ENGINEER

KEY PLAN

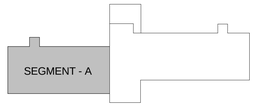

REV	DATE	DESCRIPTION	S&R BR.	CUSTOMER	PM	SECT. HEAD

	INITIALS	DATE
DRAWN BY	Designer	
CHECKED BY	PS	
A-E MANAGER	EW	
ENVIRONMENTAL BRANCH	JH	
SAFETY BRANCH	CS	
CM	MMD	
PM	RWP	
CUSTOMER	JWB	
ENG. BRANCH	DGL	

LEVEL 4 HVAC FLOOR PLAN - SEGMENT A

MH-104A

FLIGHT PROJECTS BUILDING

NATIONAL AERONAUTICS AND SPACE ADMINISTRATION

GODDARD SPACE FLIGHT CENTER GREENBELT, MARYLAND
FACILITIES MANAGEMENT DIVISION

DATE ISSUED	CoF CODE OR WR#	AECOM PROJECT NO.	SCALE
10/12/2012	12GXAZ	60187636	1/8" = 1'-0"

FILE DATE: 10/12/2012 9:30:36 AM

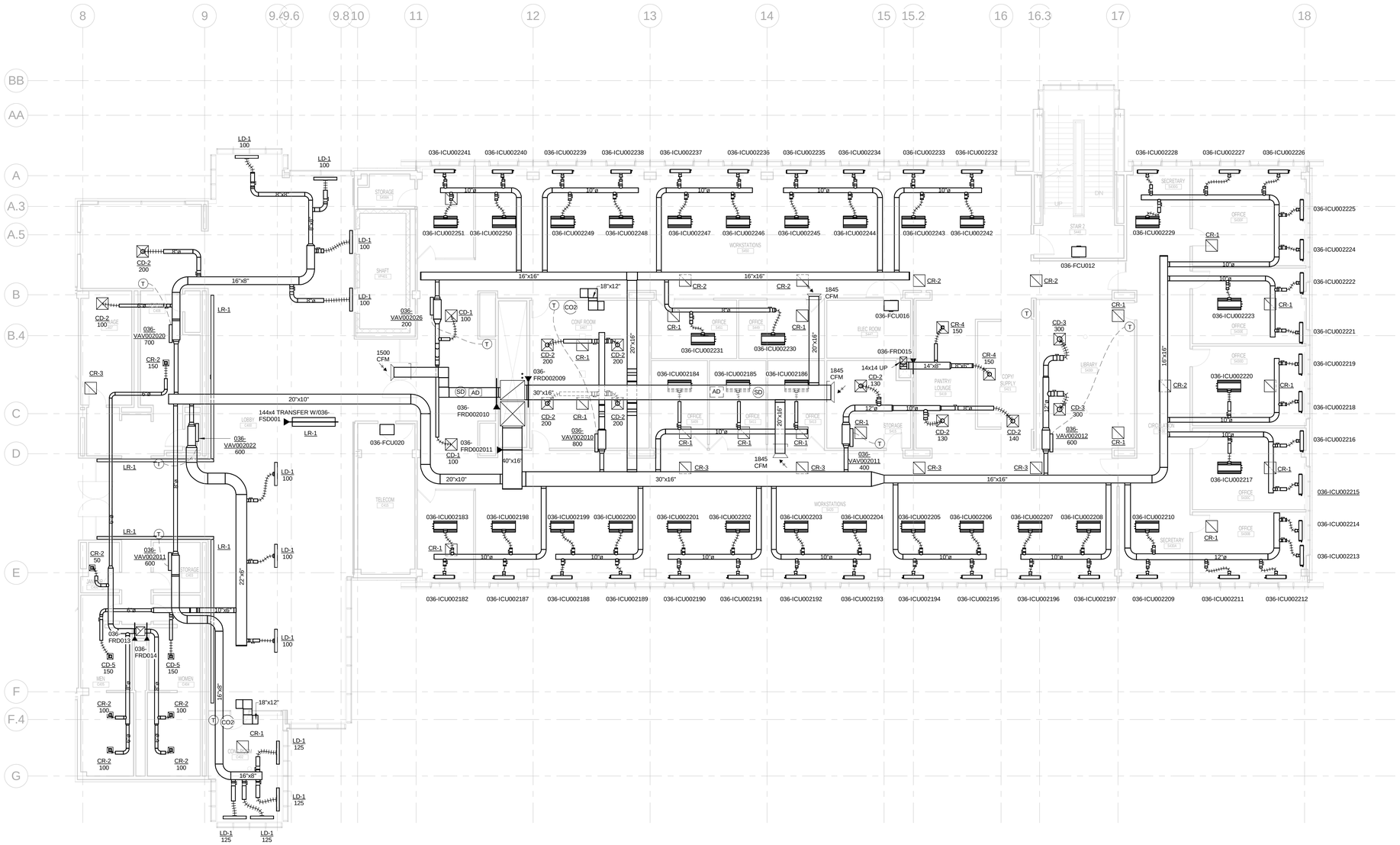

100% SUBMITTAL

NORTH

1/8"=1'-0" 8' 4' 0 8' 16'

AECOM

AECOM TECHNICAL SERVICES, INC.
3101 WILSON BOULEVARD
SUITE 900
ARLINGTON, VA 22201

T: 703-682-4900 F: 703.682.4901
www.aecom.com

SEAL AREA

STATE OF MARYLAND
PAUL WINTER SCHUTTER
No. 13027
REGISTERED
PROFESSIONAL ENGINEER

KEY PLAN

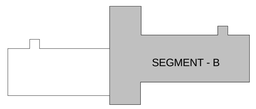

REV	DATE	DESCRIPTION	S&R BR.	CUSTOMER	PM	SECT. HEAD

	INITIALS	DATE
DRAWN BY	Designer	
CHECKED BY	PS	
A-E MANAGER	EW	
ENVIRONMENTAL BRANCH	JH	
SAFETY BRANCH	CS	
CM	MMD	
PM	RWP	
CUSTOMER	JWB	
ENG. BRANCH	DGL	

LEVEL 4 HVAC FLOOR PLAN - SEGMENT B

MH-104B

FLIGHT PROJECTS BUILDING

NATIONAL AERONAUTICS AND SPACE ADMINISTRATION

GODDARD SPACE FLIGHT CENTER GREENBELT, MARYLAND
FACILITIES MANAGEMENT DIVISION

DATE ISSUED	CoF CODE OR WR#	AECOM PROJECT NO.	SCALE
10/12/2012	12GXAZ	60187636	1/8" = 1'-0"

FILE DATE: 10/22/2012 12:32:24 PM

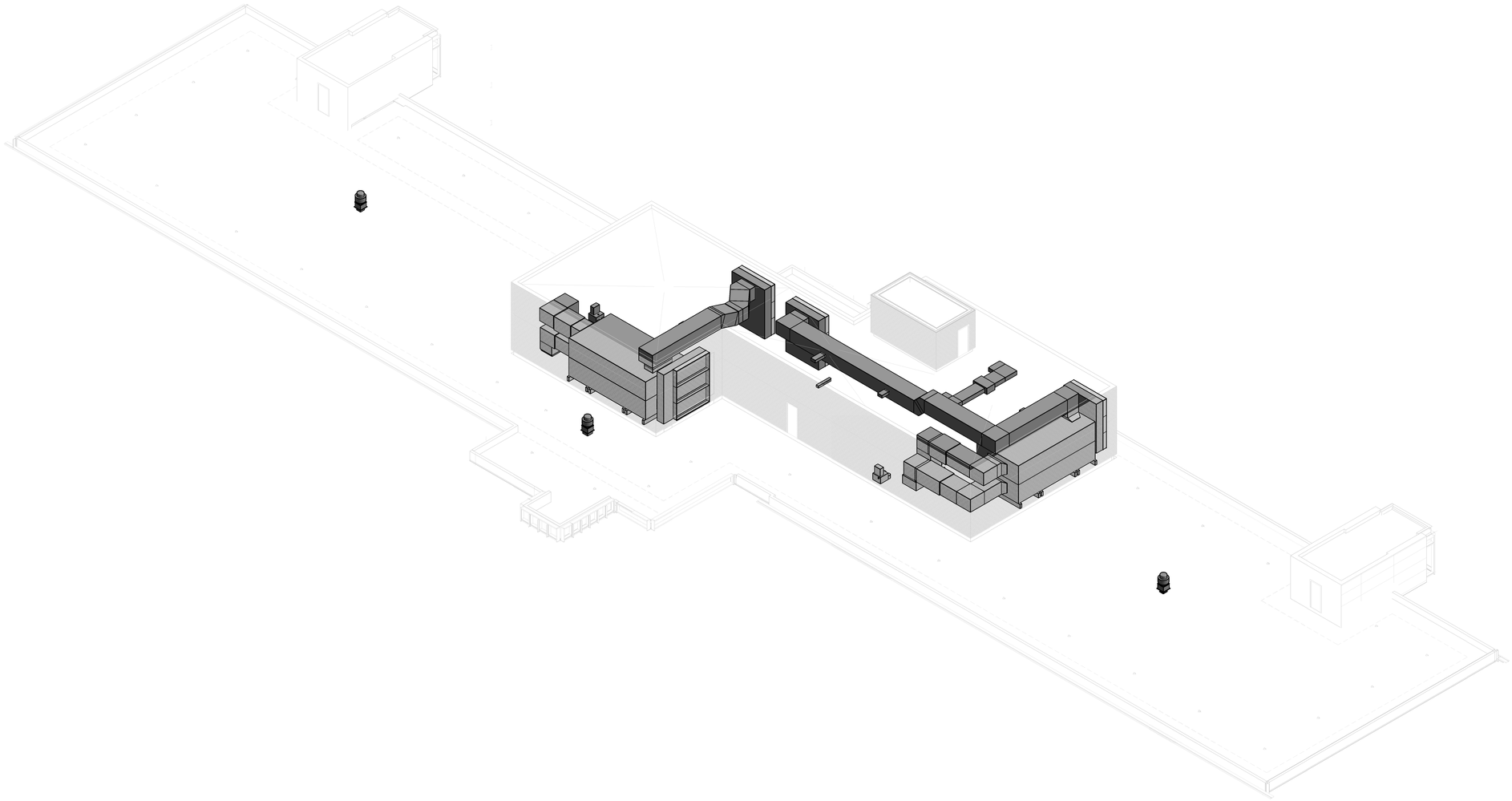

100% SUBMITTAL

NORTH

3/32"=1'-0" 8' 4' 0 12' 24'

AECOM

AECOM TECHNICAL SERVICES, INC.
3101 WILSON BOULEVARD
SUITE 900
ARLINGTON, VA 22201

T: 703-682-4900 F: 703.682.4901
www.aecom.com

SEAL AREA

STATE OF MARYLAND
PAUL MICHAEL SCHUTTE
No. 13276
REGISTERED PROFESSIONAL ENGINEER

KEY PLAN

REV	DATE	DESCRIPTION	S&R BR.	CUSTOMER	PM	SECT. HEAD

	INITIALS	DATE
DRAWN BY	Designer	
CHECKED BY	PS	
A-E MANAGER	EW	
ENVIRONMENTAL BRANCH	JH	
SAFETY BRANCH	CS	
CM	MMD	
PM	RWP	
CUSTOMER	JWB	
ENG. BRANCH	DGL	

PENTHOUSE 3D OVERVIEW HVAC

MH-105

FLIGHT PROJECTS BUILDING

NATIONAL AERONAUTICS AND SPACE ADMINISTRATION

GODDARD SPACE FLIGHT CENTER GREENBELT, MARYLAND
FACILITIES MANAGEMENT DIVISION

DATE ISSUED	CoF CODE OR WR#	AECOM PROJECT NO.	SCALE
10/12/2012	12GXAZ	60187636	

FILE DATE: 10/12/2012 9:31:08 AM

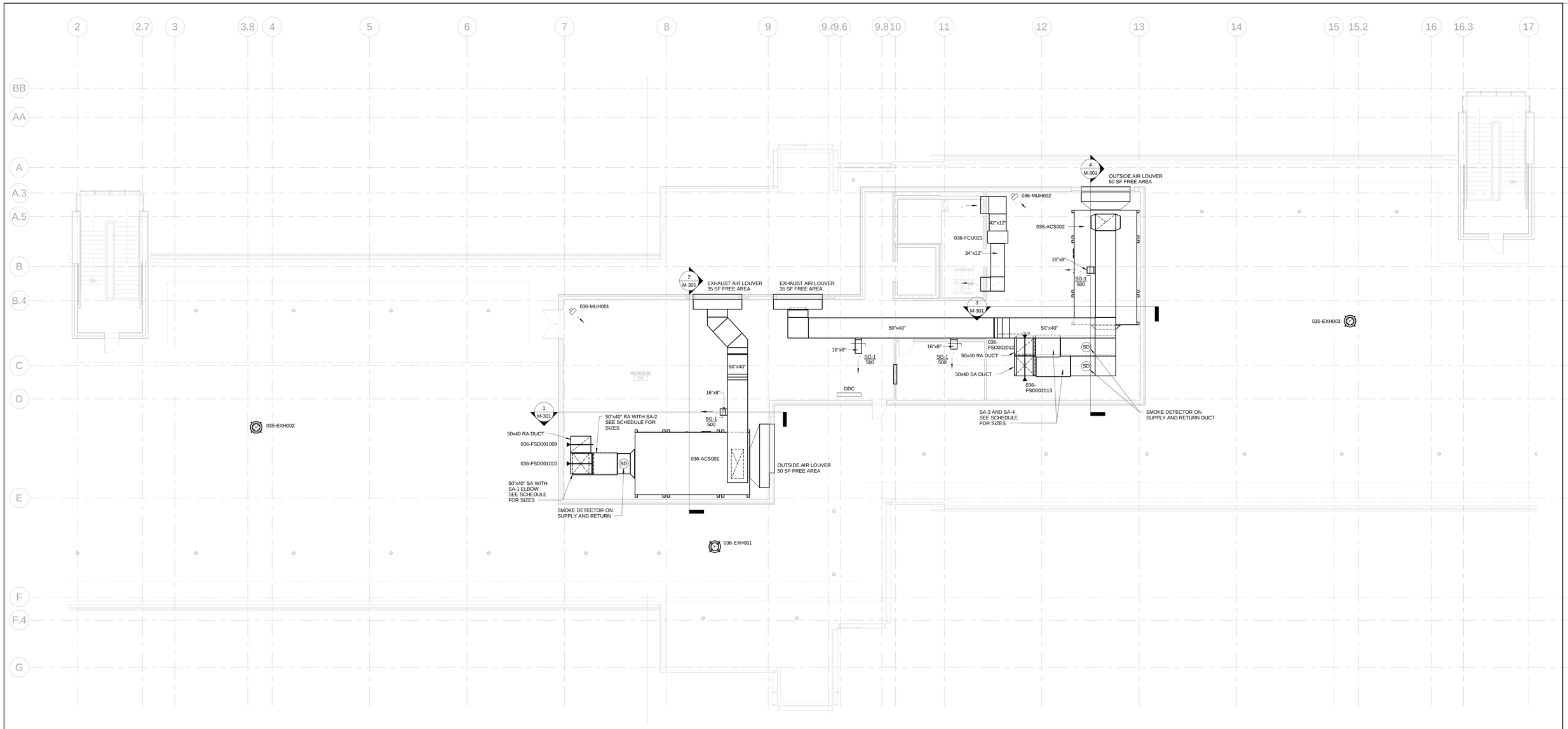

100% SUBMITTAL

NORTH

1/8"=1'-0" 8' 4' 0 8' 16'

AECOM

AECOM TECHNICAL SERVICES, INC.
3101 WILSON BOULEVARD
SUITE 900
ARLINGTON, VA 22201

T: 703-682-4900 F: 703.682.4901
www.aecom.com

SEAL AREA

STATE OF MARYLAND
PAUL WERNER SCHUTTER
No. 13276
REGISTERED
PROFESSIONAL ENGINEER

KEY PLAN

SEGMENT - A

REV	DATE	DESCRIPTION	S&R BR.	CUSTOMER	PM	SECT. HEAD

	INITIALS	DATE
DRAWN BY	Designer	
CHECKED BY	PS	
A-E MANAGER	EW	
ENVIRONMENTAL BRANCH	JH	
SAFETY BRANCH	CS	
CM	MMD	
PM	RWP	
CUSTOMER	JWB	
ENG. BRANCH	DGL	

PENTHOUSE HVAC FLOOR PLAN

MH-105A

FLIGHT PROJECTS BUILDING

NATIONAL AERONAUTICS AND SPACE ADMINISTRATION

GODDARD SPACE FLIGHT CENTER GREENBELT, MARYLAND
FACILITIES MANAGEMENT DIVISION

DATE ISSUED	CoF CODE OR WR#	AECOM PROJECT NO.	SCALE
10/12/2012	12GXAZ	60187636	1/8" = 1'-0"

FILE DATE: 10/22/2012 12:32:27 PM

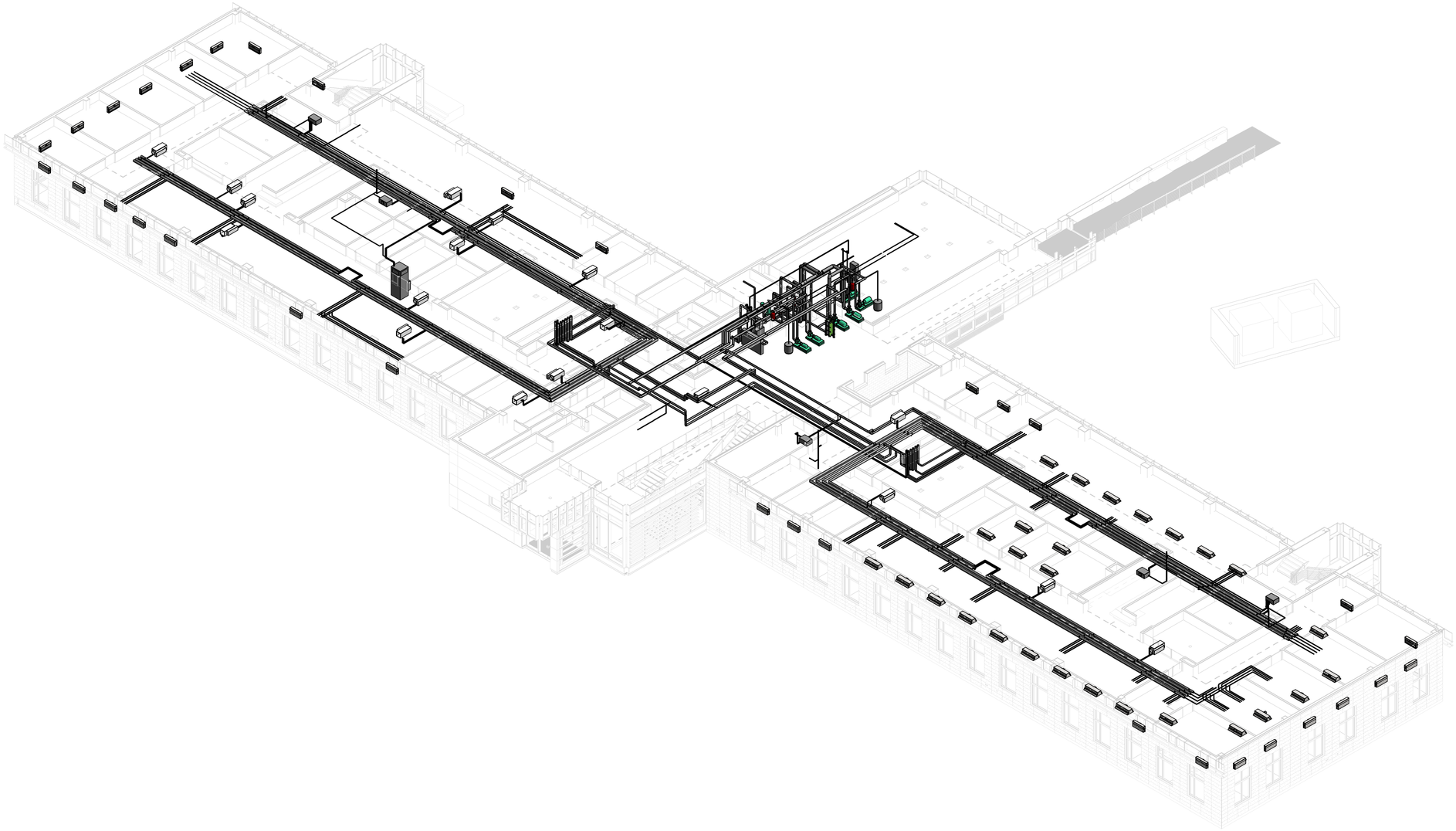

100% SUBMITTAL

NORTH

3/32"=1'-0" 8' 4' 0 12' 24'

AECOM

AECOM TECHNICAL SERVICES, INC.
3101 WILSON BOULEVARD
SUITE 900
ARLINGTON, VA 22201

T: 703-682-4900 F: 703.682.4901
www.aecom.com

SEAL AREA

STATE OF MARYLAND
PAUL SCHUYLER STANTON
No. 13276
REGISTERED
PROFESSIONAL ENGINEER

KEY PLAN

REV	DATE	DESCRIPTION	S&R BR.	CUSTOMER	PM	SECT. HEAD

	INITIALS	DATE
DRAWN BY	Designer	
CHECKED BY	PS	
A-E MANAGER	EW	
ENVIRONMENTAL BRANCH	JH	
SAFETY BRANCH	CS	
CM	MMD	
PM	RWP	
CUSTOMER	JWB	
ENG. BRANCH	DGL	

LEVEL 1 3D OVERVIEW PIPING

MP-101

FLIGHT PROJECTS BUILDING

NATIONAL AERONAUTICS AND SPACE ADMINISTRATION

GODDARD SPACE FLIGHT CENTER GREENBELT, MARYLAND
FACILITIES MANAGEMENT DIVISION

DATE ISSUED	CoF CODE OR WR#	AECOM PROJECT NO.	SCALE
10/12/2012	12GXAZ	60187636	

FILE DATE: 10/12/2012 9:31:52 AM

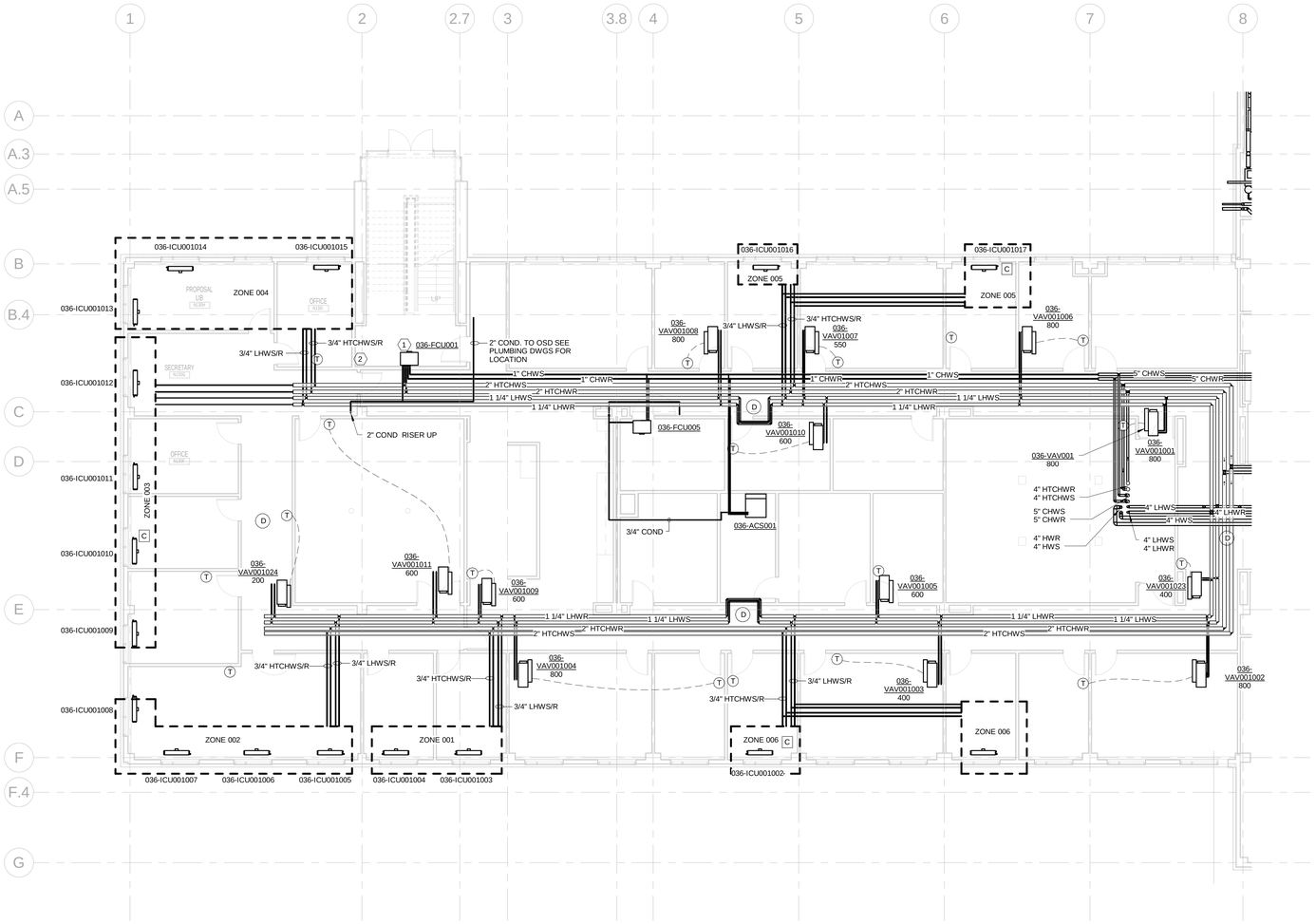

CONSTRUCTION NOTES:

1. INSTALL UNIT TIGHT TO SLAB ABOVE.
2. INSTALL CONDENSATE PUMP IN THE CEILING PLENUM OF THE CORRIDOR.

100% SUBMITTAL

NORTH

1/8"=1'-0" 8' 4' 0 8' 16'

AECOM

AECOM TECHNICAL SERVICES, INC.
3101 WILSON BOULEVARD
SUITE 900
ARLINGTON, VA 22201

T: 703-682-4900 F: 703.682.4901
www.aecom.com

SEAL AREA

STATE OF MARYLAND
PAUL WINFIELD STUTZMAN
No. 13276
REGISTERED PROFESSIONAL ENGINEER

KEY PLAN

SEGMENT - A

REV	DATE	DESCRIPTION	S&R BR.	CUSTOMER	PM	SECT. HEAD

	INITIALS	DATE
DRAWN BY	Designer	
CHECKED BY	PS	
A-E MANAGER	EW	
ENVIRONMENTAL BRANCH	JH	
SAFETY BRANCH	CS	
CM	MMD	
PM	RWP	
CUSTOMER	JWB	
ENG. BRANCH	DGL	

LEVEL 1 PIPING FLOOR PLAN - SEGMENT A

MP-101A

FLIGHT PROJECTS BUILDING

NATIONAL AERONAUTICS AND SPACE ADMINISTRATION

GODDARD SPACE FLIGHT CENTER GREENBELT, MARYLAND
FACILITIES MANAGEMENT DIVISION

DATE ISSUED	CoF CODE OR WR#	AECOM PROJECT NO.	SCALE
10/12/2012	12GXAZ	60187636	1/8" = 1'-0"

FILE DATE: 10/12/2012 9:31:58 AM

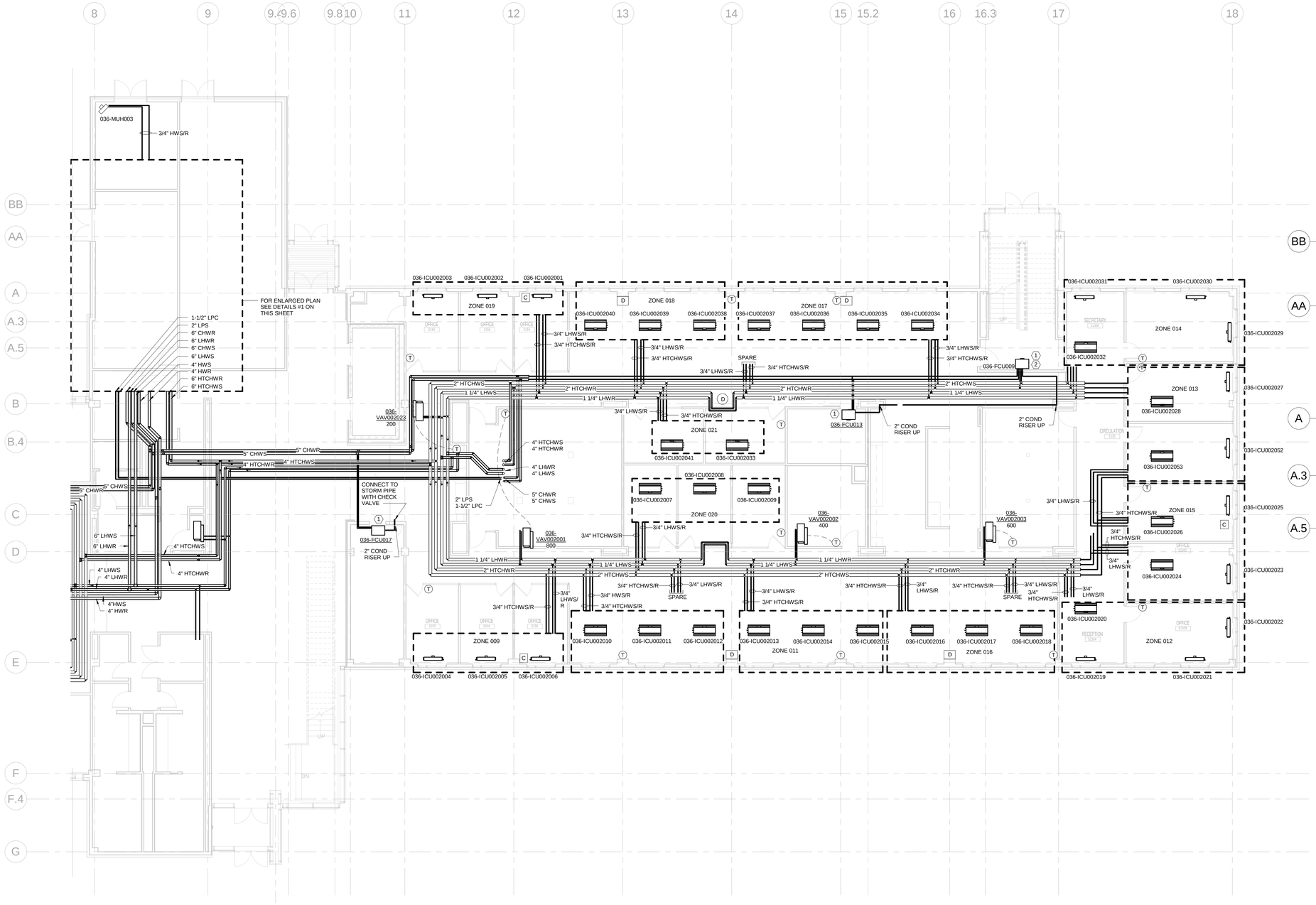

CONSTRUCTION NOTES:

1. INSTALL UNIT TIGHT TO SLAB ABOVE.
2. INSTALL CONDENSATE PUMP IN THE CEILING PLENUM OF THE CORRIDOR.

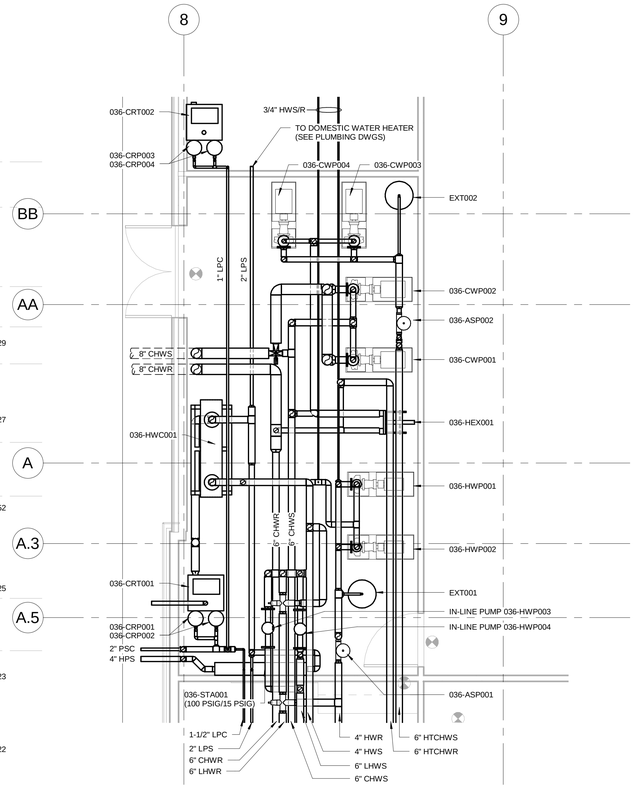

#1 ENLARGED PART PLAN - PUMP ROOM HVAC AND PIPING

FROM SHEET MP-101B

100% SUBMITTAL

NORTH

1/8"=1'-0" 8' 4' 0 8' 16'

AECOM

AECOM TECHNICAL SERVICES, INC.
3101 WILSON BOULEVARD
SUITE 900
ARLINGTON, VA 22201

T: 703-682-4900 F: 703.682.4901
www.aecom.com

SEAL AREA

STATE OF MARYLAND PAUL SHIRLEY STEWART No. 13276 REGISTERED PROFESSIONAL ENGINEER

KEY PLAN

SEGMENT - B

REV	DATE	DESCRIPTION	S&R BR.	CUSTOMER	PM	SECT. HEAD

	INITIALS	DATE
DRAWN BY	Designer	
CHECKED BY	PS	
A-E MANAGER	EW	
ENVIRONMENTAL BRANCH	JH	
SAFETY BRANCH	CS	
CM	MMD	
PM	RWP	
CUSTOMER	JWB	
ENG. BRANCH	DGL	

LEVEL 1 PIPING FLOOR PLAN - SEGMENT B

MP-101B

FLIGHT PROJECTS BUILDING

NATIONAL AERONAUTICS AND SPACE ADMINISTRATION

GODDARD SPACE FLIGHT CENTER GREENBELT, MARYLAND
FACILITIES MANAGEMENT DIVISION

DATE ISSUED	CoF CODE OR WR#	AECOM PROJECT NO.	SCALE
10/12/2012	12GXAZ	60187636	As indicated

FILE DATE: 10/12/2012 9:32:0 / AM

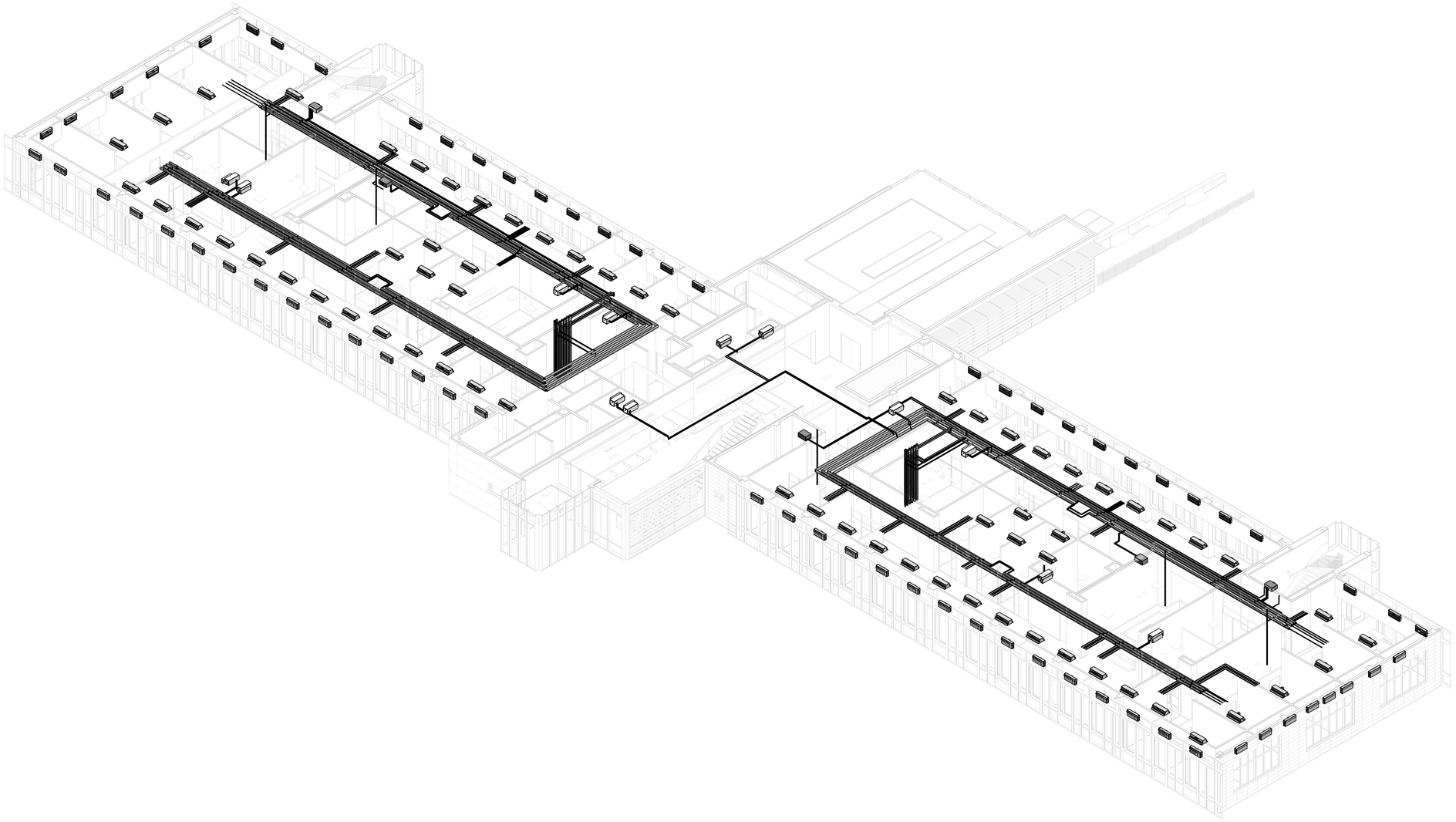

100% SUBMITTAL

NORTH

3/32"=1'-0" 8' 4' 0 12' 24'

AECOM

AECOM TECHNICAL SERVICES, INC.
3101 WILSON BOULEVARD
SUITE 900
ARLINGTON, VA 22201

T: 703-682-4900 F: 703.682.4901
www.aecom.com

SEAL AREA

STATE OF MARYLAND
PAUL ANDREW GARRITY
No. 13276
REGISTERED PROFESSIONAL ENGINEER

KEY PLAN

REV	DATE	DESCRIPTION	S&R BR.	CUSTOMER	PM	SECT. HEAD

	INITIALS	DATE
DRAWN BY	Designer	
CHECKED BY	PS	
A-E MANAGER	EW	
ENVIRONMENTAL BRANCH	JH	
SAFETY BRANCH	CS	
CM	MMD	
PM	RWP	
CUSTOMER	JWB	
ENG. BRANCH	DGL	

LEVEL 2 3D OVERVIEW PIPING

MP-102

FLIGHT PROJECTS BUILDING

NATIONAL AERONAUTICS AND SPACE ADMINISTRATION

GODDARD SPACE FLIGHT CENTER GREENBELT, MARYLAND
FACILITIES MANAGEMENT DIVISION

DATE ISSUED	CoF CODE OR WR#	AECOM PROJECT NO.	SCALE
10/12/2012	12GXAZ	60187636	

FILE DATE: 10/12/2012 9:32:40 AM

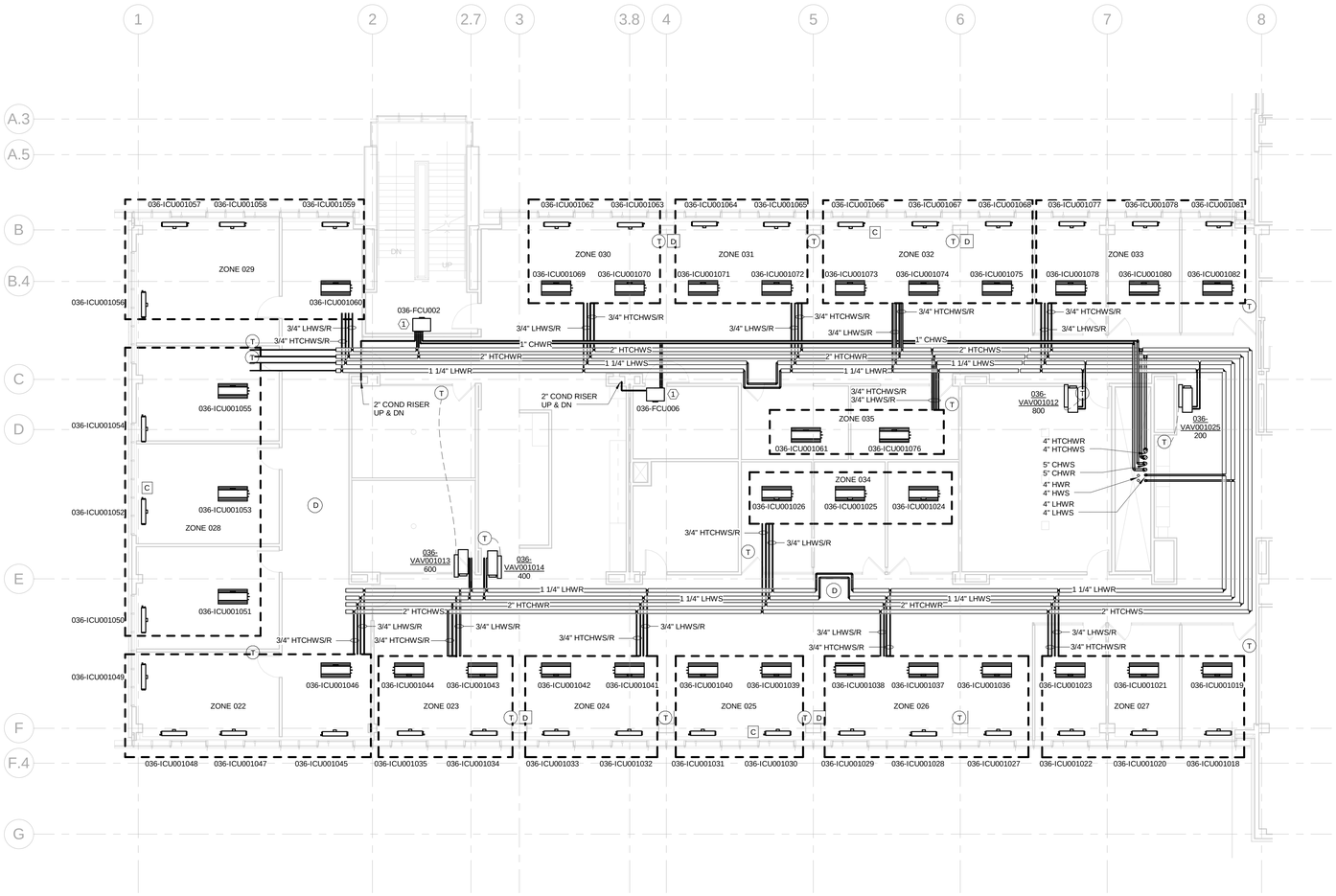

CONSTRUCTION NOTES:

1. INSTALL UNIT TIGHT TO SLAB ABOVE.

100% SUBMITTAL

NORTH

1/8"=1'-0" 8' 4' 0 8' 16'

AECOM

AECOM TECHNICAL SERVICES, INC.
3101 WILSON BOULEVARD
SUITE 900
ARLINGTON, VA 22201

T: 703-682-4900 F: 703.682.4901
www.aecom.com

SEAL AREA

STATE OF MARYLAND
PAUL SUMNER STANTON
No. 13276
PROFESSIONAL ENGINEER

KEY PLAN

SEGMENT - A

REV	DATE	DESCRIPTION	S&R BR.	CUSTOMER	PM	SECT. HEAD

	INITIALS	DATE
DRAWN BY	Designer	
CHECKED BY	PS	
A-E MANAGER	EW	
ENVIRONMENTAL BRANCH	JH	
SAFETY BRANCH	CS	
CM	MMD	
PM	RWP	
CUSTOMER	JWB	
ENG. BRANCH	DGL	

LEVEL 2 PIPING FLOOR PLAN - SEGMENT A

MP-102A

FLIGHT PROJECTS BUILDING

NATIONAL AERONAUTICS AND SPACE ADMINISTRATION

GODDARD SPACE FLIGHT CENTER GREENBELT, MARYLAND
FACILITIES MANAGEMENT DIVISION

DATE ISSUED	CoF CODE OR WR#	AECOM PROJECT NO.	SCALE
10/12/2012	12GXAZ	60187636	1/8" = 1'-0"

FILE DATE: 10/12/2012 9:32:4s AM

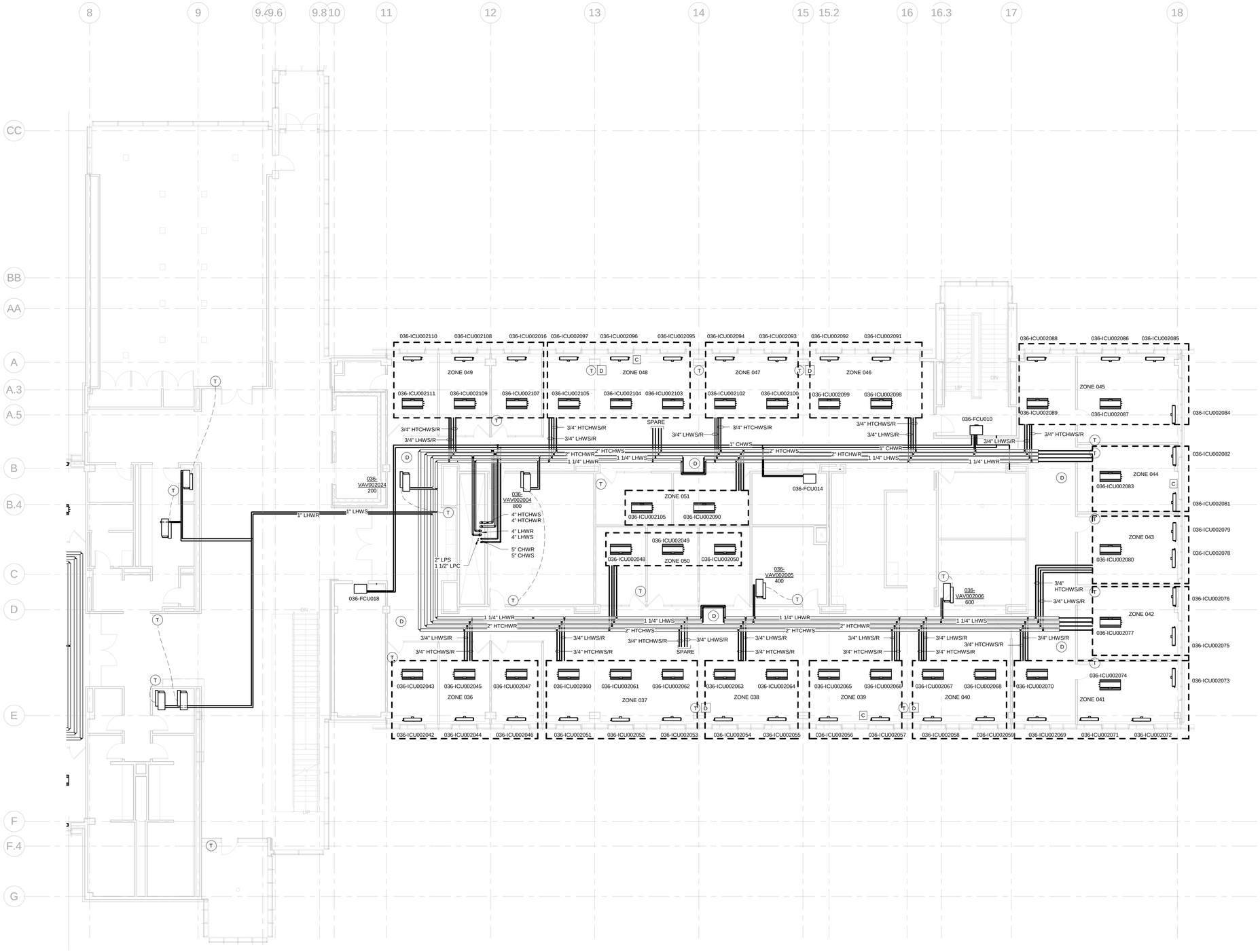

CONSTRUCTION NOTES:

1. INSTALL UNIT TIGHT TO SLAB ABOVE

100% SUBMITTAL

NORTH

1/8"=1'-0" 8' 4' 0 8' 16'

AECOM

AECOM TECHNICAL SERVICES, INC.
3101 WILSON BOULEVARD
SUITE 900
ARLINGTON, VA 22201

T: 703-682-4900 F: 703.682.4901
www.aecom.com

SEAL AREA

STATE OF MARYLAND
PAUL HERMAN HAUPT
No. 13275
REGISTERED
PROFESSIONAL ENGINEER

KEY PLAN

SEGMENT - B

REV	DATE	DESCRIPTION	S&R BR.	CUSTOMER	PM	SECT. HEAD

	INITIALS	DATE
DRAWN BY	Designer	
CHECKED BY	PS	
A-E MANAGER	EW	
ENVIRONMENTAL BRANCH	JH	
SAFETY BRANCH	CS	
CM	MMD	
PM	RWP	
CUSTOMER	JWB	
ENG. BRANCH	DGL	

LEVEL 2 PIPING FLOOR PLAN - SEGMENT B

MP-102B

FLIGHT PROJECTS BUILDING

NATIONAL AERONAUTICS AND SPACE ADMINISTRATION

GODDARD SPACE FLIGHT CENTER GREENBELT, MARYLAND
FACILITIES MANAGEMENT DIVISION

DATE ISSUED	CoF CODE OR WR#	AECOM PROJECT NO.	SCALE
10/12/2012	12GXAZ	60187636	1/8" = 1'-0"

FILE DATE: 10/12/2012 9:32:54 AM

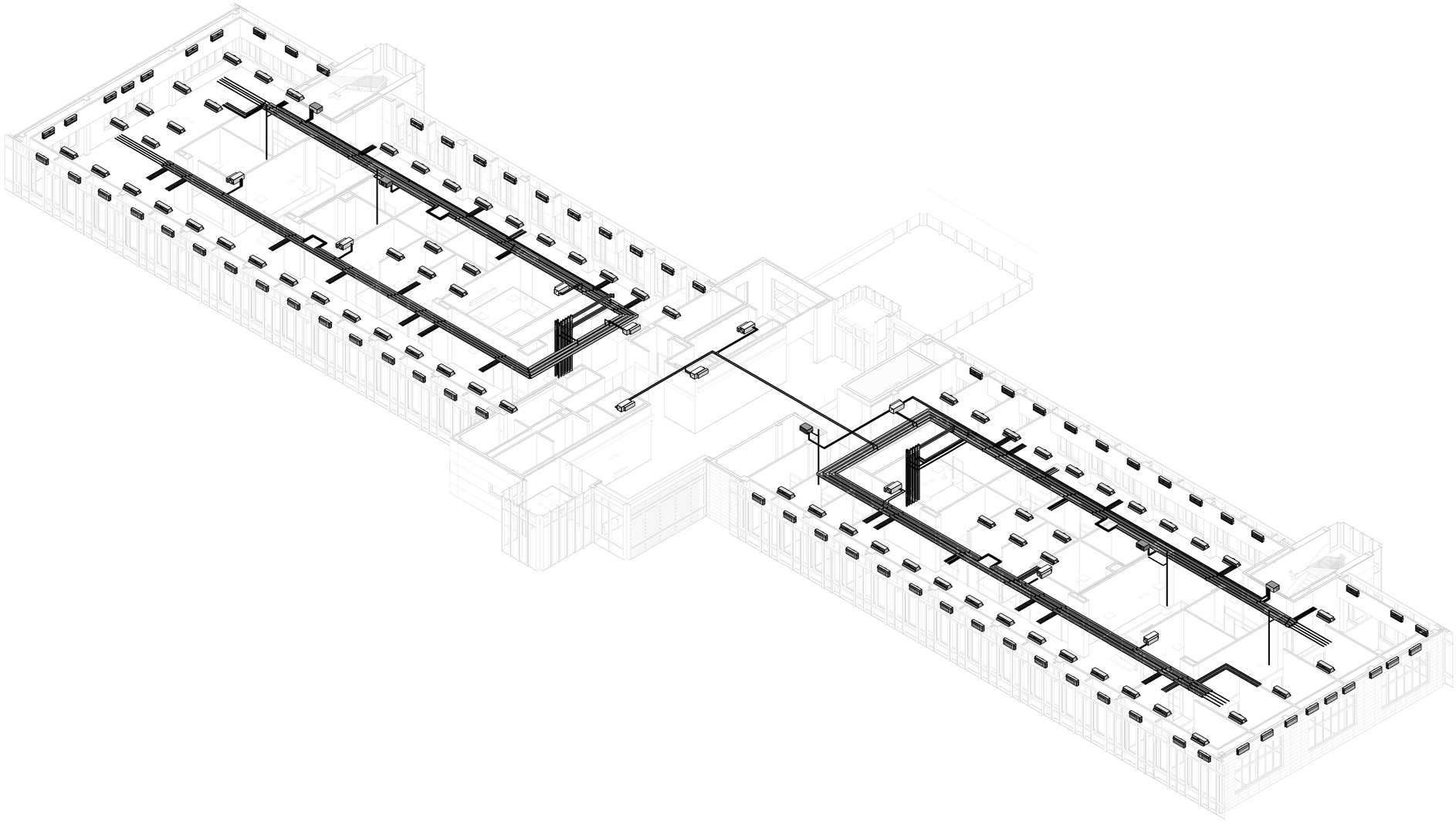

100% SUBMITTAL

NORTH

3/32"=1'-0" 8' 4' 0 12' 24'

AECOM

AECOM TECHNICAL SERVICES, INC.
3101 WILSON BOULEVARD
SUITE 900
ARLINGTON, VA 22201

T: 703-682-4900 F: 703.682.4901
www.aecom.com

SEAL AREA

STATE OF MARYLAND
PAUL SCHLATTERER
No. 13828
REGISTERED
PROFESSIONAL ENGINEER

KEY PLAN

REV	DATE	DESCRIPTION	S&R BR.	CUSTOMER	PM	SECT. HEAD

	INITIALS	DATE
DRAWN BY	Designer	
CHECKED BY	PS	
A-E MANAGER	EW	
ENVIRONMENTAL BRANCH	JH	
SAFETY BRANCH	CS	
CM	MMD	
PM	RWP	
CUSTOMER	JWB	
ENG. BRANCH	DGL	

LEVEL 3 3D OVERVIEW PIPING

MP-103

FLIGHT PROJECTS BUILDING

NATIONAL AERONAUTICS AND SPACE ADMINISTRATION

GODDARD SPACE FLIGHT CENTER GREENBELT, MARYLAND
FACILITIES MANAGEMENT DIVISION

DATE ISSUED	CoF CODE OR WR#	AECOM PROJECT NO.	SCALE
10/12/2012	12GXAZ	60187636	

FILE DATE: 10/12/2012 9:33:23 AM

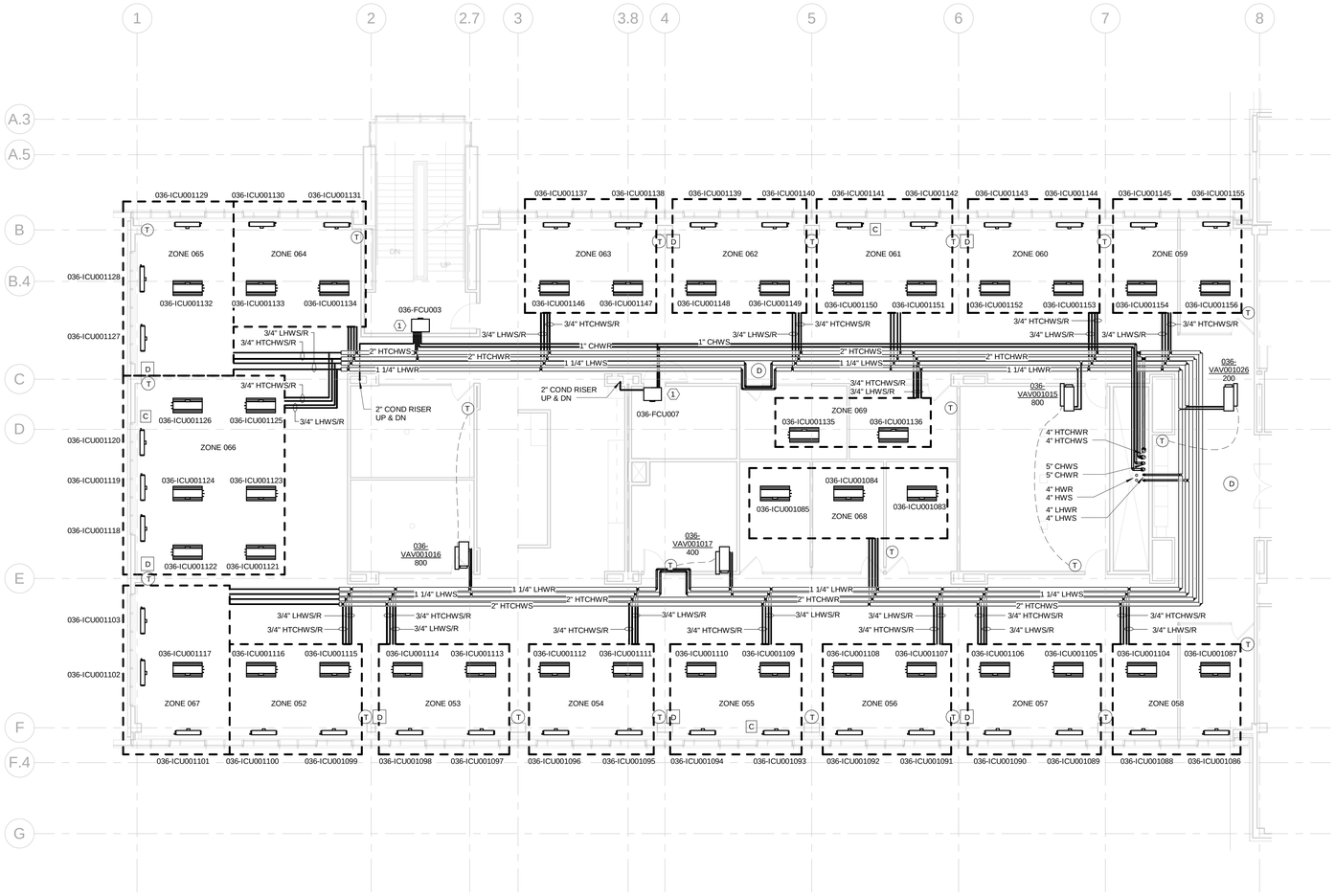

100% SUBMITTAL

NORTH

1/8"=1'-0" 8' 4' 0 8' 16'

AECOM

AECOM TECHNICAL SERVICES, INC.
3101 WILSON BOULEVARD
SUITE 900
ARLINGTON, VA 22201

T: 703-682-4900 F: 703.682.4901
www.aecom.com

SEAL AREA

STATE OF MARYLAND
PAUL SUMNER STANTON
No. 13276
PROFESSIONAL ENGINEER

KEY PLAN

SEGMENT - A

REV	DATE	DESCRIPTION	S&R BR.	CUSTOMER	PM	SECT. HEAD

	INITIALS	DATE
DRAWN BY	Designer	
CHECKED BY	PS	
A-E MANAGER	EW	
ENVIRONMENTAL BRANCH	JH	
SAFETY BRANCH	CS	
CM	MMD	
PM	RWP	
CUSTOMER	JWB	
ENG. BRANCH	DGL	

LEVEL 3 PIPING FLOOR PLAN - SEGMENT A

MP-103A

FLIGHT PROJECTS BUILDING

NATIONAL AERONAUTICS AND SPACE ADMINISTRATION

GODDARD SPACE FLIGHT CENTER GREENBELT, MARYLAND
FACILITIES MANAGEMENT DIVISION

DATE ISSUED	CoF CODE OR WR#	AECOM PROJECT NO.	SCALE
10/12/2012	12GXAZ	60187636	1/8" = 1'-0"

FILE DATE: 10/12/2012 9:33:29 AM

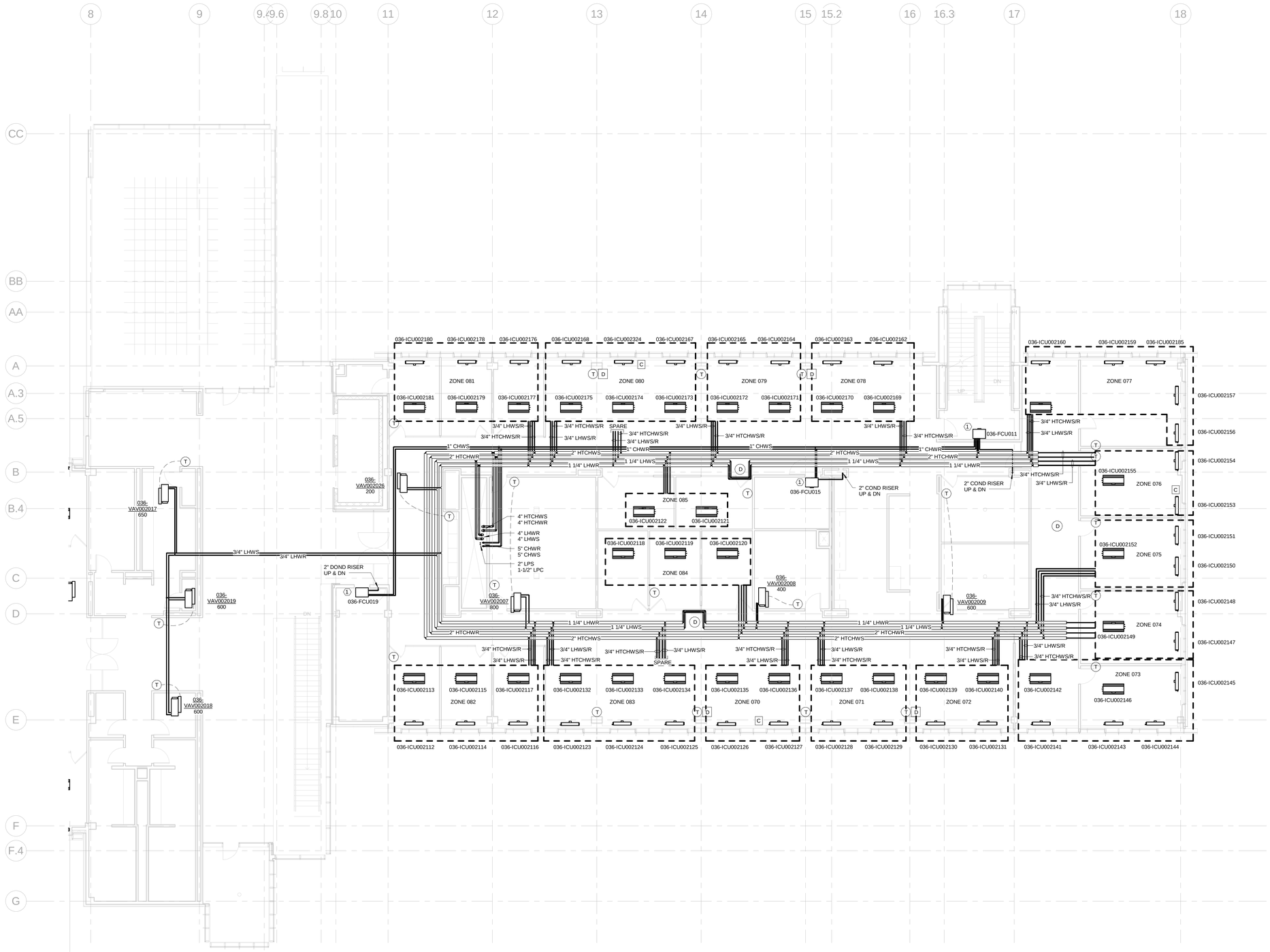

CONSTRUCTION NOTES:

1. INSTALL UNIT TIGHT TO SLAB ABOVE.

100% SUBMITTAL

NORTH

1/8"=1'-0" 8' 4' 0 8' 16'

AECOM

AECOM TECHNICAL SERVICES, INC.
3101 WILSON BOULEVARD
SUITE 900
ARLINGTON, VA 22201

T: 703-682-4900 F: 703.682.4901
www.aecom.com

SEAL AREA

STATE OF MARYLAND
PAUL DENNIS STEVENS
No. 13828
REGISTERED PROFESSIONAL ENGINEER

KEY PLAN

SEGMENT - B

REV	DATE	DESCRIPTION	S&R BR.	CUSTOMER	PM	SECT. HEAD

	INITIALS	DATE
DRAWN BY	Designer	
CHECKED BY	PS	
A-E MANAGER	EW	
ENVIRONMENTAL BRANCH	JH	
SAFETY BRANCH	CS	
CM	MMD	
PM	RWP	
CUSTOMER	JWB	
ENG. BRANCH	DGL	

LEVEL 3 PIPING FLOOR PLAN - SEGMENT B

MP-103B

FLIGHT PROJECTS BUILDING

NATIONAL AERONAUTICS AND SPACE ADMINISTRATION

GODDARD SPACE FLIGHT CENTER GREENBELT, MARYLAND
FACILITIES MANAGEMENT DIVISION

DATE ISSUED	CoF CODE OR WR#	AECOM PROJECT NO.	SCALE
10/12/2012	12GXAZ	60187636	1/8" = 1'-0"

FILE DATE: 10/12/2012 9:33:35 AM

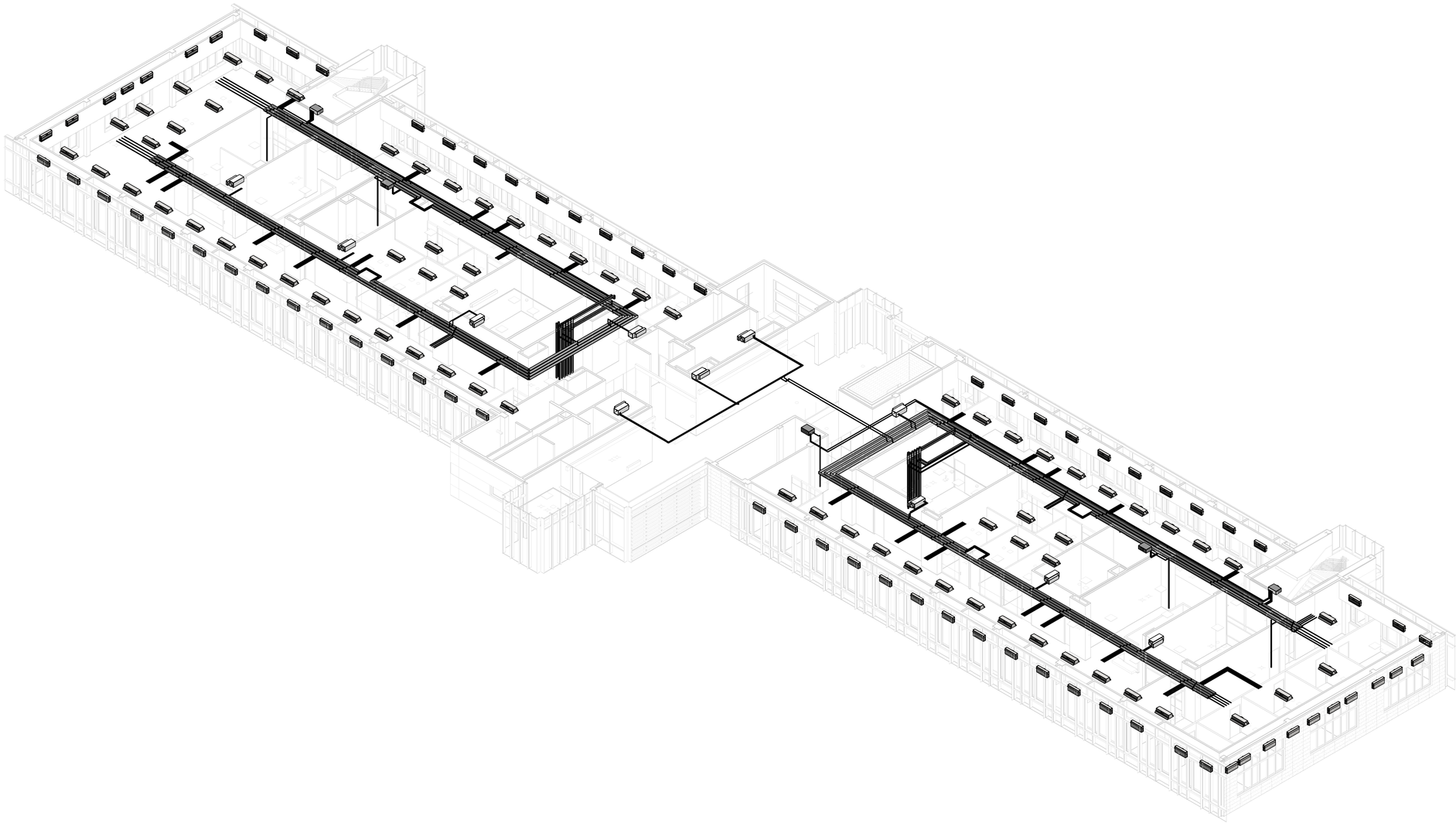

100% SUBMITTAL

NORTH

3/32"=1'-0" 8' 4' 0 12' 24'

AECOM

AECOM TECHNICAL SERVICES, INC.
3101 WILSON BOULEVARD
SUITE 900
ARLINGTON, VA 22201

T: 703-682-4900 F: 703.682.4901
www.aecom.com

SEAL AREA

STATE OF MARYLAND
PAUL JOHN BERTHOLF
No. 13276
REGISTERED
PROFESSIONAL ENGINEER

KEY PLAN

REV	DATE	DESCRIPTION	S&R BR.	CUSTOMER	PM	SECT. HEAD

	INITIALS	DATE
DRAWN BY	Designer	
CHECKED BY	PS	
A-E MANAGER	EW	
ENVIRONMENTAL BRANCH	JH	
SAFETY BRANCH	CS	
CM	MMD	
PM	RWP	
CUSTOMER	JWB	
ENG. BRANCH	DGL	

LEVEL 4 3D OVERVIEW PIPING

MP-104

FLIGHT PROJECTS BUILDING

NATIONAL AERONAUTICS AND SPACE ADMINISTRATION

GODDARD SPACE FLIGHT CENTER GREENBELT, MARYLAND
FACILITIES MANAGEMENT DIVISION

DATE ISSUED	CoF CODE OR WR#	AECOM PROJECT NO.	SCALE
10/12/2012	12GXAZ	60187636	

FILE DATE: 10/12/2012 9:34:08 AM

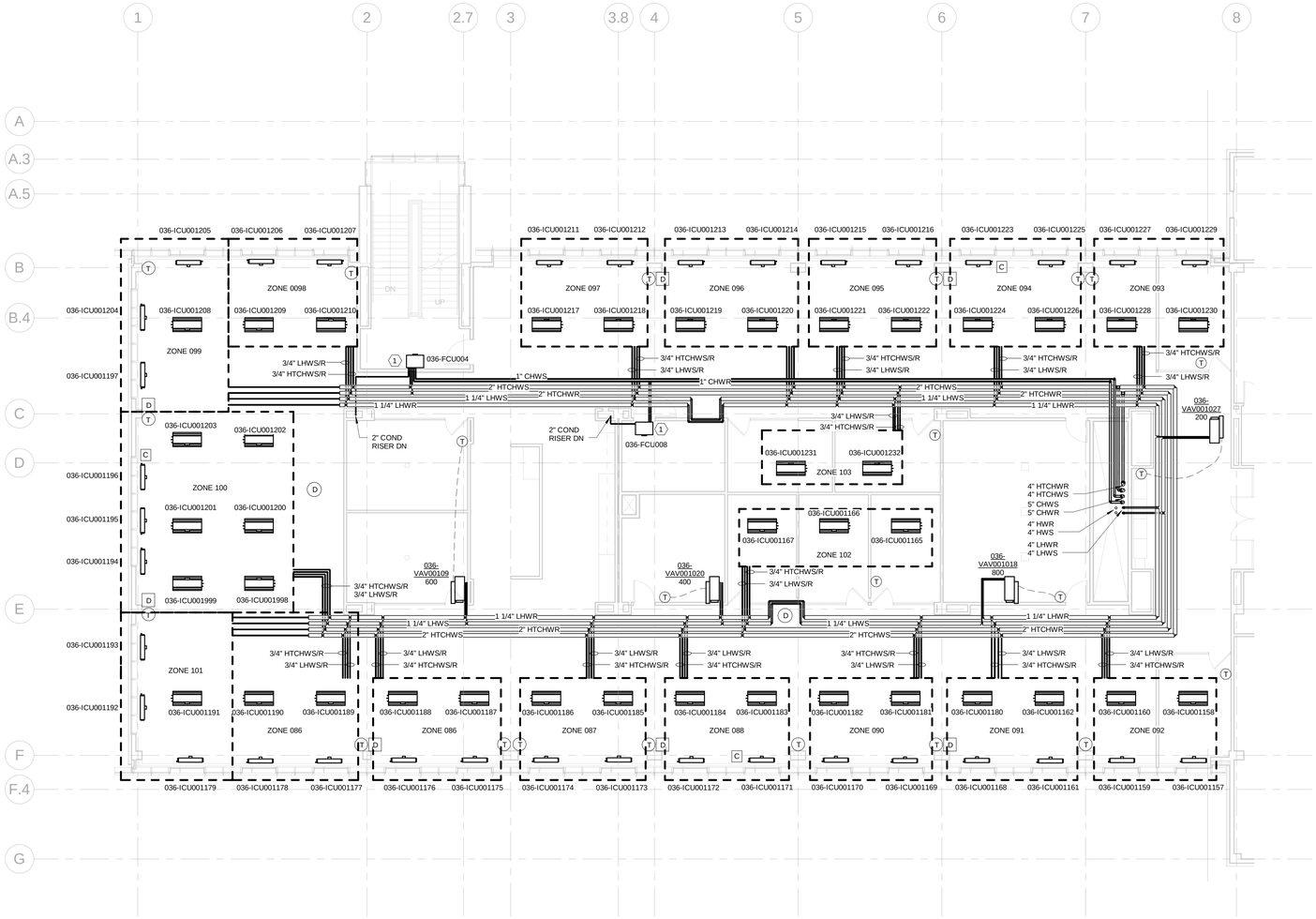

CONSTRUCTION NOTES:

1. INSTALL UNIT TIGHT TO SLAB ABOVE.

100% SUBMITTAL

NORTH

1/8"=1'-0" 8' 4' 0 8' 16'

AECOM

AECOM TECHNICAL SERVICES, INC.
3101 WILSON BOULEVARD
SUITE 900
ARLINGTON, VA 22201

T: 703-682-4900 F: 703.682.4901
www.aecom.com

SEAL AREA

STATE OF MARYLAND
PAUL SCHOTTLAND
No. 13276
REGISTERED PROFESSIONAL ENGINEER

KEY PLAN

SEGMENT - A

REV	DATE	DESCRIPTION	S&R BR.	CUSTOMER	PM	SECT. HEAD

	INITIALS	DATE
DRAWN BY	Designer	
CHECKED BY	PS	
A-E MANAGER	EW	
ENVIRONMENTAL BRANCH	JH	
SAFETY BRANCH	CS	
CM	MMD	
PM	RWP	
CUSTOMER	JWB	
ENG. BRANCH	DGL	

LEVEL 4 PIPING FLOOR PLAN - SEGMENT A

MP-104A

FLIGHT PROJECTS BUILDING

NATIONAL AERONAUTICS AND SPACE ADMINISTRATION

GODDARD SPACE FLIGHT CENTER GREENBELT, MARYLAND
FACILITIES MANAGEMENT DIVISION

DATE ISSUED	CoF CODE OR WR#	AECOM PROJECT NO.	SCALE
10/12/2012	12GXAZ	60187636	1/8" = 1'-0"

FILE DATE: 10/12/2012 9:34:13 AM

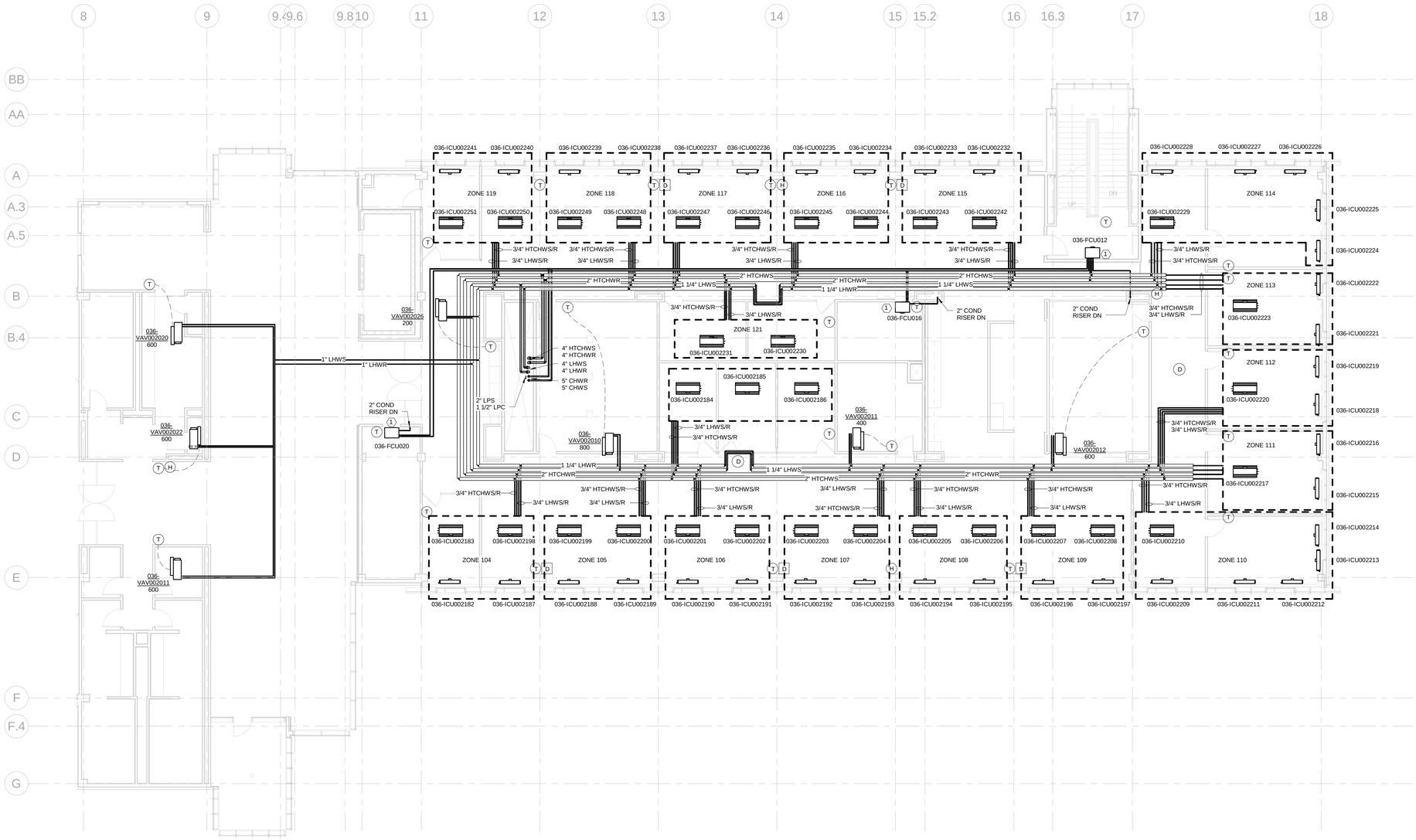

CONSTRUCTION NOTES:

1. INSTALL UNIT TIGHT TO SLAB ABOVE.

100% SUBMITTAL

NORTH

1/8"=1'-0" 8' 4' 0 8' 16'

AECOM

AECOM TECHNICAL SERVICES, INC.
3101 WILSON BOULEVARD
SUITE 900
ARLINGTON, VA 22201

T: 703-682-4900 F: 703.682.4901
www.aecom.com

SEAL AREA

STATE OF MARYLAND
PAUL SUMNER STANTON
No. 13276
REGISTERED PROFESSIONAL ENGINEER

KEY PLAN

SEGMENT - B

REV	DATE	DESCRIPTION	S&R BR.	CUSTOMER	PM	SECT. HEAD

	INITIALS	DATE
DRAWN BY	Designer	
CHECKED BY	PS	
A-E MANAGER	EW	
ENVIRONMENTAL BRANCH	JH	
SAFETY BRANCH	CS	
CM	MMD	
PM	RWP	
CUSTOMER	JWB	
ENG. BRANCH	DGL	

LEVEL 4 PIPING FLOOR PLAN - SEGMENT B

MP-104B

FLIGHT PROJECTS BUILDING

NATIONAL AERONAUTICS AND SPACE ADMINISTRATION

GODDARD SPACE FLIGHT CENTER GREENBELT, MARYLAND
FACILITIES MANAGEMENT DIVISION

DATE ISSUED	CoF CODE OR WR#	AECOM PROJECT NO.	SCALE
10/12/2012	12GXAZ	60187636	1/8" = 1'-0"

FILE DATE: 10/12/2012 9:34:21 AM

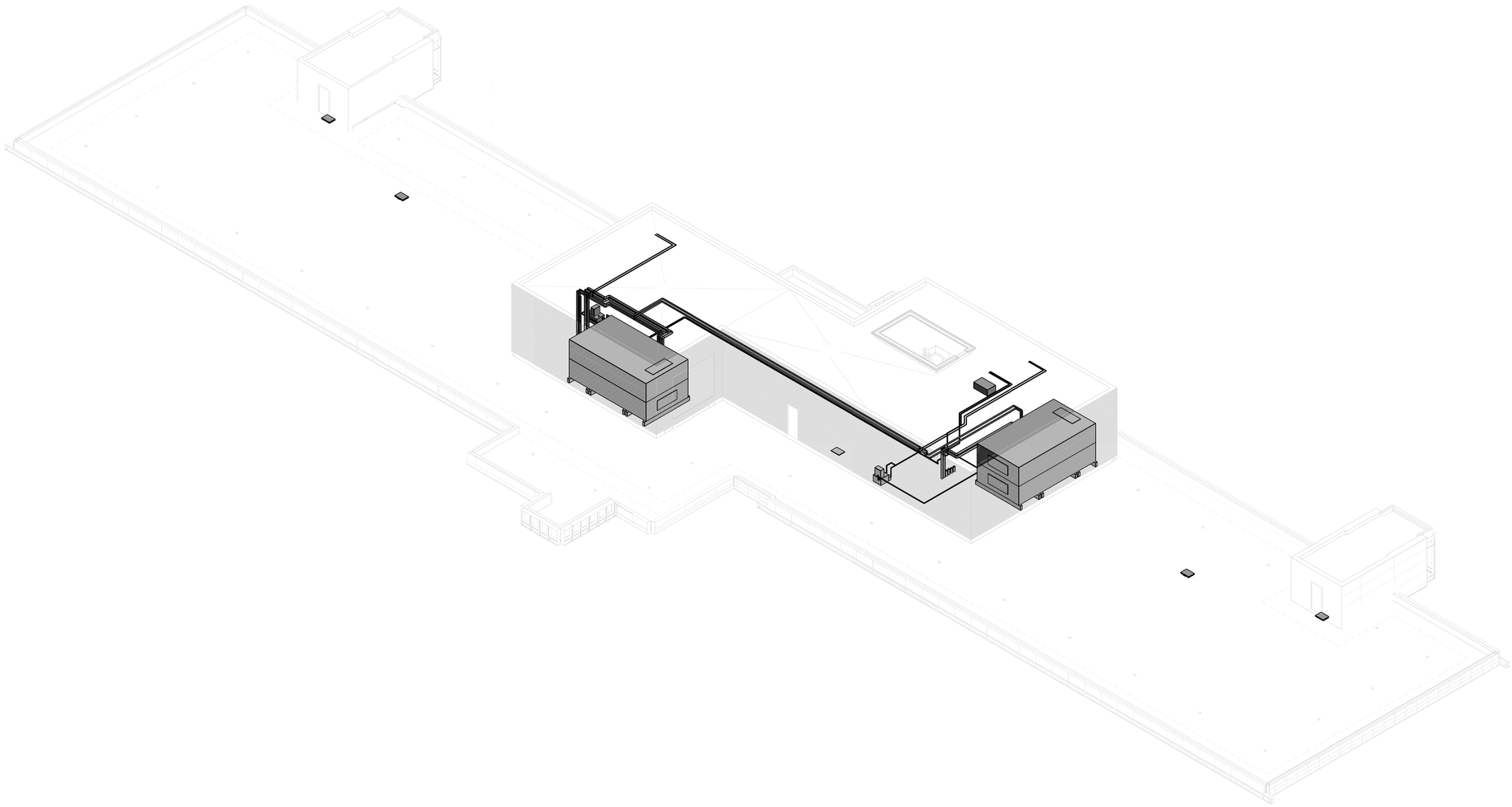

100% SUBMITTAL

NORTH

3/32"=1'-0" 8' 4' 0 12' 24'

AECOM

AECOM TECHNICAL SERVICES, INC.
3101 WILSON BOULEVARD
SUITE 900
ARLINGTON, VA 22201

T: 703-682-4900 F: 703.682.4901
www.aecom.com

SEAL AREA

STATE OF MARYLAND
PAUL SUMNER STANTON
No. 13276
SEPTEMBER 11, 2012
PROFESSIONAL ENGINEER

KEY PLAN

REV	DATE	DESCRIPTION	S&R BR.	CUSTOMER	PM	SECT. HEAD

	INITIALS	DATE
DRAWN BY	Designer	
CHECKED BY	PS	
A-E MANAGER	EW	
ENVIRONMENTAL BRANCH	JH	
SAFETY BRANCH	CS	
CM	MMD	
PM	RWP	
CUSTOMER	JWB	
ENG. BRANCH	DGL	

PENTHOUSE 3D OVERVIEW PIPING

MP-105

FLIGHT PROJECTS BUILDING

NATIONAL AERONAUTICS AND SPACE ADMINISTRATION

GODDARD SPACE FLIGHT CENTER GREENBELT, MARYLAND
FACILITIES MANAGEMENT DIVISION

DATE ISSUED	CoF CODE OR WR#	AECOM PROJECT NO.	SCALE
10/12/2012	12GXAZ	60187636	

FILE DATE: 10/12/2012 9:34:45 AM

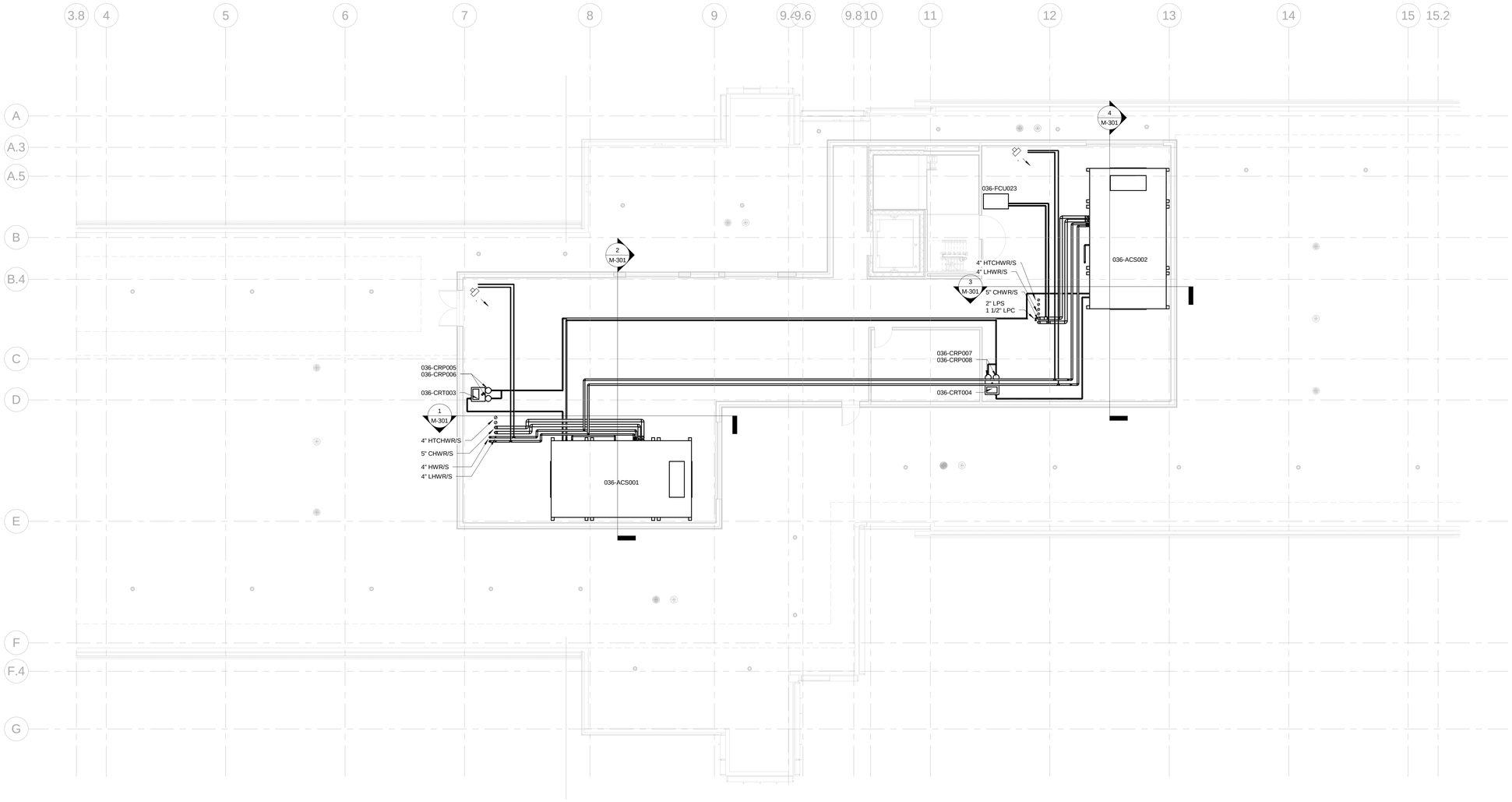

100% SUBMITTAL

NORTH

1/8"=1'-0" 8' 4' 0 8' 16'

AECOM

AECOM TECHNICAL SERVICES, INC.
3101 WILSON BOULEVARD
SUITE 900
ARLINGTON, VA 22201

T: 703-682-4900 F: 703.682.4901
www.aecom.com

SEAL AREA

STATE OF MARYLAND
PAUL SCHOTTLAND
No. 13826
REGISTERED
PROFESSIONAL ENGINEER

KEY PLAN

SEGMENT - A

REV	DATE	DESCRIPTION	S&R BR.	CUSTOMER	PM	SECT. HEAD

	INITIALS	DATE
DRAWN BY	Designer	
CHECKED BY	PS	
A-E MANAGER	EW	
ENVIRONMENTAL BRANCH	JH	
SAFETY BRANCH	CS	
CM	MMD	
PM	RWP	
CUSTOMER	JWB	
ENG. BRANCH	DGL	

PENTHOUSE PIPING FLOOR PLAN

MP-105A

FLIGHT PROJECTS BUILDING

NATIONAL AERONAUTICS AND SPACE ADMINISTRATION

GODDARD SPACE FLIGHT CENTER GREENBELT, MARYLAND
FACILITIES MANAGEMENT DIVISION

DATE ISSUED	CoF CODE OR WRF	AECOM PROJECT NO.	SCALE
10/12/2012	12GXAZ	60187636	1/8" = 1'-0"

FILE DATE: 10/12/2012 9:34:49 AM

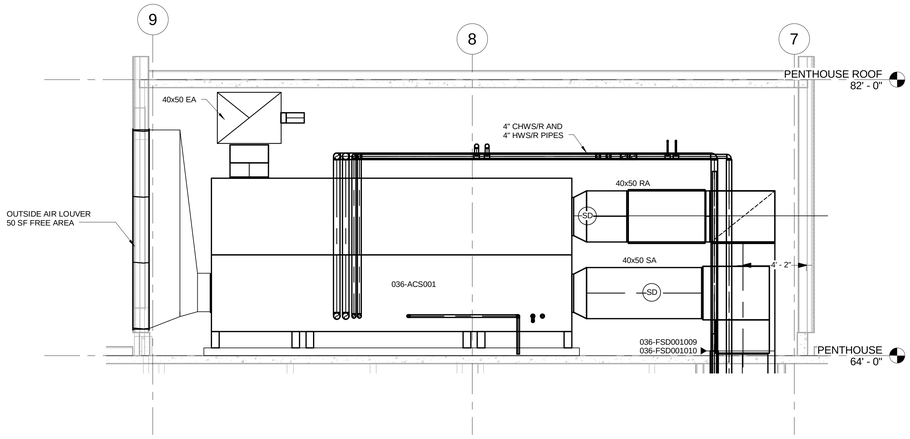

SECTION #1

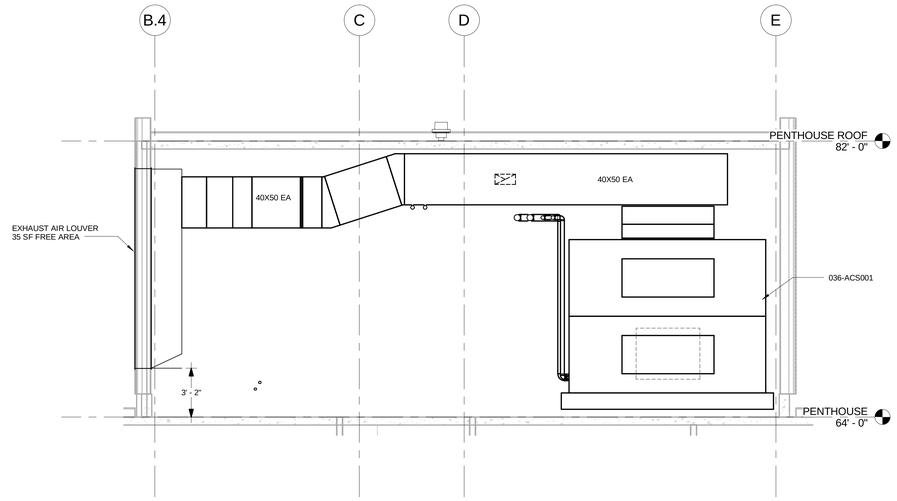

SECTION #2

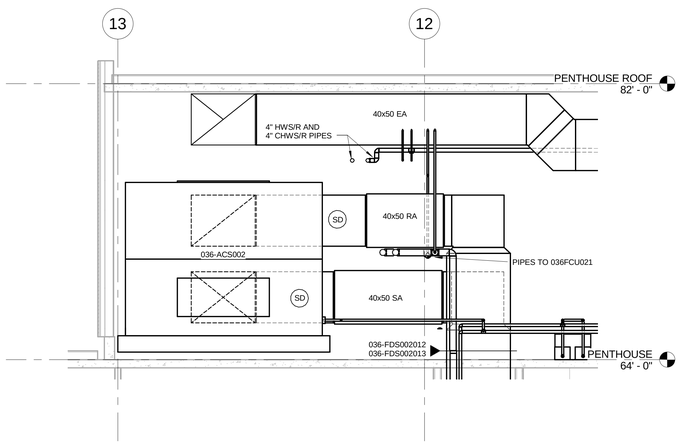

SECTION #3

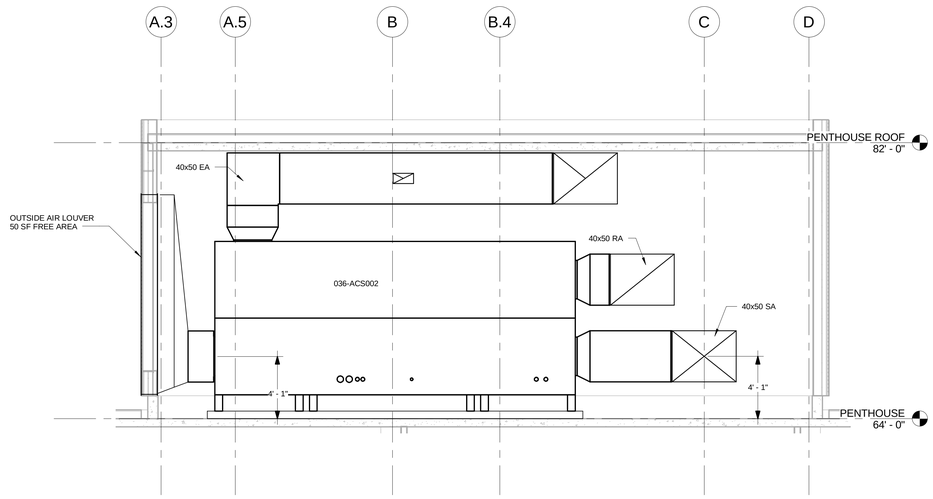

SECTION #4

1/4"=1'-0" 4' 2' 0 4' 8'

100% SUBMITTAL

AECOM

AECOM TECHNICAL SERVICES, INC.
3101 WILSON BOULEVARD
SUITE 900
ARLINGTON, VA 22201

T: 703-682-4900 F: 703.682.4901
www.aecom.com

SEAL AREA

STATE OF MARYLAND
PAUL DRIVER SANTIAGO
No. 13276
REGISTERED
PROFESSIONAL ENGINEER

KEY PLAN

REV	DATE	DESCRIPTION	S&R BR.	CUSTOMER	PM	SECT. HEAD

	INITIALS	DATE
DRAWN BY	Designer	
CHECKED BY	PS	
A-E MANAGER	EW	
ENVIRONMENTAL BRANCH	JH	
SAFETY BRANCH	CS	
CM	MMD	
PM	RWP	
CUSTOMER	JWB	
ENG. BRANCH	DGL	

MECHANICAL SECTIONS

M-301

FLIGHT PROJECTS BUILDING

NATIONAL AERONAUTICS AND SPACE ADMINISTRATION

GODDARD SPACE FLIGHT CENTER GREENBELT, MARYLAND
FACILITIES MANAGEMENT DIVISION

DATE ISSUED	CoF CODE OR WR#	AECOM PROJECT NO.	SCALE
10/12/2012	12GXAZ	60187636	1/4" = 1'-0"

FILE DATE: 10/12/2012 9:25:50 AM

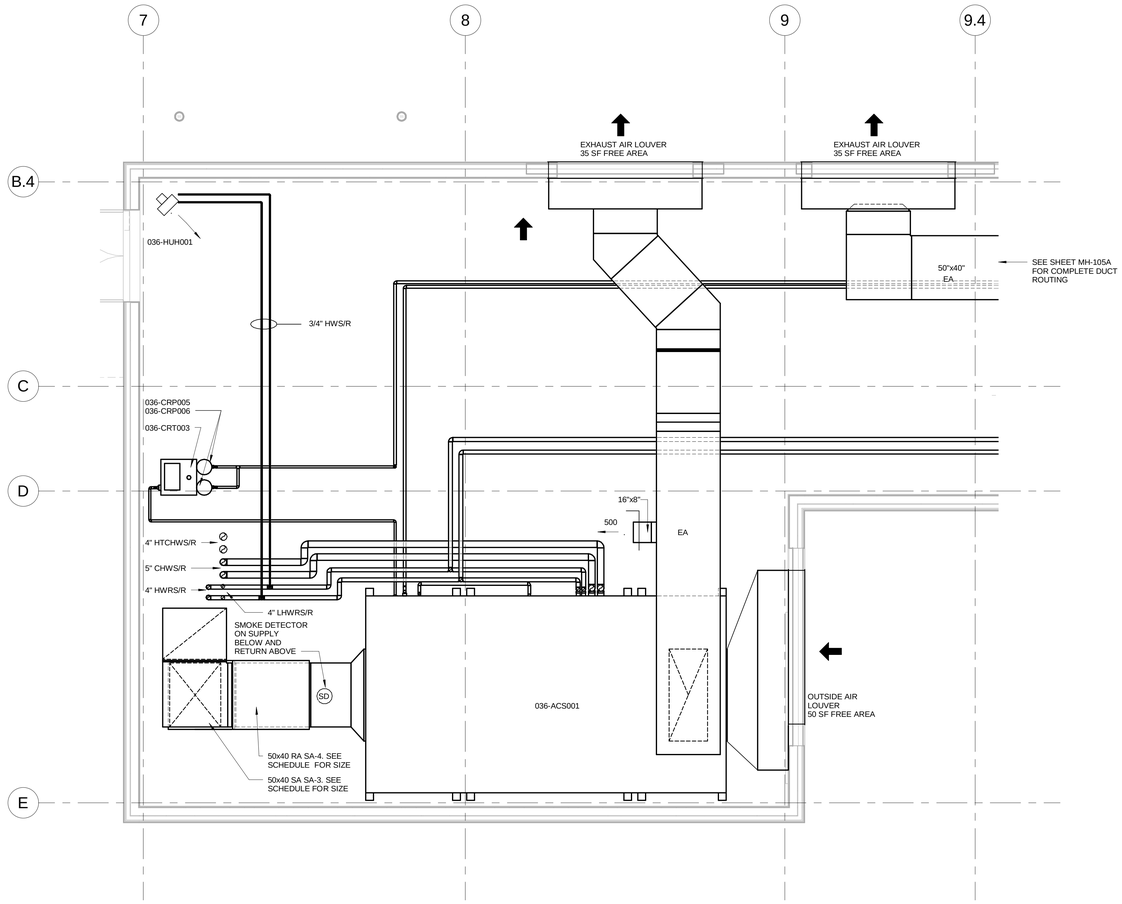

#1 ENLARGED PART PLAN PENTHOUSE - NORTH

FROM SHEET MH-105

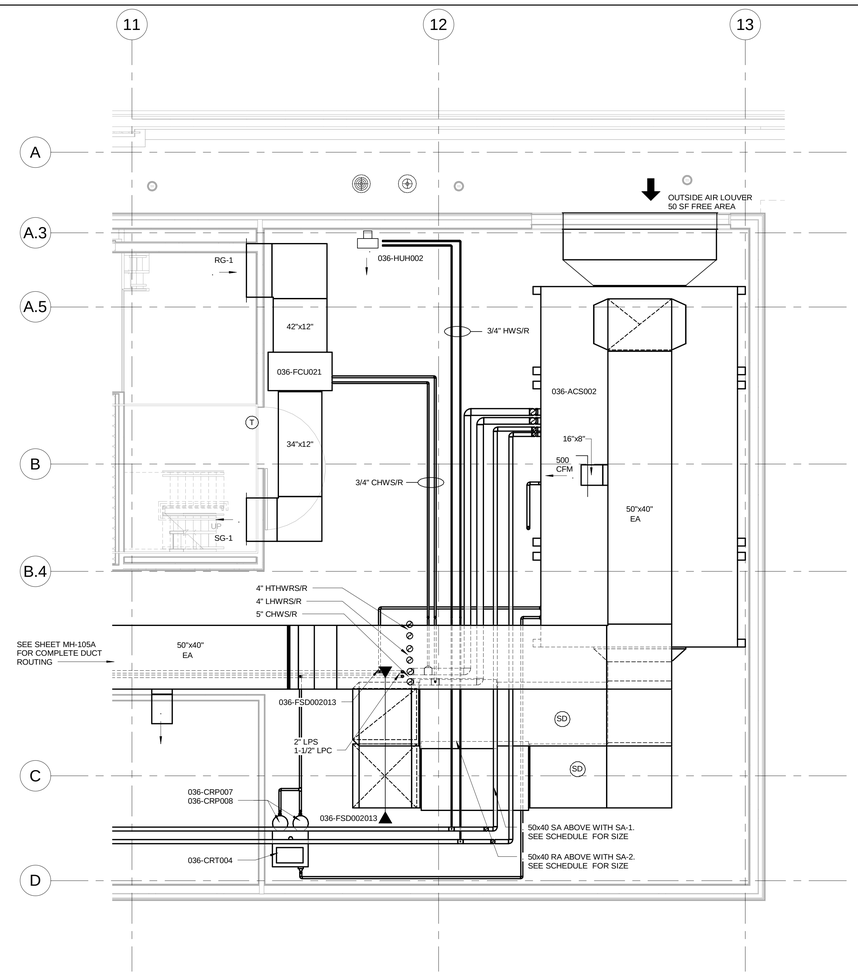

#2 ENLARGED PART PLAN PENTHOUSE -SOUTH

FROM SHEET MH-105

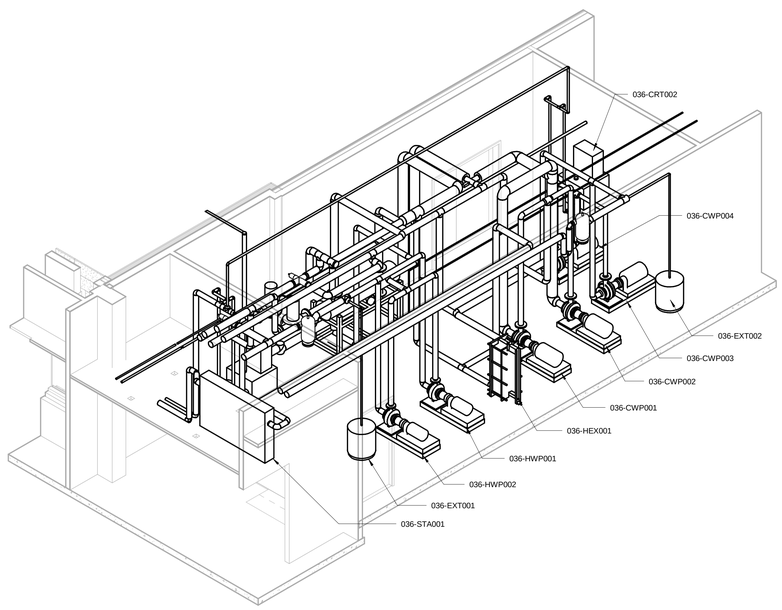

#3 ENLARGED 3D PART PLAN - PUMP ROOM PIPING WITH EQUIPMENT

FROM SHEET MP-101B

1/4"=1'-0" 4' 2' 0 4' 8'

100% SUBMITTAL

AECOM

AECOM TECHNICAL SERVICES, INC.
3101 WILSON BOULEVARD
SUITE 900
ARLINGTON, VA 22201

T: 703-682-4900 F: 703.682.4901
www.aecom.com

SEAL AREA

STATE OF MARYLAND
PAUL JOSEPH SCHUTZ
No. 13876
REGISTERED
PROFESSIONAL ENGINEER

KEY PLAN

REV	DATE	DESCRIPTION	S&R BR.	CUSTOMER	PM	SECT. HEAD

	INITIALS	DATE
DRAWN BY	Designer	
CHECKED BY	PS	
A-E MANAGER	EW	
ENVIRONMENTAL BRANCH	JH	
SAFETY BRANCH	CS	
CM	MMD	
PM	RWP	
CUSTOMER	JWB	
ENG. BRANCH	DGL	

MECHANICAL ENLARGED PLANS

M-401

FLIGHT PROJECTS BUILDING

NATIONAL AERONAUTICS AND SPACE ADMINISTRATION

GODDARD SPACE FLIGHT CENTER GREENBELT, MARYLAND
FACILITIES MANAGEMENT DIVISION

DATE ISSUED	CoF CODE OR WR#	AECOM PROJECT NO.	SCALE
10/12/2012	12GXAZ	60187636	1/4" = 1'-0"

FILE DATE: 10/12/2012 9:25:56 AM

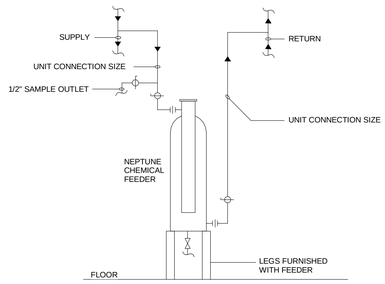

NOTE:
THIS DETAIL APPLIED TO BOTH HTCHW SYSTEM AND HEATING WITH SYSTEM. FEEDER IN HTCHW SYSTEM SHALL BE LABELED AS 036-CFT001 AND FEEDER IN HEATING WATER SYSTEM SHALL BE LABELED AS 036-CFT002.

#11 CHEMICAL BYPASS FEEDER

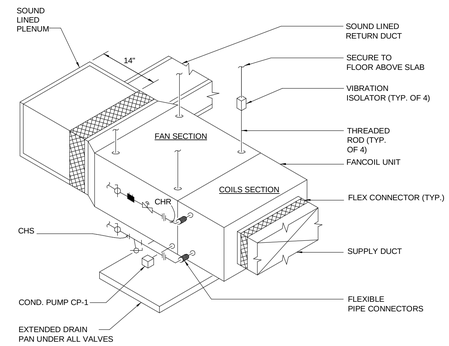

#6 HORIZONTAL FAN-COIL UNIT INSTALLATION DETAIL

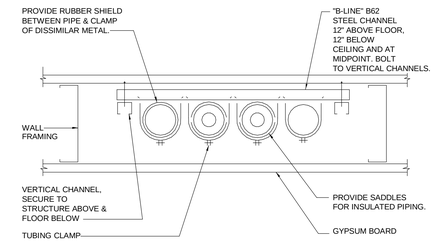

#3 VERTICAL PIPE SUPPORT DETAIL

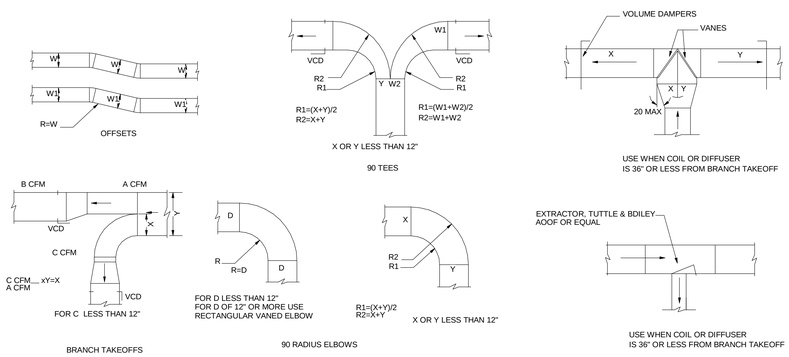

#10 RECTANGULAR DUCTWORK DETAIL

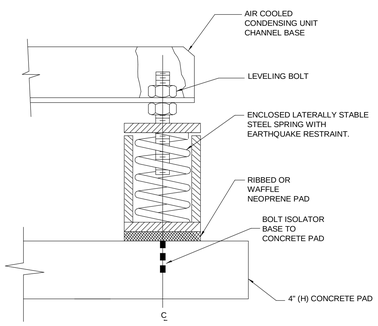

#5 VIBRATION ISOLATION DETAIL

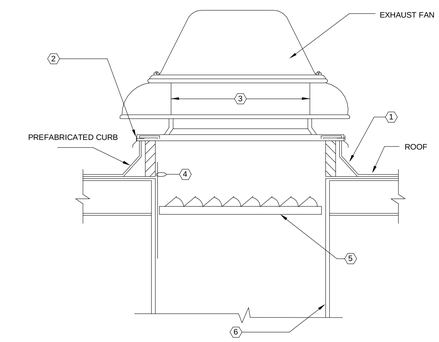

NOTES:

1. INSULATED METAL CURB. SEE ARCHITECTURAL DRAWINGS FOR BASE FLASHING.
2. PROVIDE PLATED LAG BOLTS TO SECURE FAN TO CURB NAILER STRIP PER FAN MER'S RECOMMENDATIONS.
3. BIRD SCREEN.
4. POWER WIRING TO FAN MOTOR.
5. ALUMINUM GRAVITY BACKDRAFT DAMPER.
6. EXHAUST DUCTWORK.

#2 POWER ROF VENTILATOR INSTALLATION

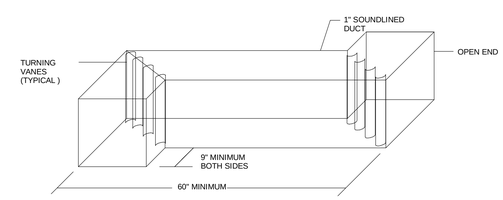

GENERAL NOTE
1. SOUND LINING SHALL BE 1" THICK, DUCT SIZES SHOWN ARE NET FREE AREA FROM INSIDE FACE OF SOUND LINING.

2. STANDARD DUCT SIZE SHALL BE 8x8 UNLESS OTHERWISE IDENTIFY ON FLOOR PLAN.

#1 TRANSFER DUCT DETAIL

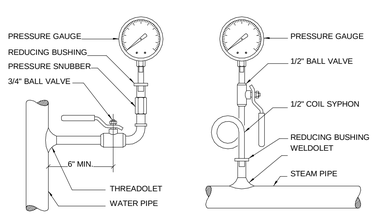

NOTE: FOR PIPES 2" AND SMALLER, USE FITTING INSTEAD OF THREADOLET OR WELDOLET.

#9 TYPICAL PRESSURE GAUGE MOUNTING DETAIL

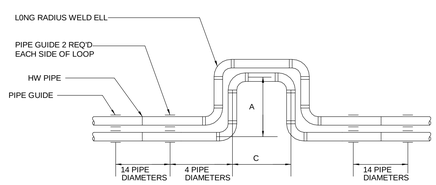

SERVICE	SIZE "A"	SIZE "C"
HOT WATER	3'-0"	4'-0"

#7 EXPANSION LOOP DETAIL

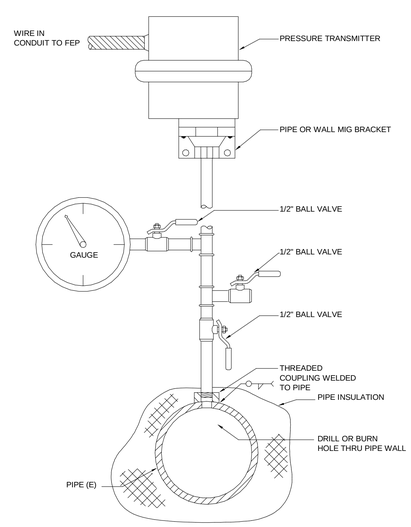

#4 PRESSURE TRANSMITTER INSTALLATION DETAIL

100% SUBMITTAL

AECOM

AECOM TECHNICAL SERVICES, INC.
3101 WILSON BOULEVARD
SUITE 900
ARLINGTON, VA 22201

T: 703-682-4900 F: 703.682.4901
www.aecom.com

SEAL AREA

STATE OF MARYLAND
No. 13828
REGISTERED PROFESSIONAL ENGINEER

KEY PLAN

REV	DATE	DESCRIPTION	S&R BR.	CUSTOMER	PM	SECT. HEAD

	INITIALS	DATE
DRAWN BY	Designer	
CHECKED BY	PS	
A-E MANAGER	EW	
ENVIRONMENTAL BRANCH	JH	
SAFETY BRANCH	CS	
CM	MMD	
PM	RWP	
CUSTOMER	JWB	
ENG. BRANCH	DGL	

MECHANICAL DETAILS

M-501

FLIGHT PROJECTS BUILDING

NATIONAL AERONAUTICS AND SPACE ADMINISTRATION
GODDARD SPACE FLIGHT CENTER GREENBELT, MARYLAND
FACILITIES MANAGEMENT DIVISION

DATE ISSUED	CoF CODE OR WR#	AECOM PROJECT NO.	SCALE
10/12/2012	12GXAZ	60187636	1/8" = 1'-0"

FILE DATE: 10/12/2012 9:25:59 AM

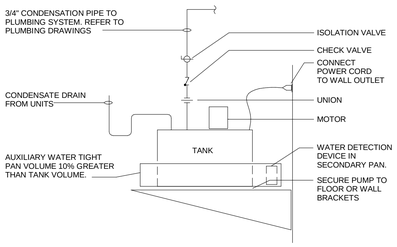

NOTE:
THIS DETAIL APPLIED TO CONDENSATE PUMPS FOR FAN COIL UNITS AND COMPUTER ROOM UNIT ON LEVEL 1

#12 CONDENSATE PUMP DETAIL

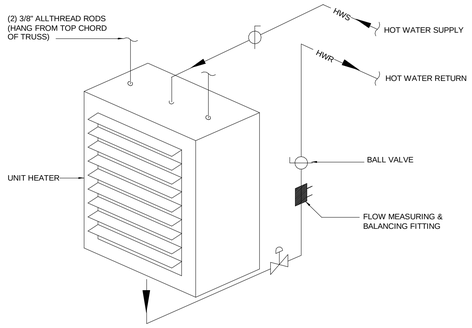

#9 UNIT HEATER PIPING DETAIL

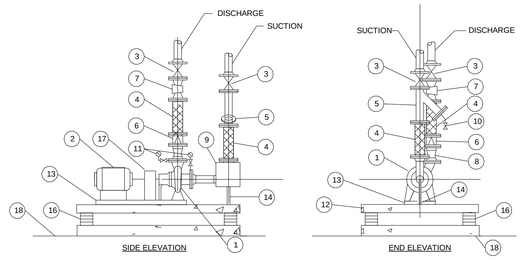

1. END SUCTION, SINGLE STAGE PUMP
2. MOTOR
3. BUTTERFLY VALVE
4. FLEXIBLE CONNECTOR
5. Y-TYPE STRAINER
6. SILENT CHECK VALVE
7. CALIBRATED BALANCING VALVE
8. CONCENTRIC REDUCER
9. SUCTION DIFFUSER
10. BALL VALVE WITH NIPPLE AND CAP
11. PRESSURE GAUGES
12. CONCRETE INERTIA BASE (KINETICS "CIB-11" OR EQUAL)
13. PUMP AND MOTOR BASEPLATE
14. SUPPORT
15. PUMP ROOM FLOOR (PENTHOUSE MECHANICAL ROOM)
16. SPRING VIBRATION ISOLATORS, MIN. 1" STATIC DEFLECTION (KINETICS "FDS" OR EQUAL).
17. COUPLING GUARD
18. 4 INCH HIGH CONCRETE HOUSEKEEPING PAD

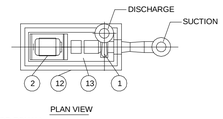

#6 END SECTION PUMP PIPING DETAIL

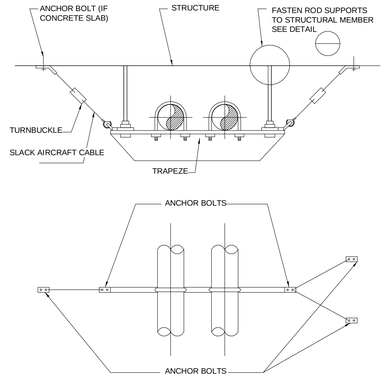

NOTES:
1. CABLE ANCHORS, ETC. TO BE CHECKED BY STRUCTURAL ENGINEER.
2. MAXIMUM SPACING INTERVAL TO BE DETERMINED BY STRUCTURAL ENGINEER.
3. LOCATE VIBRATION ISOLATION HANGER DIRECTLY ABOVE SEISMIC RESTRAINT AS INDICATED.
4. MUST BE MODIFIED WITH UPPER TRAVEL LIMIT STOP.

#3 HORIZONTAL PIPE SUPPORT DETAIL

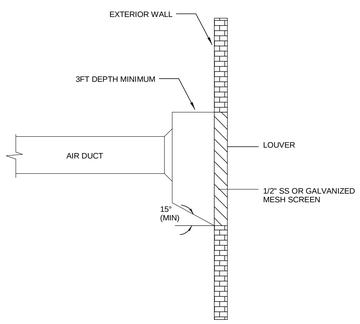

#11 DRAINABLE LOUVER PLENUM

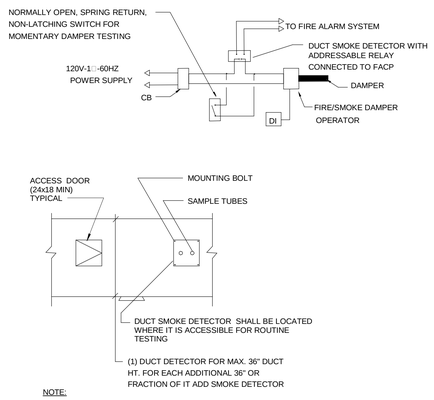

NOTE:
1. DUCT SMOKE DETECTOR SHALL BE INSTALLED WHERE IT IS ACCESSIBLE FOR ROUTING TESTING.

#8 DUCT SMOKE DETECTOR DETAIL

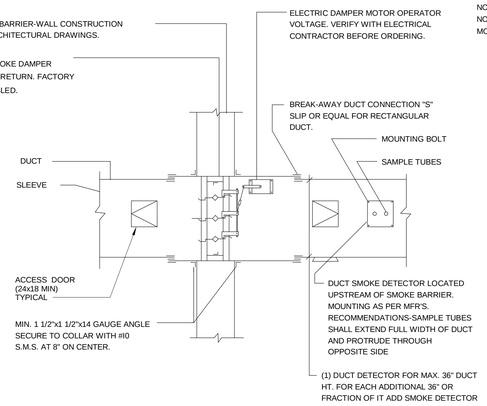

#5 COMBINATION FIRE-SMOKE DAMPER DETAIL

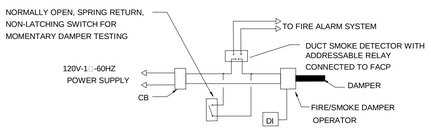

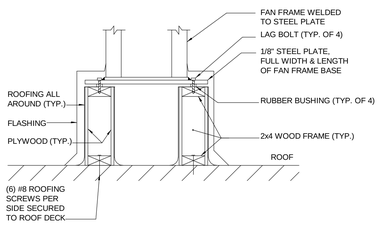

NOTE:
1. SEE ARCHITECT DRAWING FOR FLASHING DETAIL

#2 FAN CURB DETAIL

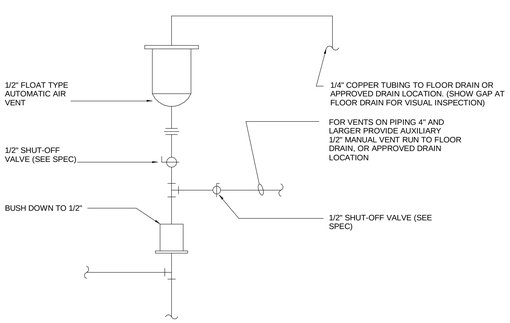

#10 AUTOMATIC AIR VENT DETAIL

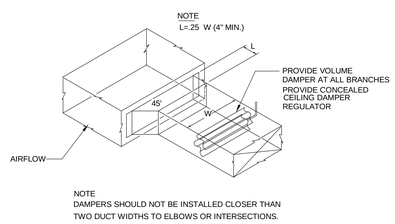

NOTE
DAMPERS SHOULD NOT BE INSTALLED CLOSER THAN TWO DUCT WIDTHS TO ELBOWS OR INTERSECTIONS.

#7 BRANCH DUCT TAKE-OFF AND DAMPER DETAIL

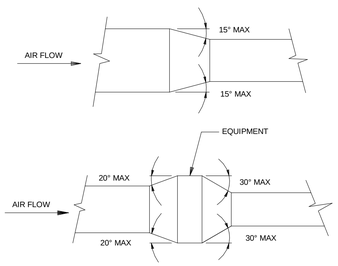

NOTE:
UNLESS OTHERWISE INDICATED ON PLANS, ABRUPT TRANSITIONS ARE NOT ALLOWED.

#4 DUCT TRANSITION WITH EQUIPMENT DETAIL

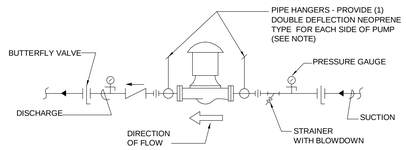

NOTES:
1. SUPPORT PUMP FROM PIPING ONLY. DO NOT SUPPORT PUMP FROM MOTOR.
2. THIS DETAIL APPLIED TO HEATING COILS IN AHU001 AND AHU002

#1 INLINE PUMP CONNECTION DETAIL

100% SUBMITTAL

AECOM
AECOM TECHNICAL SERVICES, INC.
3101 WILSON BOULEVARD
SUITE 900
ARLINGTON, VA 22201
T: 703-682-4900 F: 703.682.4901
www.aecom.com

SEAL AREA

STATE OF MARYLAND
PAUL VINCENT SCHUTTE
No. 13878
REGISTERED PROFESSIONAL ENGINEER

KEY PLAN

REV	DATE	DESCRIPTION	S&R BR.	CUSTOMER	PM	SECT. HEAD

	INITIALS	DATE
DRAWN BY	Designer	
CHECKED BY	PS	
A-E MANAGER	EW	
ENVIRONMENTAL BRANCH	JH	
SAFETY BRANCH	CS	
CM	MMD	
PM	RWP	
CUSTOMER	JWB	
ENG. BRANCH	DGL	

MECHANICAL DETAILS

M-502

FLIGHT PROJECTS BUILDING

NATIONAL AERONAUTICS AND SPACE ADMINISTRATION
GODDARD SPACE FLIGHT CENTER GREENBELT, MARYLAND
FACILITIES MANAGEMENT DIVISION

DATE ISSUED	CoF CODE OR WR#	AECOM PROJECT NO.	SCALE
10/12/2012	12GXAZ	60187636	1/8" = 1'-0"

FILE DATE: 10/12/2012 9:26:02 AM

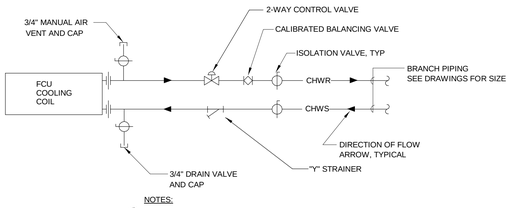

NOTES:

1. THIS DETAIL APPLIED TO HEATING COIL FOR 4 PIPE FCU.
2. THIS DETAIL ALSO APPLIES TO VAV BOX HEATING COIL, WITH LHWS/R PIPES

#15 TYPICAL COIL CONNECTION PIPING DETAIL FCU

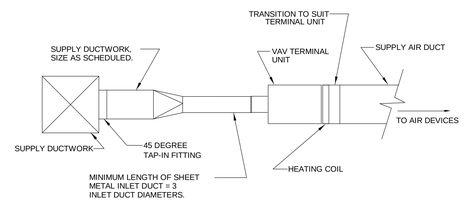

#11 TERMINAL UNIT AIR DUCT CONNECTION DETAIL

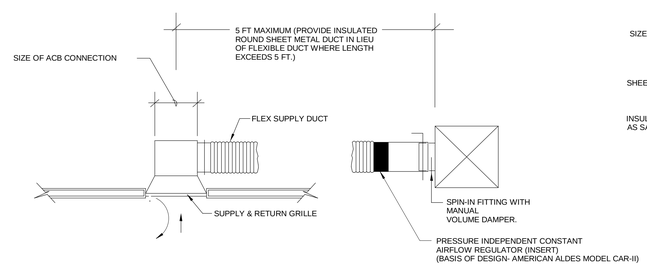

#7 2'x4' CHILLED BEAM PRIMARY AIR CONNECTION

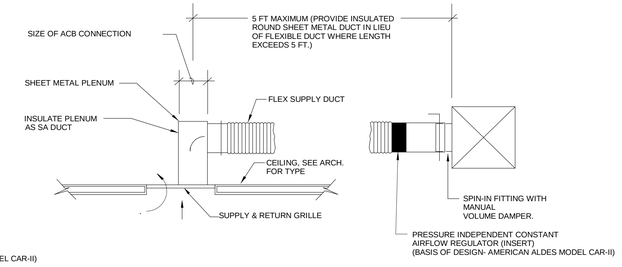

#3 LINEAR CHILLED BEAM PRIMARY AIR CONNECTION

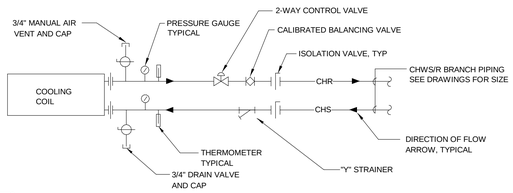

NOTES:

1. AIR VENTS, AND OTHER PIPING APPURTENANCES SHALL BE LOCATED WITHIN THE UNIT ENCLOSURE.
2. THIS DETAIL APPLIES TO ALL AHU'S AND 4-PIPES FCU'S.

#14 TYPICAL COOLING COIL PIPING DETAIL FOR ACS

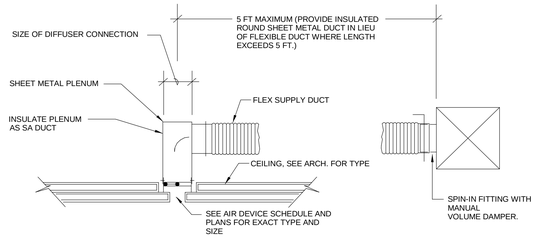

#10 LINEAR DIFFUSER INSTALLATION DETAIL

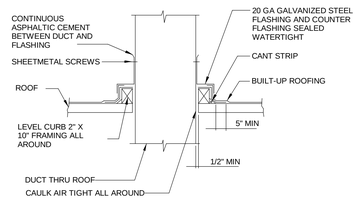

#6 DUCT THRU ROOF DETAIL

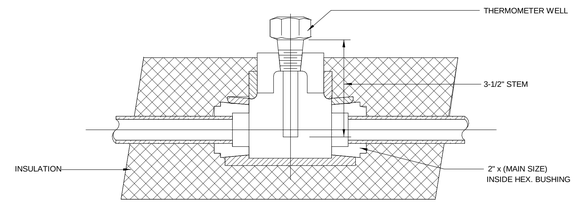

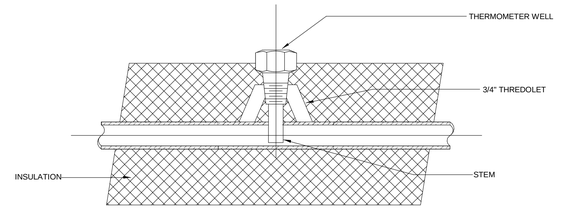

#2 THERMOMETER WELL INSTALLATION DETAIL

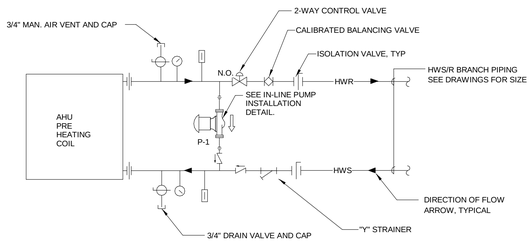

NOTES:

1. AIR VENTS, AND OTHER PIPING APPURTENANCES SHALL BE LOCATED WITHIN THE UNIT ENCLOSURE.
2. THIS DETAIL APPLIES TO PRE-HEATING COIL ONLY.

#13TYPICAL PUMPED HEATING COIL PIPING DETAIL FOR 100% O.A. ACS

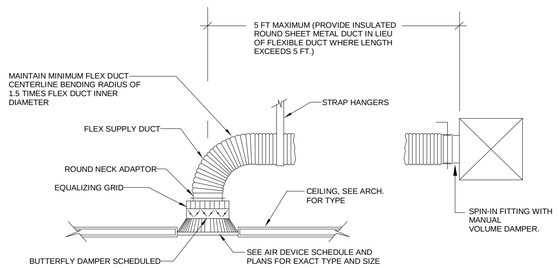

NOTE INSULATE AND VAPOR SEAL DIFFUSER BACK PANEL, NECK, AND ACCESSORIES ABOVE CEILINGS AS SPECIFIED FOR SA DUCTWORK.

#9 CEILING DIFFUSER DETAIL

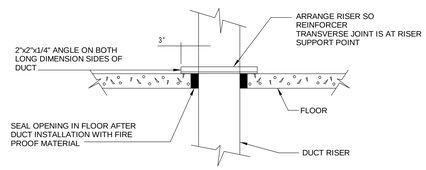

LOW PRESSURE DUCT RISER SUPPORT

#5 DUCT RISER SUPPORT

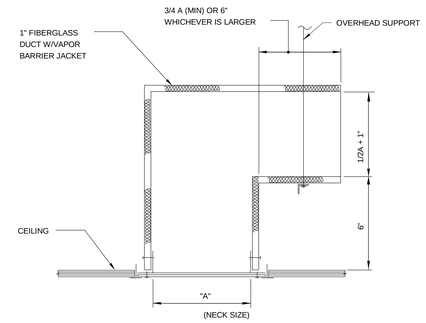

#1 RETURN AIR BOOT DETAIL

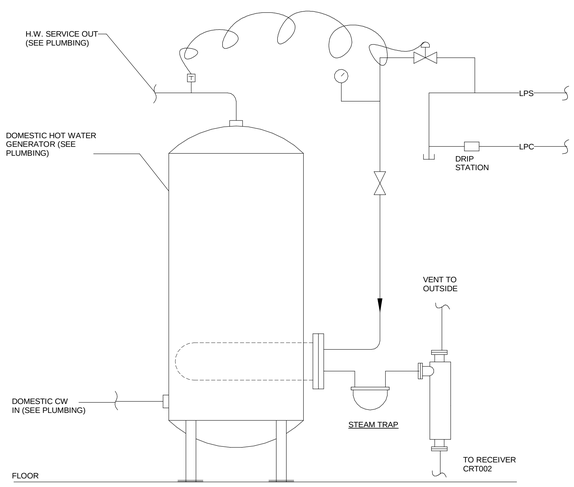

NOTE:

1. FOR FURTURE DETAIL OF THE WATER TANK, SEE DETAIL ON PLUMBING DRAWINGS.

#12 DOMESTIC HOT WATER HEATER DETAIL

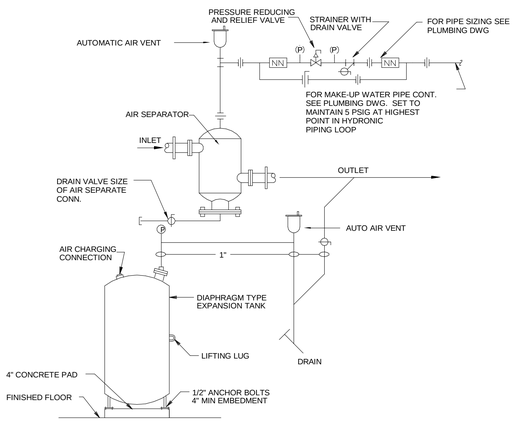

#8 AIR SEPARATOR AND DIAPHRAGM TYPE EXPANSION TANK CONNECTION DETAIL

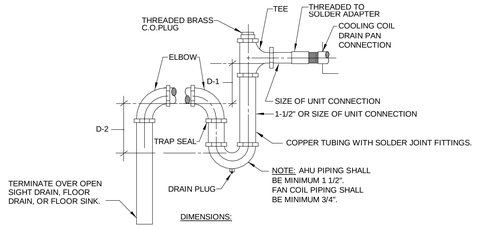

DIMENSIONS:

FOR DRAW-THRU UNITS: D-1 = (NEGATIVE) CABINET OPERATING STATIC PRESSURE PLUS 2 INCHES. D-2 = MIN 2"

#4 TYPICAL AHU / AC CONDENSATE DRAIN DETAIL

100% SUBMITTAL

AECOM

AECOM TECHNICAL SERVICES, INC.
3101 WILSON BOULEVARD
SUITE 900
ARLINGTON, VA 22201

T: 703-682-4900 F: 703.682.4901
www.aecom.com

SEAL AREA

STATE OF MARYLAND PAUL VINCENT WESTLUND No. 13878 REGISTERED PROFESSIONAL ENGINEER

KEY PLAN

REV	DATE	DESCRIPTION	S&R BR.	CUSTOMER	PM	SECT. HEAD

	INITIALS	DATE
DRAWN BY	Designer	
CHECKED BY	PS	
A-E MANAGER	EW	
ENVIRONMENTAL BRANCH	JH	
SAFETY BRANCH	CS	
CM	MMD	
PM	RWP	
CUSTOMER	JWB	
ENG. BRANCH	DGL	

MECHANICAL DETAILS

M-503

FLIGHT PROJECTS BUILDING

NATIONAL AERONAUTICS AND SPACE ADMINISTRATION

GODDARD SPACE FLIGHT CENTER GREENBELT, MARYLAND
FACILITIES MANAGEMENT DIVISION

DATE ISSUED	CoF CODE OR WR#	AECOM PROJECT NO.	SCALE
10/12/2012	12GXAZ	60187636	1/8" = 1'-0"

FILE DATE: 10/12/2012 9:26:04 AM

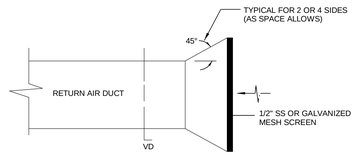

#3 RETURN DUCT AIR INTAKE

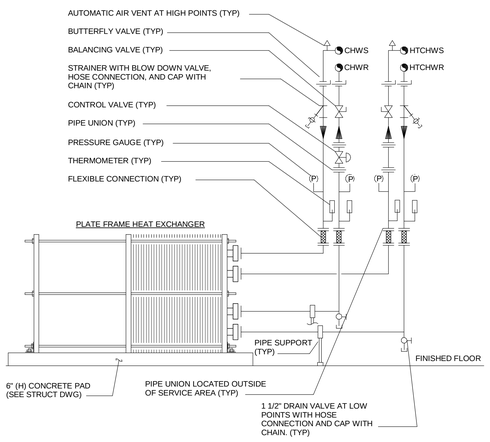

#8 PLATE FRAME HEAT EXCHANGER PIPING DETAIL

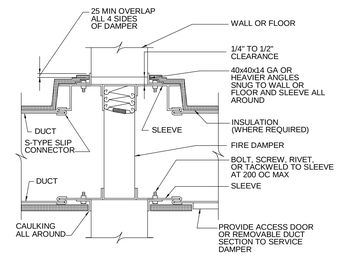

#5 TYPICAL FIRE DAMPER INSTALLTION DETAIL

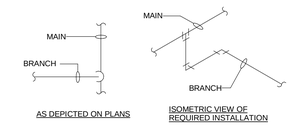

NOTE: SWING CONNECTIONS AS DEPICTED HEREIN SHALL BE PROVIDED FOR ALL HYDRONIC HOT WATER BRANCH PIPING CONNECTIONS REGARDLESS OF HOW THEY ARE ILLUSTRATED ON THE PLANS.

2 BRANCH HYDRONIC PIPING CONNECTION DETAIL

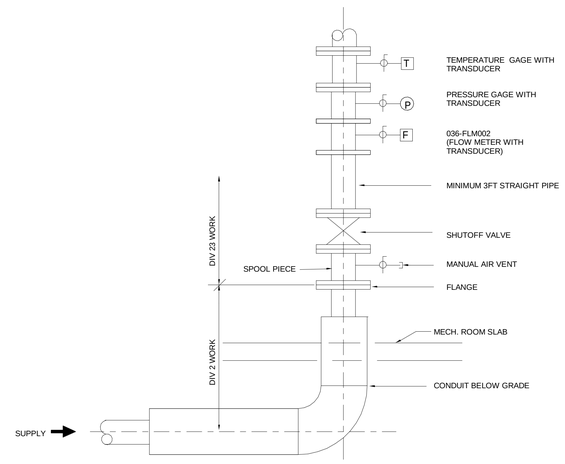

NOTES:

1. CHILLED WATER FLOWMETER SHALL BE CLAM-ON ULTRASONIC TYPE, EMCO MODEL SONOTRAK, WITH TRANSDUCER TO CONNECT TO THE BAS.
2. PROVIDE PRESSURE GAUGE AND PRESSURE TRANSDUCER, CONNECTING TO THE BAS.

#1 DETAIL OF HYDRONIC PIPING ENTERING MECHANICAL ROOM 172

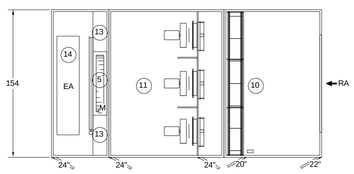

PLAN VIEW - UPPER SECTION

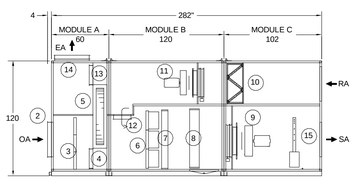

ELEVATION VIEW -FRONT

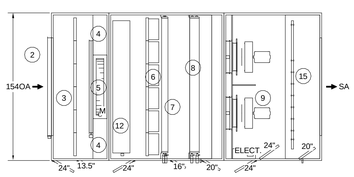

PLAN VIEW - LOWER SECTION

1. 2" D/W CASING
2. OA DAMPER
3. 2" MERV8 OA FILTERS
4. BYPASS DAMPER
5. ENTHALPY WHEEL 05 w/ GEARDRIVE
6. 12" MERV13 FINAL FILTERS (POCKET BAG)
7. HOT WATER COIL (2) (max: 30H x 139L / 57.91sa)
8. CHILLED WATER COIL (2) (max: 30H x 139L / 57.91sa)
9. SA DDF (Qty2) ER71 w/ 20HP each w/ ISOLATION DAMPER
10. 2" -30% RA FILTERS
11. EA DDF (QTY3) ER56C W/15HP EACH W/ ISOLATION DAMPER
12. RECIRCULATION DAMPER
13. BYPASS DAMPER
14. EA DAMPER
15. STEAM HUMIDIFIER

OA 6500 / 27000
SA 27000 TSP 6"
RA 27000
MX 27000
EA 27000 TSP 4.8

#7 ASC ARRANGEMENT DETAIL

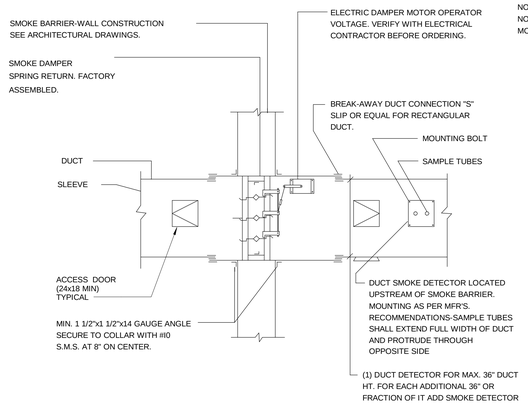

#4 SMOKE DAMPER DETAIL

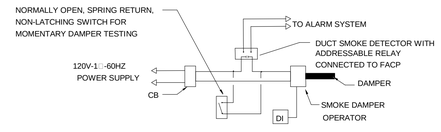

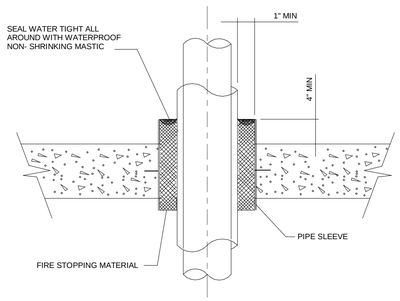

#6 PIPE PENETRATION THRU FLOOR

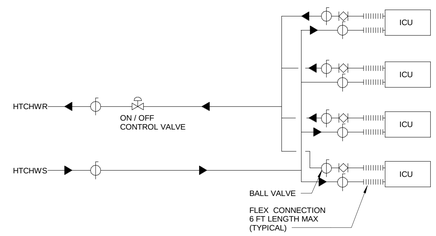

NOTE: THIS DETAIL APPLIED TO HEATING WATER COILS IN CHILLED BEAM.

#3 CHILLED BEAM PIPING DETAIL

100% SUBMITTAL

AECOM
AECOM TECHNICAL SERVICES, INC.
3101 WILSON BOULEVARD
SUITE 900
ARLINGTON, VA 22201
T: 703-682-4900 F: 703.682.4901
www.aecom.com

SEAL AREA

STATE OF MARYLAND
PAUL LEDLEY GARTLAND
No. 13276
REGISTERED
PROFESSIONAL ENGINEER

KEY PLAN

REV	DATE	DESCRIPTION	S&R BR.	CUSTOMER	PM	SECT. HEAD

	INITIALS	DATE
DRAWN BY	Designer	
CHECKED BY	PS	
A-E MANAGER	EW	
ENVIRONMENTAL BRANCH	JH	
SAFETY BRANCH	CS	
CM	MMD	
PM	RWP	
CUSTOMER	JWB	
ENG. BRANCH	DGL	

MECHANICAL DETAILS

M-504

FLIGHT PROJECTS BUILDING

NATIONAL AERONAUTICS AND SPACE ADMINISTRATION

GODDARD SPACE FLIGHT CENTER GREENBELT, MARYLAND
FACILITIES MANAGEMENT DIVISION

DATE ISSUED	CoF CODE OR WR#	AECOM PROJECT NO.	SCALE
10/12/2012	12GXAZ	60187636	1/8" = 1'-0"

FILE DATE: 10/12/2012 9:26:06 AM

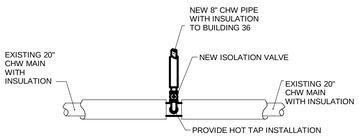

#7 UNDERGROUND CHILLED WATER PIPE CONNECTION

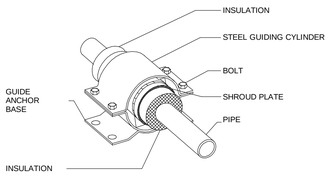

#6 PIPE GUIDE FOR INSULATION PIPE

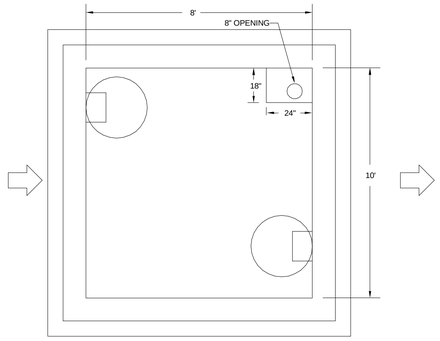

NOTES:

1. STRUCTURE SHALL BE REINFORCED PRECAST CONCRETE.
2. STRUCTURE SHALL BE DESIGNED TO WITHSTAND BUOYANCY FORCE OF FULL SUBMERGENCE. DESIGN DRAWINGS SHALL BE SEALED BY A REGISTERED PROFESSIONAL ENGINEER.

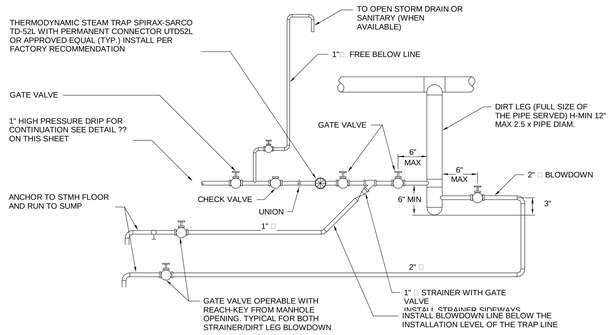

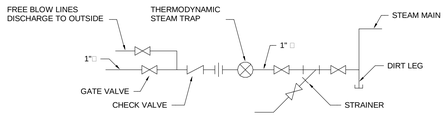

MATERIAL LIST

STEAM (DIRT LEG)	SCHEDULE 40
CONDENSATE	SCHEDULE 40
TRAP LINE	SCHEDULE XXS
	SCHEDULE 80

STEAM MANHOLE PLANS OR DRIP, TRAP AND DIFFUSER ASSEMBLES ARE GENERIC. SPECIFIC REQUIREMENT OF THE DETAIL AND DETAIL#? DWG. M-?? MUST BE ADHERED TO FOR ALL INSTALLATIONS.

GATE VALVES AT THE END OF STRAINER AND DIRT LEG BLOWDOWN LINES MUST BE POSITIONED SUCH THAT THEY ARE OPERABLE BY REACH KEY FROM MANHOLE COVER OPENING.

A SEPARATE TRAP ASSEMBLY IS REQUIRED FROM EACH DIRT LEG.

EACH DIRT LEG SHALL BE SUPPORTED FROM MH FLOOR BY A SCHEDULE 80 PIPE WELDED TO LEG NO MORE THAN TWO PIPE SIZES SMALLER THAN DIRT LEG IS SUPPORT.

MULTIPLE DIRT LEG BLOWDOWN LINES IN ONE MANHOLE WAY BE TIED TOGETHER AFTER THE VALVE FROM EACH DIRT LEG. MULTIPLE STRAINER BLOWDOWN LINES MAY BE TIED TOGETHER AFTER THE VALVE FROM EACH STRAINER.

CONNECTION OF DISSIMILAR METALS SHALL BE DONE THRU DIELECTRIC UNIONS.

#2 HIGH PRESSURE TRAP LINE DETAIL (MANHOLE)

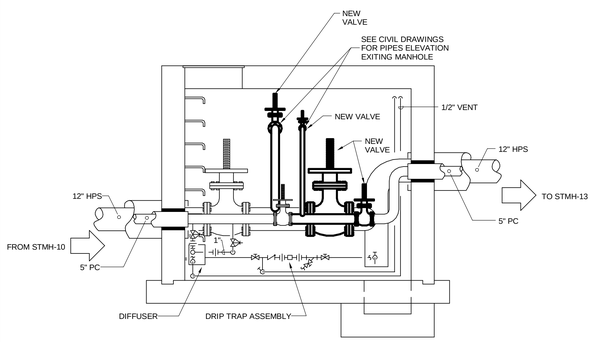

EXISTING STMH-12 SECTION A

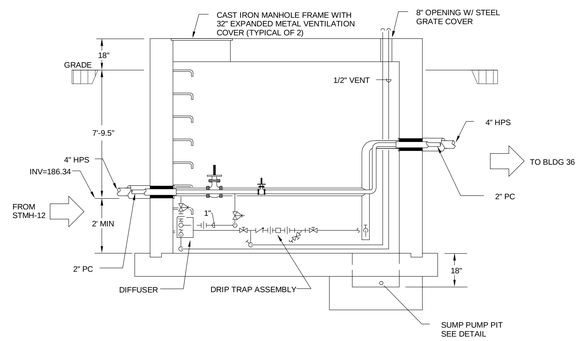

NEW STEAM MANHOLE SECTION A

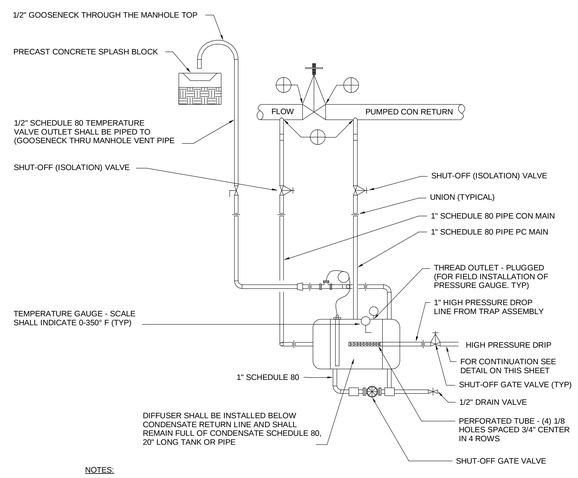

NOTES:

THIS DIFFUSER DETAIL SHOWN IS GENERAL, AND SHALL BE MODIFIED IN LAYOUT TO SHUT THE PARTICULAR PROJECT MANHOLE INSTALL ASSEMBLY, COMPLETE WITH VALVES AND APPURTENANCES AT LOW POINT IN THE MANHOLE(S) SEE PLAN DWGS FOR LOCATION(S).

PROVIDE A DETAILS SHOP DWG OF TYPICAL CONDENSATE DIFFUSER AND COMPONENTS.

MOUNT DIFFUSER OFF WALL OR FLOOR WITH STEEL ANGLE BRACKETS.

#3 CONDENSATE DIFFUSER PIPING DETAIL

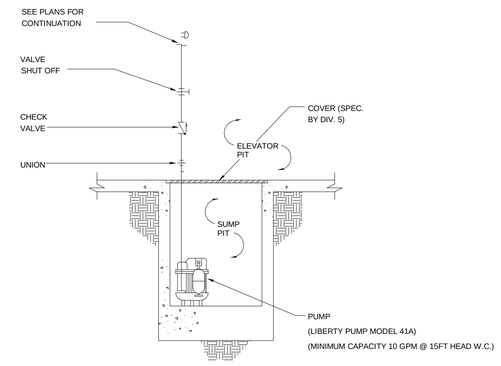

#1 SUMP PUMP PIT DETAIL

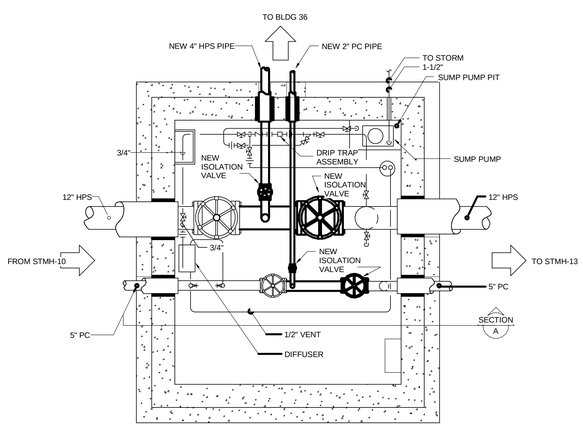

#5 EXISTING STMH-12 NEW STEAM PIPES CONNECTIONS

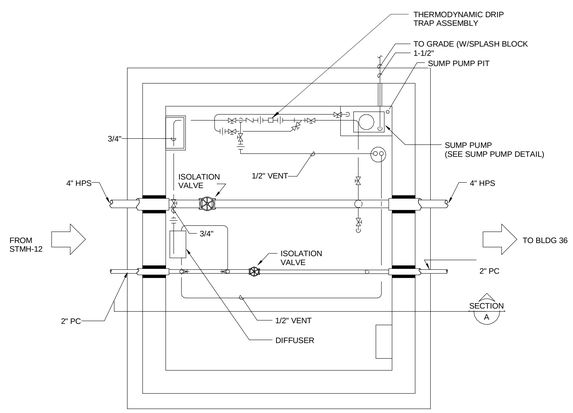

#4 NEW STEAM MANHOLE DETAIL

100% SUBMITTAL

AECOM

AECOM TECHNICAL SERVICES, INC.
3101 WILSON BOULEVARD
SUITE 900
ARLINGTON, VA 22201

T: 703-682-4900 F: 703.682.4901
www.aecom.com

SEAL AREA

STATE OF MARYLAND — PAUL DEWEY SCHUTZ — No. 13276 — REGISTERED PROFESSIONAL ENGINEER

KEY PLAN

REV	DATE	DESCRIPTION	S&R BR.	CUSTOMER	PM	SECT. HEAD

	INITIALS	DATE
DRAWN BY	Designer	
CHECKED BY	PS	
A-E MANAGER	EW	
ENVIRONMENTAL BRANCH	JH	
SAFETY BRANCH	CS	
CM	MMD	
PM	RWP	
CUSTOMER	JWB	
ENG. BRANCH	DGL	

MECHANICAL DETAILS

M-505

FLIGHT PROJECTS BUILDING

NATIONAL AERONAUTICS AND SPACE ADMINISTRATION

GODDARD SPACE FLIGHT CENTER GREENBELT, MARYLAND
FACILITIES MANAGEMENT DIVISION

DATE ISSUED	CoF CODE OR WR#	AECOM PROJECT NO.	SCALE
10/12/2012	12GXAZ	60187636	1/8" = 1'-0"

FILE DATE: 10/12/2012 9:26:10 AM

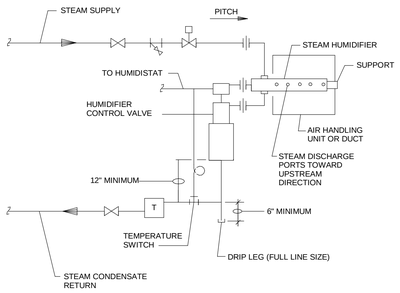

#8 STEAM HUMIDIFIER PIPING DETAIL

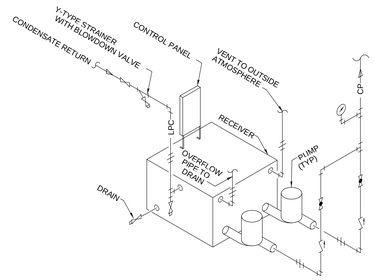

NOTE:

1. UNIT SHALL BE PROVIDED WITH DUPLEX PUMPS.
2. UNIT SHALL BE PROVIDED UNIT MOUNTED CONTROL PANEL, CAPABLE TO INTERFACE WITH BAS SYSTEM.

#5 STEAM CONDENSATE RETURN PUMP UNIT

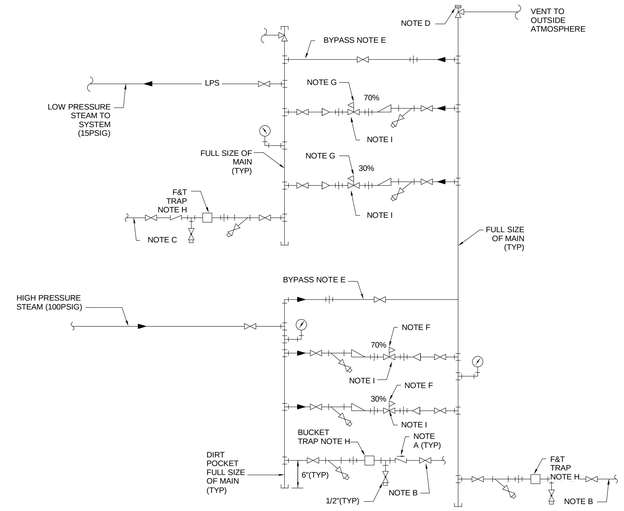

#2 STACKING ARRANGEMENT

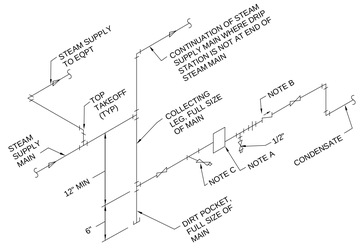

NOTES:

A. BUCKET TRAP FOR MEDIUM AND HIGH PRESSURE STEAM. FLOAT-AND-THERMOSTATIC TRAP FOR LOW PRESSURE STEAM. CAPACITY SHALL BE 200 LB/HR MINIMUM.

B. PROVIDE CHECK VALVE ONLY WHERE CONDENSATE MAIN IS ABOVE TRAP DISCHARGE.

C. Y-TYPE STRAINER WITH BLOWDOWN VALVE.

#7 DRIP STATION DETAIL

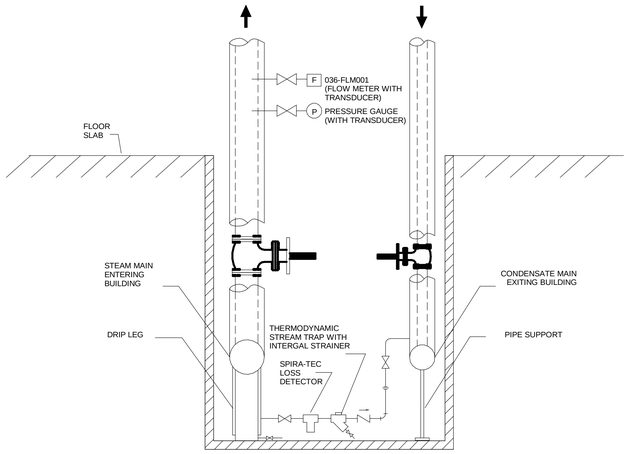

NOTE:

1. STEAM FLOW METER SHALL BE INLINE VORTEX TYPE, EMCO MODEL PhD

#4 STEAM PIPE AT BUILDING PIT

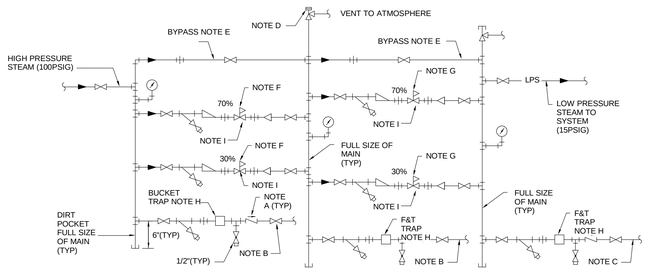

NOTES:

A. PROVIDE CHECK VALVE ONLY WHERE CONDENSATE MAIN IS ABOVE TRAP DISCHARGE.

B. ROUTE TO MEDIUM PRESSURE CNDS MAIN OR FLASH LEG.

C. ROUTE TO LOW PRESSURE CNDS MAIN.

D. SAFETY VALVE.

E. BYPASS LINE SIZE SHALL EQUAL THE LARGER OF THE TWO PRV PORT SIZES.

F. PRV REDUCING FROM 100 PSIG TO 60 PSIG.

G. PRV REDUCING FROM 60 PSIG TO 15 PSIG.

H. STEAM TRAP CAPACITY SHALL BE 200 LB/HR MINIMUM.

I. INSTALL PRV TO MANUFACTURER'S REQUIREMENTS.

HORIZONTAL ARRANGEMENT

#1 STEAM PRESSURE REDUCING STATION - TWO STAGES

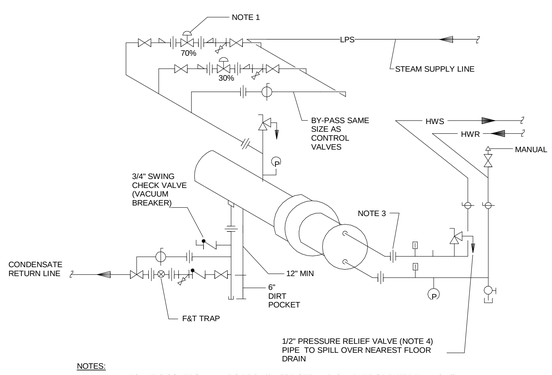

NOTES:

1. MAX AUTOMATIC CONTROL VALVE SIZE 2-1/2". FOR STEAM FLOW RATE GREATER THAN 2-1/2" CAPACITY, FURNISH TWO CONTROL VALVES IN PARALLEL AS INDICATED. VALVE SHALL BE BASED ON 70% AND 30% DEMAND.
2. BY-PASS PIPING AROUND F&T TRAP LEG SHALL BE SAME AS TRAP
3. PROVIDE PIPE UNIONS & FLANGES; & ARRANGE WATER PIPING TO FACILITATE TUBE BUNDLE REMOVAL WITH MINIMUM DISTURBANCE TO PIPING.
4. PRESSURE RELIEF VALVE SET AT 20% OVER WORKING PRESSURE.

#6 STEAM TO WATER HEAT EXCHANGER

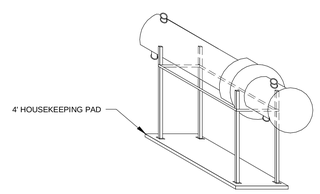

NOTES:

1. THIS DETAIL APPLIED TO THE HWC001 UNIT.
2. INSTALL HEAT EXCHANGER AT MINIMUM 5FT ABOVE THE FLOOR TO ENSURE GRAVITY WORKS WITH THE CONDENSATE RECEIVER UNIT.

#3 SHELL AND TUBE HEAT EXCHANGER SUPPORT

100% SUBMITTAL

AECOM

AECOM TECHNICAL SERVICES, INC.
3101 WILSON BOULEVARD
SUITE 900
ARLINGTON, VA 22201

T: 703-682-4900 F: 703.682.4901
www.aecom.com

SEAL AREA

STATE OF MARYLAND
PAUL WINFIELD SCHLEIHT
No. 13878
REGISTERED PROFESSIONAL ENGINEER

KEY PLAN

REV	DATE	DESCRIPTION	S&R BR.	CUSTOMER	PM	SECT. HEAD

	INITIALS	DATE
DRAWN BY	Designer	
CHECKED BY	PS	
A-E MANAGER	EW	
ENVIRONMENTAL BRANCH	JH	
SAFETY BRANCH	CS	
CM	MMD	
PM	RWP	
CUSTOMER	JWB	
ENG. BRANCH	DGL	

MECHANICAL DETAILS

M-506

FLIGHT PROJECTS BUILDING

NATIONAL AERONAUTICS AND SPACE ADMINISTRATION

GODDARD SPACE FLIGHT CENTER GREENBELT, MARYLAND
FACILITIES MANAGEMENT DIVISION

DATE ISSUED	CoF CODE OR WR#	AECOM PROJECT NO.	SCALE
10/12/2012	12GXAZ	60187636	1/8" = 1'-0"

FILE DATE: 10/12/2012 9:26:13 AM

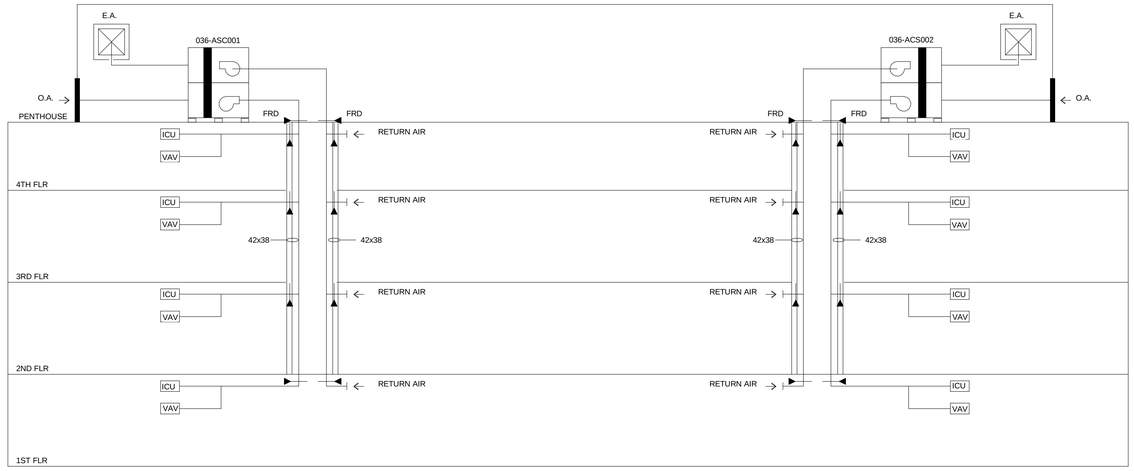

SUPPLY AIR RISER DIAGRAM

NOT TO SCALE

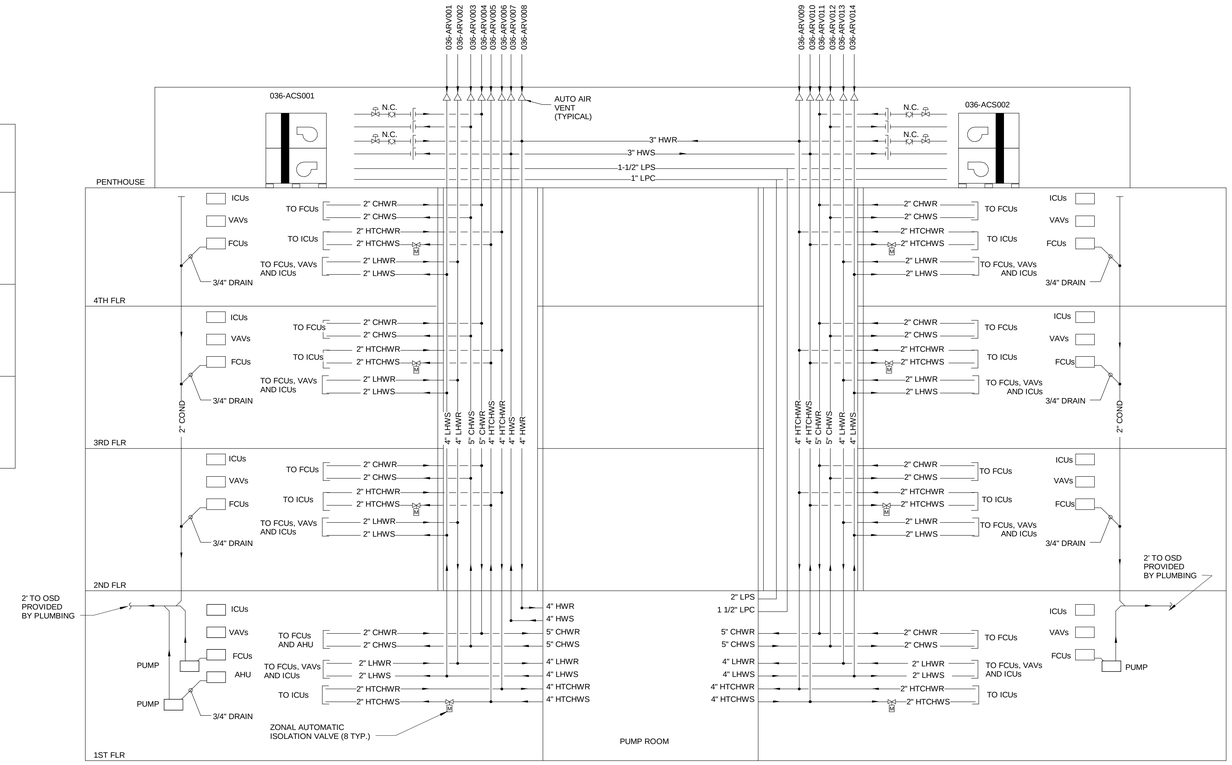

HYDRONIC RISER DIAGRAM

NOT TO SCALE

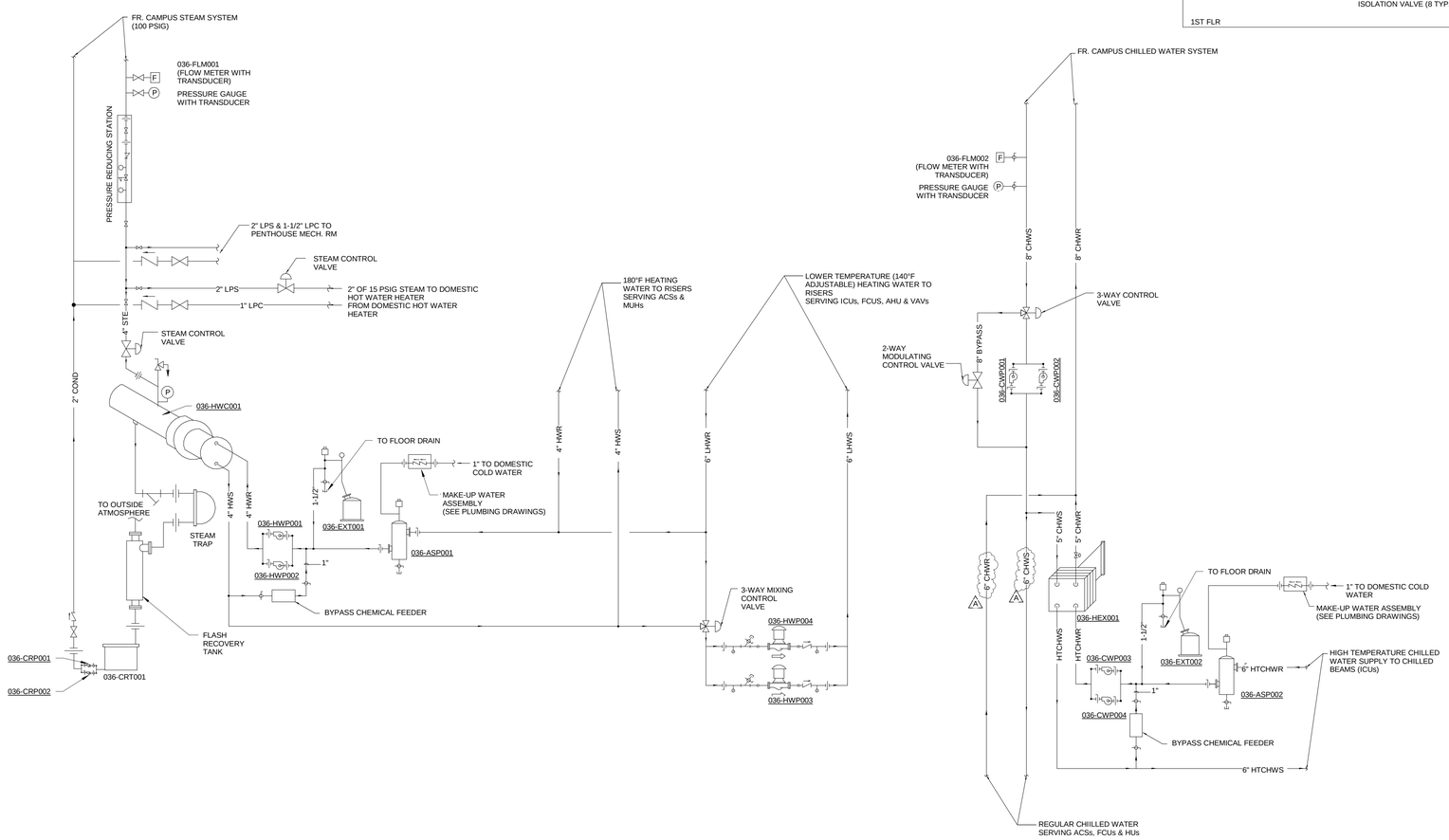

PUMP ROOM C110 DETAIL

100% SUBMITTAL

AECOM

AECOM TECHNICAL SERVICES, INC.
3101 WILSON BOULEVARD
SUITE 900
ARLINGTON, VA 22201

T: 703-682-4900 F: 703.682.4901
www.aecom.com

KEY PLAN

SEAL AREA

STATE OF MARYLAND
PAUL DEWEY SCHRIP
No. 13276
REGISTERED PROFESSIONAL ENGINEER

REV	DATE	DESCRIPTION	S&R BR.	CUSTOMER	PM	SECT. HEAD
1	Date 1	Revision 1				

	INITIALS	DATE
DRAWN BY	Designer	
CHECKED BY	PS	
A-E MANAGER	EW	
ENVIRONMENTAL BRANCH	JH	
SAFETY BRANCH	CS	
CM	MMD	
PM	RWP	
CUSTOMER	JWB	
ENG. BRANCH	DGL	

MECHANICAL RISER DIAGRAMS

M-601

FLIGHT PROJECTS BUILDING

NATIONAL AERONAUTICS AND SPACE ADMINISTRATION

GODDARD SPACE FLIGHT CENTER GREENBELT, MARYLAND
FACILITIES MANAGEMENT DIVISION

DATE ISSUED	CoF CODE OR WR#	AECOM PROJECT NO.	SCALE
10/12/2012	12GXAZ	60187636	1/8" = 1'-0"

FILE DATE: 10/12/2012 9:26:16 AM

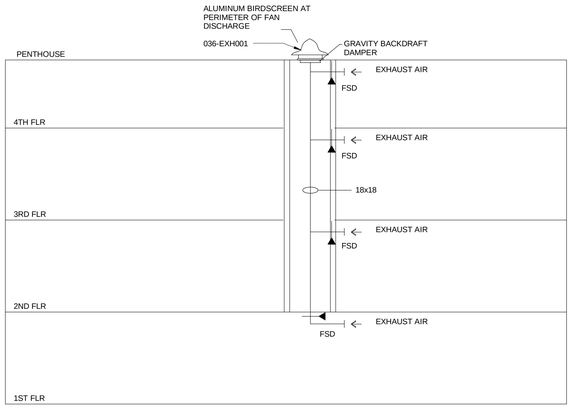

LOBBY TOILET EXHAUST RISER DIAGRAM

NOT TO SCALE

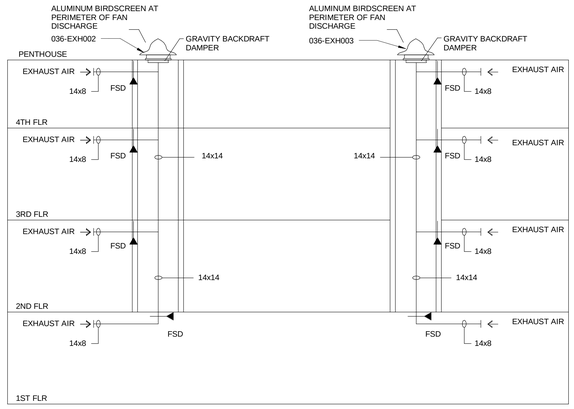

PRINT ROOM AND LOUNGE EXHAUST RISER DIAGRAM

NOT TO SCALE

100% SUBMITTAL

AECOM

AECOM TECHNICAL SERVICES, INC.
3101 WILSON BOULEVARD
SUITE 900
ARLINGTON, VA 22201

T: 703-682-4900 F: 703.682.4901
www.aecom.com

SEAL AREA

STATE OF MARYLAND
PAUL WINFIELD STUTZMAN
No. 13276
REGISTERED
PROFESSIONAL ENGINEER

KEY PLAN

REV	DATE	DESCRIPTION	S&R BR.	CUSTOMER	PM	SECT. HEAD

	INITIALS	DATE
DRAWN BY	Designer	
CHECKED BY	PS	
A-E MANAGER	EW	
ENVIRONMENTAL BRANCH	JH	
SAFETY BRANCH	CS	
CM	MMD	
PM	RWP	
CUSTOMER	JWB	
ENG. BRANCH	DGL	

MECHANICAL RISER DIAGRAMS

M-602

FLIGHT PROJECTS BUILDING

NATIONAL AERONAUTICS AND SPACE ADMINISTRATION

GODDARD SPACE FLIGHT CENTER GREENBELT, MARYLAND
FACILITIES MANAGEMENT DIVISION

DATE ISSUED	CoF CODE OR WR#	AECOM PROJECT NO.	SCALE
10/12/2012	12GXAZ	60187636	1/8" = 1'-0"

FILE DATE: 10/12/2012 9:26:17 AM

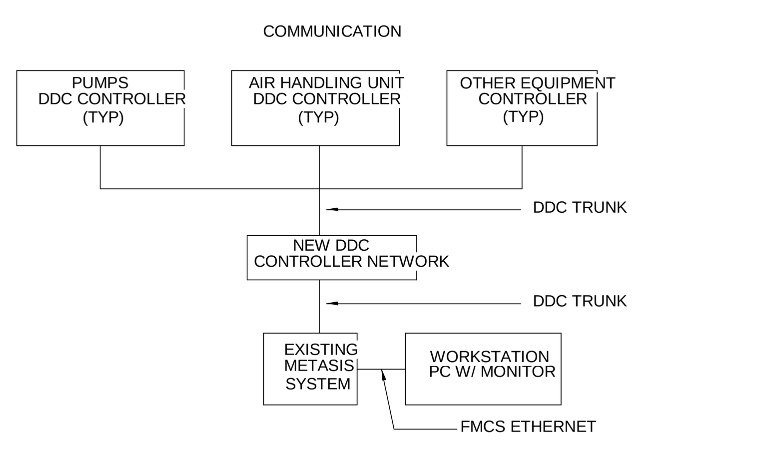

DDC COMMUNICATION NETWORK

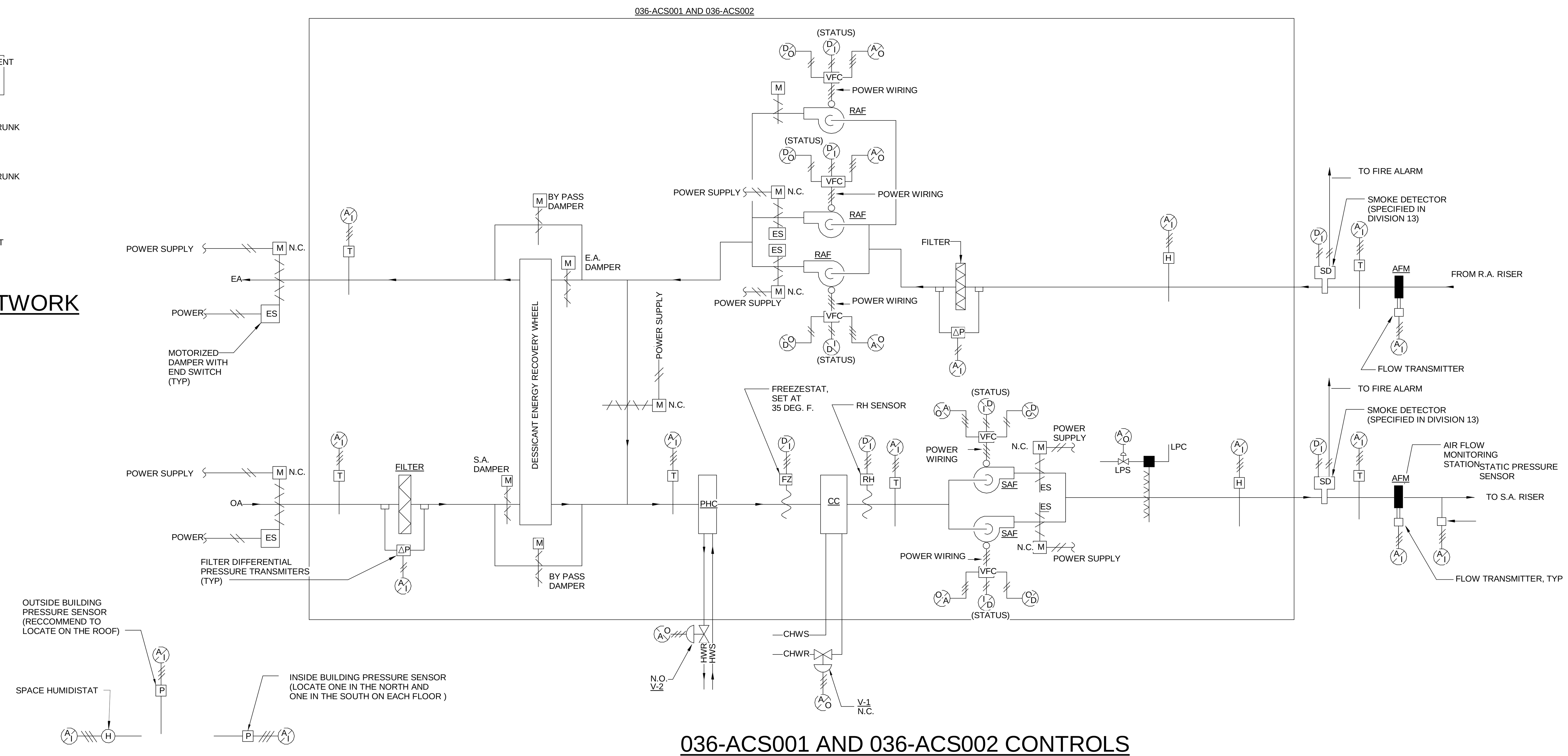

036-ACS001 AND 036-ACS002 CONTROLS

SEQUENCE OF OPERATION:

AIR HANDLING UNIT (ACS):
AIR HANDLER SHALL BE AUTOMATICALLY ACTIVATED BY THE BUILDING AUTOMATION SYSTEM PER PROGRAMMED SCHEDULES. THE BAS SYSTEM SHALL PERFORM THE FOLLOWING ACTIONS BASED ON PROGRAMMABLE SCHEDULE.

SUMMER MORNING COOL DOWN:
DURING SUMMER MORNING COOL DOWN, THE AIR HANDLER SHALL START TO COOL THE INDOOR AIR WITH OUTSIDE AIR DAMPER CLOSED UNTIL THE HUMIDITY LEVEL FALLS TO 50% RH (ADJUSTABLE). DURING THIS TIME THE HIGH TEMPERATURE CHILLED WATER SYSTEM SHALL REMAIN OFF UNTIL NORMAL OCCUPIED MODE TO ACTIVATE.

OCCUPIED:
1. OPEN OUTSIDE AND EXHAUST AIR DAMPERS WHEN AIR HANDLER IS ACTIVATED AND INDEXED INTO OCCUPIED MODE.
2. ENERGIZE SUPPLY AIR FAN (SAF) AND ASSOCIATED VARIABLE FREQUENCY CONTROLLER ONCE OUTSIDE AND EXHAUST AIR DAMPERS ARE PROVEN OPEN.
3. ENERGIZE RETURN AIR FAN (RAF) AND ASSOCIATED VARIABLE FREQUENCY CONTROLLER ONCE SUPPLY AIR FAN IS PROVEN ON.
4. START ROTATING THE ENERGY RECOVERY WHEEL ONCE RETURN AIR FAN IS PROVEN.
5. MODULATE SUPPLY FAN'S VARIABLE FREQUENCY CONTROLLER TO MAINTAIN STATIC AIR PRESSURE SETPOINT AT 1.0 INCH WATER GAUGE (ADJUSTABLE).
6. MODULATE RETURN AIR FAN'S VARIABLE FREQUENCY CONTROLLER TO MAINTAIN AIR PRESSURE DIFFERENTIAL BETWEEN INSIDE BUILDING AND OUTSIDE TO 0.03 INCH WATER GAUGE (ADJUSTABLE).
7. MODULATE CHILLED WATER CONTROL VALVE TO MAINTAIN SUPPLY AIR SETPOINT AT 52°F (ADJUSTABLE)
8. MODULATE HEATING WATER CONTROL VALVE TO MAINTAIN SUPPLY AIR SETPOINT AT 52°F (ADJUSTABLE)
9. WHEN THE SYSTEM DETECTS THE CO2 LEVEL IN ANY SPACE RAISED ABOVE 800PPM (ADJUSTABLE) LIMIT, THE OUTSIDE AIR DAMPER SHALL MODULATE OPEN TO ITS MAXIMUM SETTING.
10. WHEN CO2 LEVEL IN ALL SPACE FALL BELOW THE SETTLING LEVEL FOR AT LEAST 10 MINUTES OUTSIDE AIR DAMPER SHALL CLOSE DOWN TO ITS MINIMUM SETTING.
11. ALARM SHALL BE ISSUED AT THE FACILITY WORKSTATION, WHEN CO2 LEVEL IN ANY SPACE REACHED 1300PPM.

UNOCCUPIED MODE:
1. DURING UNOCCUPIED MODE THE AIR HANDLER SHALL BE DE-ENERGIZED AND CALLED TO RUN TO MAINTAIN THE INSIDE AIR TEMPERATURE AT 80F (AJDUSTABLE) SUMMER AND 60F (ADJUSTABLE) WINTER.
2. ALL OUTSIDE AIR AND EXHAUST AIR DAMPERS ARE CLOSED DURING UNOCCUPIED MODE.
3. CLOSE HEATING AND CHILLED WATER CONTROL VALVES WHEN ALL ASSOCIATED AIR HANDLER'S ARE INDEXED INTO UNOCCUPIED MODE.
4. STOP ROTATING THE ENERGY RECOVERY WHEEL.
5. DE-ENERGIZE RETURN AIR FAN AND ASSOCIATED VARIABLE FREQUENCY CONTROLLER.
6. DE-ENERGIZE SUPPLY FAN AND ASSOCIATED VARIABLE FREQUENCY CONTROLLER.

ECONOMIZER:
THE ECONOMIZER BYPASS CYCLE SUSPENDS ENERGY RECOVERY TO USE COOL OUTSIDE AIR FOR BUILDING COOLING. THE CYCLE OCCURS WHEN THE OUTDOOR ENTHALPY IS BELOW THE RETURN AIR ENTHALPY (30 BTU/LB). THE FOLLOWING ACTIONS DESCRIBE THE CYCLE WHEN OUTDOOR TEMPERATURES ARE FAILING. THE REVERSE IS TO OCCUR AS TEMPERATURES RISER. MODULATE BYPASS DAMPERS TO MAINTAIN THE SUPPLY AIR TEMPERATURE AT SETPOINT, 52F (ADJUSTABLE)

AIR HANDLER SEQUENCE
1. THE SUPPLY AND RETURN FANS SHALL MODULATE DOWN TO MINIMUM SETTINGS WHEN AIR HANDLER ENTERS ECONOMIZER MODE.
2. OPEN BYPASS DAMPERS ONCE FANS ARE AT MINIMUM SPEED.
3. CLOSE THE UNIT'S INTERNAL SUPPLY AIR AND EXHAUST AIR DAMPERS ONCE THE BYPASS DAMPERS ARE OPEN.
4. DE-ENERGIZE THE HEAT RECOVERY WHEEL ONCE THE INTERNAL SUPPLY AND EXHAUST AIR DAMPERS ARE CLOSED.
5. THE HEATING AND CHILLED WATER COILS SHALL RESPOND AS DESCRIBED IN THE OCCUPIED MODE.
6. OPEN THE UNIT'S INTERNAL SUPPLY AIR AND EXHAUST AIR DAMPERS WHEN AIR HANDLING UNITS ARE INDEXED OUT OF AIR ECONOMIZER MODE.
7. ENERGIZE THE HEAT RECOVERY WHEEL ONCE THE INTERNAL DAMPERS ARE OPEN.
8. CLOSE THE BYPASS DAMPERS ONE THE INTERNAL DAMPERS ARE OPEN.

FROST PREVENTION:
THE AIR HANDLER SHALL BE EQUIPPED WITH A FACTORY SEQUENCE TO PREVENT FROST FORMATION ON THE ENERGY RECOVERY WHEEL FROM THE EXHAUST AIR FLOW.
1. SLOW THE ROTATION OF THE WHEEL WHEN THE EXHAUST AIR TEMPERATURE FALLS BELOW ADJUSTABLE SETPOINT (35°F).
2. INCREASE THE ROTATION OF THE WHEEL WHEN THE EXHAUST AIR TEMPERATURE RISES ABOVE ADJUSTABLE SETPOINT (38°F).

HUMIDIFICATION CONTROL:
ON A FALL IN ANY SPACE RELATIVE HUMIDITY LEVEL TO LESS THAN 2% BELOW SETPOINT (35%, ADJUSTABLE) THE HUMIDITY SENSOR LOCATION DOWN STREAM OF THE HUMIDIFIER SHALL MODULATE THE STEAM CONTROL VALVE TO MAINTAIN THE RELATIVE HUMIDITY WITHIN 10% OF SETPOINT. WHEN ALL SPACE RELATIVE HUMIDITY LEVEL ARE MET, THE STEAM CONTROL VALVE SHALL MODULATE CLOSED.

COMPONENT FAILURE (SUPPLY FAN, RETURN FAN, OR WHEEL):
1. ISSUE A CALL TO START COMPONENT.
2. STATUS DOES NOT CONFIRM START AFTER AN ADJUSTABLE DELAY.
3. ISSUE AHU COMPONENT FAILURE ALARM.
4. LOCK OUT AHU (FANS, WHEEL, COIL, AND VFC'S)
5. CLOSE AHU'S OUTSIDE AND EXHAUST AIR DAMPERS.

ALARMS AND SAFETIES:
SMOKE ALARM (SUPPLY AND RETURN)
1. INITIATE ALARM AT BAS AND FIRE ALARM SYSTEM IF SMOKE IS DETECTED EITHER SUPPLY OR RETURN AIR DUCT.
2. DE-ENERGIZE SUPPLY FAN AND ASSOCIATED VARIABLE FREQUENCY CONTROLLER.
3. DE-ENERGIZE EXHAUST AIR FAN AND ASSOCIATED VARIABLE FREQUENCY CONTROLLER.
4. STOP ROTATING THE ENERGY RECOVERY WHEEL.
5. CLOSE OUTSIDE AIR DAMPER.
6. CLOSE EXHAUST AIR DAMPER.
7. CLOSE COOLING COIL CONTROL VALVE
8. INITIATE STARTUP SEQUENCE AS INDICATED UNDER OCCUPIED WHEN SUPPLY (EXHAUST) AIR SMOKE DETECTOR IS MANUALLY RESET.

FREEZE PROTECTON
1. INITIATE ALARM AT BAS IF SUPPLY AIR TEMPERATURE FALLS BELOW THE FREEZE STAT'S ADJUSTABLE SETPOINT (34).
2. DE-ENERGIZE SUPPLY FAN AND ASSOCIATED VARIABLE FREQUENCY CONTROLLER.
3. DE-ENERGIZE EXHAUST AIR FAN AND ASSOCIATED VARIABLE FREQUENCY CONTROLLER.
4. STOP ROTATING THE ENERGY RECOVERY WHEEL.
5. CLOSE OUTSIDE AIR DAMPER.
6. CLOSE EXHAUST AIR DAMPER.
7. CLOSE COOLING COIL CONTROL VALVE.
8. OPEN HEATING COIL CONTROL VALVE.
9. INITIATE STARTUP SEQUENCE AS INDICATED UNDER OCCUPIED WHEN FREEZE STAT IS MANUALLY RESET.

HIGH STATIC PRESSURE ALARM
1. INITIATE ALARM IF DIFFERENTIAL PRESSURE ACROSS SUPPLY (EXHAUST) AIR FAN EXCEEDS ADJUSTABLE LIMIT (5 INCH WATER GAUGE)
2. DE-ENERGIZE SUPPLY AND EXHAUST AIR FANS AND ASSOCIATED VARIABLE FREQUENCY CONTROLLERS.
3. CLOSE OUTSIDE AND EXHAUST AIR DAMPERS.
4. CLOSE COOLING COIL CONTROL VALVE
5. INITIATE STARTUP SEQUENCE AS INDICATED UNDER OCCUPIED WHEN DIFFERENTIAL PRESSURE SWITCH IS MANUALLY RESET.

FILTER ALARM
1. INITIATE ALARM IF DIFFERENTIAL PRESSURE ACROSS AIR FILTER EXCEEDS ADJUSTABLE LIMIT (1 INCH WATER GAUGE).
2. CLEAR ALARM IF DIFFERENTIAL PRESSURE ACROSS AIR FILTER FALLS BELOW ADJUSTAB..E LIMIT

DDC INPUT/OUTPUT SUMMARY

POINT DESCRIPTION	INPUT		OUTPUT		REMARKS
	ANALOG	DIGITAL	ANALOG	DIGITAL	
036-ACS001					
SUPPLY FAN (2)					
VFD H-A STATUS-AUTO POSITION		●			CONTACT CLOSURE
VFD RUN STATUS		●			
VFD FAULT STATUS		●			
VFD RUN/STOP COMMAND				●	
VFD FAULT RESET				●	
FAN MOTOR CURRENT SENSOR		●			
VFD FREQUENCY/SPEED	●		●		4-20mA
RETURN FANS (2)					
VFD H-A STATUS-AUTO POSITION		●			CONTACT CLOSURE
VFD RUN STATUS		●			
VFD FAULT STATUS		●			
VFD RUN/STOP COMMAND				●	
VFD FAULT RESET				●	
FAN MOTOR CURRENT SENSOR		●			
VFD FREQUENCY/SPEED	●		●		4-20mA
ENERGY WHEEL					
VFD H-A STATUS-AUTO POSITION		●			CONTACT CLOSURE
VFD RUN STATUS		●			
VFD FAULT STATUS		●			
VFD RUN/STOP COMMAND				●	
VFD FAULT RESET				●	
DIFFERENTIAL PRESS SWITCH		●			
VFD FREQUENCY/SPEED	●		●		4-20mA

DDC INPUT/OUTPUT SUMMARY, CONT.

SUPPLY AIR					
TEMPERATURE	●				4-20mA
FLOW RATE	●				
PRESSURE	●				
SMOKE DETECTION		●			CONTACT CLOSURE
RETURN AIR					4-20mA
TEMPERATURE	●				
FLOW RATE	●				
CARBON DIOXIDE	●				
SMOKE DETECTION		●			CONTACT CLOSURE
OUTSIDE AIR					
TEMPERATURE	●				4-20mA
FLOWRATE	●				
O.A. FILTER DELTA P	●				
MIXED AIR TEMPERATURE	●				
PREHEAT COIL					
DISCHARGE AIR TEMPERATURE	●				
LOW TEMPERATURE SWITCH		●			CONTACT CLOSURE
O.A. DAMPER OPEN/CLOSE	●	●	●		4-20mA
MIN OSA DAMPER	●	●	●		
RETURN AIR DAMPER	●	●	●		
RELIEF AIR DAMPER	●	●	●		
SA SMOKE DAMPER OPEN		●		●	CONTACT CLOSURE
RA SMOKE DAMPER OPEN		●		●	CONTACT CLOSURE
FILTERS DELTA P	●				4-20mA
CHW COIL VALVE			●		
HHW COIL VALVE			●		
CHWS FLOWRATE	●				
CHWR TEMPERATURE	●				
HWS FLOWRATE	●				
HWR TEMPERATURE	●				
STEAM CONTROL VALVE			●		
HUMIDITY SENSOR	●				
036-ACS002					
SUPPLY FAN (2)					
VFD H-A STATUS-AUTO POSITION		●			CONTACT CLOSURE
VFD RUN STATUS		●			
VFD FAULT STATUS		●			
VFD RUN/STOP COMMAND					
VFD FAULT RESET				●	
FAN MOTOR CURRENT SENSOR		●			
VFD FREQUENCY/SPEED	●		●		4-20mA
RETURN FAN (2)					
VFD H-A STATUS-AUTO POSITION		●			CONTACT CLOSURE
VFD RUN STATUS		●			
VFD FAULT STATUS		●			
VFD RUN/STOP COMMAND				●	
VFD FAULT RESET				●	
FAN MOTOR CURRENT SENSOR		●			
VFD FREQUENCY/SPEED	●		●		4-20mA
ENERGY WHEEL					
VFD H-A STATUS-AUTO POSITION		●			CONTACT CLOSURE
VFD RUN STATUS		●			
VFD FAULT STATUS		●			
VFD RUN/STOP COMMAND				●	
VFD FAULT RESET				●	
DIFFERENTIAL PRESS SWITCH		●			
VFD FREQUENCY/SPEED	●		●		4-20mA
SUPPLY AIR					
TEMPERATURE	●				4-20mA
FLOW RATE	●				
PRESSURE	●				
SMOKE DETECTION		●			CONTACT CLOSURE
RETURN AIR					4-20mA
TEMPERATURE	●				
FLOW RATE	●				
CARBON DIOXIDE	●				
SMOKE DETECTION		●			CONTACT CLOSURE
OUTSIDE AIR					
TEMPERATURE	●				4-20mA
FLOWRATE	●				
O.A. FILTER DELTA P	●				
MIXED AIR TEMPERATURE	●				
PREHEAT COIL					
DISCHARGE AIR TEMPERATURE	●				
LOW TEMPERATURE SWITCH		●			CONTACT CLOSURE
OSA DAMPER OPEN/CLOSE	●	●	●		4-20mA
MIN OSA DAMPER	●	●	●		
RETURN AIR DAMPER	●	●	●		
RELIEF AIR DAMPER	●	●	●		
SA SMOKE DAMPER OPEN		●		●	CONTACT CLOSURE
RA SMOKE DAMPER OPEN		●		●	CONTACT CLOSURE
FILTERS DELTA P	●				4-20mA
CHW COIL VALVE			●		
HHW COIL VALVE			●		
CHWS FLOWRATE	●				
CHWR TEMPERATURE	●				
HWS FLOWRATE	●				
HWR TEMPERATURE	●				
STEAM CONTROL VALVE			●		
HUMIDITY SENSOR	●				

100% SUBMITTAL

AECOM

AECOM TECHNICAL SERVICES, INC.
3101 WILSON BOULEVARD
SUITE 900
ARLINGTON, VA 22201

T: 703-682-4900 F: 703.682.4901
www.aecom.com

SEAL AREA

STATE OF MARYLAND
PAUL ANDREW SABATIUK
No. 13276
REGISTERED PROFESSIONAL ENGINEER

KEY PLAN

REV	DATE	DESCRIPTION	S&R BR.	CUSTOMER	PM	SECT. HEAD

	INITIALS	DATE
DRAWN BY	Designer	
CHECKED BY	PS	
A-E MANAGER	EW	
ENVIRONMENTAL BRANCH	JH	
SAFETY BRANCH	CS	
CM	MMD	
PM	RWP	
CUSTOMER	JWB	
ENG. BRANCH	DGL	

CONTROL SYSTEMS

M-701

FLIGHT PROJECTS BUILDING

NATIONAL AERONAUTICS AND SPACE ADMINISTRATION
GODDARD SPACE FLIGHT CENTER GREENBELT, MARYLAND
FACILITIES MANAGEMENT DIVISION

DATE ISSUED	CoF CODE OR WR#	AECOM PROJECT NO.	SCALE
10/12/2012	12GXAZ	60187636	1/8" = 1'-0"

FILE DATE: 10/12/2012 9:26:20 AM

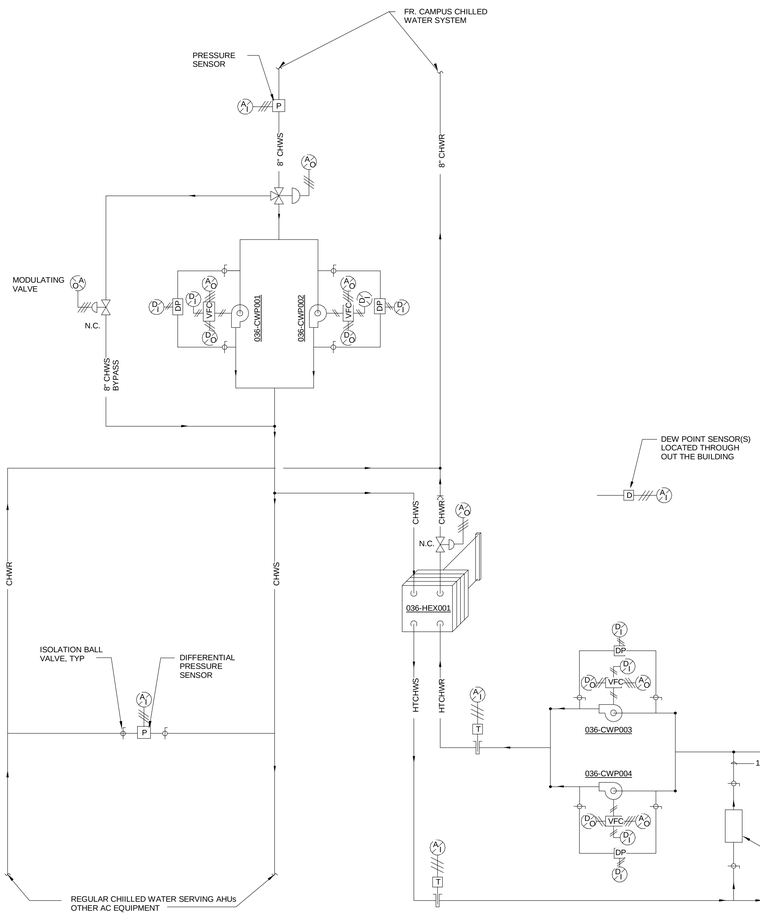

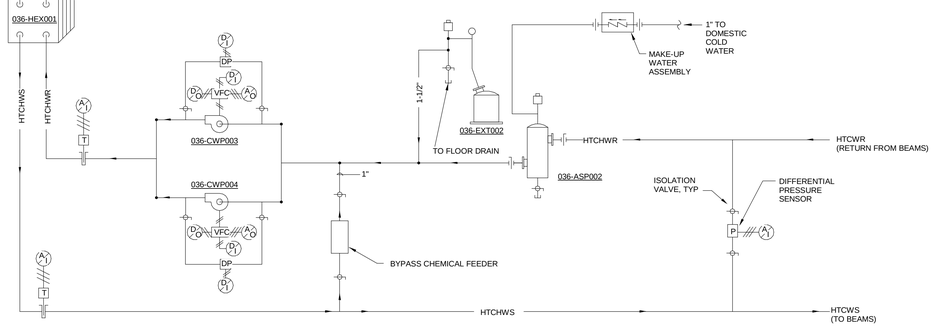

SEQUENCE OF OPERATION:

CHILLED WATER BY-PASS CONTROL:
WHEN THE CHILLED WATER SUPPLY PRESSURE ENTERING THE BUILDING IS DETECED ABOVE 50 PSI (ADJUSTABLE), THE CHILLED WATER PUMPS CWP001 & CWP002 SHALL BE OFF. THE 3-WAY CONTROL VALVE SHALL OPEN THE BY-PASS LINE AND THE MODULATING VALVE SHALL MODULATE TO MAINTAIN THE DIFFERENTIAL PRESSURE AT ITS SETTING (TO BE DETERMINED BY THE TEST AND BALANCING CONTRACTOR).

WHEN THE CHILLED WATER SUPPLY PRESSURE ENTERING THE BUILDING IS DETECED BELOW 50 PSI (ADJUSTABLE), THE CHILLED WATER PUMPS CWP001 & CWP002 SHALL BE ACTIVATED.

CHILLED WATER PUMP CONTROL:
CHILLED WATER PUMPS, CWP001 AND CWP002, ARE DESIGNED WITH ONE RUNNING AND ONE STANDBY. WHEN THERE IS COOLING DEMAND IN THE BUILDING, THE BAS WILL COMMAND THE LEAD PUMP TO RUN.

WHEN ENABLED, THE LEAD PUMP WILL START AND RUN CONTINUOUSLY TO MAINTAIN THE DIFFERENTAIL PRESSURE (DP) SETTING. IF FOR ANY REASON THE LEAD PUMP CAN NOT START AN ALARM WILL BE GENERATED. THE LAG PUMP WILL START. THE LEAD CHILLED WATER PUMP WILL ROTATE TO THE LAG PUMP EVERY SEVEN DAYS OF CONTINUOUS OPERATION TO BALANCE THE RUNTIME ON THE PUMPS.

HIGH TEMPERATURE CHILLED WATER PUMP CONTROL:
CHILLED WATER PUMPS, CWP003 AND CWP004, ARE DESIGNED WITH ONE RUNNING AND ONE STANDBY. WHEN THERE IS COOLING DEMAND IN THE BUILDING, THE BAS WILL COMMAND THE LEAD PUMP TO RUN.

WHEN ENABLED, THE LEAD PUMP WILL START AND RUN CONTINUOUSLY TO MAINTAIN THE DIFFERENTAIL PRESSURE (DP) SETTING. IF FOR ANY REASON THE LEAD PUMP CAN NOT START AN ALARM WILL BE GENERATED. THE LAG PUMP WILL START IF THE LEAD PUMP IS IN ALARM. THE LEAD CHILLED WATER PUMP WILL ROTATE TO THE LAG PUMP EVERY SEVEN DAYS OF CONTINUOUS OPERATION TO BALANCE THE RUNTIME ON THE PUMPS.

HEAT EXCHANGER HEX002 CONTROL:
THE HEAT EXCHANGER CONTROL SEQUENCE WILL BEGIN WHEN ONE OF THE HIGH TEMPERATURE CHILLED WATER PUMPS, CWP003 AND CWP004, HAS A STATUS OF ON. THE CHILLED WATER CONTROL VALVE WILL MODULATE TO MAINTAIN THE HIGH TEMPERATURE CHILLED WATER SUPPLY TEMPERATURE AT 2 DEGREE ABOVE THE HIGHEST SPACE DEW POINT TEMPERATURE. THERE SHALL BE MULTIPLE DEW POINT SENSORS THROUGH OUT THE BUILDING, CONTROL CONTRACTOR TO DEFINED LOCATIONS AS REQUIRED TO HAVE ACCURATE SENSING INCLUDING BOTH ABOVE AND BELOW THE CEILING.

CHILLED WATER CONTROLS

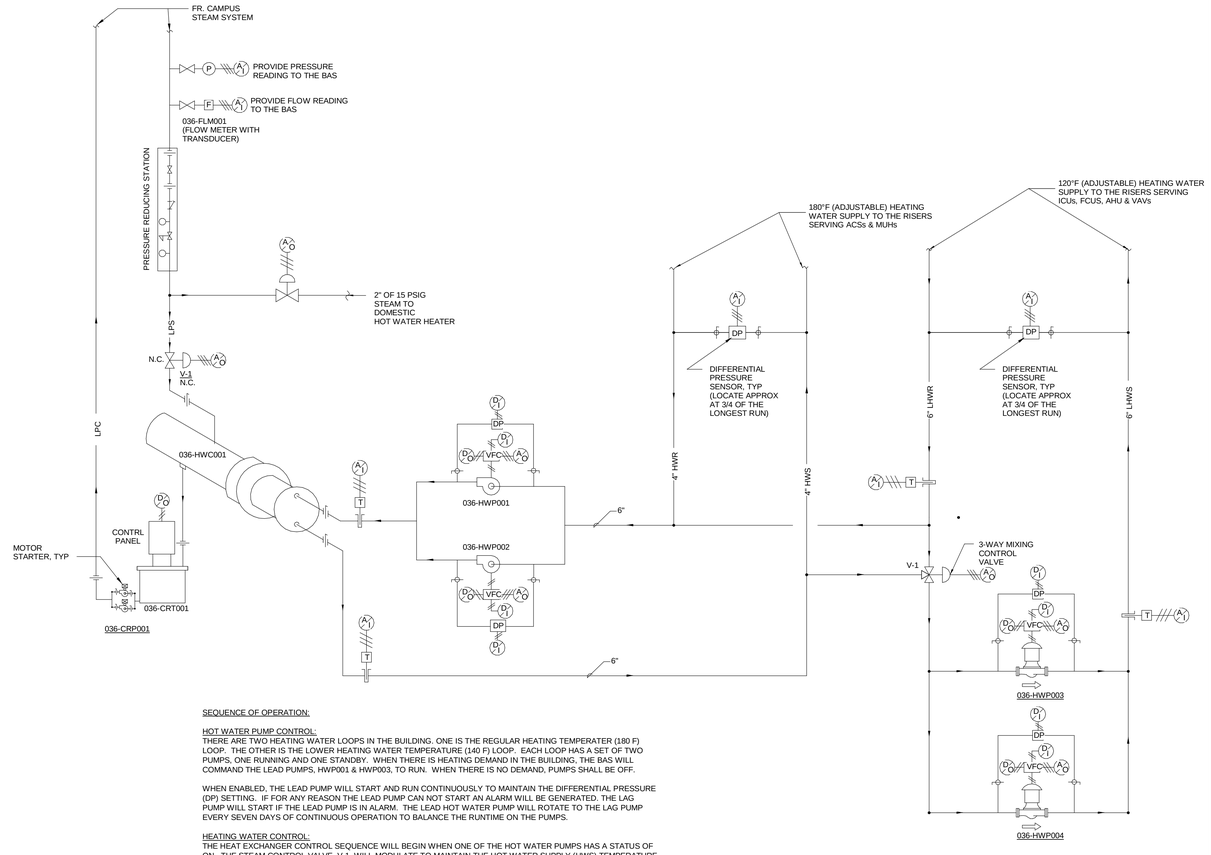

SEQUENCE OF OPERATION:

HOT WATER PUMP CONTROL:
THERE ARE TWO HEATING WATER LOOPS IN THE BUILDING. ONE IS THE REGULAR HEATING TEMPERATER (180 F) LOOP. THE OTHER IS THE LOWER HEATING WATER TEMPERATURE (140 F) LOOP. EACH LOOP HAS A SET OF TWO PUMPS, ONE RUNNING AND ONE STANDBY. WHEN THERE IS HEATING DEMAND IN THE BUILDING, THE BAS WILL COMMAND THE LEAD PUMPS, HWP001 & HWP003, TO RUN. WHEN THERE IS NO DEMAND, PUMPS SHALL BE OFF.

WHEN ENABLED, THE LEAD PUMP WILL START AND RUN CONTINUOUSLY TO MAINTAIN THE DIFFERENTIAL PRESSURE (DP) SETTING. IF FOR ANY REASON THE LEAD PUMP CAN NOT START AN ALARM WILL BE GENERATED. THE LAG PUMP WILL START IF THE LEAD PUMP IS IN ALARM. THE LEAD HOT WATER PUMP WILL ROTATE TO THE LAG PUMP EVERY SEVEN DAYS OF CONTINUOUS OPERATION TO BALANCE THE RUNTIME ON THE PUMPS.

HEATING WATER CONTROL:
THE HEAT EXCHANGER CONTROL SEQUENCE WILL BEGIN WHEN ONE OF THE HOT WATER PUMPS HAS A STATUS OF ON. THE STEAM CONTROL VALVE, V-1, WILL MODULATE TO MAINTAIN THE HOT WATER SUPPLY (HWS) TEMPERATURE AT A SETPOINT 180 F (ADJUSTABLE). THE LOWER HEATING WATER SUPPLY (LHWS) SHALL MODULATE THE 3-WAY CONTROL VALVES, V-1, TO MAINTAIN THE SUPPLY WATER TEMPERATURE AT ITS SETPOINT 140 F (ADJUSTABLE).

THE STEAM FLOW METER (FML001) AND THE STEAM PRESSURE TRANSDUCER SHALL PROVIDE THEIR READINGS TO THE OPERATOR WORKSTATION . READING DATA SHALL ALSO BE RECORDED AND STORED AT THE END OF EACH CALENDAR MONTH (AJUSTABLE).

HEATING WATER TEMPERATURES RESET SCHEDULE
THE BAS SHALL BE USING THE EXISTING CAMPUS WEATHER STATION TO RESET THE HEATING WATER TEMPERATURES AS FOLLOWS:

HOT WATER TEMPERATURE RESET SCHEDULE.

O.A. TEMPERATURE °F	HWS TEMPERATURE °F	LHWS TEMPERATURE °F
22	180	140
70	140	110

HEATING WATER SYSTEM CONTROLS

100% SUBMITTAL

AECOM
AECOM TECHNICAL SERVICES, INC.
3101 WILSON BOULEVARD
SUITE 900
ARLINGTON, VA 22201
T: 703-682-4900 F: 703.682.4901
www.aecom.com

SEAL AREA

STATE OF MARYLAND
PAUL STUART BARTHOLOMEW
No. 13276
REGISTERED PROFESSIONAL ENGINEER

KEY PLAN

REV	DATE	DESCRIPTION	S&R BR.	CUSTOMER	PM	SECT. HEAD

	INITIALS	DATE
DRAWN BY	Designer	
CHECKED BY	PS	
A-E MANAGER	EW	
ENVIRONMENTAL BRANCH	JH	
SAFETY BRANCH	CS	
CM	MMD	
PM	RWP	
CUSTOMER	JWB	
ENG. BRANCH	DGL	

CONTROLS SYSTEMS

M-702

FLIGHT PROJECTS BUILDING

NATIONAL AERONAUTICS AND SPACE ADMINISTRATION
GODDARD SPACE FLIGHT CENTER GREENBELT, MARYLAND
FACILITIES MANAGEMENT DIVISION

DATE ISSUED	CoF CODE OR WR#	AECOM PROJECT NO.	SCALE
10/12/2012	12GXAZ	60187636	1/8" = 1'-0"

FILE DATE: 10/12/2012 9:26:23 AM

DDC INPUT/OUTPUT SUMMARY

	INPUT		OUTPUT		REMARKS
POINT DESCRIPTION	ANALOG	DIGITAL	ANALOG	DIGITAL	
036-VAV001001					
SPACE TEMPERATURE	●				4-20mA
SUPPLY AIR DUCT TEMPERATURE	●				CONTACT CLOSURE
SUPPLY AIR DUCT FLOW RATE	●				4-20mA
VAV DAMPER			●		
HW COIL VALVE			●		
036-VAV001002					
SPACE TEMPERATURE	●				4-20mA
SUPPLY AIR DUCT TEMPERATURE	●				CONTACT CLOSURE
SUPPLY AIR DUCT FLOW RATE	●				4-20mA
VAV DAMPER			●		
HW COIL VALVE			●		
036-VAV001003					
SPACE TEMPERATURE	●				4-20mA
SUPPLY AIR DUCT TEMPERATURE	●				CONTACT CLOSURE
SUPPLY AIR DUCT FLOW RATE	●				4-20mA
VAV DAMPER			●		
HW COIL VALVE			●		
036-VAV001004					
SPACE TEMPERATURE	●				4-20mA
SUPPLY AIR DUCT TEMPERATURE	●				CONTACT CLOSURE
SUPPLY AIR DUCT FLOW RATE	●				4-20mA
VAV DAMPER			●		
HW COIL VALVE			●		
036-VAV001005					
SPACE TEMPERATURE	●				4-20mA
SUPPLY AIR DUCT TEMPERATURE	●				CONTACT CLOSURE
SUPPLY AIR DUCT FLOW RATE	●				4-20mA
VAV DAMPER			●		
HW COIL VALVE			●		
036-VAV001006					
SPACE TEMPERATURE	●				4-20mA
SUPPLY AIR DUCT TEMPERATURE	●				CONTACT CLOSURE
SUPPLY AIR DUCT FLOW RATE	●				4-20mA
VAV DAMPER			●		
HW COIL VALVE			●		
036-VAV001007					
SPACE TEMPERATURE	●				4-20mA
SUPPLY AIR DUCT TEMPERATURE	●				CONTACT CLOSURE
SUPPLY AIR DUCT FLOW RATE	●				4-20mA
VAV DAMPER			●		
HW COIL VALVE			●		
036-VAV001008					
SPACE TEMPERATURE	●				4-20mA
SUPPLY AIR DUCT TEMPERATURE	●				CONTACT CLOSURE
SUPPLY AIR DUCT FLOW RATE	●				4-20mA
VAV DAMPER			●		
HW COIL VALVE			●		
036-VAV001009					
SPACE TEMPERATURE	●				4-20mA
SUPPLY AIR DUCT TEMPERATURE	●				CONTACT CLOSURE
SUPPLY AIR DUCT FLOW RATE	●				4-20mA
VAV DAMPER			●		
HW COIL VALVE			●		
036-VAV001010					
SPACE TEMPERATURE	●				4-20mA
SUPPLY AIR DUCT TEMPERATURE	●				CONTACT CLOSURE
SUPPLY AIR DUCT FLOW RATE	●				4-20mA
VAV DAMPER			●		
HW COIL VALVE			●		
036-VAV001011					
SPACE TEMPERATURE	●				4-20mA
SUPPLY AIR DUCT TEMPERATURE	●				CONTACT CLOSURE
SUPPLY AIR DUCT FLOW RATE	●				4-20mA
VAV DAMPER			●		
HW COIL VALVE			●		
036-VAV001012					
SPACE TEMPERATURE	●				4-20mA
SUPPLY AIR DUCT TEMPERATURE	●				CONTACT CLOSURE
SUPPLY AIR DUCT FLOW RATE	●				4-20mA
VAV DAMPER			●		
HW COIL VALVE			●		

DDC INPUT/OUTPUT SUMMARY

	INPUT		OUTPUT		REMARKS
POINT DESCRIPTION	ANALOG	DIGITAL	ANALOG	DIGITAL	
036-VAV001013					
SPACE TEMPERATURE	●				4-20mA
SUPPLY AIR DUCT TEMPERATURE	●				CONTACT CLOSURE
SUPPLY AIR DUCT FLOW RATE	●				4-20mA
VAV DAMPER			●		
HW COIL VALVE			●		
036-VAV001014					
SPACE TEMPERATURE	●				4-20mA
SUPPLY AIR DUCT TEMPERATURE	●				CONTACT CLOSURE
SUPPLY AIR DUCT FLOW RATE	●				4-20mA
VAV DAMPER			●		
HW COIL VALVE			●		
036-VAV001015					
SPACE TEMPERATURE	●				4-20mA
SUPPLY AIR DUCT TEMPERATURE	●				CONTACT CLOSURE
SUPPLY AIR DUCT FLOW RATE	●				4-20mA
VAV DAMPER			●		
HW COIL VALVE			●		
036-VAV001016					
SPACE TEMPERATURE	●				4-20mA
SUPPLY AIR DUCT TEMPERATURE	●				CONTACT CLOSURE
SUPPLY AIR DUCT FLOW RATE	●				4-20mA
VAV DAMPER			●		
HW COIL VALVE			●		
036-VAV001017					
SPACE TEMPERATURE	●				4-20mA
SUPPLY AIR DUCT TEMPERATURE	●				CONTACT CLOSURE
SUPPLY AIR DUCT FLOW RATE	●				4-20mA
VAV DAMPER			●		
HW COIL VALVE			●		
036-VAV001018					
SPACE TEMPERATURE	●				4-20mA
SUPPLY AIR DUCT TEMPERATURE	●				CONTACT CLOSURE
SUPPLY AIR DUCT FLOW RATE	●				4-20mA
VAV DAMPER			●		
HW COIL VALVE			●		
036-VAV001019					
SPACE TEMPERATURE	●				4-20mA
SUPPLY AIR DUCT TEMPERATURE	●				CONTACT CLOSURE
SUPPLY AIR DUCT FLOW RATE	●				4-20mA
VAV DAMPER			●		
HW COIL VALVE			●		
036-VAV001020					
SPACE TEMPERATURE	●				4-20mA
SUPPLY AIR DUCT TEMPERATURE	●				CONTACT CLOSURE
SUPPLY AIR DUCT FLOW RATE	●				4-20mA
VAV DAMPER			●		
HW COIL VALVE			●		
036-VAV001021					
SPACE TEMPERATURE	●				4-20mA
SUPPLY AIR DUCT TEMPERATURE	●				CONTACT CLOSURE
SUPPLY AIR DUCT FLOW RATE	●				4-20mA
VAV DAMPER			●		
HW COIL VALVE			●		
036-VAV001022					
SPACE TEMPERATURE	●				4-20mA
SUPPLY AIR DUCT TEMPERATURE	●				CONTACT CLOSURE
SUPPLY AIR DUCT FLOW RATE	●				4-20mA
VAV DAMPER			●		
HW COIL VALVE			●		
036-VAV002001					
SPACE TEMPERATURE	●				4-20mA
SUPPLY AIR DUCT TEMPERATURE	●				CONTACT CLOSURE
SUPPLY AIR DUCT FLOW RATE	●				4-20mA
VAV DAMPER			●		
HW COIL VALVE			●		
036-VAV002002					
SPACE TEMPERATURE	●				4-20mA
SUPPLY AIR DUCT TEMPERATURE	●				CONTACT CLOSURE
SUPPLY AIR DUCT FLOW RATE	●				4-20mA
VAV DAMPER			●		
HW COIL VALVE			●		

DDC INPUT/OUTPUT SUMMARY

	INPUT		OUTPUT		REMARKS
POINT DESCRIPTION	ANALOG	DIGITAL	ANALOG	DIGITAL	
036-VAV002003					
SPACE TEMPERATURE	●				4-20mA
SUPPLY AIR DUCT TEMPERATURE	●				CONTACT CLOSURE
SUPPLY AIR DUCT FLOW RATE	●				4-20mA
VAV DAMPER			●		
HW COIL VALVE			●		
036-VAV002004					
SPACE TEMPERATURE	●				4-20mA
SUPPLY AIR DUCT TEMPERATURE	●				CONTACT CLOSURE
SUPPLY AIR DUCT FLOW RATE	●				4-20mA
VAV DAMPER			●		
HW COIL VALVE			●		
036-VAV002005					
SPACE TEMPERATURE	●				4-20mA
SUPPLY AIR DUCT TEMPERATURE	●				CONTACT CLOSURE
SUPPLY AIR DUCT FLOW RATE	●				4-20mA
VAV DAMPER			●		
HW COIL VALVE			●		
036-VAV002006					
SPACE TEMPERATURE	●				4-20mA
SUPPLY AIR DUCT TEMPERATURE	●				CONTACT CLOSURE
SUPPLY AIR DUCT FLOW RATE	●				4-20mA
VAV DAMPER			●		
HW COIL VALVE			●		
036-VAV002007					
SPACE TEMPERATURE	●				4-20mA
SUPPLY AIR DUCT TEMPERATURE	●				CONTACT CLOSURE
SUPPLY AIR DUCT FLOW RATE	●				4-20mA
VAV DAMPER			●		
HW COIL VALVE			●		
036-VAV002008					
SPACE TEMPERATURE	●				4-20mA
SUPPLY AIR DUCT TEMPERATURE	●				CONTACT CLOSURE
SUPPLY AIR DUCT FLOW RATE	●				4-20mA
VAV DAMPER			●		
HW COIL VALVE			●		
036-VAV002009					
SPACE TEMPERATURE	●				4-20mA
SUPPLY AIR DUCT TEMPERATURE	●				CONTACT CLOSURE
SUPPLY AIR DUCT FLOW RATE	●				4-20mA
VAV DAMPER			●		
HW COIL VALVE			●		
036-VAV002010					
SPACE TEMPERATURE	●				4-20mA
SUPPLY AIR DUCT TEMPERATURE	●				CONTACT CLOSURE
SUPPLY AIR DUCT FLOW RATE	●				4-20mA
VAV DAMPER			●		
HW COIL VALVE			●		
036-VAV002011					
SPACE TEMPERATURE	●				4-20mA
SUPPLY AIR DUCT TEMPERATURE	●				CONTACT CLOSURE
SUPPLY AIR DUCT FLOW RATE	●				4-20mA
VAV DAMPER			●		
HW COIL VALVE			●		
036-VAV002012					
SPACE TEMPERATURE	●				4-20mA
SUPPLY AIR DUCT TEMPERATURE	●				CONTACT CLOSURE
SUPPLY AIR DUCT FLOW RATE	●				4-20mA
VAV DAMPER			●		
HW COIL VALVE			●		
036-VAV002013					
SPACE TEMPERATURE	●				4-20mA
SUPPLY AIR DUCT TEMPERATURE	●				CONTACT CLOSURE
SUPPLY AIR DUCT FLOW RATE	●				4-20mA
VAV DAMPER			●		
HW COIL VALVE			●		
036-VAV002014					
SPACE TEMPERATURE	●				4-20mA
SUPPLY AIR DUCT TEMPERATURE	●				CONTACT CLOSURE
SUPPLY AIR DUCT FLOW RATE	●				4-20mA
VAV DAMPER			●		
HW COIL VALVE			●		

DDC INPUT/OUTPUT SUMMARY

	INPUT		OUTPUT		REMARKS
POINT DESCRIPTION	ANALOG	DIGITAL	ANALOG	DIGITAL	
036-VAV002015					
SPACE TEMPERATURE	●				4-20mA
SUPPLY AIR DUCT TEMPERATURE	●				CONTACT CLOSURE
SUPPLY AIR DUCT FLOW RATE	●				4-20mA
VAV DAMPER			●		
HW COIL VALVE			●		
036-VAV002016					
SPACE TEMPERATURE	●				4-20mA
SUPPLY AIR DUCT TEMPERATURE	●				CONTACT CLOSURE
SUPPLY AIR DUCT FLOW RATE	●				4-20mA
VAV DAMPER			●		
HW COIL VALVE			●		
036-VAV002017					
SPACE TEMPERATURE	●				4-20mA
SUPPLY AIR DUCT TEMPERATURE	●				CONTACT CLOSURE
SUPPLY AIR DUCT FLOW RATE	●				4-20mA
VAV DAMPER			●		
HW COIL VALVE			●		
036-VAV002018					
SPACE TEMPERATURE	●				4-20mA
SUPPLY AIR DUCT TEMPERATURE	●				CONTACT CLOSURE
SUPPLY AIR DUCT FLOW RATE	●				4-20mA
VAV DAMPER			●		
HW COIL VALVE			●		
036-VAV002019					
SPACE TEMPERATURE	●				4-20mA
SUPPLY AIR DUCT TEMPERATURE	●				CONTACT CLOSURE
SUPPLY AIR DUCT FLOW RATE	●				4-20mA
VAV DAMPER			●		
HW COIL VALVE			●		
036-VAV002020					
SPACE TEMPERATURE	●				4-20mA
SUPPLY AIR DUCT TEMPERATURE	●				CONTACT CLOSURE
SUPPLY AIR DUCT FLOW RATE	●				4-20mA
VAV DAMPER			●		
HW COIL VALVE			●		
036-VAV002021					
SPACE TEMPERATURE	●				4-20mA
SUPPLY AIR DUCT TEMPERATURE	●				CONTACT CLOSURE
SUPPLY AIR DUCT FLOW RATE	●				4-20mA
VAV DAMPER			●		
HW COIL VALVE			●		
036-VAV002022					
SPACE TEMPERATURE	●				4-20mA
SUPPLY AIR DUCT TEMPERATURE	●				CONTACT CLOSURE
SUPPLY AIR DUCT FLOW RATE	●				4-20mA
VAV DAMPER			●		
HW COIL VALVE			●		

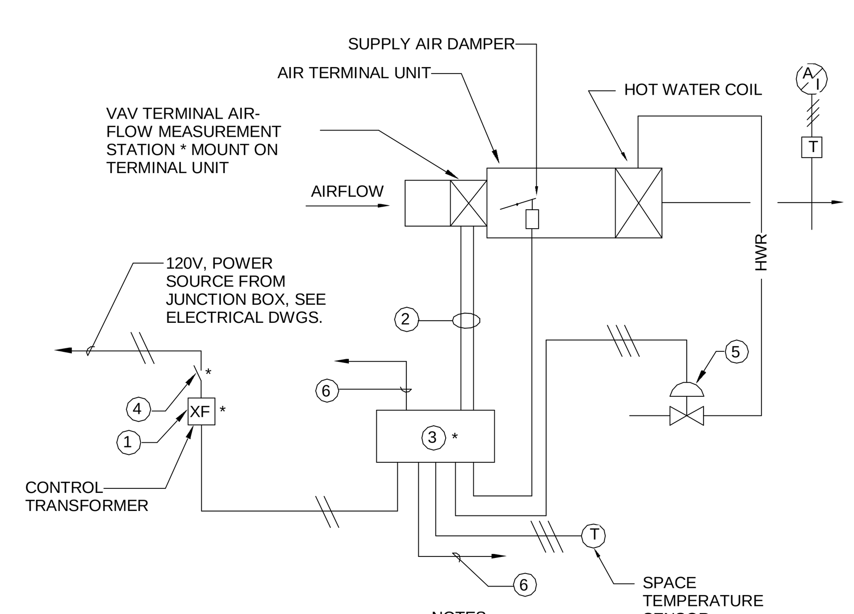

SEQUENCE OF OPERATION:
THE DDC CONTROLLER SHALL RECEIVE SIGNALS FROM THE SPACE TEMPERATURE SENSOR AND SHALL MODULATE THE TERMINAL UNIT SUPPLY DAMPER IN SEQUENCE WITH THE HOT WATER VALVE TO MAINTAIN THE DESIRED SPACE CONDITIONS. THE DDC CONTROLLER SHALL PROVIDE PRESSURE INDEPENDENT VARIABLE/ CONSTANT VOLUME CONTROL AND SHALL BE ADJUSTED TO PROVIDE THE MINIMUM AND MAXIMUM AIR FLOW RATES INDICATED. THE BUILDING OPERATOR SHALL BE ABLE TO READ SPACE TEMPERATURE AND TERMINAL UNIT AIRFLOW FROM THE OPERATOR'S WORKSTATION. THE BUILDING OPERATOR SHALL HAVE THE ABILITY TO CHANGE SPACE TEMPERATURE SETPOINTS, MINIMUM AIRFLOW, AND MAXIMUM AIRFLOW.

NOTES:

1. PROVIDED BY THE TERMINAL UNIT MANUFACTURER
2. CONTROL TUBING OR WIRING TO FLOW MEASUREMENT STATION. TUBING SHALL BE SUITABLE FOR AIR PLENUM INSTALLATION.
3. PRESSURE INDEPENDENT DDC VARIABLE VOLUME TERMINAL UNIT CONTROLLER
4. DISCONNECT SWITCH (DIVISION 23 WORK IN ACCORDANCE WITH DIVISION 26 PROVISIONS).
5. 2-WAY CONTROL VALVE.
6. TO OTHER TERMINALS AND THE DDC SYSTEM.

TYPICAL VAV TERMINAL UNIT CONTROL

EXHAUST FAN CONTROL INTERLOCK SCHEDULE

FAN	INTERLOCKED WITH:	SYSTEM OR DEVICE PROVIDING START/STOP CONTROL OF FAN
EXH001	ACS001 & ACS002	BAS
EXH002	ACS001	BAS
EXH003	ACS002	BAS

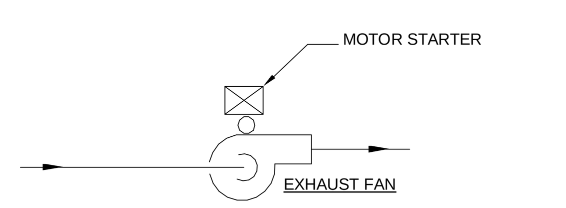

NOTE

1. THIS APPLIES TO EXHAUST FANS EXH001, EXH002 AND EXH003.

SEQUENCE OF OPERATION:

IN THE AUTOMATIC MODE, THE OPERATION OF THE EXHAUST FAN SHALL BE INTERLOCKED WITH THE OPERATION OF OTHER EQUIPMENT IN ACCORDANCE WITH THE CONTROL SCHEDULE.

THE DDC SHALL ENERGIZE THE EXHAUST FAN TO OPERATE PER SCHEDULE. THE DDC SYSTEM SHALL MONITOR THE FAN RUNNING STATUS AND PROVIDE ALARM AT THE OPERATOR WORKSTATION WHEN THE FAN IS FAILED TO RUN.

EXHAUST FAN CONTROL

100% SUBMITTAL

AECOM TECHNICAL SERVICES, INC.
3101 WILSON BOULEVARD
SUITE 900
ARLINGTON, VA 22201

T: 703-682-4900 F: 703.682.4901
www.aecom.com

SEAL AREA

STATE OF MARYLAND – PAUL ANDREW SABATIUK – No. 13276 – REGISTERED PROFESSIONAL ENGINEER

KEY PLAN

REV	DATE	DESCRIPTION	S&R BR.	CUSTOMER	PM	SECT. HEAD

	INITIALS	DATE
DRAWN BY	Designer	
CHECKED BY	PS	
A-E MANAGER	EW	
ENVIRONMENTAL BRANCH	JH	
SAFETY BRANCH	CS	
CM	MMD	
PM	RWP	
CUSTOMER	JWB	
ENG. BRANCH	DGL	

CONTROL SYSTEMS

M-703

FLIGHT PROJECTS BUILDING

NATIONAL AERONAUTICS AND SPACE ADMINISTRATION

GODDARD SPACE FLIGHT CENTER GREENBELT, MARYLAND
FACILITIES MANAGEMENT DIVISION

DATE ISSUED	CoF CODE OR WR#	AECOM PROJECT NO.	SCALE
10/12/2012	12GXAZ	60187636	1/8" = 1'-0"

FILE DATE: 10/12/2012 9:26:26 AM

DDC INPUT/OUTPUT SUMMARY

POINT DESCRIPTION	INPUT ANALOG	INPUT DIGITAL	OUTPUT ANALOG	OUTPUT DIGITAL	REMARKS
036-FCU001					
SUPPLY FAN					
H-A STATUS-AUTO POSITION		●			CONTACT CLOSURE
RUN/STOP COMMAND				●	
RUN STATUS		●			
SUPPLY AIR TEMPERATURE	●				4-20mA
CHW COIL VALVE			●		
HW COIL VALVE			●		
CONDENSATE PUMP STATUS		●			CONTACT CLOSURE
036-FCU002					
SUPPLY FAN					
H-A STATUS-AUTO POSITION		●			CONTACT CLOSURE
RUN/STOP COMMAND				●	
RUN STATUS		●			
SUPPLY AIR TEMPERATURE	●				4-20mA
CHW COIL VALVE			●		
HW COIL VALVE			●		
036-FCU003					
SUPPLY FAN					
H-A STATUS-AUTO POSITION		●			CONTACT CLOSURE
RUN/STOP COMMAND				●	
RUN STATUS		●			
SUPPLY AIR TEMPERATURE	●				4-20mA
CHW COIL VALVE			●		
HW COIL VALVE			●		
036-FCU004					
SUPPLY FAN					
H-A STATUS-AUTO POSITION		●			CONTACT CLOSURE
RUN/STOP COMMAND				●	
RUN STATUS		●			
SUPPLY AIR TEMPERATURE	●				4-20mA
CHW COIL VALVE			●		
HW COIL VALVE			●		
036-FCU005					
SUPPLY FAN					
H-A STATUS-AUTO POSITION		●			CONTACT CLOSURE
RUN/STOP COMMAND				●	
RUN STATUS		●			
SUPPLY AIR TEMPERATURE	●				4-20mA
CHW COIL VALVE			●		
CONDENSATE PUMP STATUS		●			CONTACT CLOSURE
036-FCU006					
SUPPLY FAN					
H-A STATUS-AUTO POSITION		●			CONTACT CLOSURE
RUN/STOP COMMAND				●	
RUN STATUS		●			
SUPPLY AIR TEMPERATURE	●				4-20mA
CHW COIL VALVE			●		
036-FCU007					
SUPPLY FAN					
H-A STATUS-AUTO POSITION		●			CONTACT CLOSURE
RUN/STOP COMMAND				●	
RUN STATUS		●			
SUPPLY AIR TEMPERATURE	●				4-20mA
CHW COIL VALVE			●		
036-FCU008					
SUPPLY FAN					
H-A STATUS-AUTO POSITION		●			CONTACT CLOSURE
RUN/STOP COMMAND				●	
RUN STATUS		●			
SUPPLY AIR TEMPERATURE	●				4-20mA
CHW COIL VALVE			●		

DDC INPUT/OUTPUT SUMMARY

POINT DESCRIPTION	INPUT ANALOG	INPUT DIGITAL	OUTPUT ANALOG	OUTPUT DIGITAL	REMARKS
036-FCU009					
SUPPLY FAN					
H-A STATUS-AUTO POSITION		●			CONTACT CLOSURE
RUN/STOP COMMAND				●	
RUN STATUS		●			
SUPPLY AIR TEMPERATURE	●				4-20mA
CHW COIL VALVE			●		
HW COIL VALVE			●		
CONDENSATE PUMP STATUS		●			CONTACT CLOSURE
036-FCU010					
SUPPLY FAN					
H-A STATUS-AUTO POSITION		●			CONTACT CLOSURE
RUN/STOP COMMAND				●	
RUN STATUS		●			
SUPPLY AIR TEMPERATURE	●				4-20mA
CHW COIL VALVE			●		
HW COIL VALVE			●		
036-FCU011					
SUPPLY FAN					
H-A STATUS-AUTO POSITION		●			CONTACT CLOSURE
RUN/STOP COMMAND				●	
RUN STATUS		●			
SUPPLY AIR TEMPERATURE	●				4-20mA
CHW COIL VALVE			●		
HW COIL VALVE			●		
036-FCU012					
SUPPLY FAN					
H-A STATUS-AUTO POSITION		●			CONTACT CLOSURE
RUN/STOP COMMAND				●	
RUN STATUS		●			
SUPPLY AIR TEMPERATURE	●				4-20mA
CHW COIL VALVE			●		
HW COIL VALVE			●		
036-FCU013					
SUPPLY FAN					
H-A STATUS-AUTO POSITION		●			CONTACT CLOSURE
RUN/STOP COMMAND				●	
RUN STATUS		●			
SUPPLY AIR TEMPERATURE	●				4-20mA
CHW COIL VALVE			●		
CONDENSATE PUMP STATUS		●			CONTACT CLOSURE
036-FCU014					
SUPPLY FAN					
H-A STATUS-AUTO POSITION		●			CONTACT CLOSURE
RUN/STOP COMMAND				●	
RUN STATUS		●			
SUPPLY AIR TEMPERATURE	●				4-20mA
CHW COIL VALVE			●		
036-FCU015					
SUPPLY FAN					
H-A STATUS-AUTO POSITION		●			CONTACT CLOSURE
RUN/STOP COMMAND				●	
RUN STATUS		●			
SUPPLY AIR TEMPERATURE	●				4-20mA
CHW COIL VALVE			●		
036-FCU016					
SUPPLY FAN					
H-A STATUS-AUTO POSITION		●			CONTACT CLOSURE
RUN/STOP COMMAND				●	
RUN STATUS		●			
SUPPLY AIR TEMPERATURE	●				4-20mA
CHW COIL VALVE			●		

DDC INPUT/OUTPUT SUMMARY

POINT DESCRIPTION	INPUT ANALOG	INPUT DIGITAL	OUTPUT ANALOG	OUTPUT DIGITAL	REMARKS
036-FCU017					
SUPPLY FAN					
H-A STATUS-AUTO POSITION		●			CONTACT CLOSURE
RUN/STOP COMMAND				●	
RUN STATUS		●			
SUPPLY AIR TEMPERATURE	●				4-20mA
CHW COIL VALVE			●		
CONDENSATE PUMP STATUS		●			CONTACT CLOSURE
036-FCU018					
SUPPLY FAN					
H-A STATUS-AUTO POSITION		●			CONTACT CLOSURE
RUN/STOP COMMAND				●	
RUN STATUS		●			
SUPPLY AIR TEMPERATURE	●				4-20mA
CHW COIL VALVE			●		
036-FCU019					
SUPPLY FAN					
H-A STATUS-AUTO POSITION		●			CONTACT CLOSURE
RUN/STOP COMMAND				●	
RUN STATUS		●			
SUPPLY AIR TEMPERATURE	●				4-20mA
CHW COIL VALVE			●		
036-FCU020					
SUPPLY FAN					
H-A STATUS-AUTO POSITION		●			CONTACT CLOSURE
RUN/STOP COMMAND				●	
RUN STATUS		●			
SUPPLY AIR TEMPERATURE	●				4-20mA
CHW COIL VALVE			●		
036-FCU021					
SUPPLY FAN					
H-A STATUS-AUTO POSITION		●			CONTACT CLOSURE
RUN/STOP COMMAND				●	
RUN STATUS		●			
SUPPLY AIR TEMPERATURE	●				4-20mA
CHW COIL VALVE			●		

DDC INPUT/OUTPUT SUMMARY

POINT DESCRIPTION	INPUT ANALOG	INPUT DIGITAL	OUTPUT ANALOG	OUTPUT DIGITAL	REMARKS
036-SAF001					
RUN STATUS		●			CONTACT CLOSURE
H-A STATUS-AUTO POSITION		●			
RUN/STOP COMMAND				●	
036-EXH001					
RUN STATUS		●			CONTACT CLOSURE
H-A STATUS-AUTO POSITION		●			
RUN/STOP COMMAND				●	
036-EXH002					
RUN STATUS		●			CONTACT CLOSURE
H-A STATUS-AUTO POSITION		●			
RUN/STOP COMMAND				●	

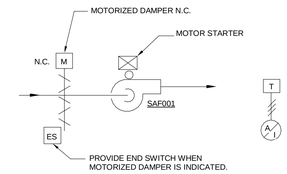

WHERE MOTORIZED DAMPER IS INDICATED ON THE DRAWINGS.

SEQUENCE OF OPERATION:

THE DDC SYSTEM SHALL MONITOR THE SPACE TEMPERATURE SENSOR. ON A RISE IN SPACE TEMPERATURE 5 DEGREES ABOVE THE DESIRE SET POINT 100 F (ADJUSTABLE), THE SUPPLY FAN IS CALLED TO START. WHEN THE SPACE TEMPERATURE FALLS 5 DEGREES BELOW THE SET THE FAN IS DE-ENERGIZED.

WHENEVER THE FAN IS CALLED TO RUN, THE MOTORIZED INLET DAMPER (IF PRESENT) SHALL BE OPENED FULLY. WHEN THE DAMPER IS CONFIRMED TO BE FULLY OPEN VIA END SWITCH, THE FAN MOTOR SHALL BE ENERGIZED. WHENEVER THE FAN MOTOR IS DE-ENERGIZED, THE MOTORIZED DAMPER SHALL BE INDEXED TO ITS NORMAL POSITION.

ALARM
WHEN THE FAN FAILED TO START ALARM SHALL BE INDICATED AT THE OPERATOR WORKSTATION.

FAN SAF001 CONTROL

DDC INPUT/OUTPUT SUMMARY

POINT DESCRIPTION	INPUT ANALOG	INPUT DIGITAL	OUTPUT ANALOG	OUTPUT DIGITAL	REMARKS
036-MUH001					
RUN STATUS		●			CONTACT CLOSURE
036-MUH002					
RUN STATUS		●			CONTACT CLOSURE
036-MUH003					
RUN STATUS		●			CONTACT CLOSURE

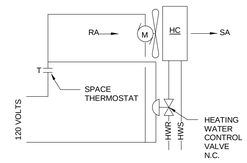

SEQUENCE OF OPERATION:

UNIT HEATER:
UNIT HEATER SHALL BE CONTROLLED BY A LINE VOLTAGE THERMOSTAT. THERMOSTAT SHALL BE RATED FOR 6 FLA 2 120 VOLTS AND WILL CONTROL UNIT HEATERS MOTOR AND HEATING WATER CONTROL VALVE. THE SYSTEM SHALL PERFORM THE FOLLOWING ACTIONS.

1. ENERGIZE SUPPLY FAN WHEN ZONE TEMPERATURE FALLS BELOW ADJUSTABLE ZONE TEMPERATURE HEATING SETPOINT (65°F).
2. OPEN HEATING WATER CONTROL VALVE TO MAINTAIN HEATING SETPOINT (65°F)
3. CLOSE HEATING WATER CONTROL VALVE WHEN ZONE TEMPERATURE RISES ABOVE HEATING SETPOINT.
4. DE-ENERGIZE SUPPLY FAN.

UNIT HEATER (MUH) CONTROL

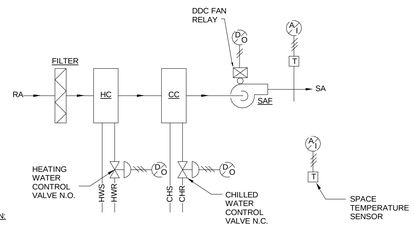

SEQUENCE OF OPERATION:

FOUR PIPE FAN COIL UNIT:
FOUR PIPE FAN COIL UNIT SHALL BE ACTIVATED THROUGH BUILDING AUTOMATION SYSTEM (BAS). ONCE SYSTEM RECEIVES COMMAND TO ACTIVATE FCU, THE BAS SYSTEM SHALL PERFORM THE FOLLOWING ACTIONS.
1 ENERGIZE SUPPLY FAN WHEN ZONE TEMPERATURE RISES ABOVE ADJUSTABLE ZONE TEMPERATURE COOLING SETPOINT (75°F).
2 OPEN CHILLED WATER CONTROL VALVE TO MAINTAIN ADJUSTABLE ZONE TEMPERATURE COOLING SETPOINT (78°F).
3 CLOSE CHILLED WATER CONTROL VALVE WHEN ZONE TEMPERATURE FALLS BELOW COOLING SETPOINT.
4 DE-ENERGIZE SUPPLY FAN.
5 ENERGIZE SUPPLY FAN WHEN ZONE TEMPERATURE FALLS BELOW ADJUSTABLE ZONE TEMPERATURE HEATING SETPOINT (70°F).
6 OPEN HEATING WATER CONTROL VALVE TO MAINTAIN ADJUSTABLE ZONE TEMPERATURE HEATING SETPOINT (70°F)
7 CLOSE HEATING WATER CONTROL VALVE WHEN ZONE TEMPERATURE RISES ABOVE HEATING SETPOINT.
8 DE-ENERGIZE SUPPLY FAN.
ALARMS AND SAFETIES:
1 INITIATE ALARM AT BAS WORKSTATION IF ROOM TEMPERATURE REACHES ABOVE 95F (ADJUSTABLE).
2 INITIATE ALARM AT BAS WORKSTATION IF UNIT FAILS TO OPERATE.
3 INITIATE CONTROL SEQUENCE INDICATED ABOVE ALL ALARM DEVICES ARE MANUALLY RESET.

HEATING AND COOLING FAN COIL UNIT (FCU) CONTROLS

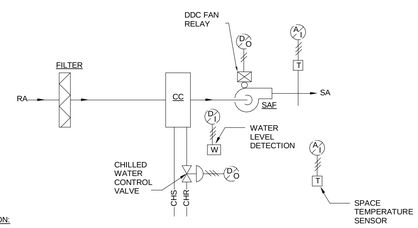

SEQUENCE OF OPERATION:

COOLING ONLY FAN COIL UNIT:
COOLING ONLY FAN COIL UNIT SHALL BE ACTIVATED THROUGH BUILDING AUTOMATION SYSTEM (BAS). ONCE SYSTEM RECEIVES COMMAND TO ACTIVATE FCU, THE BAS SYSTEM SHALL PERFORM THE FOLLOWING ACTIONS.

1 ENERGIZE SUPPLY FAN WHEN ZONE TEMPERATURE RISES ABOVE ADJUSTABLE ZONE TEMPERATURE COOLING SETPOINT (75°F).
2 OPEN CHILLED WATER CONTROL VALVE TO MAINTAIN COOLING SETPOINT.
3 CLOSE CHILLED WATER CONTROL VALVE WHEN ZONE TEMPERATURE FALLS BELOW COOLING SETPOINT.
4 DE-ENERGIZE SUPPLY FAN.

ALARMS AND SAFETIES:
1 DE-ENERGIZE SUPPLY FAN AND INITIATE ALARM AT BAS WORKSTATION IF WATER IS DETECTED IN AUXILIARY DRAIN PAN.
2 CLOSE CHILLED WATER CONTROL VALVES.
3 CLOSE CHILLED AND HEATING WATER CONTROL VALVES.
4 INITIATE ALARM AT BAS WORKSTATION IF ROOM TEMPERATURE REACH ABOVE 95F (ADJUSTABLE).
5 INITIATE ALARM AT BAS WORKSTATION IF UNIT FAIL TO OPERATE.
6 INITIATE CONTROL SEQUENCE INDICATED ABOVE WHEN ALL ALARM DEVICES ARE MANUALLY RESET.

COOLING ONLY FAN COIL UNIT (FCU) CONTROLS

100% SUBMITTAL

AECOM
AECOM TECHNICAL SERVICES, INC.
3101 WILSON BOULEVARD
SUITE 900
ARLINGTON, VA 22201
T: 703-682-4900 F: 703.682.4901
www.aecom.com

SEAL AREA

STATE OF MARYLAND
No. 13276
REGISTERED PROFESSIONAL ENGINEER

KEY PLAN

REV	DATE	DESCRIPTION	S&R BR.	CUSTOMER	PM	SECT. HEAD

	INITIALS	DATE
DRAWN BY	Designer	
CHECKED BY	PS	
A-E MANAGER	EW	
ENVIRONMENTAL BRANCH	JH	
SAFETY BRANCH	CS	
CM	MMD	
PM	RWP	
CUSTOMER	JWB	
ENG. BRANCH	DGL	

CONTROL SYSTEMS

M-704

FLIGHT PROJECTS BUILDING

NATIONAL AERONAUTICS AND SPACE ADMINISTRATION
GODDARD SPACE FLIGHT CENTER GREENBELT, MARYLAND
FACILITIES MANAGEMENT DIVISION

DATE ISSUED	CoF CODE OR WR#	AECOM PROJECT NO.	SCALE
10/12/2012	12GXAZ	60187636	1/8" = 1'-0"

FILE DATE: 10/12/2012 9:26:30 AM

DDC INPUT/OUTPUT SUMMARY

POINT DESCRIPTION	INPUT ANALOG	INPUT DIGITAL	OUTPUT ANALOG	OUTPUT DIGITAL	REMARKS
CHILLED BEAMS ZONE-001					
SPACE TEMPERATURE SENSOR	●				4-20mA
CHW COIL VALVE			●		
HW COIL VALVE			●		
CHILLED BEAMS ZONE-002					
SPACE TEMPERATURE SENSOR	●				4-20mA
CHW COIL VALVE			●		
HW COIL VALVE			●		
CHILLED BEAMS ZONE-003					
SPACE TEMPERATURE SENSOR	●				4-20mA
CHW COIL VALVE			●		
HW COIL VALVE			●		
CHILLED BEAMS ZONE-004					
SPACE TEMPERATURE SENSOR	●				4-20mA
CHW COIL VALVE			●		
HW COIL VALVE			●		
CHILLED BEAMS ZONE-005					
SPACE TEMPERATURE SENSOR	●				4-20mA
CHW COIL VALVE			●		
HW COIL VALVE			●		
CHILLED BEAMS ZONE-006					
SPACE TEMPERATURE SENSOR	●				4-20mA
CHW COIL VALVE			●		
HW COIL VALVE			●		
CHILLED BEAMS ZONE-007					
SPACE TEMPERATURE SENSOR	●				4-20mA
CHW COIL VALVE			●		
HW COIL VALVE			●		
CHILLED BEAMS ZONE-008					
SPACE TEMPERATURE SENSOR	●				4-20mA
CHW COIL VALVE			●		
HW COIL VALVE			●		
CHILLED BEAMS ZONE-009					
SPACE TEMPERATURE SENSOR	●				4-20mA
CHW COIL VALVE			●		
HW COIL VALVE			●		
CHILLED BEAMS ZONE-010					
SPACE TEMPERATURE SENSOR	●				4-20mA
CHW COIL VALVE			●		
HW COIL VALVE			●		
CHILLED BEAMS ZONE-011					
SPACE TEMPERATURE SENSOR	●				4-20mA
CHW COIL VALVE			●		
HW COIL VALVE			●		
CHILLED BEAMS ZONE-012					
SPACE TEMPERATURE SENSOR	●				4-20mA
CHW COIL VALVE			●		
HW COIL VALVE			●		
CHILLED BEAMS ZONE-013					
SPACE TEMPERATURE SENSOR	●				4-20mA
CHW COIL VALVE			●		
HW COIL VALVE			●		
CHILLED BEAMS ZONE-014					
SPACE TEMPERATURE SENSOR	●				4-20mA
CHW COIL VALVE			●		
HW COIL VALVE			●		
CHILLED BEAMS ZONE-015					
SPACE TEMPERATURE SENSOR	●				4-20mA
CHW COIL VALVE			●		
HW COIL VALVE			●		
CHILLED BEAMS ZONE-016					
SPACE TEMPERATURE SENSOR	●				4-20mA
CHW COIL VALVE			●		
HW COIL VALVE			●		
	●				
CHILLED BEAMS ZONE-017					
SPACE TEMPERATURE SENSOR	●				4-20mA
CHW COIL VALVE			●		
HW COIL VALVE			●		
	●				
CHILLED BEAMS ZONE-018					
SPACE TEMPERATURE SENSOR	●				4-20mA
CHW COIL VALVE			●		
HW COIL VALVE			●		
	●				
CHILLED BEAMS ZONE-019					
SPACE TEMPERATURE SENSOR	●				4-20mA
CHW COIL VALVE			●		
HW COIL VALVE			●		
CHILLED BEAMS ZONE-020					
SPACE TEMPERATURE SENSOR	●				4-20mA
CHW COIL VALVE			●		
HW COIL VALVE			●		
CHILLED BEAMS ZONE-021					
SPACE TEMPERATURE SENSOR	●				4-20mA
CHW COIL VALVE			●		
HW COIL VALVE			●		
CHILLED BEAMS ZONE-022					
SPACE TEMPERATURE SENSOR	●				4-20mA
CHW COIL VALVE			●		
HW COIL VALVE			●		
CHILLED BEAMS ZONE-023					
SPACE TEMPERATURE SENSOR	●				4-20mA
CHW COIL VALVE			●		
HW COIL VALVE			●		
CHILLED BEAMS ZONE-024					
SPACE TEMPERATURE SENSOR	●				4-20mA
CHW COIL VALVE			●		
HW COIL VALVE			●		
CHILLED BEAMS ZONE-025					
SPACE TEMPERATURE SENSOR	●				4-20mA
CHW COIL VALVE			●		
HW COIL VALVE			●		

DDC INPUT/OUTPUT SUMMARY

POINT DESCRIPTION	INPUT ANALOG	INPUT DIGITAL	OUTPUT ANALOG	OUTPUT DIGITAL	REMARKS
CHILLED BEAMS ZONE-026					
SPACE TEMPERATURE SENSOR	●				4-20mA
CHW COIL VALVE			●		
HW COIL VALVE			●		
CHILLED BEAMS ZONE-027					
SPACE TEMPERATURE SENSOR	●				4-20mA
CHW COIL VALVE			●		
HW COIL VALVE			●		
CHILLED BEAMS ZONE-028					
SPACE TEMPERATURE SENSOR	●				4-20mA
CHW COIL VALVE			●		
HW COIL VALVE			●		
CHILLED BEAMS ZONE-029					
SPACE TEMPERATURE SENSOR	●				4-20mA
CHW COIL VALVE			●		
HW COIL VALVE			●		
CHILLED BEAMS ZONE-030					
SPACE TEMPERATURE SENSOR	●				4-20mA
CHW COIL VALVE			●		
HW COIL VALVE			●		
CHILLED BEAMS ZONE-031					
SPACE TEMPERATURE SENSOR	●				4-20mA
CHW COIL VALVE			●		
HW COIL VALVE			●		
CHILLED BEAMS ZONE-032					
SPACE TEMPERATURE SENSOR	●				4-20mA
CHW COIL VALVE			●		
HW COIL VALVE			●		
CHILLED BEAMS ZONE-033					
SPACE TEMPERATURE SENSOR	●				4-20mA
CHW COIL VALVE			●		
HW COIL VALVE			●		
CHILLED BEAMS ZONE-034					
SPACE TEMPERATURE SENSOR	●				4-20mA
CHW COIL VALVE			●		
HW COIL VALVE			●		
CHILLED BEAMS ZONE-035					
SPACE TEMPERATURE SENSOR	●				4-20mA
CHW COIL VALVE			●		
HW COIL VALVE			●		
CHILLED BEAMS ZONE-036					
SPACE TEMPERATURE SENSOR	●				4-20mA
CHW COIL VALVE			●		
HW COIL VALVE			●		
CHILLED BEAMS ZONE-037					
SPACE TEMPERATURE SENSOR	●				4-20mA
CHW COIL VALVE			●		
HW COIL VALVE			●		
CHILLED BEAMS ZONE-038					
SPACE TEMPERATURE SENSOR	●				4-20mA
CHW COIL VALVE			●		
HW COIL VALVE			●		
CHILLED BEAMS ZONE-039					
SPACE TEMPERATURE SENSOR	●				4-20mA
CHW COIL VALVE			●		
HW COIL VALVE			●		
CHILLED BEAMS ZONE-040					
SPACE TEMPERATURE SENSOR	●				4-20mA
CHW COIL VALVE			●		
HW COIL VALVE			●		
CHILLED BEAMS ZONE-041					
SPACE TEMPERATURE SENSOR	●				4-20mA
CHW COIL VALVE			●		
HW COIL VALVE			●		
CHILLED BEAMS ZONE-042					
SPACE TEMPERATURE SENSOR	●				4-20mA
CHW COIL VALVE			●		
HW COIL VALVE			●		
CHILLED BEAMS ZONE-043					
SPACE TEMPERATURE SENSOR	●				4-20mA
CHW COIL VALVE			●		
HW COIL VALVE			●		
CHILLED BEAMS ZONE-044					
SPACE TEMPERATURE SENSOR	●				4-20mA
CHW COIL VALVE			●		
HW COIL VALVE			●		
CHILLED BEAMS ZONE-045					
SPACE TEMPERATURE SENSOR	●				4-20mA
CHW COIL VALVE			●		
HW COIL VALVE			●		
CHILLED BEAMS ZONE-046					
SPACE TEMPERATURE SENSOR	●				4-20mA
CHW COIL VALVE			●		
HW COIL VALVE			●		
CHILLED BEAMS ZONE-047					
SPACE TEMPERATURE SENSOR	●				4-20mA
CHW COIL VALVE			●		
HW COIL VALVE			●		
CHILLED BEAMS ZONE-048					
SPACE TEMPERATURE SENSOR	●				4-20mA
CHW COIL VALVE			●		
HW COIL VALVE			●		
CHILLED BEAMS ZONE-049					
SPACE TEMPERATURE SENSOR	●				4-20mA
CHW COIL VALVE			●		
HW COIL VALVE			●		
CHILLED BEAMS ZONE-0050					
SPACE TEMPERATURE SENSOR	●				4-20mA
CHW COIL VALVE			●		
HW COIL VALVE			●		

DDC INPUT/OUTPUT SUMMARY

POINT DESCRIPTION	INPUT ANALOG	INPUT DIGITAL	OUTPUT ANALOG	OUTPUT DIGITAL	REMARKS
FIRST FLOOR NORTH					
CONDENSATE SENSOR	●				CONTACT CLOSURE
CONDENSATE SENSOR	●				CONTACT CLOSURE
CONDENSATE SENSOR	●				CONTACT CLOSURE
FIRST FLOOR SOUTH					
CONDENSATE SENSOR	●				CONTACT CLOSURE
CONDENSATE SENSOR	●				CONTACT CLOSURE
CONDENSATE SENSOR	●				CONTACT CLOSURE
SECOND FLOOR NORTH					
CONDENSATE SENSOR	●				CONTACT CLOSURE
CONDENSATE SENSOR	●				CONTACT CLOSURE
CONDENSATE SENSOR	●				CONTACT CLOSURE
SECOND FLOOR SOUTH					
CONDENSATE SENSOR	●				CONTACT CLOSURE
CONDENSATE SENSOR	●				CONTACT CLOSURE
CONDENSATE SENSOR	●				CONTACT CLOSURE
THIRD FLOOR NORTH					
CONDENSATE SENSOR	●				CONTACT CLOSURE
CONDENSATE SENSOR	●				CONTACT CLOSURE
CONDENSATE SENSOR	●				CONTACT CLOSURE
THIRD FLOOR SOUTH					
CONDENSATE SENSOR	●				CONTACT CLOSURE
CONDENSATE SENSOR	●				CONTACT CLOSURE
CONDENSATE SENSOR	●				CONTACT CLOSURE
FOURTH FLOOR NORTH					
CONDENSATE SENSOR	●				CONTACT CLOSURE
CONDENSATE SENSOR	●				CONTACT CLOSURE
CONDENSATE SENSOR	●				CONTACT CLOSURE
FOURTH FLOOR SOUTH					
CONDENSATE SENSOR	●				CONTACT CLOSURE
CONDENSATE SENSOR	●				CONTACT CLOSURE
CONDENSATE SENSOR	●				CONTACT CLOSURE

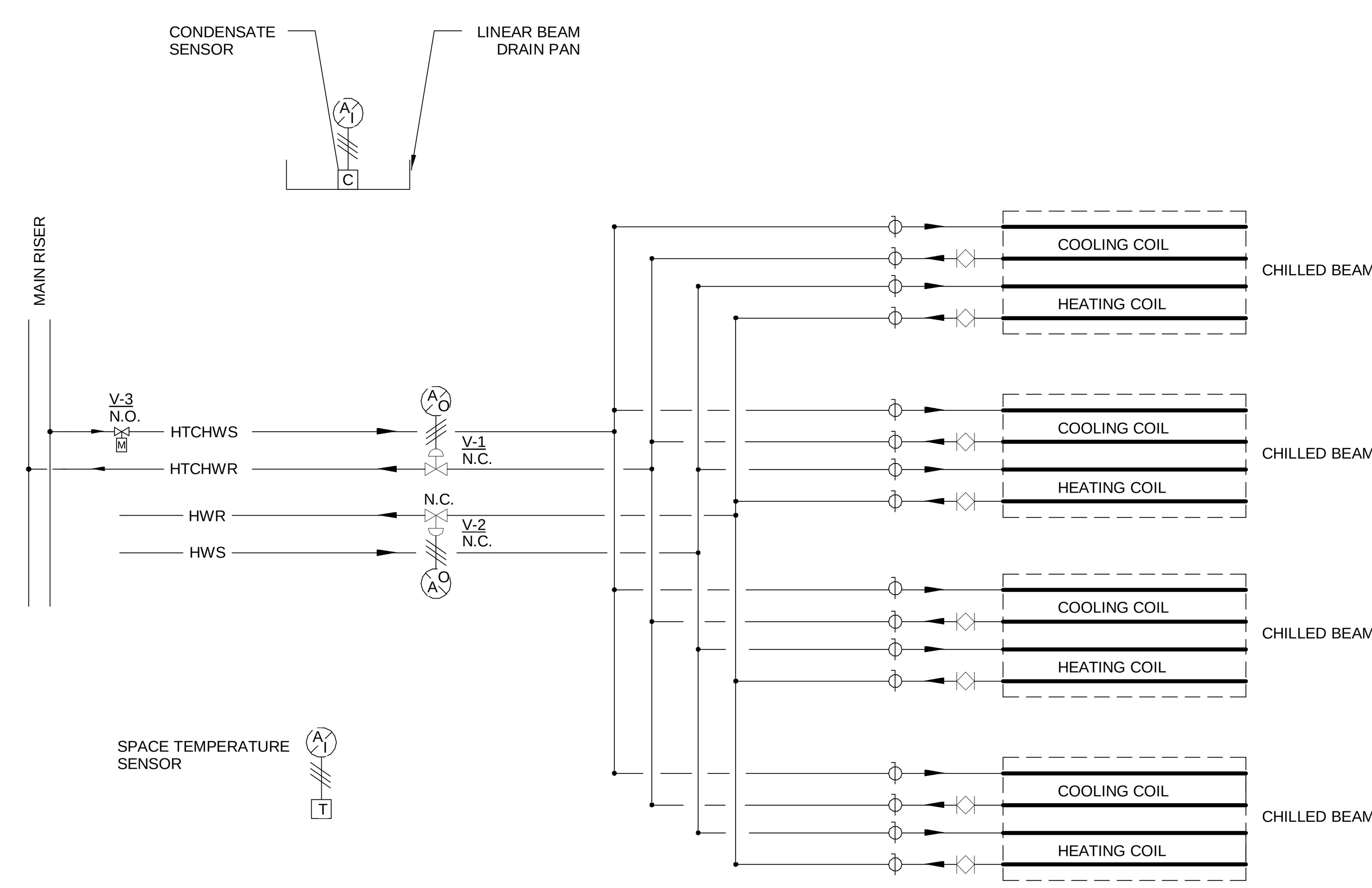

SEQUENCE OF OPERATION:

THE EACH ZONE SHALL CONSISTS OF MULTIPLE BEAMS BEING CONTROLLED BY A SINGLE 2-WAY ON/OFF CONTROL VALVE, SEE FLOOR PLANS FOR ZONE BRAKES DOWN.

COOLING CONTROL:
WHEN THE SPACE TEMPERATURE RISES ABOVE THE SETPOINT (ADJUSTABLE) THE 2-WAY CONTROL VALVE, V-1, SHALL OPEN. WHEN THE SPACE TEMPERATURE FALLS BELOW THE SETPOINT THE 2-WAY CONTROL VALVE, V-1, SHALL CLOSE. PRIMARY AIR SHALL REMAIN FLOWING TO MAINTAIN THE MINIMUM VENTILATION REQUIREMENT.

RANDOMLY LOCATE 3 DETECTORS ALONG 3 PERIMETER SIDES ON EACH FLOOR OF EACH NORTH AND SOUTH WING, INSIDE THE DRAIN PANS OF THE LINEAR BEAMS. WHEN WATER IS DETECTED ON ANY FLOOR OF ANY OF THE WING,CLOSE ZONAL AUTOMATIC ISOLATION VALVE, V-3, AND PROVIDE ALARM AT THE OPERATOR CONTROL STATION. WHEN THE ISSUE IS CLEARED, RESET V-3 VALVE TO ITS NORMAL OPERATION.

HEATING CONTROL:
WHEN THE SPACE TEMPERATURE FALLS BELOW THE SETPOINT (ADJUSTABLE) THE 2-WAY CONTROL VALVE, V-2, SHALL OPEN. WHEN THE SPACE TEMPERATURE RAISES ABOVE THE SETPOINT THE 2-WAY CONTROL VALVE, V-2, SHALL CLOSE. PRIMARY AIR SHALL REMAIN FLOWING TO MAINTAIN THE MINIMUM VENTILATION REQUIREMENT.

CHILLED BEAM ZONAL CONTROLS

100% SUBMITTAL

AECOM

AECOM TECHNICAL SERVICES, INC.
3101 WILSON BOULEVARD
SUITE 900
ARLINGTON, VA 22201

T: 703-682-4900 F: 703.682.4901
www.aecom.com

SEAL AREA

STATE OF MARYLAND PAUL ANDREW SABATIUK No. 13276 REGISTERED PROFESSIONAL ENGINEER

KEY PLAN

REV	DATE	DESCRIPTION	S&R BR.	CUSTOMER	PM	SECT. HEAD

	INITIALS	DATE
DRAWN BY	Designer	
CHECKED BY	PS	
A-E MANAGER	EW	
ENVIRONMENTAL BRANCH	JH	
SAFETY BRANCH	CS	
CM	MMD	
PM	RWP	
CUSTOMER	JWB	
ENG. BRANCH	DGL	

CONTROL SYSTEMS

M-705

FLIGHT PROJECTS BUILDING

NATIONAL AERONAUTICS AND SPACE ADMINISTRATION
GODDARD SPACE FLIGHT CENTER GREENBELT, MARYLAND
FACILITIES MANAGEMENT DIVISION

DATE ISSUED	CoF CODE OR WR#	AECOM PROJECT NO.	SCALE
10/12/2012	12GXAZ	60187636	1/8" = 1'-0"

FILE DATE: 10/12/2012 9:26:33 AM

DDC INPUT/OUTPUT SUMMARY

POINT DESCRIPTION	INPUT ANALOG	INPUT DIGITAL	OUTPUT ANALOG	OUTPUT DIGITAL	REMARKS
CHILLED BEAMS ZONE-051					
SPACE TEMPERATURE SENSOR	●				4-20mA
CHW COIL VALVE			●		
HW COIL VALVE			●		↓
CHILLED BEAMS ZONE-052					
SPACE TEMPERATURE SENSOR	●				4-20mA
CHW COIL VALVE			●		
HW COIL VALVE			●		↓
CHILLED BEAMS ZONE-053					
SPACE TEMPERATURE SENSOR	●				4-20mA
CHW COIL VALVE			●		
HW COIL VALVE			●		↓
CHILLED BEAMS ZONE-054					
SPACE TEMPERATURE SENSOR	●				4-20mA
CHW COIL VALVE			●		
HW COIL VALVE			●		↓
CHILLED BEAMS ZONE-055					
SPACE TEMPERATURE SENSOR	●				4-20mA
CHW COIL VALVE			●		
HW COIL VALVE			●		↓
CHILLED BEAMS ZONE-056					
SPACE TEMPERATURE SENSOR	●				4-20mA
CHW COIL VALVE			●		
HW COIL VALVE			●		↓
CHILLED BEAMS ZONE-057					
SPACE TEMPERATURE SENSOR	●				4-20mA
CHW COIL VALVE			●		
HW COIL VALVE			●		↓
CHILLED BEAMS ZONE-058					
SPACE TEMPERATURE SENSOR	●				4-20mA
CHW COIL VALVE			●		
HW COIL VALVE			●		↓
CHILLED BEAMS ZONE-059					
SPACE TEMPERATURE SENSOR	●				4-20mA
CHW COIL VALVE			●		
HW COIL VALVE			●		↓
CHILLED BEAMS ZONE-060					
SPACE TEMPERATURE SENSOR	●				4-20mA
CHW COIL VALVE			●		
HW COIL VALVE			●		↓
CHILLED BEAMS ZONE-061					
SPACE TEMPERATURE SENSOR	●				4-20mA
CHW COIL VALVE			●		
HW COIL VALVE			●		↓
CHILLED BEAMS ZONE-062					
SPACE TEMPERATURE SENSOR	●				4-20mA
CHW COIL VALVE			●		
HW COIL VALVE			●		↓
CHILLED BEAMS ZONE-063					
SPACE TEMPERATURE SENSOR	●				4-20mA
CHW COIL VALVE			●		
HW COIL VALVE			●		↓
CHILLED BEAMS ZONE-064					
SPACE TEMPERATURE SENSOR	●				4-20mA
CHW COIL VALVE			●		
HW COIL VALVE			●		↓
CHILLED BEAMS ZONE-065					
SPACE TEMPERATURE SENSOR	●				4-20mA
CHW COIL VALVE			●		
HW COIL VALVE			●		↓
CHILLED BEAMS ZONE-066					
SPACE TEMPERATURE SENSOR	●				4-20mA
CHW COIL VALVE			●		
HW COIL VALVE			●		↓
CHILLED BEAMS ZONE-067					
SPACE TEMPERATURE SENSOR	●				4-20mA
CHW COIL VALVE			●		
HW COIL VALVE			●		↓
CHILLED BEAMS ZONE-068					
SPACE TEMPERATURE SENSOR	●				4-20mA
CHW COIL VALVE			●		
HW COIL VALVE			●		↓
CHILLED BEAMS ZONE-069					
SPACE TEMPERATURE SENSOR	●				4-20mA
CHW COIL VALVE			●		
HW COIL VALVE			●		↓
CHILLED BEAMS ZONE-070					
SPACE TEMPERATURE SENSOR	●				4-20mA
CHW COIL VALVE			●		
HW COIL VALVE			●		↓
CHILLED BEAMS ZONE-071					
SPACE TEMPERATURE SENSOR	●				4-20mA
CHW COIL VALVE			●		
HW COIL VALVE			●		↓
CHILLED BEAMS ZONE-072					
SPACE TEMPERATURE SENSOR	●				4-20mA
CHW COIL VALVE			●		
HW COIL VALVE			●		↓
CHILLED BEAMS ZONE-073					
SPACE TEMPERATURE SENSOR	●				4-20mA
CHW COIL VALVE			●		
HW COIL VALVE			●		↓
CHILLED BEAMS ZONE-074					
SPACE TEMPERATURE SENSOR	●				4-20mA
CHW COIL VALVE			●		
HW COIL VALVE			●		↓
CHILLED BEAMS ZONE-075					
SPACE TEMPERATURE SENSOR	●				4-20mA
CHW COIL VALVE			●		
HW COIL VALVE			●		↓

DDC INPUT/OUTPUT SUMMARY

POINT DESCRIPTION	INPUT ANALOG	INPUT DIGITAL	OUTPUT ANALOG	OUTPUT DIGITAL	REMARKS
CHILLED BEAMS ZONE-076					
SPACE TEMPERATURE SENSOR	●				4-20mA
CHW COIL VALVE			●		
HW COIL VALVE			●		↓
CHILLED BEAMS ZONE-077					
SPACE TEMPERATURE SENSOR	●				4-20mA
CHW COIL VALVE			●		
HW COIL VALVE			●		↓
CHILLED BEAMS ZONE-078					
SPACE TEMPERATURE SENSOR	●				4-20mA
CHW COIL VALVE			●		
HW COIL VALVE			●		↓
CHILLED BEAMS ZONE-079					
SPACE TEMPERATURE SENSOR	●				4-20mA
CHW COIL VALVE			●		
HW COIL VALVE			●		↓
CHILLED BEAMS ZONE-080					
SPACE TEMPERATURE SENSOR	●				4-20mA
CHW COIL VALVE			●		
HW COIL VALVE			●		↓
CHILLED BEAMS ZONE-081					
SPACE TEMPERATURE SENSOR	●				4-20mA
CHW COIL VALVE			●		
HW COIL VALVE			●		↓
CHILLED BEAMS ZONE-082					
SPACE TEMPERATURE SENSOR	●				4-20mA
CHW COIL VALVE			●		
HW COIL VALVE			●		↓
CHILLED BEAMS ZONE-083					
SPACE TEMPERATURE SENSOR	●				4-20mA
CHW COIL VALVE			●		
HW COIL VALVE			●		↓
CHILLED BEAMS ZONE-084					
SPACE TEMPERATURE SENSOR	●				4-20mA
CHW COIL VALVE			●		
HW COIL VALVE			●		↓
CHILLED BEAMS ZONE-085					
SPACE TEMPERATURE SENSOR	●				4-20mA
CHW COIL VALVE			●		
HW COIL VALVE			●		↓
CHILLED BEAMS ZONE-086					
SPACE TEMPERATURE SENSOR	●				4-20mA
CHW COIL VALVE			●		
HW COIL VALVE			●		↓
CHILLED BEAMS ZONE-087					
SPACE TEMPERATURE SENSOR	●				4-20mA
CHW COIL VALVE			●		
HW COIL VALVE			●		↓
CHILLED BEAMS ZONE-088					
SPACE TEMPERATURE SENSOR	●				4-20mA
CHW COIL VALVE			●		
HW COIL VALVE			●		↓
CHILLED BEAMS ZONE-089					
SPACE TEMPERATURE SENSOR	●				4-20mA
CHW COIL VALVE			●		
HW COIL VALVE			●		↓
CHILLED BEAMS ZONE-090					
SPACE TEMPERATURE SENSOR	●				4-20mA
CHW COIL VALVE			●		
HW COIL VALVE			●		↓
CHILLED BEAMS ZONE-091					
SPACE TEMPERATURE SENSOR	●				4-20mA
CHW COIL VALVE			●		
HW COIL VALVE			●		↓
CHILLED BEAMS ZONE-092					
SPACE TEMPERATURE SENSOR	●				4-20mA
CHW COIL VALVE			●		
HW COIL VALVE			●		↓
CHILLED BEAMS ZONE-093					
SPACE TEMPERATURE SENSOR	●				4-20mA
CHW COIL VALVE			●		
HW COIL VALVE			●		↓
CHILLED BEAMS ZONE-094					
SPACE TEMPERATURE SENSOR	●				4-20mA
CHW COIL VALVE			●		
HW COIL VALVE			●		↓
CHILLED BEAMS ZONE-095					
SPACE TEMPERATURE SENSOR	●				4-20mA
CHW COIL VALVE			●		
HW COIL VALVE			●		↓
CHILLED BEAMS ZONE-096					
SPACE TEMPERATURE SENSOR	●				4-20mA
CHW COIL VALVE			●		
HW COIL VALVE			●		↓
CHILLED BEAMS ZONE-097					
SPACE TEMPERATURE SENSOR	●				4-20mA
CHW COIL VALVE			●		
HW COIL VALVE			●		↓
CHILLED BEAMS ZONE-098					
SPACE TEMPERATURE SENSOR	●				4-20mA
CHW COIL VALVE			●		
HW COIL VALVE			●		↓
CHILLED BEAMS ZONE-099					
SPACE TEMPERATURE SENSOR	●				4-20mA
CHW COIL VALVE			●		
HW COIL VALVE			●		↓
CHILLED BEAMS ZONE-100					
SPACE TEMPERATURE SENSOR	●				4-20mA
CHW COIL VALVE			●		
HW COIL VALVE			●		↓

DDC INPUT/OUTPUT SUMMARY

POINT DESCRIPTION	INPUT ANALOG	INPUT DIGITAL	OUTPUT ANALOG	OUTPUT DIGITAL	REMARKS
CHILLED BEAMS ZONE-101					
SPACE TEMPERATURE SENSOR	●				4-20mA
CHW COIL VALVE			●		
HW COIL VALVE			●		↓
CHILLED BEAMS ZONE-102					
SPACE TEMPERATURE SENSOR	●				4-20mA
CHW COIL VALVE			●		
HW COIL VALVE			●		↓
CHILLED BEAMS ZONE-103					
SPACE TEMPERATURE SENSOR	●				4-20mA
CHW COIL VALVE			●		
HW COIL VALVE			●		↓
CHILLED BEAMS ZONE-104					
SPACE TEMPERATURE SENSOR	●				4-20mA
CHW COIL VALVE			●		
HW COIL VALVE			●		↓
CHILLED BEAMS ZONE-105					
SPACE TEMPERATURE SENSOR	●				4-20mA
CHW COIL VALVE			●		
HW COIL VALVE			●		↓
CHILLED BEAMS ZONE-106					
SPACE TEMPERATURE SENSOR	●				4-20mA
CHW COIL VALVE			●		
HW COIL VALVE			●		↓
CHILLED BEAMS ZONE-107					
SPACE TEMPERATURE SENSOR	●				4-20mA
CHW COIL VALVE			●		
HW COIL VALVE			●		↓
CHILLED BEAMS ZONE-108					
SPACE TEMPERATURE SENSOR	●				4-20mA
CHW COIL VALVE			●		
HW COIL VALVE			●		↓
CHILLED BEAMS ZONE-109					
SPACE TEMPERATURE SENSOR	●				4-20mA
CHW COIL VALVE			●		
HW COIL VALVE			●		↓
CHILLED BEAMS ZONE-110					
SPACE TEMPERATURE SENSOR	●				4-20mA
CHW COIL VALVE			●		
HW COIL VALVE			●		↓
CHILLED BEAMS ZONE-111					
SPACE TEMPERATURE SENSOR	●				4-20mA
CHW COIL VALVE			●		
HW COIL VALVE			●		↓
CHILLED BEAMS ZONE-112					
SPACE TEMPERATURE SENSOR	●				4-20mA
CHW COIL VALVE			●		
HW COIL VALVE			●		↓
CHILLED BEAMS ZONE-113					
SPACE TEMPERATURE SENSOR	●				4-20mA
CHW COIL VALVE			●		
HW COIL VALVE			●		↓
CHILLED BEAMS ZONE-114					
SPACE TEMPERATURE SENSOR	●				4-20mA
CHW COIL VALVE			●		
HW COIL VALVE			●		↓
CHILLED BEAMS ZONE-115					
SPACE TEMPERATURE SENSOR	●				4-20mA
CHW COIL VALVE			●		
HW COIL VALVE			●		↓
CHILLED BEAMS ZONE-116					
SPACE TEMPERATURE SENSOR	●				4-20mA
CHW COIL VALVE			●		
HW COIL VALVE			●		↓
CHILLED BEAMS ZONE-117					
SPACE TEMPERATURE SENSOR	●				4-20mA
CHW COIL VALVE			●		
HW COIL VALVE			●		↓
CHILLED BEAMS ZONE-118					
SPACE TEMPERATURE SENSOR	●				4-20mA
CHW COIL VALVE			●		
HW COIL VALVE			●		↓
CHILLED BEAMS ZONE-119					
SPACE TEMPERATURE SENSOR	●				4-20mA
CHW COIL VALVE			●		
HW COIL VALVE			●		↓
CHILLED BEAMS ZONE-120					
SPACE TEMPERATURE SENSOR	●				4-20mA
CHW COIL VALVE			●		
HW COIL VALVE			●		↓
CHILLED BEAMS ZONE-121					
SPACE TEMPERATURE SENSOR	●				4-20mA
CHW COIL VALVE			●		
HW COIL VALVE			●		↓

100% SUBMITTAL

AECOM

AECOM TECHNICAL SERVICES, INC.
3101 WILSON BOULEVARD
SUITE 900
ARLINGTON, VA 22201

T: 703-682-4900 F: 703.682.4901
www.aecom.com

SEAL AREA

STATE OF MARYLAND · PAUL ANDREW SABATULA · No. 13276 · REGISTERED PROFESSIONAL ENGINEER

KEY PLAN

REV	DATE	DESCRIPTION	S&R BR.	CUSTOMER	PM	SECT. HEAD

	INITIALS	DATE
DRAWN BY	Designer	
CHECKED BY	PS	
A-E MANAGER	EW	
ENVIRONMENTAL BRANCH	JH	
SAFETY BRANCH	CS	
CM	MMD	
PM	RWP	
CUSTOMER	JWB	
ENG. BRANCH	DGL	

CONTROL SYSTEMS

M-706

FLIGHT PROJECTS BUILDING

NATIONAL AERONAUTICS AND SPACE ADMINISTRATION

GODDARD SPACE FLIGHT CENTER GREENBELT, MARYLAND
FACILITIES MANAGEMENT DIVISION

DATE ISSUED	CoF CODE OR WR#	AECOM PROJECT NO.	SCALE
10/12/2012	12GXAZ	60187636	1/8" = 1'-0"

FILE DATE: 10/12/2012 9:26:37 AM

LUMINAIRES

A1 — UPPER CASE LETTER INDICATES FIXTURE TYPE. REFER TO FIXTURE SCHEDULE.

a — LOWER CASE LETTER REFERS TO SWITCH LEG (WHEN PRESENT).

LIGHTING FIXTURE. REFER TO FIXTURE SCHEDULE.

LIGHTING FIXTURE. REFER TO FIXTURE SCHEDULE. (LIFE SAFETY BRANCH)

EXIT SIGN, CEILING OR PENDANT MOUNTED. SHADED PORTION DENOTES FACE(S). DIRECTIONAL ARROWS AS INDICATED.

EXIT SIGN, WALL MOUNTED. SHADED PORTION DENOTES FACE(S). DIRECTIONAL ARROWS AS INDICATED.

POLE AND LIGHT. REFER TO FIXTURE SCHEDULE.

OCCUPANCY SENSORS

SENSORS

a — SWITCH LEG (WHEN PRESENT).

OC — CEILING MOUNTED LOW VOLTAGE OCCUPANCY SENSOR. ALL SENSORS SHALL BE DUAL TECHNOLOGY TYPE.

POWER DISTRIBUTION

DESCRIPTION

CEILING MOUNTED JUNCTION BOX OR PULL BOX

WALL MOUNTED JUNCTION BOX OR PULL BOX

CONNECTION TO SYSTEMS FURNITURE/EQUIPMENT. PROVIDE LEADS, TERMINAL STRIPS OR CONTROL PANEL INCLUDING ALL CONDUCTORS, CONDUIT, FLEXIBLE CONDUIT, JUNCTION BOXES, CONNECTORS, FITTINGS, ETC. REQUIRED FOR PROPER CONNECTION.

MOTOR CONNECTION.

PANELBOARD, FLUSH MOUNTED AT 72" AFF TO TOP.

PANELBOARD, SURFACE MOUNTED AT 72" AFF TO TOP.

DISTRIBUTION PANELBOARD, SURFACE MOUNTED AT 72" AFF TO TOP.

CGB-1C902 — GROUNDING BUS BAR, SUBSCRIPT INDICATES NAME.

--AF/--AT — FUSED/NONFUSED DISCONNECT SWITCH. MOUNT AT 72" AFF TO TOP. WHERE INDICATED --AF/--AT PROVIDE FUSED DISCONNECT SWITCH.

CB1 — ENCLOSED CIRCUIT BREAKER. MOUNT AT 72" AFF TO TOP

COMBINATION MAGNETIC STARTER/DISCONNECT SWITCH. MOUNT AT 72" AFF TO CENTER.

BREAK-GLASS TYPE SHUNT TRIP STATION. MOUNT AT 48" AFF TO CENTER.

VFD — VARIABLE FREQUENCY DRIVE.

WIRING DEVICES

SUBSCRIPTS INDICATE THE FOLLOWING: (FOR ALL RECEPTACLES)
- G - DUPLEX RECEPTACLE WITH INTEGRAL GROUND FAULT CIRCUIT INTERRUPTER (GFCI).
- C - MOUNT DEVIDE ABOVE THE COUNTER TOP. SEE SHEET E0-100 NOTE #3 ON THIS SHEET FOR REQUIREMENTS.
- TR - TAMPER RESISTANT RECEPTACLE
- +48" - MOUNT DEVICE AT 48" AFF TO CENTER. OTHER MOUNTING HEIGHTS AS INDICATED.
- WP - WEATHER PROOF COVER
- H - MOUNT RECEPTACLE HORIZONTALLY.
- R - MOUNT RECEPTACLE IN MODULAR FURNITURE SYSTEM RACEWAY. COORDINATE MOUNTING REQUIREMENTS WITH MANUFACTURER INSTRUCTIONS.
- SS - PROVIDE TYPE 302 STAINLESS STEEL COVERPLATE FOR THIS DEVICE.

20A, 125V DUPLEX RECEPTACLE. WALL MOUNT AT 18" AFF TO CENTER UON.

20A, 125V QUADRUPLEX RECEPTACLE. WALL MOUNT AT 18" AFF TO CENTER UON.

20A, 125V CEILING MOUNTED DUPLEX RECEPTACLE. COORDINATE FINAL LOCATION WITH ARCHITECTURAL DRAWINGS AND A/V VENDOR.

SPECIAL RECEPTACLE WITH NEMA CONFIGURATION AS TO MATCH EQUIPMENT. WALL MOUNT AT 18" AFF TO CENTER UON.

RECESSED FLOOR BOX WITH SEPARATE POWER AND COMUNICATIONS COMPARTMENTS.

MULTI-OUTLET PLUG STRIP ASSEMBLY AS INDICATED ON POWER PLANS. MOUNTING HEIGHT AS INDICATED.

S — 20A, 120/277V SINGLE POLE SWITCH. WALL MOUNT AT 48" AFF TO CENTER UON. SUBSCRIPTS INDICATE THE FOLLOWING:
- 3 - THREE WAY
- 4 - FOUR WAY
- a,b,c... - INDICATES SWITCH LEGS
- EXP - EXPLOSION PROOF
- F - FAN SPEED CONTROLLER
- FD - FLUORESCENT DIMMING CONTROLLER
- HW - SWITCH LOCATED IN PATIENT HEADWALL
- K - KEY OPERATED SWITCH
- M - MANUAL MOTOR STARTER WITH MELTING ALLOY HEATER ELEMENTS.
- MC - MOMENTARY CONTACT TOGGLE SWITCH
- P - SWITCH WITH PILOT LIGHT
- WP WEATHERPROOF SWITCH

EPO — "EMERGENCY POWER OFF" PUSH BUTTON. 1 3/8" DIAMETER RED MOMENTARY CONTACT MUSHROOM HEAD PUSH BUTTON WITH ALUMINUM GUARD. NORMALLY OPEN CONTACT RATED FOR 20A, 120VAC. MOUNT 48" AFF TO CENTER.

CONDUIT AND CONDUCTORS

BRANCH CIRCUIT CONCEALED IN CEILING SPACE OR WALL.

BRANCH CIRCUIT WIRING IN CONDUIT. EACH BRANCH CIRCUIT SHALL BE PROVIDED WITH A DEDICATED NEUTRAL CONDUCTOR. SHARING OF A NEUTRAL CONDUCTOR BETWEEN TWO OR MORE BRANCH CIRCUITS IS NOT ALLOWED. MINIMUM CONDUCTOR SIZE SHALL BE #12 AWG. MINIMUM CONDUIT SIZE SHALL BE 3/4" C.

1ALN1-1,3,5
- PANELBOARD DESIGNATION.
- HOMERUN TO PANELBOARD.
- CIRCUIT DESIGNATION. "1,3" INDICATES A TWO-POLE CIRCUIT BREAKER. "1,3,5" INDICATES A THREE-POLE CIRCUIT BREAKER.

CONDUIT TERMINATION, (C) CAPPED, (B) BUSHED, (G) GROUND BUSHING.

TELEPHONE / DATA SYSTEM

DATA OUTLET. MOUNT AT 18" AFF TO CENTER UNLESS OTHERWISE NOTED. PROVIDE J-BOX AND 1" CONDUIT TO ABOVE CEILING SPACE.

TELEPHONE OUTLET. MOUNT AT 18" AFF TO CENTER UNLESS OTHERWISE NOTED. PROVIDE J-BOX AND 3/4" CONDUIT TO ABOVE CEILING SPACE

COMBINATION DUAL DATA / DUAL TELEPHONE OUTLET. MOUNT AT 18" AFF TO CENTER U.O.N. PROVIDE 1-1/4" CONDUIT TO 6" ABOVE CEILING (AIM CONDUIT TOWARD NEAREST IT ROOM) WITH A 4" J-BOX WHERE EACH SYMBOL IS SHOWN.

COMBINATION POWER/COMMUNICATION SYSTEM OUTLETS FLUSH MOUNTED IN FLOOR.

TGB — TELECOMMUNICATIONS GROUNDING BUSBAR. MOUNT AT 18" AFF TO CENTER.

TMGB — TELECOMMUNICATIONS MAIN GROUNDING BUSBAR. MOUNT AT 18" AFF TO CENTER.

CR — CARD READER. MOUNT AT 42" AFF TO CENTER U.O.N. PROVIDE 1-1/4" CONDUIT TO 6" ABOVE CEILING (AIM CONDUIT TOWARD NEAREST IT ROOM) WITH A 4" J-BOX WHERE EACH SYMBOL IS SHOWN. SEE DETAIL #8 ON SHEET E-801 FOR MOUNTING DETAIL.

IC1 — INTERCOM WITH INTEGRAL CAMERA STATION.

IC2 — INTERCOM STATION.

MISCELLANEOUS

00 — KEY NOTE SYMBOL. (SEE KEY NOTES ON INDIVIDUAL DRAWINGS).

ELECTRICAL GROUND

CONDUCTOR CONNECTION

LIGHTNING PROTECTION AIR TERMINAL

CEILING MOUNTED CCTV.

MAGNETIC DOOR CONTACT POINTS.

GTD — PROVIDE FIXTURE WITH FACTORY INSTALLED GENERATOR TRANSFER DEVICE. BASIS OF DESIGN: PHIILIPS, BODINE GTD.

PC — WALL-MOUNTED (LINE-VOLTAGE) PHOTOCELL.

K — KIRK KEY INTERLOCK.

SINGLE LINE DIAGRAM

3P/100A — CIRCUIT BREAKER WITH NUMBER OF POLES AND TRIP RATING AS INDICATED. SUBSCRIPTS INDICATE THE FOLLOWING:
- ET - ELECTRONIC TRIP, SOLID STATE CIRCUIT BREAKER.
- GFP - CIRCUIT BREAKER EQUIPPED WITH INTEGRAL GROUND FAULT PROTECTION.
- GFM - CIRCUIT BREAKER EQUIPPED WITH GROUND FAULT MONITORING RELAY. BREAKER SHALL NOT TRIP ON GROUND FAULT, BUT CAUSE ALARM ANNUNCIATION ONLY.
- ETM - ELECTRONIC TRIP SOLID STATE CIRCUIT BREAKER WITH INTEGRAL POWER METERING AND BREAKER STATUS. METERING AND BREAKER STATUS SHALL BE CONNECTED TO POWER MONITORING SYSTEM VIA NETWORK CABLING.

3P/100A — DRAW-OUT TYPE CIRCUIT BREAKER WITH NUMBER OF POLES AND TRIP RATING AS INDICATED. SUBSCRIPTS INDICATE THE FOLLOWING:
- ET - ELECTRONIC TRIP, SOLID STATE CIRCUIT BREAKER.
- GFP - CIRCUIT BREAKER EQUIPPED WITH INTEGRAL GROUND FAULT PROTECTION.
- GFM - CIRCUIT BREAKER EQUIPPED WITH GROUND FAULT MONITORING RELAY. BREAKER SHALL NOT TRIP ON GROUND FAULT, BUT CAUSE ALARM ANNUNCIATION ONLY.
- ETM - ELECTRONIC TRIP SOLID STATE CIRCUIT BREAKER WITH INTEGRAL POWER METERING AND BREAKER STATUS. METERING AND BREAKER STATUS SHALL BE CONNECTED TO POWER MONITORING SYSTEM VIA NETWORK CABLING.

RELAY — MICROPROCESSOR BASED OVERCURRENT RELAY WITH THE FOLLOWING FUNCTIONS:
PHASE OVERCURRENT (51) ELEMENT
PHASE INSTANTANEOUS (50) ELEMENT
GROUND TIME OVERCURRENT (51G) ELEMENT
GROUND INSTANTANEOUS (50) ELEMENT
LOCK-OUT RELAY (86)

T — DRY TYPE TRANSFORMER.

M — MULTIFUNCTION DIGITAL POWER CIRCUIT MONITOR.

SURGE ARRESTOR WITH RATINGS AS INDICATED.

POWER TRANSFORMER WITH DELTA CONNECTED PRIMARY, WYE CONNECTED SECONDARY AND RATING AS INDICATED.

PANELBOARD:

1AHN1 — SEE PANEL SCHEDULE FOR SIZE. IF NOT PRESENT, PANELBOARD WITH MAIN LUGS ONLY.

WHEN PRESENT, INDICATES PANELBOARD WITH FEED THROUGH LUGS.

SPD — SURGE PROTECTION DEVICE (INTERNAL).

ABBREVIATIONS

A	AMPERES	HP	HORSEPOWER
AAP	AREA ALARM PANEL	HPS	HIGH PRESSURE SODIUM
ADO	AUTOMATIC DOOR OPENER	HV	HIGH VOLTAGE
AE	ARCHITECT AND ENGINEER	INCAND	INCANDESCENT
AF	AMPERE FRAME	JB	JUNCTION BOX
AFC	ABOVE FINISHED CEILING	KV	KILO-VOLTS
AFF	ABOVE FINISHED FLOOR	KVA	KILO-VOLTS-AMPERES
AFG	ABOVE FINISHED GRADE	KVAR	KILO-VOLTS-AMPERES REACTIVE
AIC	AMPERES INTERUPTING CAPACITY	KW	KILO-WATTS
		KWH	KILO-WATT-HOURS
AT	AMPERE TRIP	<=	LESS THAN OR EQUAL TO
ATS	AUTOMATIC TRANSFER SWITCH	LAN	LOCAL AREA NETWORK
BC	BARE COPPER	LTCP	LOCAL TEMPERATURE CONTROL PANEL
BFC	BELOW FINISHED CEILING		
BFG	BELOW FINISHED GRADE	LTG	LIGHTING
BKR	BREAKER	LTS	LIGHTS
BRIP	BOILER PLANT INSTRUMENTATION PANEL	LV	LOW VOLTAGE
		m	METER
C	CONDUIT	mm	MILLIMETER
CAB	CABINET	MATV	MASTER ANTENNA TELEVISION
CB, C/B	CIRCUIT BREAKER	MAX	MAXIMUM
CCTV	CLOSED CIRCUIT TELEVISION	MCB	MAIN CIRCUIT BREAKER
CKT	CIRCUIT	MCC	MOTOR CONTROL CENTER
CLG	CEILING	MCP	MOTOR CIRCUIT PROTECTOR
CL	CENTERLINE	MDP	MAIN DISTRIBUTION PANEL
CT's	CURRENT TRANSFORMERS	MFR	MANUFACTURER
CU	COPPER	MH	MANHOLE
DB	DIRECT BURIED	MIN	MINIMUM
DISC	DISCONNECT(ING)	MISC	MISCELLANEOUS
DWG	DRAWING(S)	MLO	MAIN LUGS ONLY
EA	EACH	MTR	MOTOR
EC	EMPTY CONDUIT	MTD	MOUNTED
EF	EXHAUST FAN	MTG	MOUNTING
EG	EQUIPMENT GROUND	MTG HGT	MOUNTING HEIGHT
EJ	EXPANSION JOINT	MTS	MANUAL TRANSFER SWITCH
ELEC	ELECTRIC	NC	NURSE CALL
EMERG	EMERGENCY	NEC	NATIONAL ELECTRICAL CODE
EMT	ELECTRICAL METALLIC TUBING	NFSS	NON-FUSED SAFETY SWITCH
EQUIP	EQUIPMENT	N.O.	NORMALLY OPEN
ESM	ELECTRIC STRIP MOLD	P	POLE
EUH	ELECTRIC UNIT HEATER	PB	PULL BOX
EWC	ELECTRIC WATER COOLER	PBPU	PREFABRICATED BEDSIDE PATIENT POWER UNIT
EWH	ELECTRIC WATER HEATER		
E, EX	EXISTING	PNL	PANEL
EXH	EXHAUST	POD	POWER OPERATED DAMPER
EXP, XP	EXPLOSION PROOF	PTRV	POWER TYPE ROOF VENTILATION
FA	FIRE ALARM	PVC	POLYVINYL CHLORIDE
FACP	FIRE ALARM CONTROL PANEL	PWR	POWER
FATC	FIRE ALARM TERMINAL CABINET	RECEPT	RECEPTACLE
FCU	FAN COIL UNIT	RGIP	REMOTE GROUND INDICATOR PANEL
FI	FILM ILLUMINATOR	RGS	RIGID GALVANIZED STEEL
FIXT	FIXTURE	SIG	SIGNAL
FLA	FULL LOAD AMPERES	SS	SAFETY SWITCH
FLUOR	FLUORESCENT	STA	STATION
FSCP	FLAME SAFEGUARD CONTROL PANEL	TEL	TELEPHONE
FSS	FUSED SAFETY SWITCH	TV	TELEVISION
G, GND	GROUND	TYP	TYPICAL
GEN	ENGINE GENERATOR SET	UH	UNIT HEATER
GFCI	GROUND FAULT CIRCUIT INTERRUPTER	UON	UNLESS OTHERWISE NOTED
		V	VOLTAGE
GFGI	GOVERNMENT FURNISHED GOVERNMENT INSTALLED	VA	VOLT-AMPERES
		VP	VAPOR PROOF
>=	GREATER THAN OR EQUAL TO	W	WIRE
GFI	GROUND FAULT INTERRUPTER	W/	WITH
GFP	GROUND FAULT PROTECTION	WP	WEATHER PROOF
GTB	GROUND TERMINAL BOX	WT	WATER TIGHT
HGT	HEIGHT	XFMR	TRANSFORMER
HH	HANDHOLE		
HID	HIGH INTENSITY DISCHARGE		
HOA	HAND-OFF-AUTOMATIC		

NOTES:

SHEET NOTES:

1. INSTALL ALL EQUIPMENT AND DEVICES AT THE HEIGHT INDICATED ON THIS SHEET UNLESS OTHERWISE NOTED. REFER TO ARCHITECTURAL INTERIOR ELEVATIONS FOR SPECIAL MOUNTING HEIGHTS AND LOCATIONS OF ELECTRICAL DEVICES. MOUNTING HEIGHTS AND LOCATIONS INDICATED ON ARCHITECTURAL ELEVATIONS TAKE PRECEDENCE OVER MOUNTING HEIGHTS AND LOCATIONS INDICATED ON ELECTRICAL PLANS.
2. LUMINAIRES INDICATED AS FOLLOWS: UPPER CASE LETTER WITH NUMERAL DENOTES FIXTURE TYPE (SEE LUMINAIRE SCHEDULE), LOWER CASE LETTER (IF SHOWN) DENOTES SWITCHING ARRANGEMENT AND NUMERAL BY ITSELF (IF SHOWN) DENOTES CIRCUIT NUMBER.
3. WHERE DEVICES ARE INDICATED TO BE MOUNTED ABOVE A COUNTERTOP, MOUNT DEVICE SUCH THAT BOTTOM OF COVER PLATE IS 51mm (2") ABOVE TOP OF BACK SPLASH. IF THERE IS NO BACK SPLASH, MOUNT DEVICE 51mm (2") ABOVE FINSHED COUNTER TOP SURFACE TO BOTTOM OF DEVICE COVER PLATE.
4. WHERE MULTIPLE TOGGLE SWITCHES ARE SHOWN TO BE MOUNTED ADJACENT TO ONE ANOTHER, MOUNT SWITCHES IN A SINGLE BOX UP TO 4-GANG (NORMAL AND EMERGENCY CIRCUITS SHALL NOT OCCUPY THE SAME ENCLOSURE).
5. ALL MATERIALS AND EQUIPMENT SHALL BE LISTED AS COMPLYING WITH THE APPLICABLE STANDARDS OF UNDERWRITERS LABORATORIES, INC.
6. PROVIDE DISCONNECTING MEANS FOR ALL ELECTRICALLY OPERATED AUTOMATIC DOOR OPERATORS. DISCONNECTING MEANS SHALL BE A 20A, 120V TOGGLE SWITCH MOUNTED ABOVE THE FINISHED ACCESSIBLE CEILING ADJACENT TO THE DOOR OPERATOR.
7. THE PANELBOARD, SWITCHBOARD AND SWITCHGEAR SUPPLIER SHALL BE RESPONSIBLE FOR PROVIDING OVERCURRENT PROTECTIVE DEVICES THAT ARE SELECTIVELY COORDINATED. SELECTIVE COORDINATION IS DEFINED AS "LOCALIZATION OF AN OVERCURRENT CONDITION TO RESTRICT OUTAGES TO THE CIRCUIT OR EQUIPMENT AFFECTED, ACCOMPLISHED BY THE CHOICE OF OVERCURRENT PROTECTIVE DEVICES AND THEIR RATINGS OR SETTINGS."
8. VERIFY LOCATION OF ALL FLOOR-MOUNTED OUTLETS WITH RESIDENT ENGINEER PRIOR TO ROUGH-IN.

100% SUBMITTAL

AECOM
AECOM TECHNICAL SERVICES, INC.
3101 WILSON BOULEVARD
SUITE 900
ARLINGTON, VA 22201
T: 703-682-4900 F: 703.682.4901
www.aecom.com

SEAL AREA
STATE OF MARYLAND JIEER REN No. 40964 PROFESSIONAL ENGINEER 10-11-2012

KEY PLAN

REV	DATE	DESCRIPTION	S&R BR.	CUSTOMER	PM	SECT. HEAD

	INITIALS	DATE
DRAWN BY	LB/BF	
CHECKED BY	JR/MM	
A-E MANAGER	EW	
ENVIRONMENTAL BRANCH	JH	
SAFETY BRANCH	CS	
CM	MMD	
PM	RWP	
CUSTOMER	JWB	
ENG. BRANCH	DGL	

SYMBOLS AND LEGENDS

E-001

FLIGHT PROJECTS BUILDING

NATIONAL AERONAUTICS AND SPACE ADMINISTRATION
GODDARD SPACE FLIGHT CENTER GREENBELT, MARYLAND
FACILITIES MANAGEMENT DIVISION

DATE ISSUED	CoF CODE OR WR#	AECOM PROJECT NO.	SCALE
10/12/2012	12GXAZ	60187636	As indicated

FILE DATE: 10/11/2012 2:14:07 PM

FACTORY SETTINGS

127, 227	85% = 102V
127X, 227X	5 SEC
127Y, 227Y	3 MIN
62X1	25 SEC
62X2	5 SEC

NOTE: CONTROL TRANSFORMERS NOT REQUIRED FOR 120/208 VOLT SWITCHGEAR.

CS - CONTROL SWITCH

CONTACTS	POSITIONS		
	CLOSE	NORM	TRIP
C	X		
T			X

X - DENOTES CONTACTS CLOSED

43 - MANUAL / AUTO SWITCH

CONTACTS	POSITIONS	
	MANUAL	AUTO
M	X	
A		X

X - DENOTES CONTACTS CLOSED

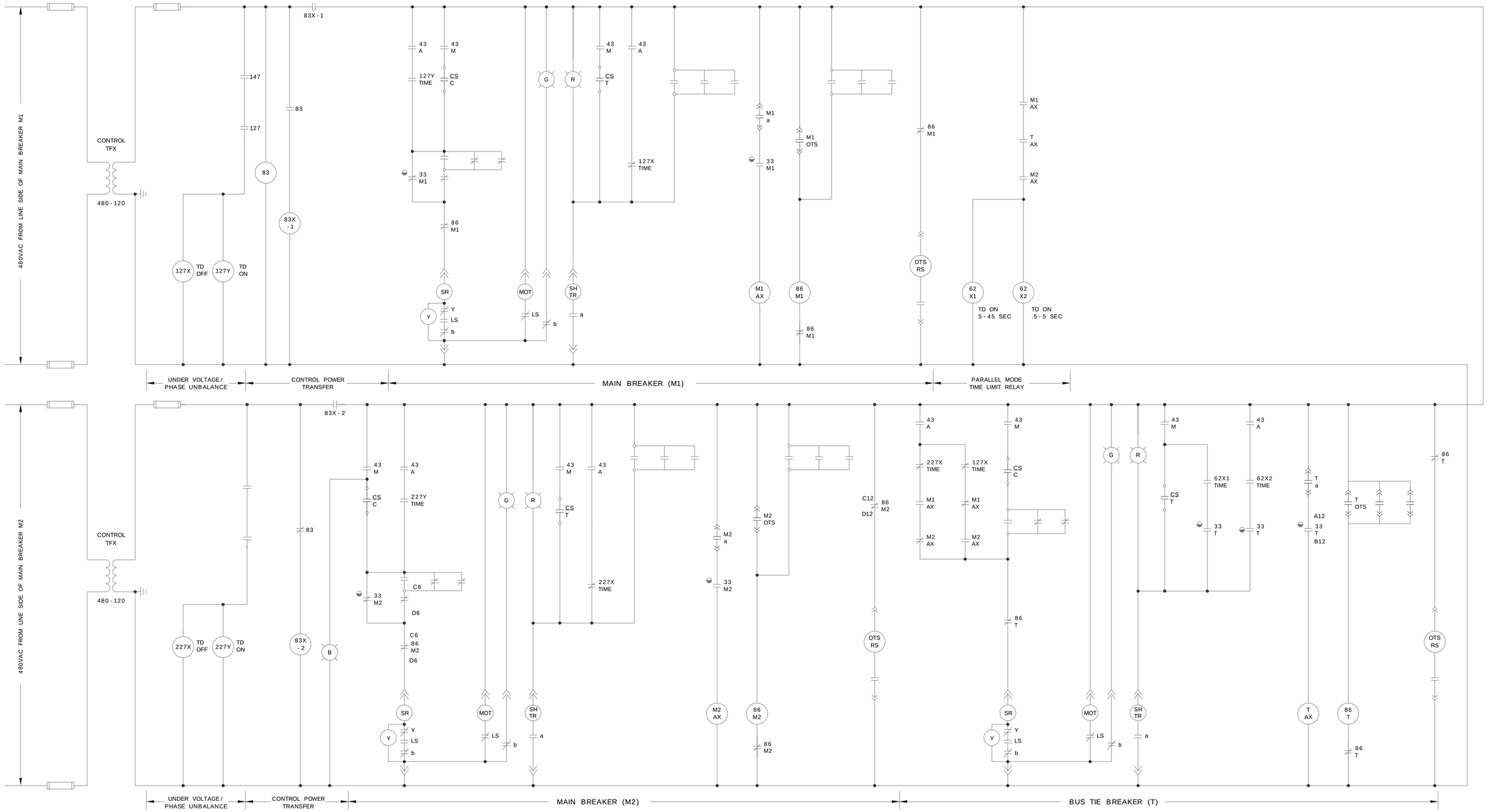

NORMAL CONDITIONS
1. BOTH SOURCES AT NORMAL VOLTAGE
2. MAIN BREAKERS M1 AND M2 CLOSED
3. BUS TIE BREAKER T OPEN
4. MODE SELECTOR SWITCH (43) IN 'AUTOMATIC' POSITION

AUTOMATIC POSITION
ASSUME LOSS OF VOLTAGE OR LOW VOLTAGE ON THE LINE SIDE OF MAIN BREAKER M1. THE VOLTAGE SENSING RELAY (127) WILL DROP OUT AND DE-ENERGIZE THE OFF DELAY TIMER 127X (ADJ. 1-300 SEC.). AFTER 127X TIMES OUT, MAIN BREAKER M1 WILL OPEN VIA 43A, 127X TIME AND 227X TIME. AS SOON AS MAIN BREAKER M1 IS TRIPPED, BUS TIE BREAKER T WILL CLOSE THROUGH THE 43A, 127X TIME, M1AX, M2AX AND LOCK-OUT CIRCUIT. WHEN NORMAL VOLTAGE IS RESTORED TO THE LINE SIDE OF MAIN BREAKER M1, THE VOLTAGE SENSING RELAY (127) WILL PICKUP AND ENERGIZE THE TIME DELAY RELAY 127Y (ADJ. 30-300 SEC.). AFTER 127Y TIMES OUT, MAIN BREAKER M1 WILL CLOSE THROUGH THE 43A, 127Y TIME, SYNC CHECK RELAY(25) AND LOCKOUT CIRCUIT. TIMER 62X2 WILL ENERGIZE THROUGH M1AX, TAX, AND M2AX. AFTER 62X2 TIMES OUT THE TIE BREAKER T WILL TRIP THROUGH 62X2 AND 43A.

IF VOLTAGE IS LOST ON THE LINE SIDE OF MAIN BREAKER M2, THE SAME OPERATION WILL OCCUR WITH MAIN BREAKER M2 THROUGH IT'S ASSOCIATED RELAYS.

MANUAL OPERATION
WITH THE MODE SELECTOR SWITCH IN THE MANUAL POSITION, CONTROL OF THE BREAKERS IS PLACED IN THE HANDS OF THE OPERATOR. BREAKERS MAY BE OPENED AND CLOSED BY MEANS OF THEIR RESPECTIVE CONTROL SWITCHES. BREAKERS MAY BE MOMENTARILY PARALLELED IN THE MANUAL MODE, HOWEVER TIMER 62X1 WILL TRIP THE TIE (ADJUSTABLE 5-45 SEC) IF THE OPERATOR ATTEMPTS TO LEAVE THE SOURCES PARALLELED. WHEN MANUALLY CLOSING A BREAKER THAT PARALLELS TWO SOURCES, THE CONTROL SWITCH MUST BE HELD IN THE CLOSED POSITION FOR THE TIME DELAY PERIOD OF THE SYNC CHECK RELAY, DEVICE 25 (0-20 SECONDS).

LOCK-OUT
IF EITHER OF THE MAIN BREAKERS OR THE BUS TIE BREAKER TRIPS DUE TO A FAULT CONDITION, ALL AUTOMATIC OPERATION OF THE BREAKERS IS LOCKED OUT. THIS CIRCUITRY MUST BE RESET AFTER THE FAULT CONDITION HAS BEEN CORRECTED.

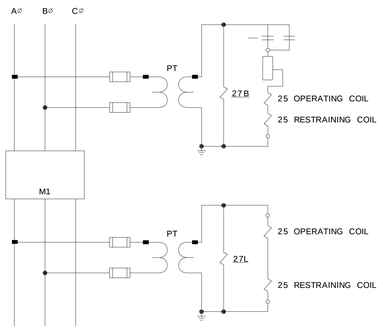

TYPICAL CONNECTION FOR 25 (SYNCHRONIZING CHECK RELAY). INCLUDES 27 (UNDERVOLTAGE) RELAY TO ALLOW CLOSING TO DEAD BUS. 1 REQUIRED EACH FOR BREAKERS M1, M2, & T. POTENTIAL TRANSFORMERS (PT) NOT REQUIRED FOR 120/208 VOLT BUS. 27Y CONTACT NOT USED FOR TIE BREAKER.

LEGEND

167A	CONTACTS FROM 67 (DIRECTIONAL CURRENT RELAY) DEVICE. PREFIX INDICATES MAIN 1 OR 2, SUFFIX INDICATES PHASE. 67 DEVICE CONNECTIONS AND CURRENT TRANSFORMERS NOT SHOWN.
127 147	CONTACTS FROM 27/47 (UNDERVOLTAGE, PHASE REVERSAL & PHASE UNBALANCE) DEVICE. PREFIX INDICATES MAIN 1 OR 2. POTENTIAL TRANSFORMERS (WHEN REQUIRED) AND 27/47 DEVICE CONNECTIONS NOT SHOWN.
127X	TRANSFER DELAY (ANSI 62 DEVICE). PREFIX INDICATES MAIN 1 OR 2.
127Y	RETRANSFER DELAY (ANSI 62 DEVICE). PREFIX INDICATES MAIN 1 OR 2.
83	AUTOMATIC TRANSFER RELAY FOR CONTROL POWER
	FUSE
R	RED LIGHT INDICATES BREAKER CLOSED
G	GREEN LIGHT INDICATES BREAKER OPEN
B	BLUE LIGHT INDICATES MANUAL MODE
Y	ANTI-PUMP RELAY
43	POSITION SWITCH AUTO/MANUAL CONTROL
86	LOCKOUT RELAY

LEGEND

a	BREAKER (CONTACT NORMALLY OPEN WHEN BREAKER IS IN OPEN POSITION)
b	BREAKER (CONTACT NORMALLY CLOSED WHEN BREAKER IS IN OPEN POSITION)
TD	TIME DELAY
SR	SPRING RELEASE, CLOSES BREAKER
MOT	MOTOR (SPRING CHARGING)
SHTR	SHUNT TRIP, OPENS BREAKER
OTS	OVERCURRENT TRIP SWITCH
RS	RESET
AX	AUXILIARY
TFX	TRANSFORMER
CS	CONTROL SWITCH
C	CLOSE
T	TRIP
LS	LIMIT SWITCH
33	BREAKER CELL SWITCH SHOWN WITH BREAKER IN THE TEST OR DISCONNECT POSITION

NORTH

100% SUBMITTAL

AECOM
AECOM TECHNICAL SERVICES, INC.
3101 WILSON BOULEVARD
SUITE 900
ARLINGTON, VA 22201
T: 703-682-4900 F: 703.682.4901
www.aecom.com

SEAL AREA

STATE OF MARYLAND
JEEBEN
10-11-2012
NO. 40964
PROFESSIONAL ENGINEER

KEY PLAN

REV	DATE	DESCRIPTION	S&R BR.	CUSTOMER	PM	SECT. HEAD

	INITIALS	DATE
DRAWN BY	LB/BF	
CHECKED BY	JR/MM	
A-E MANAGER	EW	
ENVIRONMENTAL BRANCH	JH	
SAFETY BRANCH	CS	
CM	MMD	
PM	RWP	
CUSTOMER	JWB	
ENG. BRANCH	DGL	

CONTROL LOGIC DIAGRAM

E-002

FLIGHT PROJECTS BUILDING

NATIONAL AERONAUTICS AND SPACE ADMINISTRATION
GODDARD SPACE FLIGHT CENTER GREENBELT, MARYLAND
FACILITIES MANAGEMENT DIVISION

DATE ISSUED	CoF CODE OR WR#	AECOM PROJECT NO.	SCALE
10/12/2012	12GXAZ	60187636	NTS

FILE DATE: 10/11/2012 2:14:08 PM

NASA STANDARD SERVICE SWITCHGEAR CONTROL DIAGRAM

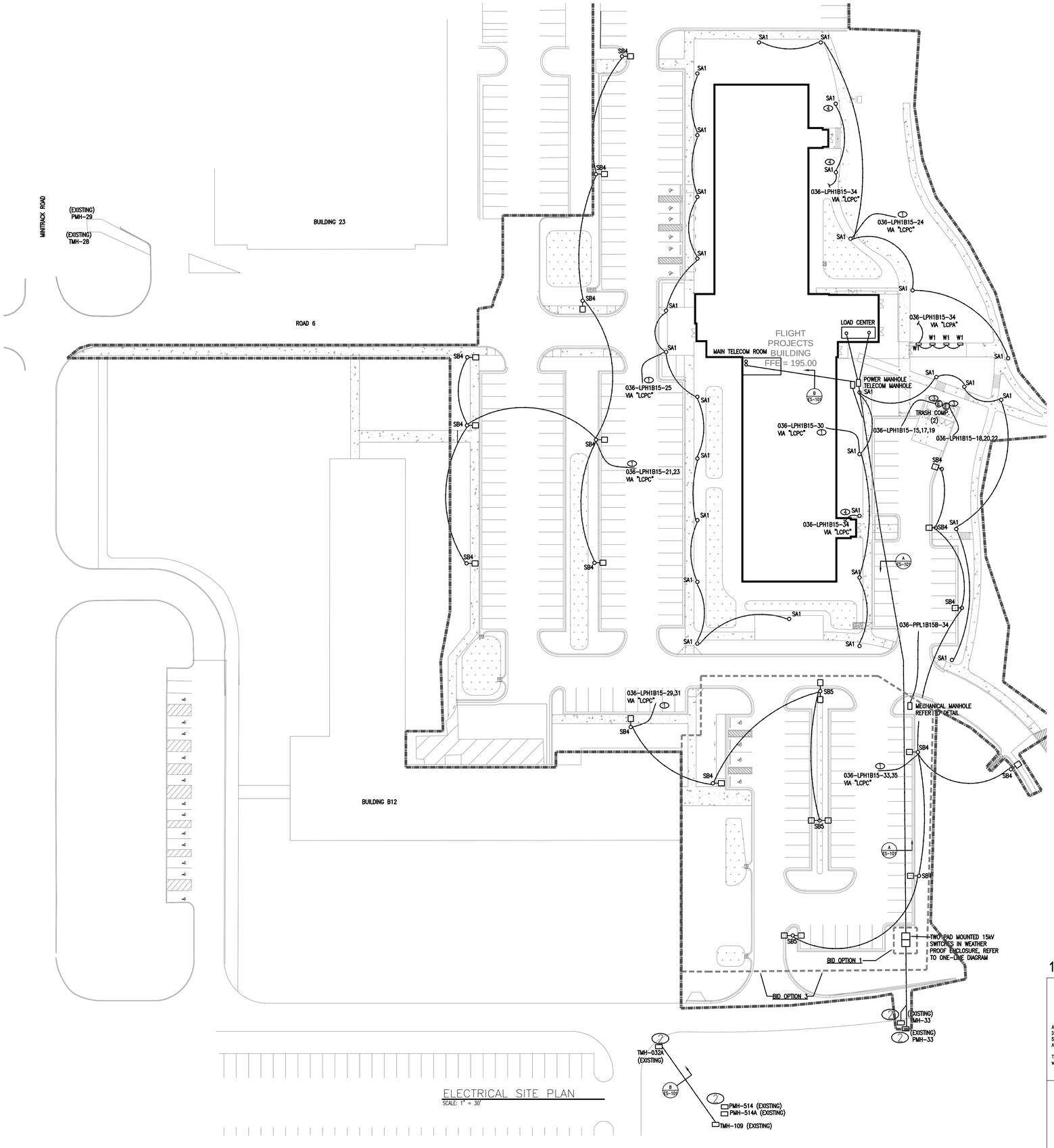

ELECTRICAL SITE PLAN
SCALE: 1" = 30'

GENERAL NOTES

A. REFER TO E-800 FOR ADDITIONAL DETAILS.

KEY NOTES

1. 2 #6 + 1 #6G, 2"C
2. APPROXIMATE LOCATION OF EXISTING MANHOLES, REFER TO CIVIL DRAWING C-105 FOR ADDITIONAL INFORMATION.
3. 4 #10 + 1 #10G, 3/4"C
4. THIS FIXTURE IS ALSO ENERGIZED BY PANEL ELPH1D4-6

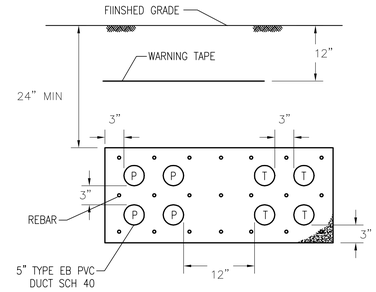

A ES-101 TYPICAL 8 WAY COMBINATION DUCTBANK DETAIL
NTS

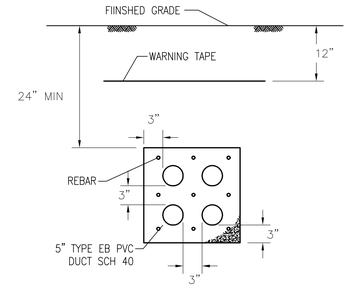

B ES-101 TYPICAL 4 WAY DUCTBANK DETAIL
NTS

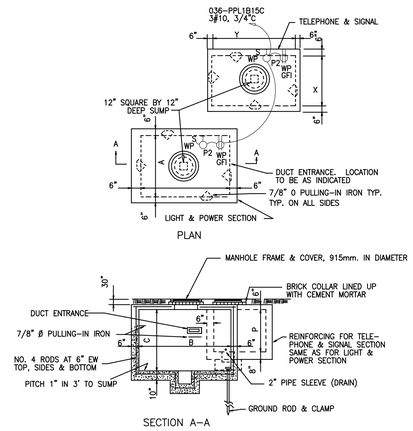

MANHOLE DIMENSIONS							
	POWER			SIGNAL			
TYPE	A	B	C	X	Y	P	
1	10'-0"	7'-0"	7'-0"	10'-0"	7'-0"	7'-0"	

TYPICAL MANHOLE DETAIL
NTS

1" = 30'-0" 0 30' 60'

100% SUBMITTAL

AECOM
AECOM TECHNICAL SERVICES, INC.
3101 WILSON BOULEVARD
SUITE 900
ARLINGTON, VA 22201
T: 703-682-4900 F: 703.682.4901
www.aecom.com

SEAL AREA

STATE OF MARYLAND
JEFFREY A. WEEDEN
No. 40961
PROFESSIONAL ENGINEER

REV	DATE	DESCRIPTION	S&R BR.	CUSTOMER	PM	SECT. HEAD
A	08/06/2012	AMENDMENT NO. 2				

KEY PLAN

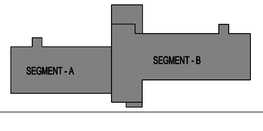

	INITIALS	DATE
DRAWN	LB/BF	
CHECKED BY	JR/MM	
A-E MANAGER	EW	
ENVIRONMENTAL BRANCH	JH	
SAFETY BRANCH	CS	
CM	MMD	
PM	RWP	
CUSTOMER	JWB	
ENG. BRANCH	DGL	

ELECTRICAL SITE PLAN

ES101

FLIGHT PROJECTS BUILDING

NATIONAL AERONAUTICS AND SPACE ADMINISTRATION
GODDARD SPACE FLIGHT CENTER GREENBELT, MARYLAND
FACILITIES MANAGEMENT DIVISION

DATE ISSUED	CoF CODE OR WR#	AECOM PROJECT NO.	SCALE
10/12/2012	12GXAZ	60187636	

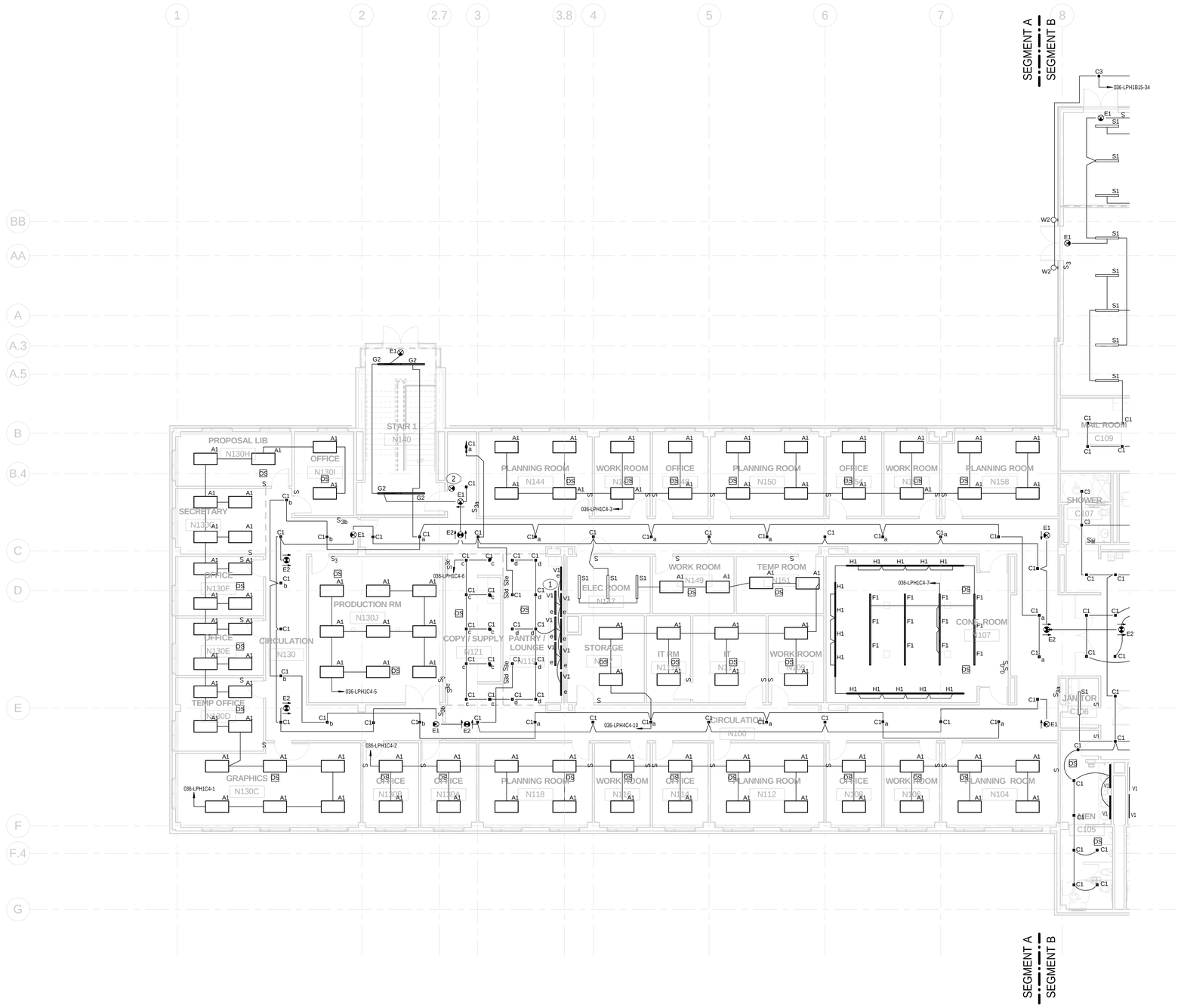

GENERAL NOTES:

1. OCCUPANCY SENSORS SHALL CONTROL ALL LIGHT FIXTURES WITHIN THE ROOM INCLUDING UNDERCOUNTER LIGHTS, UNLESS NOTED OTHERWISE.
2. ROOM WALL SWITCHES SHALL CONTROL ALL LIGHT FIXTURES WITHIN THE ROOM, INCLUDING UNDER CABINET LIGHTS.
3. WHERE MULTIPLE OCCUPANCY SENSORS ARE LOCATED WITHIN A SINGLE ROOM, LIGHT FIXTURES SHALL REMAIN "ON" UPON ACTIVATION OF EITHER SENSOR.
4. LIGHTING FIXTURE CIRCUITS SHALL "NOT BE DAISY CHAINED".

KEY NOTES:

1. MOUNT ONE SET OF TYPE V1 FIXTURES ABOVE CABINETS AND ONE SET UNDER CABINETS. REFER TO ARCHITECTURAL ELEVATIONS.

2. FIRE ALARM EGREE SIGNAGE SHALL BE ENERGIZED BY THE NEAREST EGREE LIGHTING CIRCUIT. COORDINATE WITH FIRE ALARM DRAWINGS.

100% SUBMITTAL

NORTH

1/8"=1'-0" 8' 4' 0 8' 16'

AECOM

AECOM TECHNICAL SERVICES, INC.
3101 WILSON BOULEVARD
SUITE 900
ARLINGTON, VA 22201

T: 703-682-4900 F: 703.682.4901
www.aecom.com

SEAL AREA

STATE OF MARYLAND
JEEB RAM
10-11-2012
No. 40961
PROFESSIONAL ENGINEER

KEY PLAN

SEGMENT - A

REV	DATE	DESCRIPTION	S&R BR.	CUSTOMER	PM	SECT. HEAD

	INITIALS	DATE
DRAWN BY	LB/BF	
CHECKED BY	JR/MM	
A-E MANAGER	EW	
ENVIRONMENTAL BRANCH	JH	
SAFETY BRANCH	CS	
CM	MMD	
PM	RWP	
CUSTOMER	JWB	
ENG. BRANCH	DGL	

LEVEL-1 ELECTRICAL LIGHTING PLAN SEGMENT A

E-101a

FLIGHT PROJECTS BUILDING

NATIONAL AERONAUTICS AND SPACE ADMINISTRATION

GODDARD SPACE FLIGHT CENTER GREENBELT, MARYLAND
FACILITIES MANAGEMENT DIVISION

DATE ISSUED	CoF CODE OR WR#	AECOM PROJECT NO.	SCALE
10/12/2012	12GXAZ	60187636	1/8" = 1'-0"

FILE DATE : 10/11/2012 2:14:10 PM

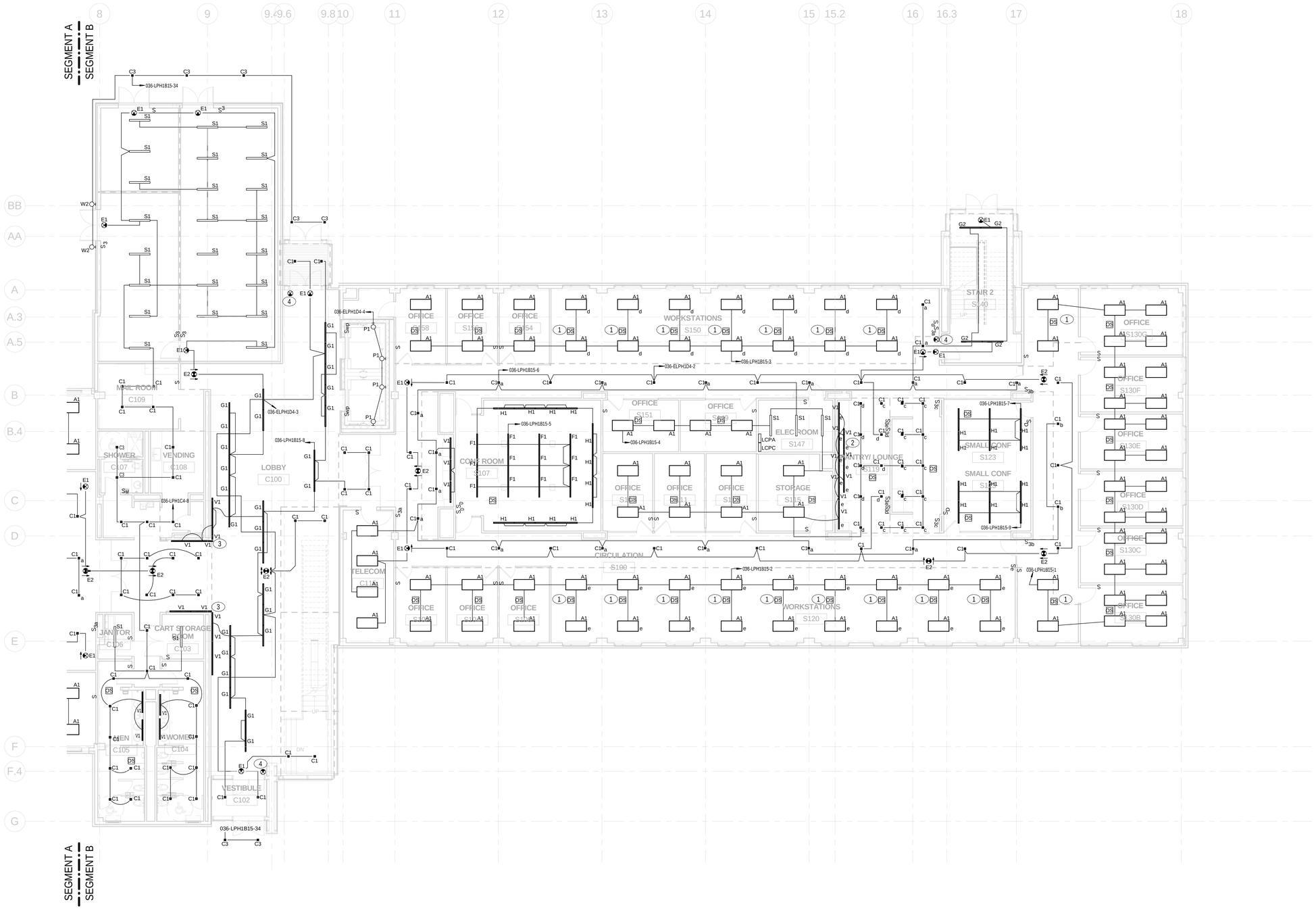

GENERAL NOTES:

1. OCCUPANCY SENSORS SHALL CONTROL ALL LIGHT FIXTURES WITHIN THE ROOM INCLUDING UNDERCOUNTER LIGHTS, UNLESS NOTED OTHERWISE.
2. ROOM WALL SWITCHES SHALL CONTROL ALL LIGHT FIXTURES WITHIN THE ROOM, INCLUDING UNDER CABINET LIGHTS.
3. WHERE MULTIPLE OCCUPANCY SENSORS ARE LOCATED WITHIN A SINGLE ROOM, LIGHT FIXTURES SHALL REMAIN "ON" UPON ACTIVATION OF EITHER SENSOR.
4. LIGHTING FIXTURE CIRCUITS SHALL "NOT BE DAISY CHAINED".

KEY NOTES:

1. OCCUPANCY SENSOR SHALL CONTROL THE TWO ADJACENT FIXTURES. REFER TO OPEN OFFICE LIGHTING CONTROL DETAIL.
2. MOUNT ONE SET OF TYPE V1 FIXTURES ABOVE CABINETS AND ONE SET UNDER CABINETS. REFER TO ARCHITECTURAL ELEVATIONS.
3. PROVIDE 3 SETS OF TYPE V1 FIXTURES AT THIS LOCATION. MOUNT ONE SET PER SHELF LEVEL. REFER TO ARCHITECTURAL ELEVATIONS.
4. FIRE ALARM EGRESS SIGNAGE SHALL BE ENERGIZED BY THE NEAREST EGRESS LIGHTING CIRCUIT. COORDINATE WITH FIRE ALARM DRAWINGS.

100% SUBMITTAL

NORTH

1/8"=1'-0" 8' 4' 0 8' 16'

AECOM
AECOM TECHNICAL SERVICES, INC.
3101 WILSON BOULEVARD
SUITE 900
ARLINGTON, VA 22201
T: 703-682-4900 F: 703.682.4901
www.aecom.com

SEAL AREA

STATE OF MARYLAND
JIEEB BIN
No. 40964
PROFESSIONAL ENGINEER
10-11-2012

KEY PLAN

SEGMENT - B

REV	DATE	DESCRIPTION	S&R BR.	CUSTOMER	PM	SECT. HEAD

	INITIALS	DATE
DRAWN BY	LB/BF	
CHECKED BY	JR/MM	
A-E MANAGER	EW	
ENVIRONMENTAL BRANCH	JH	
SAFETY BRANCH	CS	
CM	MMD	
PM	RWP	
CUSTOMER	JWB	
ENG. BRANCH	DGL	

LEVEL-1 ELECTRICAL LIGHTING PLAN SEGMENT B

E-101b

FLIGHT PROJECTS BUILDING

NATIONAL AERONAUTICS AND SPACE ADMINISTRATION
GODDARD SPACE FLIGHT CENTER GREENBELT, MARYLAND
FACILITIES MANAGEMENT DIVISION

DATE ISSUED	CoF CODE OR WR#	AECOM PROJECT NO.	SCALE
10/12/2012	12GXAZ	60187636	1/8" = 1'-0"

FILE DATE: 10/11/2012 2:14:14 PM

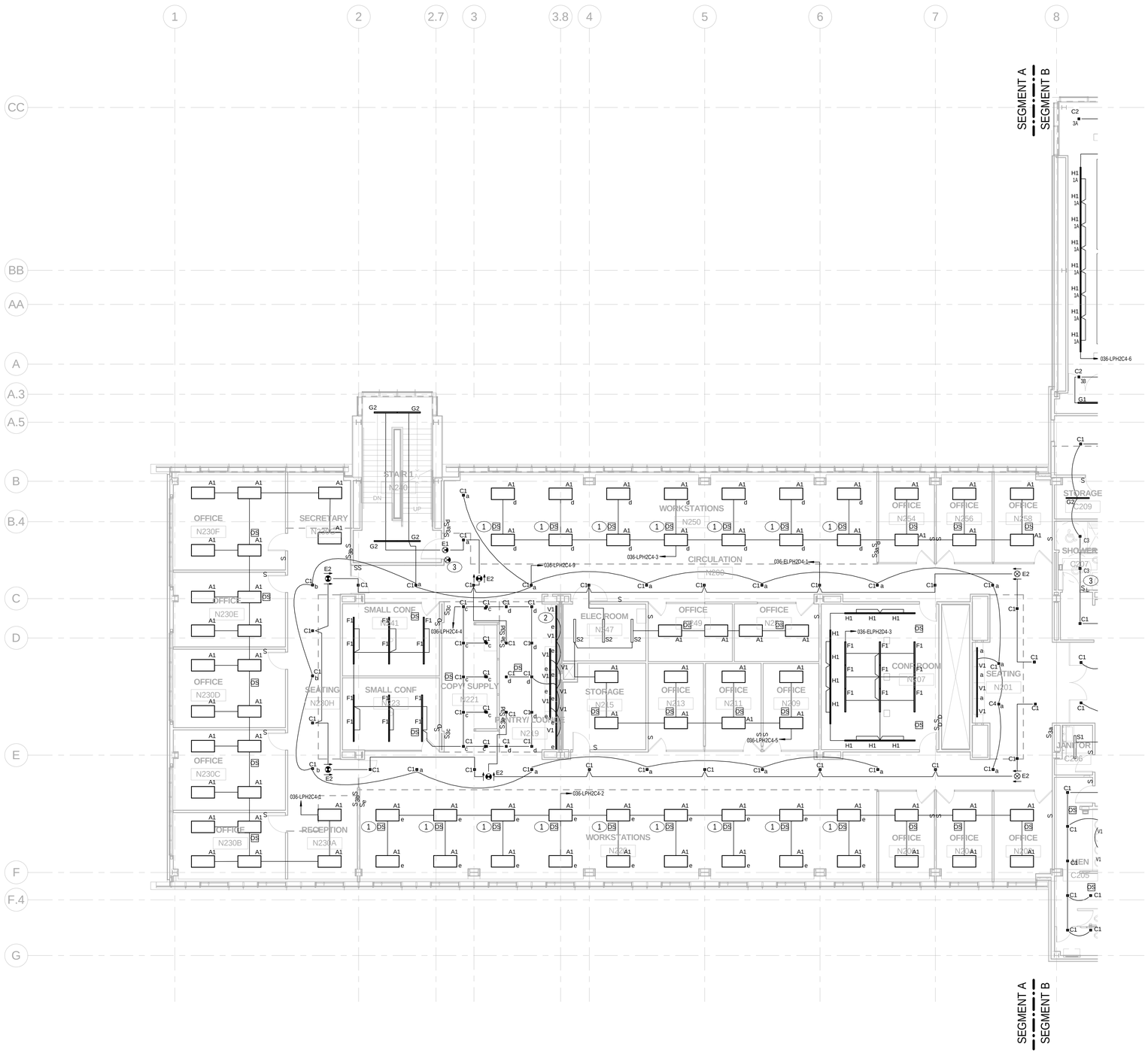

GENERAL NOTES:

1. OCCUPANCY SENSORS SHALL CONTROL ALL LIGHT FIXTURES WITHIN THE ROOM INCLUDING UNDERCOUNTER LIGHTS, UNLESS NOTED OTHERWISE.
2. ROOM WALL SWITCHES SHALL CONTROL ALL LIGHT FIXTURES WITHIN THE ROOM, INCLUDING UNDER CABINET LIGHTS.
3. WHERE MULTIPLE OCCUPANCY SENSORS ARE LOCATED WITHIN A SINGLE ROOM, LIGHT FIXTURES SHALL REMAIN "ON" UPON ACTIVATION OF EITHER SENSOR.
4. LIGHTING FIXTURE CIRCUITS SHALL "NOT BE DAISY CHAINED".

KEY NOTES:

1. OCCUPANCY SENSOR SHALL CONTROL THE TWO ADJACENT FIXTURES. REFER TO OPEN OFFICE LIGHTING CONTROL DETAIL.
2. MOUNT ONE SET OF TYPE V1 FIXTURES ABOVE CABINETS AND ONE SET UNDER CABINETS. REFER TO ARCHITECTURAL ELEVATIONS.
3. FIRE ALARM EGRESS SIGNAGE SHALL BE ENERGIZED BY THE NEAREST EGRESS LIGHTING CIRCUIT. COORDINATE WITH FIRE ALARM DRAWINGS.

100% SUBMITTAL

NORTH

1/8"=1'-0" 8' 4' 0 8' 16'

AECOM

AECOM TECHNICAL SERVICES, INC.
3101 WILSON BOULEVARD
SUITE 900
ARLINGTON, VA 22201

T: 703-682-4900 F: 703.682.4901
www.aecom.com

SEAL AREA

STATE OF MARYLAND
JEEB BEN
No. 40968
PROFESSIONAL ENGINEER
10-11-2012

KEY PLAN

SEGMENT - A

REV	DATE	DESCRIPTION	S&R BR.	CUSTOMER	PM	SECT. HEAD

	INITIALS	DATE
DRAWN BY	LB/BF	
CHECKED BY	JR/MM	
A-E MANAGER	EW	
ENVIRONMENTAL BRANCH	JH	
SAFETY BRANCH	CS	
CM	MMD	
PM	RWP	
CUSTOMER	JWB	
ENG. BRANCH	DGL	

LEVEL-2 ELECTRICAL LIGHTING PLAN SEGMENT A

E-102a

FLIGHT PROJECTS BUILDING

NATIONAL AERONAUTICS AND SPACE ADMINISTRATION

GODDARD SPACE FLIGHT CENTER GREENBELT, MARYLAND
FACILITIES MANAGEMENT DIVISION

DATE ISSUED	CoF CODE OR WR#	AECOM PROJECT NO.	SCALE
10/12/2012	12GXAZ	60187636	1/8" = 1'-0"

FILE DATE: 10/11/2012 2:14:17 PM

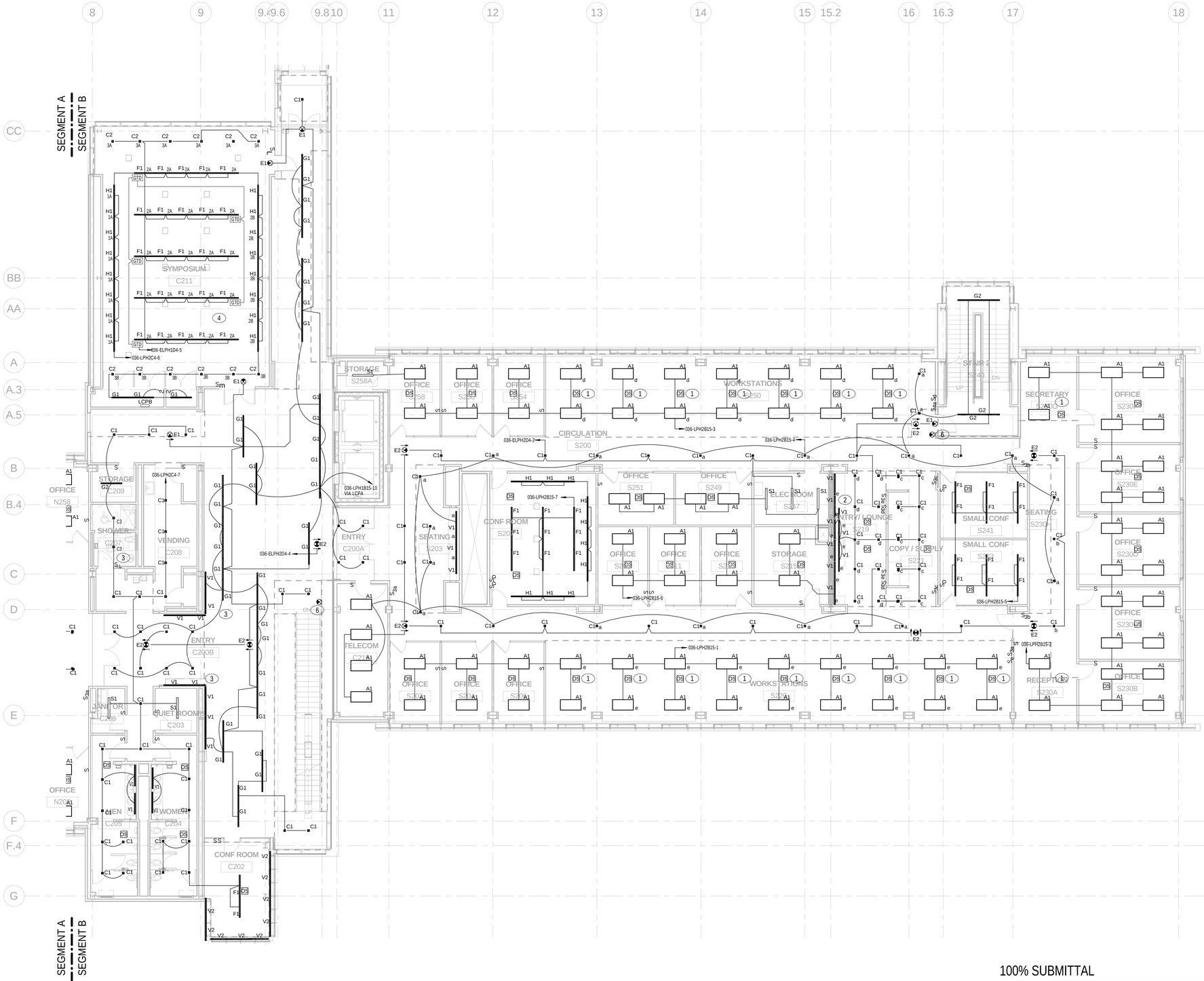

GENERAL NOTES:

1. OCCUPANCY SENSORS SHALL CONTROL ALL LIGHT FIXTURES WITHIN THE ROOM INCLUDING UNDERCOUNTER LIGHTS, UNLESS NOTED OTHERWISE.
2. ROOM WALL SWITCHES SHALL CONTROL ALL LIGHT FIXTURES WITHIN THE ROOM, INCLUDING UNDER CABINET LIGHTS.
3. WHERE MULTIPLE OCCUPANCY SENSORS ARE LOCATED WITHIN A SINGLE ROOM, LIGHT FIXTURES SHALL REMAIN "ON" UPON ACTIVATION OF EITHER SENSOR.
4. LIGHTING FIXTURE CIRCUITS SHALL "NOT BE DAISY CHAINED".

KEY NOTES:

1. OCCUPANCY SENSOR SHALL CONTROL THE TWO ADJACENT FIXTURES. REFER TO OPEN OFFICE LIGHTING CONTROL DETAIL.
2. MOUNT ONE SET OF TYPE V1 FIXTURES ABOVE CABINETS AND ONE SET UNDER CABINETS. REFER TO ARCHITECTURAL ELEVATIONS.
3. PROVIDE 3 SETS OF TYPE V1 FIXTURES AT THIS LOCATION. MOUNT ONE SET PER SHELF LEVEL. REFER TO ARCHITECTURAL ELEVATIONS.
4. REFER TO SHEET E-701 FOR CONTROL SCHEDULE. ALL FIXTURES IN THIS ROOM SHALL BE CONTROLLED BY LCPB. NUMBER AND LETTER DESIGNATION BESIDE FIXTURES INDICATE FIXTURE TYPE AND SWITCH CONTROL.
5. REFER TO SHEET E-701 FOR LOBBY CONTROLS.
6. FIRE ALARM EGRESS SIGNAGE SHALL BE ENERGIZED BY THE NEAREST EGRESS LIGHTING CIRCUIT. COORDINATE WITH FIRE ALARM DRAWINGS.

100% SUBMITTAL

NORTH

1/8"=1'-0" 8' 4' 0 8' 16'

AECOM
AECOM TECHNICAL SERVICES, INC.
3101 WILSON BOULEVARD
SUITE 900
ARLINGTON, VA 22201
T: 703-682-4900 F: 703.682.4901
www.aecom.com

SEAL AREA

STATE OF MARYLAND
JIEEB RAN
No. 40968
PROFESSIONAL ENGINEER
10-11-2012

KEY PLAN

SEGMENT - B

REV	DATE	DESCRIPTION	S&R BR.	CUSTOMER	PM	SECT. HEAD

	INITIALS	DATE
DRAWN BY	LB/BF	
CHECKED BY	JR/MM	
A-E MANAGER	EW	
ENVIRONMENTAL BRANCH	JH	
SAFETY BRANCH	CS	
CM	MMD	
PM	RWP	
CUSTOMER	JWB	
ENG. BRANCH	DGL	

LEVEL-2 ELECTRICAL LIGHTING PLAN SEGMENT B

E-102b

FLIGHT PROJECTS BUILDING

NATIONAL AERONAUTICS AND SPACE ADMINISTRATION
GODDARD SPACE FLIGHT CENTER GREENBELT, MARYLAND
FACILITIES MANAGEMENT DIVISION

DATE ISSUED	CoF CODE OR WR#	AECOM PROJECT NO.	SCALE
10/12/2012	12GXAZ	60187636	1/8" = 1'-0"

FILE DATE: 10/11/2012 2:14:22 PM

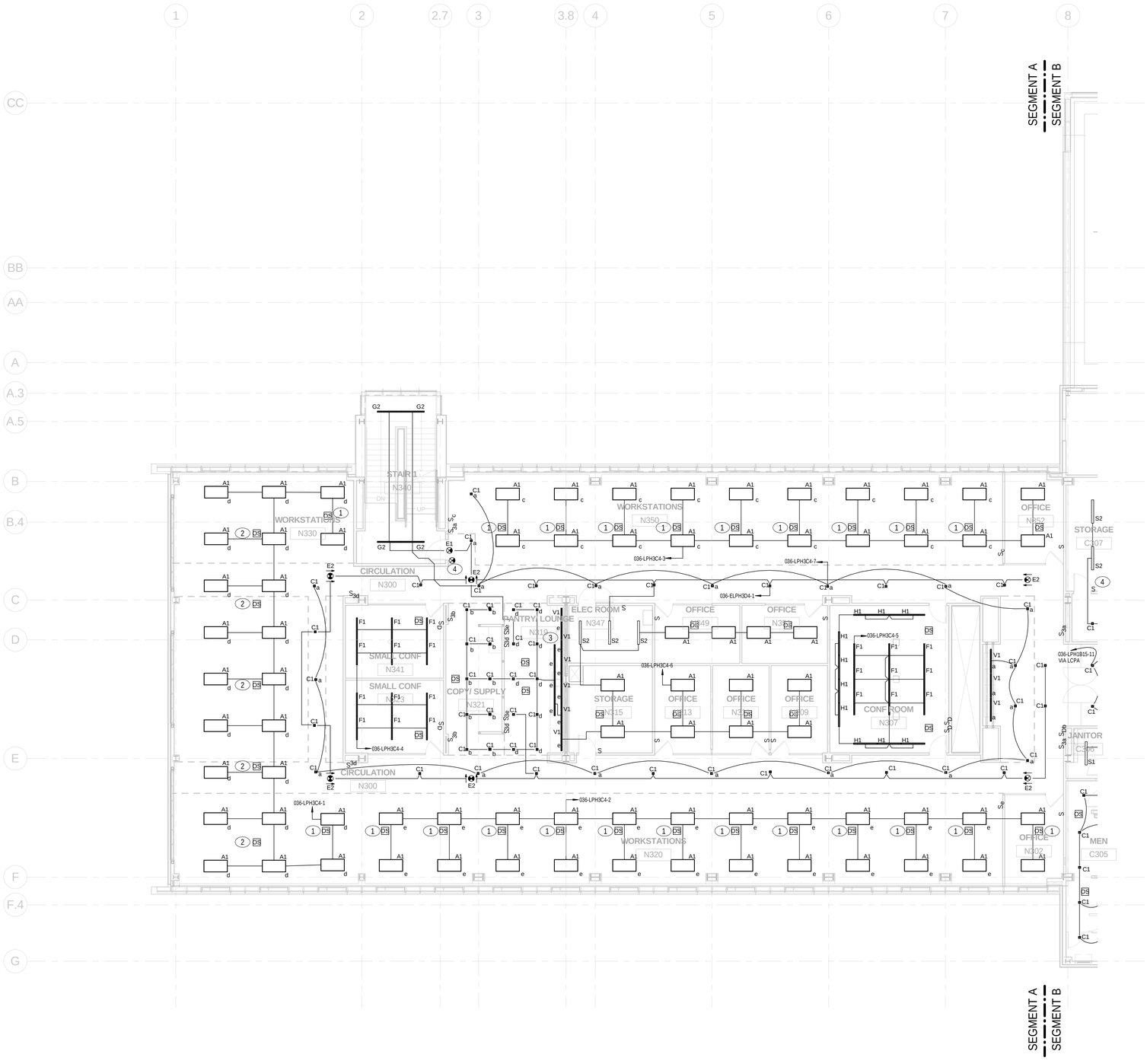

GENERAL NOTES:

1. OCCUPANCY SENSORS SHALL CONTROL ALL LIGHT FIXTURES WITHIN THE ROOM INCLUDING UNDERCOUNTER LIGHTS, UNLESS NOTED OTHERWISE.
2. ROOM WALL SWITCHES SHALL CONTROL ALL LIGHT FIXTURES WITHIN THE ROOM, INCLUDING UNDER CABINET LIGHTS.
3. WHERE MULTIPLE OCCUPANCY SENSORS ARE LOCATED WITHIN A SINGLE ROOM, LIGHT FIXTURES SHALL REMAIN "ON" UPON ACTIVATION OF EITHER SENSOR.
4. LIGHTING FIXTURE CIRCUITS SHALL "NOT BE DAISY CHAINED".

KEY NOTES:

1. OCCUPANCY SENSOR SHALL CONTROL THE TWO ADJACENT FIXTURES. REFER TO OPEN OFFICE LIGHTING CONTROL DETAIL.
2. OCCUPANCY SENSOR SHALL CONTROL THE FOUR ADJACENT FIXTURES.
3. MOUNT ONE SET OF TYPE V1 FIXTURES ABOVE CABINETS AND ONE SET UNDER CABINETS. REFER TO ARCHITECTURAL ELEVATIONS.
4. FIRE ALARM EGRESS SIGNAGE SHALL BE ENERGIZED BY THE NEAREST EGRESS LIGHTING CIRCUIT. COORDINATE WITH FIRE ALARM DRAWINGS.

100% SUBMITTAL

NORTH

1/8"=1'-0" 8' 4' 0 8' 16'

AECOM

AECOM TECHNICAL SERVICES, INC.
3101 WILSON BOULEVARD
SUITE 900
ARLINGTON, VA 22201

T: 703-682-4900 F: 703.682.4901
www.aecom.com

SEAL AREA

STATE OF MARYLAND
JEEBEN
10-11-2012
NO. 40968
PROFESSIONAL ENGINEER

KEY PLAN

SEGMENT - A

REV	DATE	DESCRIPTION	S&R BR.	CUSTOMER	PM	SECT. HEAD

	INITIALS	DATE
DRAWN BY	LB/BF	
CHECKED BY	JR/MM	
A-E MANAGER	EW	
ENVIRONMENTAL BRANCH	JH	
SAFETY BRANCH	CS	
CM	MMD	
PM	RWP	
CUSTOMER	JWB	
ENG. BRANCH	DGL	

LEVEL-3 ELECTRICAL LIGHTING PLAN SEGMENT A

E-103a

FLIGHT PROJECTS BUILDING

NATIONAL AERONAUTICS AND SPACE ADMINISTRATION

GODDARD SPACE FLIGHT CENTER GREENBELT, MARYLAND
FACILITIES MANAGEMENT DIVISION

DATE ISSUED	CoF CODE OR WR#	AECOM PROJECT NO.	SCALE
10/12/2012	12GXAZ	60187636	1/8" = 1'-0"

FILE DATE: 10/11/2012 2:14:25 PM

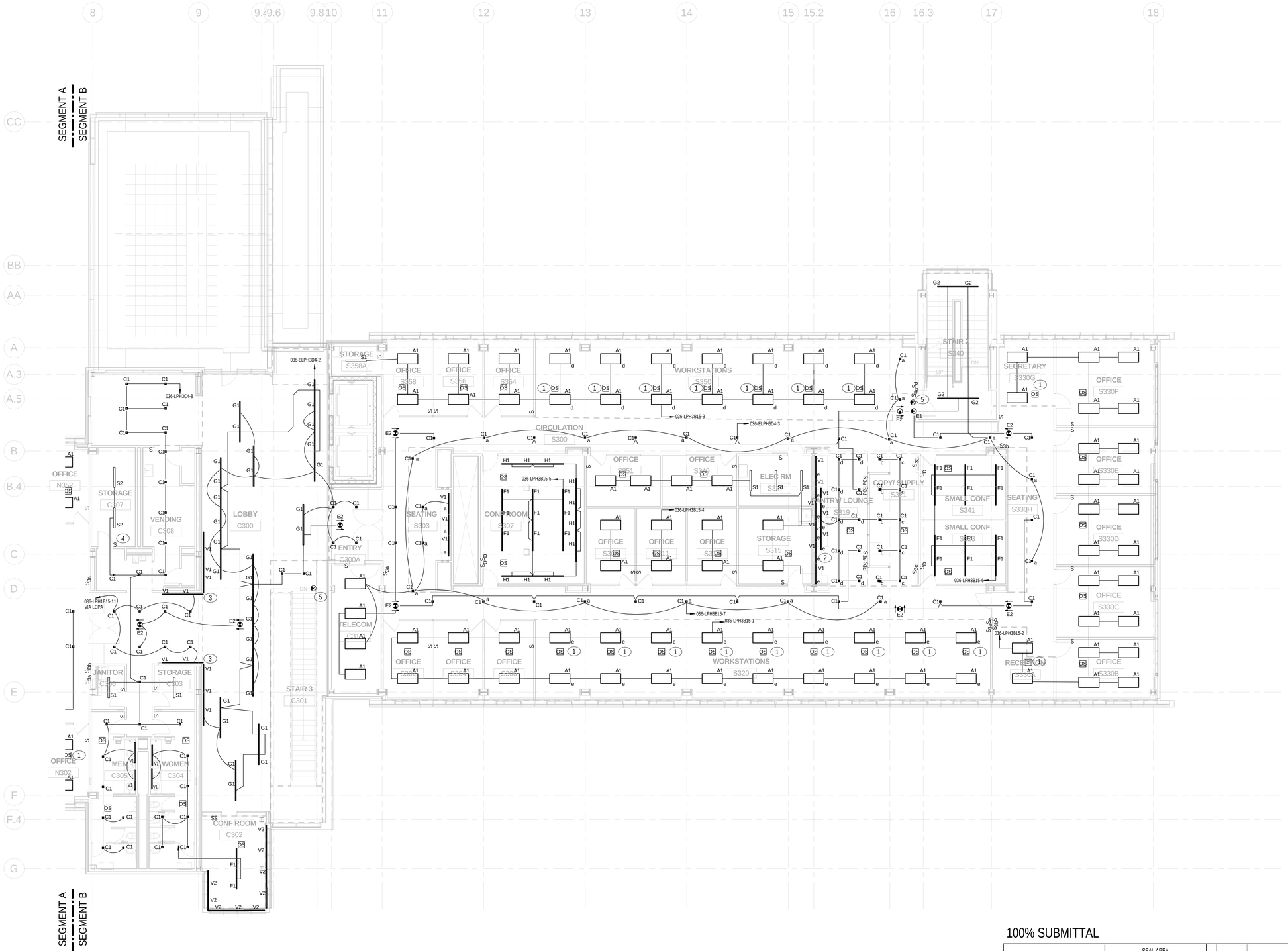

GENERAL NOTES:

1. OCCUPANCY SENSORS SHALL CONTROL ALL LIGHT FIXTURES WITHIN THE ROOM INCLUDING UNDERCOUNTER LIGHTS, UNLESS NOTED OTHERWISE.
2. ROOM WALL SWITCHES SHALL CONTROL ALL LIGHT FIXTURES WITHIN THE ROOM, INCLUDING UNDER CABINET LIGHTS.
3. WHERE MULTIPLE OCCUPANCY SENSORS ARE LOCATED WITHIN A SINGLE ROOM, LIGHT FIXTURES SHALL REMAIN "ON" UPON ACTIVATION OF EITHER SENSOR.
4. LIGHTING FIXTURE CIRCUITS SHALL "NOT BE DAISY CHAINED".

KEY NOTES:

1. OCCUPANCY SENSOR SHALL CONTROL THE TWO ADJACENT FIXTURES. REFER TO OPEN OFFICE LIGHTING CONTROL DETAIL.
2. MOUNT ONE SET OF TYPE V1 FIXTURES ABOVE CABINETS AND ONE SET UNDER CABINETS. REFER TO ARCHITECTURAL ELEVATIONS.
3. PROVIDE 3 SETS OF TYPE V1 FIXTURES AT THIS LOCATION. MOUNT ONE SET PER SHELF LEVEL. REFER TO ARCHITECTURAL ELEVATIONS.
4. REFER TO SHEET E-701 FOR LOBBY CONTROLS.
5. FIRE ALARM EGRESS SIGNAGE SHALL BE ENERGIZED BY THE NEAREST EGRESS LIGHTING CIRCUIT. COORDINATE WITH FIRE ALARM DRAWINGS.

100% SUBMITTAL

NORTH

1/8"=1'-0" 8' 4' 0 8' 16'

AECOM

AECOM TECHNICAL SERVICES, INC.
3101 WILSON BOULEVARD
SUITE 900
ARLINGTON, VA 22201

T: 703-682-4900 F: 703.682.4901
www.aecom.com

SEAL AREA

STATE OF MARYLAND
JIEEB PEN
10-11-2012
NO. 40964
PROFESSIONAL ENGINEER

KEY PLAN

SEGMENT - B

REV	DATE	DESCRIPTION	S&R BR.	CUSTOMER	PM	SECT. HEAD

	INITIALS	DATE
DRAWN BY	LB/BF	
CHECKED BY	JR/MM	
A-E MANAGER	EW	
ENVIRONMENTAL BRANCH	JH	
SAFETY BRANCH	CS	
CM	MMD	
PM	RWP	
CUSTOMER	JWB	
ENG. BRANCH	DGL	

LEVEL-3 ELECTRICAL LIGHTING PLAN SEGMENT B

E-103b

FLIGHT PROJECTS BUILDING

NATIONAL AERONAUTICS AND SPACE ADMINISTRATION
GODDARD SPACE FLIGHT CENTER GREENBELT, MARYLAND
FACILITIES MANAGEMENT DIVISION

DATE ISSUED	CoF CODE OR WR#	AECOM PROJECT NO.	SCALE
10/12/2012	12GXAZ	60187636	1/8" = 1'-0"

FILE DATE: 10/11/2012 2:14:29 PM

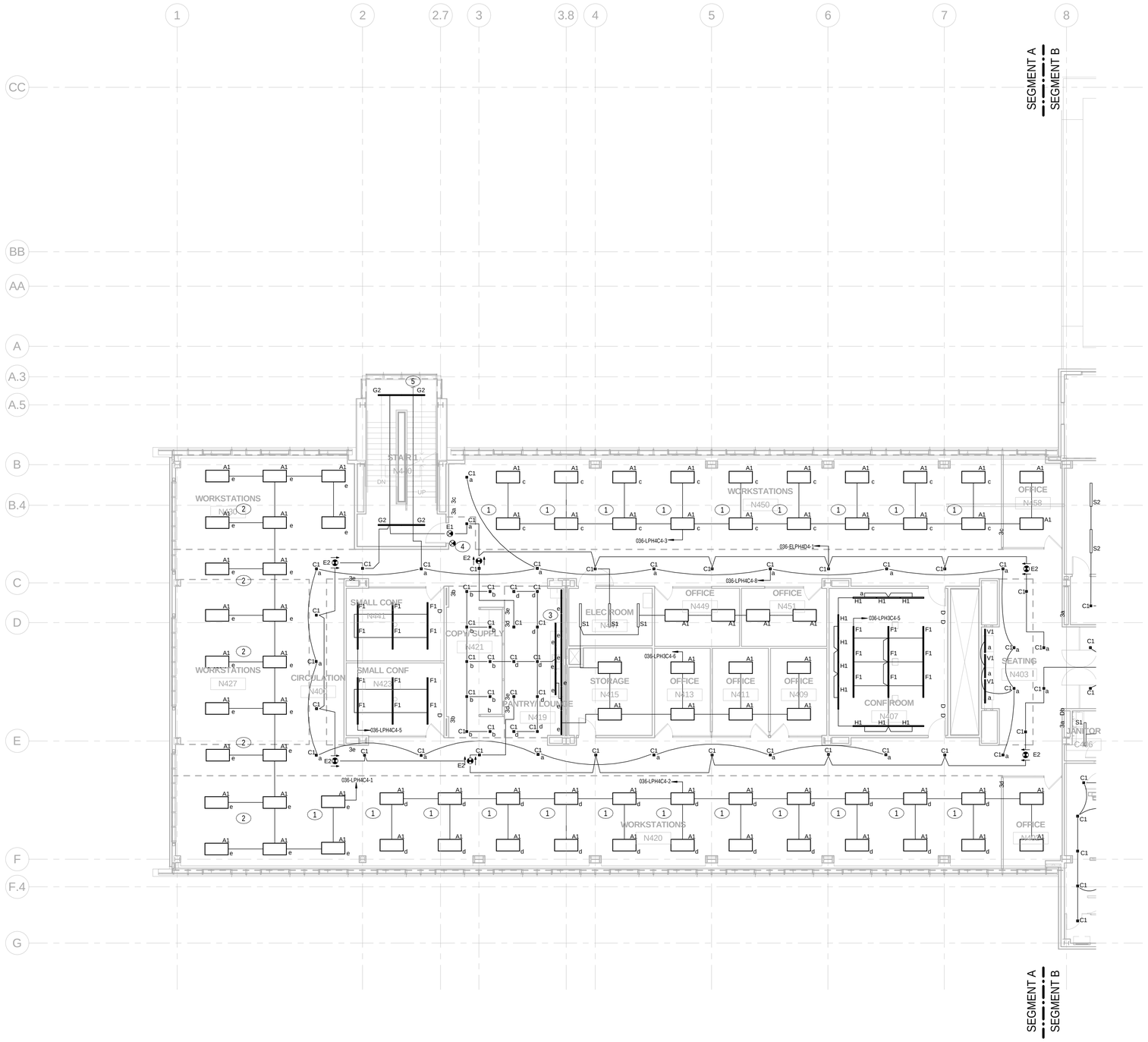

GENERAL NOTES:

1. OCCUPANCY SENSORS SHALL CONTROL ALL LIGHT FIXTURES WITHIN THE ROOM INCLUDING UNDERCOUNTER LIGHTS, UNLESS NOTED OTHERWISE.
2. ROOM WALL SWITCHES SHALL CONTROL ALL LIGHT FIXTURES WITHIN THE ROOM, INCLUDING UNDER CABINET LIGHTS.
3. WHERE MULTIPLE OCCUPANCY SENSORS ARE LOCATED WITHIN A SINGLE ROOM, LIGHT FIXTURES SHALL REMAIN "ON" UPON ACTIVATION OF EITHER SENSOR.
4. LIGHTING FIXTURE CIRCUITS SHALL "NOT BE DAISY CHAINED".

KEY NOTES:

1. OCCUPANCY SENSOR SHALL CONTROL THE TWO ADJACENT FIXTURES. REFER TO OPEN OFFICE LIGHTING CONTROL DETAIL.
2. OCCUPANCY SENSOR SHALL CONTROL THE FOUR ADJACENT FIXTURES.
3. MOUNT ONE SET OF TYPE V1 FIXTURES ABOVE CABINETS AND ONE SET UNDER CABINETS. REFER TO ARCHITECTURAL ELEVATIONS.
4. FIRE ALARM EGRESS SIGNAGE SHALL BE ENERGIZED BY THE NEAREST EGRESS LIGHTING CIRCUIT. COORDINATE WITH FIRE ALARM DRAWINGS.
5. EXTEND UPTO NEXT LEVEL.

100% SUBMITTAL

NORTH

1/8"=1'-0" 8' 4' 0 8' 16'

AECOM

AECOM TECHNICAL SERVICES, INC.
3101 WILSON BOULEVARD
SUITE 900
ARLINGTON, VA 22201

T: 703-682-4900 F: 703.682.4901
www.aecom.com

SEAL AREA

STATE OF MARYLAND
WEEB, RYAN
No. 40964
PROFESSIONAL ENGINEER
10-12-2012

KEY PLAN

SEGMENT - A

REV	DATE	DESCRIPTION	S&R BR.	CUSTOMER	PM	SECT. HEAD

	INITIALS	DATE
DRAWN BY	LB/BF	
CHECKED BY	JR/MM	
A-E MANAGER	EW	
ENVIRONMENTAL BRANCH	JH	
SAFETY BRANCH	CS	
CM	MMD	
PM	RWP	
CUSTOMER	JWB	
ENG. BRANCH	DGL	

LEVEL-4 ELECTRICAL LIGHTING PLAN SEGMENT A

E-104a

FLIGHT PROJECTS BUILDING

NATIONAL AERONAUTICS AND SPACE ADMINISTRATION
GODDARD SPACE FLIGHT CENTER GREENBELT, MARYLAND
FACILITIES MANAGEMENT DIVISION

DATE ISSUED	CoF CODE OR WR#	AECOM PROJECT NO.	SCALE
10/12/2012	12GXAZ	60187636	1/8" = 1'-0"

FILE DATE: 10/11/2012 2:14:32 PM

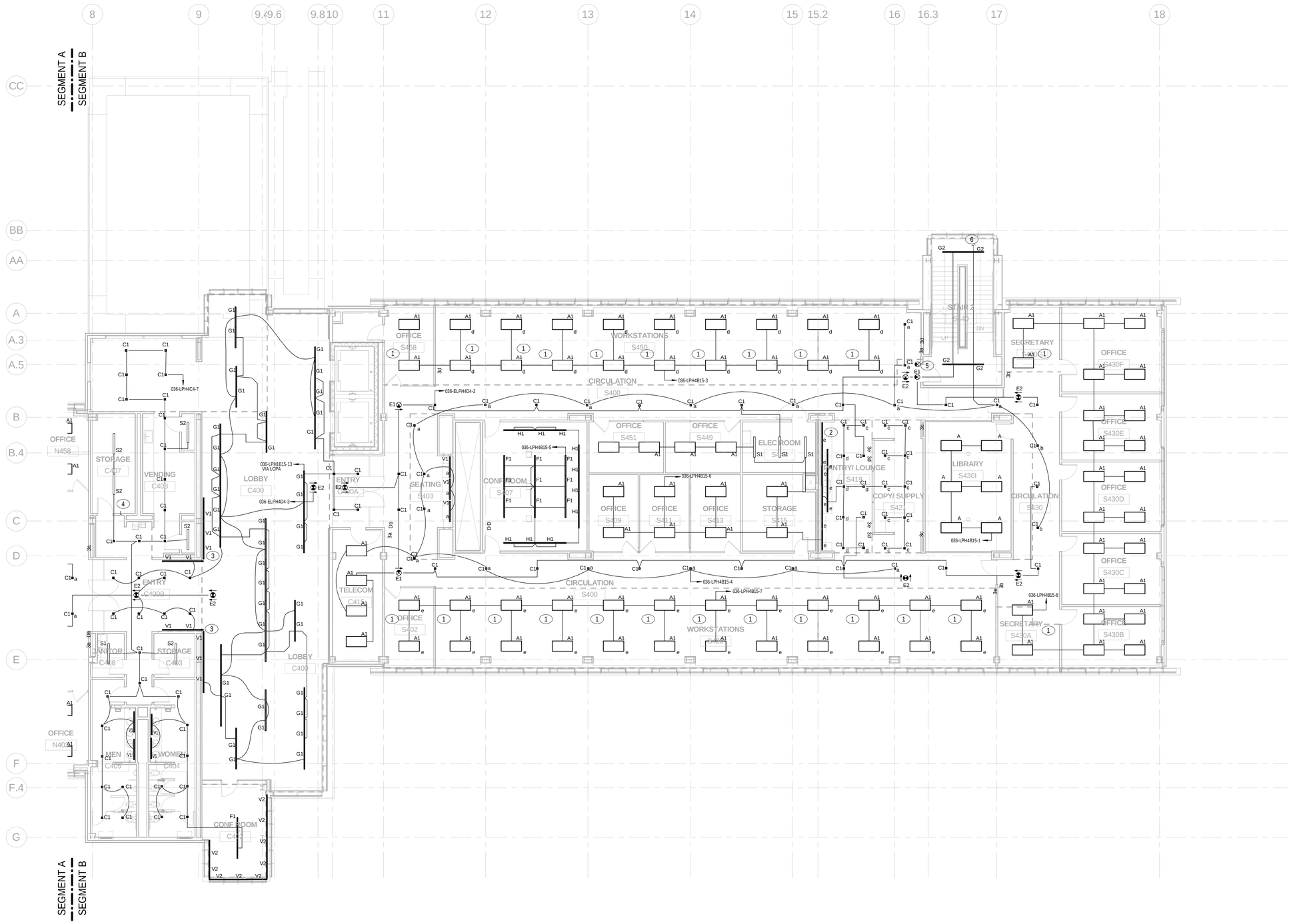

GENERAL NOTES:

1. OCCUPANCY SENSORS SHALL CONTROL ALL LIGHT FIXTURES WITHIN THE ROOM INCLUDING UNDERCOUNTER LIGHTS, UNLESS NOTED OTHERWISE.
2. ROOM WALL SWITCHES SHALL CONTROL ALL LIGHT FIXTURES WITHIN THE ROOM, INCLUDING UNDER CABINET LIGHTS.
3. WHERE MULTIPLE OCCUPANCY SENSORS ARE LOCATED WITHIN A SINGLE ROOM, LIGHT FIXTURES SHALL REMAIN "ON" UPON ACTIVATION OF EITHER SENSOR.
4. LIGHTING FIXTURE CIRCUITS SHALL "NOT BE DAISY CHAINED".

KEY NOTES:

1. OCCUPANCY SENSOR SHALL CONTROL THE TWO ADJACENT FIXTURES. REFER TO OPEN OFFICE LIGHTING CONTROL DETAIL.
2. MOUNT ONE SET OF TYPE V1 FIXTURES ABOVE CABINETS AND ONE SET UNDER CABINETS. REFER TO ARCHITECTURAL ELEVATIONS.
3. PROVIDE 3 SETS OF TYPE V1 FIXTURES AT THIS LOCATION. MOUNT ONE SET PER SHELF LEVEL. REFER TO ARCHITECTURAL ELEVATIONS.
4. REFER TO SHEET E-701 FOR LOBBY CONTROLS.
5. FIRE ALARM EGRESS SIGNAGE SHALL BE ENERGIZED BY THE NEAREST EGRESS LIGHTING CIRCUIT. COORDINATE WITH FIRE ALARM DRAWINGS.
6. EXTEND UPTO THE NEXT LEVEL.

100% SUBMITTAL

NORTH

1/8"=1'-0" 8' 4' 0 8' 16'

AECOM
AECOM TECHNICAL SERVICES, INC.
3101 WILSON BOULEVARD
SUITE 900
ARLINGTON, VA 22201
T: 703-682-4900 F: 703.682.4901
www.aecom.com

SEAL AREA

STATE OF MARYLAND
JIEEB BAN
10-11-2012
No. 40968
PROFESSIONAL ENGINEER

KEY PLAN

SEGMENT - B

REV	DATE	DESCRIPTION	S&R BR.	CUSTOMER	PM	SECT. HEAD

	INITIALS	DATE
DRAWN BY	LB/BF	
CHECKED BY	JR/MM	
A-E MANAGER	EW	
ENVIRONMENTAL BRANCH	JH	
SAFETY BRANCH	CS	
CM	MMD	
PM	RWP	
CUSTOMER	JWB	
ENG. BRANCH	DGL	

LEVEL-4 ELECTRICAL LIGHTING PLAN SEGMENT B

E-104b

FLIGHT PROJECTS BUILDING

NATIONAL AERONAUTICS AND SPACE ADMINISTRATION
GODDARD SPACE FLIGHT CENTER GREENBELT, MARYLAND
FACILITIES MANAGEMENT DIVISION

DATE ISSUED	CoF CODE OR WR#	AECOM PROJECT NO.	SCALE
10/12/2012	12GXAZ	60187636	1/8" = 1'-0"

FILE DATE: 10/11/2012 2:14:36 PM

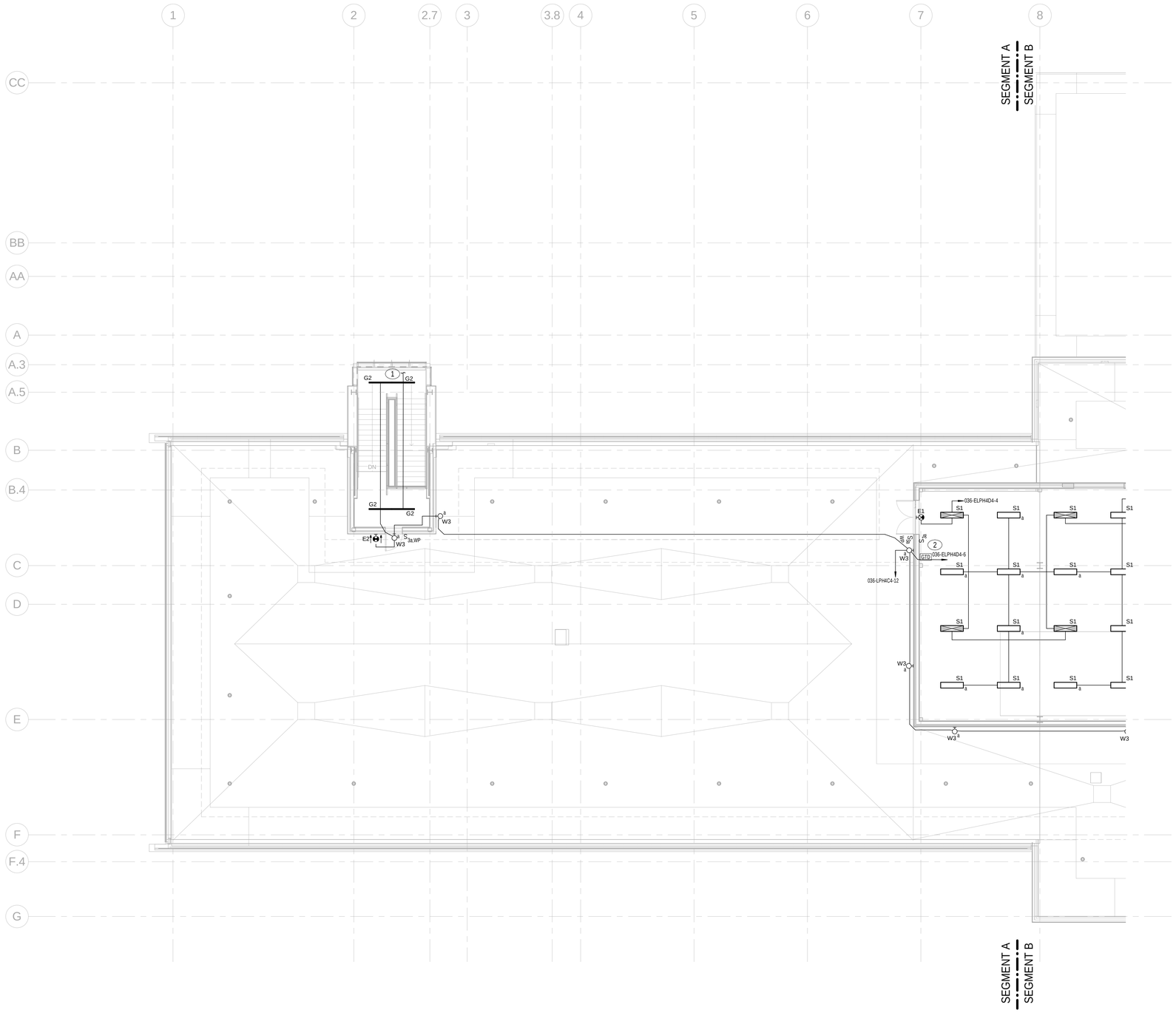

GENERAL NOTES:

1. OCCUPANCY SENSORS SHALL CONTROL ALL LIGHT FIXTURES WITHIN THE ROOM INCLUDING UNDERCOUNTER LIGHTS, UNLESS NOTED OTHERWISE.
2. ROOM WALL SWITCHES SHALL CONTROL ALL LIGHT FIXTURES WITHIN THE ROOM, INCLUDING UNDER CABINET LIGHTS.
3. WHERE MULTIPLE OCCUPANCY SENSORS ARE LOCATED WITHIN A SINGLE ROOM, LIGHT FIXTURES SHALL REMAIN "ON" UPON ACTIVATION OF EITHER SENSOR.
4. LIGHTING FIXTURE CIRCUITS SHALL "NOT BE DAISY CHAINED".

KEY NOTES:

1. CONNECT TO NORMAL LIGHTING CIRCUIT ON LEVEL BELOW. SEE SHEET E-104a.
2. PROVIDE FIXTURE WITH FACTORY INSTALLED GENERATOR TRANSFER DEVICE.
BASIS OF DESIGN: PHIILIPS, BODINE GTD.

100% SUBMITTAL

NORTH

1/8"=1'-0" 8' 4' 0 8' 16'

AECOM
AECOM TECHNICAL SERVICES, INC.
3101 WILSON BOULEVARD
SUITE 900
ARLINGTON, VA 22201
T: 703-682-4900 F: 703.682.4901
www.aecom.com

SEAL AREA

STATE OF MARYLAND
JEEB-PIN
10-12-2012
No. 40964
PROFESSIONAL ENGINEER

KEY PLAN

SEGMENT - A

REV	DATE	DESCRIPTION	S&R BR.	CUSTOMER	PM	SECT. HEAD

	INITIALS	DATE
DRAWN BY	LB/BF	
CHECKED BY	JR/MM	
A-E MANAGER	EW	
ENVIRONMENTAL BRANCH	JH	
SAFETY BRANCH	CS	
CM	MMD	
PM	RWP	
CUSTOMER	JWB	
ENG. BRANCH	DGL	

PENTHOUSE - ELECTRICAL LIGHTING PLAN SEGMENT A

E-105a

FLIGHT PROJECTS BUILDING

NATIONAL AERONAUTICS AND SPACE ADMINISTRATION

GODDARD SPACE FLIGHT CENTER GREENBELT, MARYLAND
FACILITIES MANAGEMENT DIVISION

DATE ISSUED	CoF CODE OR WR#	AECOM PROJECT NO.	SCALE
10/12/2012	12GXAZ	60187636	1/8" = 1'-0"

FILE DATE: 10/11/2012 2:14:38 PM

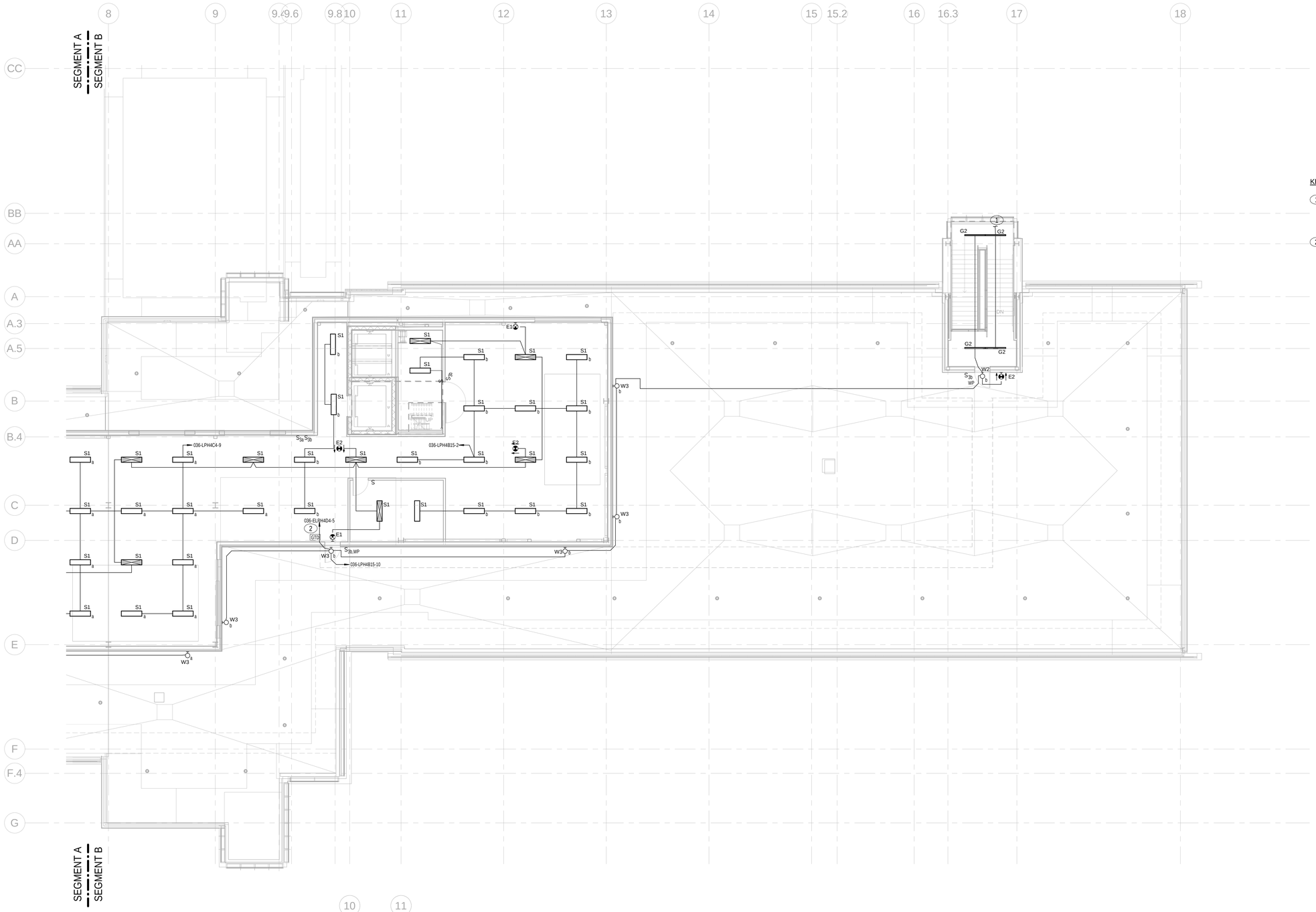

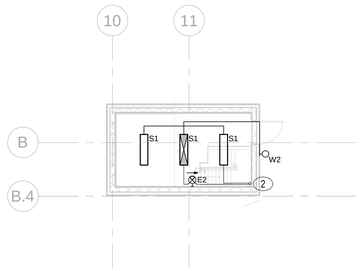

2 ELEVATOR MACHINE ROOM
1/8" = 1'-0"

GENERAL NOTES:

1. OCCUPANCY SENSORS SHALL CONTROL ALL LIGHT FIXTURES WITHIN THE ROOM INCLUDING UNDERCOUNTER LIGHTS, UNLESS NOTED OTHERWISE.
2. ROOM WALL SWITCHES SHALL CONTROL ALL LIGHT FIXTURES WITHIN THE ROOM, INCLUDING UNDER CABINET LIGHTS.
3. WHERE MULTIPLE OCCUPANCY SENSORS ARE LOCATED WITHIN A SINGLE ROOM, LIGHT FIXTURES SHALL REMAIN "ON" UPON ACTIVATION OF EITHER SENSOR.
4. LIGHTING FIXTURE CIRCUITS SHALL "NOT BE DAISY CHAINED".

KEY NOTES:

1. CONNECT TO NORMAL LIGHTING CIRCUIT ON LEVEL BELOW. FIXTURES TO BE CONTROLLED BY SWITCH LOCATED ON THE LOWER LEVEL. SEE SHEET E-104b.
2. PROVIDE FIXTURE WITH FACTORY INSTALLED GENERATOR TRANSFER DEVICE.
BASIS OF DESIGN: PHIILIPS, BODINE GTD.

100% SUBMITTAL

NORTH

1/8"=1'-0" 8' 4' 0 8' 16'

AECOM
AECOM TECHNICAL SERVICES, INC.
3101 WILSON BOULEVARD
SUITE 900
ARLINGTON, VA 22201
T: 703-682-4900 F: 703.682.4901
www.aecom.com

SEAL AREA
STATE OF MARYLAND
ELECTRICAL ENGINEER
No. 40061
PROFESSIONAL ENGINEER
10-11-2012

KEY PLAN
SEGMENT - B

REV	DATE	DESCRIPTION	S&R BR.	CUSTOMER	PM	SECT. HEAD

	INITIALS	DATE
DRAWN BY	LB/BF	
CHECKED BY	JR/MM	
A-E MANAGER	EW	
ENVIRONMENTAL BRANCH	JH	
SAFETY BRANCH	CS	
CM	MMD	
PM	RWP	
CUSTOMER	JWB	
ENG. BRANCH	DGL	

PENTHOUSE - ELECTRICAL LIGHTING PLAN SEGMENT B

E-105b

FLIGHT PROJECTS BUILDING

NATIONAL AERONAUTICS AND SPACE ADMINISTRATION
GODDARD SPACE FLIGHT CENTER GREENBELT, MARYLAND
FACILITIES MANAGEMENT DIVISION

DATE ISSUED	CoF CODE OR WR#	AECOM PROJECT NO.	SCALE
10/12/2012	12GXAZ	60187636	1/8" = 1'-0"

FILE DATE: 10/11/2012 2:14:40 PM

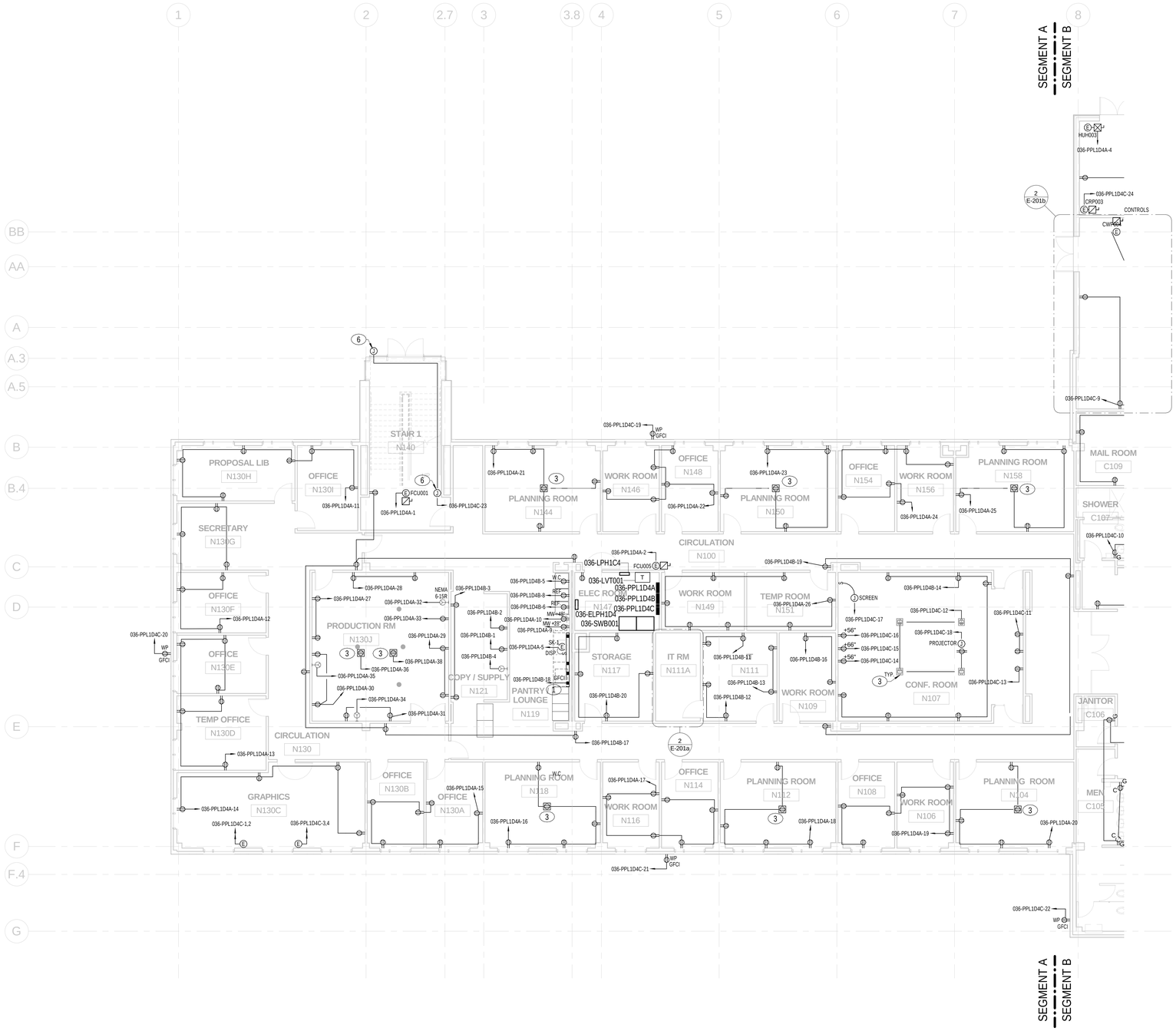

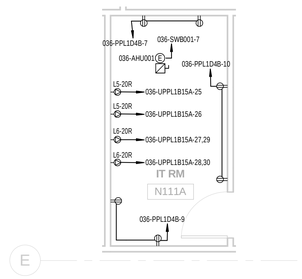

2 ENLARGED SERVER ROOM N111A

1/4" = 1'-0"

GENERAL NOTES:

1. CONDUITS SHALL NOT BE EMBEDDED WITHIN THE CONCRETE FLOOR SLAB, BUT RUN WITHIN THE CEILING SPACE ABOVE THE FLOOR BEING SERVED.
2. CONDUITS SHALL NOT RUN HORIZONTALLY WITHIN WALLS. ALL CONDUITS SHALL BE VERTICALLY RUN FROM THE CEILING TO EACH DEVICE.

KEY NOTES:

1. PLUGMOLD SHALL BE CONCEALED WITHIN THE NICHE ABOVE THE COUNTER TOP. REFER TO ARCHITECTURAL ELEVATIONS AND SECTIONS.
2. PROVIDE RECESSED RECEPTACLE OUTLET WITH COVER, TAYMAC 71202 OR EQUAL.
3. PROVIDE 1" CONDUIT FROM FLOOR BOX TO ABOVE CEILING SPACE FOR DATA CABLING. FLOOR BOX SHALL BE LEGRAND EFB8 OR EQUAL.
4. 3#4+1#10,1-1/4"C
5. NOT USED.
6. PROVIDE POWER FOR DOOR CONTROLS.

100% SUBMITTAL

NORTH

1/8"=1'-0" 8' 4' 0 8' 16'

AECOM

AECOM TECHNICAL SERVICES, INC.
3101 WILSON BOULEVARD
SUITE 900
ARLINGTON, VA 22201

T: 703-682-4900 F: 703.682.4901
www.aecom.com

SEAL AREA

STATE OF MARYLAND
JEEB RAY
No. 40961
PROFESSIONAL ENGINEER
10-11-2012

KEY PLAN

SEGMENT - A

REV	DATE	DESCRIPTION	S&R BR.	CUSTOMER	PM	SECT. HEAD

	INITIALS	DATE
DRAWN BY	LB/BF	
CHECKED BY	JR/MM	
A-E MANAGER	EW	
ENVIRONMENTAL BRANCH	JH	
SAFETY BRANCH	CS	
CM	MMD	
PM	RWP	
CUSTOMER	JWB	
ENG. BRANCH	DGL	

LEVEL-1 ELECTRICAL POWER PLAN SEGMENT A

E-201a

FLIGHT PROJECTS BUILDING

NATIONAL AERONAUTICS AND SPACE ADMINISTRATION

GODDARD SPACE FLIGHT CENTER GREENBELT, MARYLAND
FACILITIES MANAGEMENT DIVISION

DATE ISSUED	CoF CODE OR WR#	AECOM PROJECT NO.	SCALE
10/12/2012	12GXAZ	60187636	As indicated

FILE DATE: 10/11/2012 2:14:43 PM

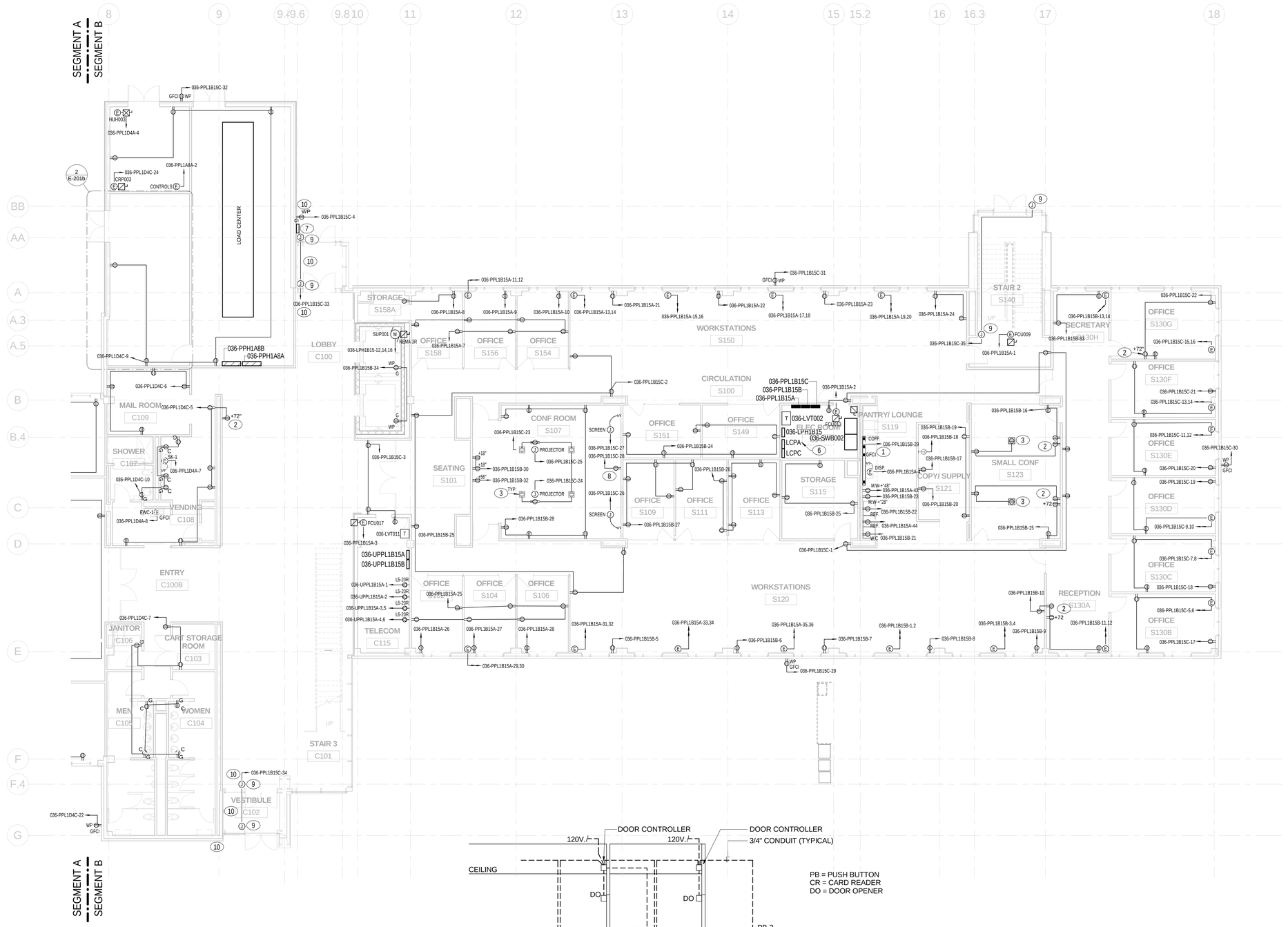

GENERAL NOTES:

1. CONDUITS SHALL NOT BE EMBEDDED WITHIN THE CONCRETE FLOOR SLAB, BUT RUN WITHIN THE CEILING SPACE ABOVE THE FLOOR BEING SERVED.
2. CONDUITS SHALL NOT RUN HORIZONTALLY WITHIN WALLS. ALL CONDUITS SHALL BE VERTICALLY RUN FROM THE CEILING TO EACH DEVICE.

1. PLUGMOLD SHALL BE CONCEALED WITHIN THE NICHE ABOVE THE COUNTER TOP. REFER TO ARCHITECTURAL ELEVATIONS AND SECTIONS.
2. PROVIDE RECESSED RECEPTACLE OUTLET WITH COVER, TAYMAC 71202 OR EQUAL.
3. PROVIDE 1" CONDUIT FROM FLOOR BOX TO ABOVE CEILING SPACE FOR DATA CABLING. FLOOR BOX SHALL BE LEGRAND EFB8 OR EQUAL.
4. 3#4+1#10,1-1/4"C
5. 3#8+1#10,3/4"C
6. PROVIDE 16-CIRCUIT RELAY LIGHTING CONTROL PANEL, LEVITON EZ-MAX R24BD-L16 OR EQUAL.
7. MANUAL TRANSFER SWITCH AND PORTABLE GENERATOR CONNECTION POINT.
8. PROVIDE (2) 20A, 120V DUPLEX OUTLETS FOR NISN VVA EQUIPMENT. MOUNT AT 52" AND 70.5" AFF TO CENTER. COORDINATE FINAL LOCATION WITH ARCHITECTURE DRAWINGS AND ELEVATIONS.
9. PROVIDE POWER FOR DOOR CONTROLS.
10. DOOR HOLD OPENER PUSH BUTTON J-BOX LOCATON. MOUNT +42" AFF. PROVIDE 3/4" C. FROM DOOR PUSH BUTTON TO AUTOMATIC DOOR OPENER/CLOSER. PUSH BUTTON LOCATED IN VESTIBULE SHALL CONTROL BOTH DOORS. REFER TO ARCHITECTURAL PLANS FOR EXACT LOCATION.

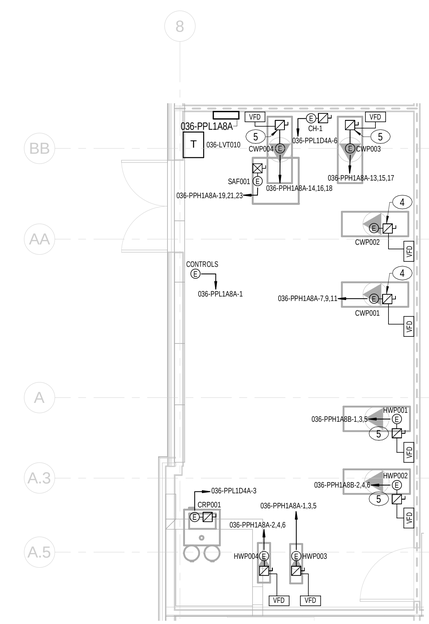

2 ENLARGED PUMP ROOM

1/4" = 1'-0"

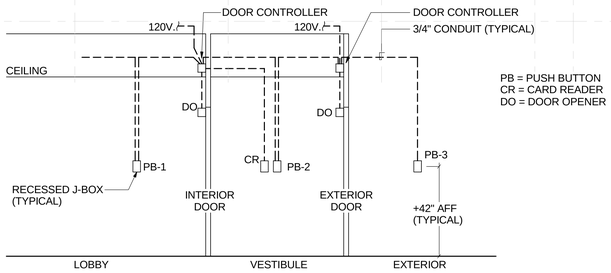

PB = PUSH BUTTON
CR = CARD READER
DO = DOOR OPENER

NOTES:

1. PROVIDE ALL NECESSARY COMPONENTS AND COORDINATE AS REQUIRED BY AUTOMATIC DOOR SYSTEM MANUFACTURER.
2. DOOR CONTROLLER SHALL BE COMPATIBLE WITH BUILDING SECURITY CONTROL SYSTEM.
3. NORMAL OPERATION: ALL PUSH BUTTONS SHALL OPEN BOTH SETS OF DOORS. AFTER HOURS OPERATION:
   PB-1 SHALL OPEN BOTH SETS OF DOORS.
   PB-2 & PB-3 SHALL ONLY OPEN EXTERIOR DOORS.
   PB-2 SHALL OPEN INTERIOR DOORS ONLY WHEN CARD READER ACCESS HAS BEEN GRANTED.

3 TYPICAL DOOR ACTUATOR & CONDUIT ROUGH-IN DIAGRAM

NONE

100% SUBMITTAL

NORTH

1/8"=1'-0" 8' 4' 0 8' 16'

AECOM
AECOM TECHNICAL SERVICES, INC.
3101 WILSON BOULEVARD
SUITE 900
ARLINGTON, VA 22201
T: 703-682-4900 F: 703.682.4901
www.aecom.com

SEAL AREA

STATE OF MARYLAND
JEEB BIN
No. 40064
PROFESSIONAL ENGINEER

KEY PLAN

SEGMENT - B

REV	DATE	DESCRIPTION	S&R BR.	CUSTOMER	PM	SECT. HEAD

	INITIALS	DATE
DRAWN BY	LB/BF	
CHECKED BY	JR/MM	
A-E MANAGER	EW	
ENVIRONMENTAL BRANCH	JH	
SAFETY BRANCH	CS	
CM	MMD	
PM	RWP	
CUSTOMER	JWB	
ENG. BRANCH	DGL	

LEVEL-1 ELECTRICAL POWER PLAN SEGMENT B

E-201b

FLIGHT PROJECTS BUILDING

NATIONAL AERONAUTICS AND SPACE ADMINISTRATION
GODDARD SPACE FLIGHT CENTER GREENBELT, MARYLAND
FACILITIES MANAGEMENT DIVISION

DATE ISSUED	CoF CODE OR WR#	AECOM PROJECT NO.	SCALE
10/12/2012	12GXAZ	60187636	As indicated

FILE DATE: 10/17/2012 11:03:24 AM

GENERAL NOTES:

1. CONDUITS SHALL NOT BE EMBEDDED WITHIN THE CONCRETE FLOOR SLAB, BUT RUN WITHIN THE CEILING SPACE ABOVE THE FLOOR BEING SERVED.
2. CONDUITS SHALL NOT RUN HORIZONTALLY WITHIN WALLS. ALL CONDUITS SHALL BE VERTICALLY RUN FROM THE CEILING TO EACH DEVICE.

KEY NOTES:

1. PLUGMOLD SHALL BE CONCEALED WITHIN THE NICHE ABOVE THE COUNTER TOP. REFER TO ARCHITECTURAL ELEVATIONS AND SECTIONS.
2. PROVIDE RECESSED RECEPTACLE OUTLET WITH COVER, TAYMAC 71202 OR EQUAL.
3. PROVIDE 1" CONDUIT FROM POKE-THRU TYPE FLOOR BOX TO ABOVE CEILING SPACE FOR DATA CABLING. POKE-THRU FLOOR BOX SHALL BE LEGRAND 8ATCPB2 OR EQUAL.

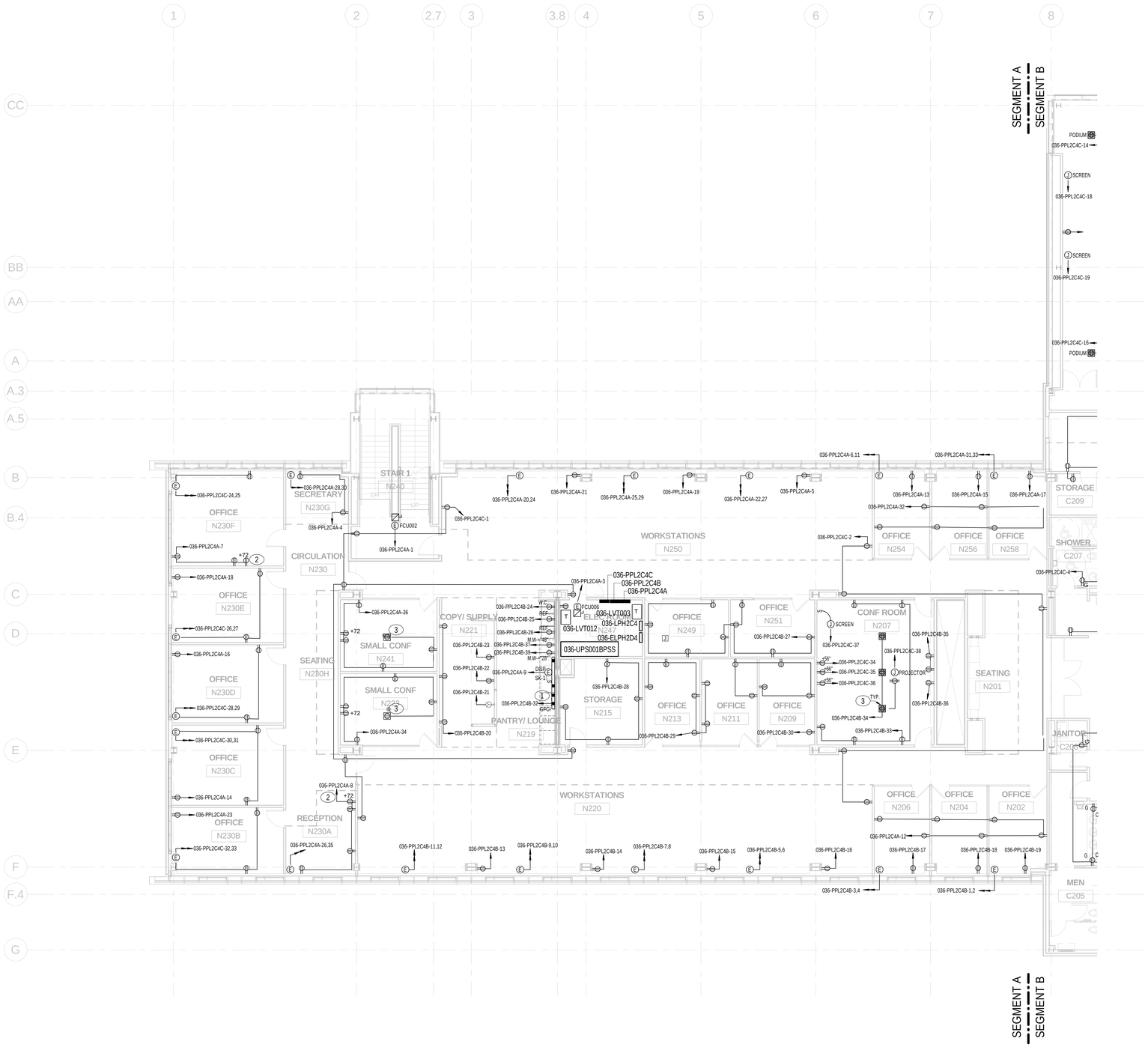

100% SUBMITTAL

AECOM

AECOM TECHNICAL SERVICES, INC.
3101 WILSON BOULEVARD
SUITE 900
ARLINGTON, VA 22201

T: 703-682-4900 F: 703.682.4901
www.aecom.com

SEAL AREA

STATE OF MARYLAND
JEEB RAY
No. 40968
PROFESSIONAL ENGINEER
10-11-2012

KEY PLAN

SEGMENT - A

REV	DATE	DESCRIPTION	S&R BR.	CUSTOMER	PM	SECT. HEAD

	INITIALS	DATE
DRAWN BY	LB/BF	
CHECKED BY	JR/MM	
A-E MANAGER	EW	
ENVIRONMENTAL BRANCH	JH	
SAFETY BRANCH	CS	
CM	MMD	
PM	RWP	
CUSTOMER	JWB	
ENG. BRANCH	DGL	

LEVEL-2 ELECTRICAL POWER PLAN SEGMENT A

E-202a

FLIGHT PROJECTS BUILDING

NATIONAL AERONAUTICS AND SPACE ADMINISTRATION

GODDARD SPACE FLIGHT CENTER GREENBELT, MARYLAND
FACILITIES MANAGEMENT DIVISION

DATE ISSUED	CoF CODE OR WR#	AECOM PROJECT NO.	SCALE
10/12/2012	12GXAZ	60187636	1/8" = 1'-0"

FILE DATE: 10/11/2012 2:14:49 PM

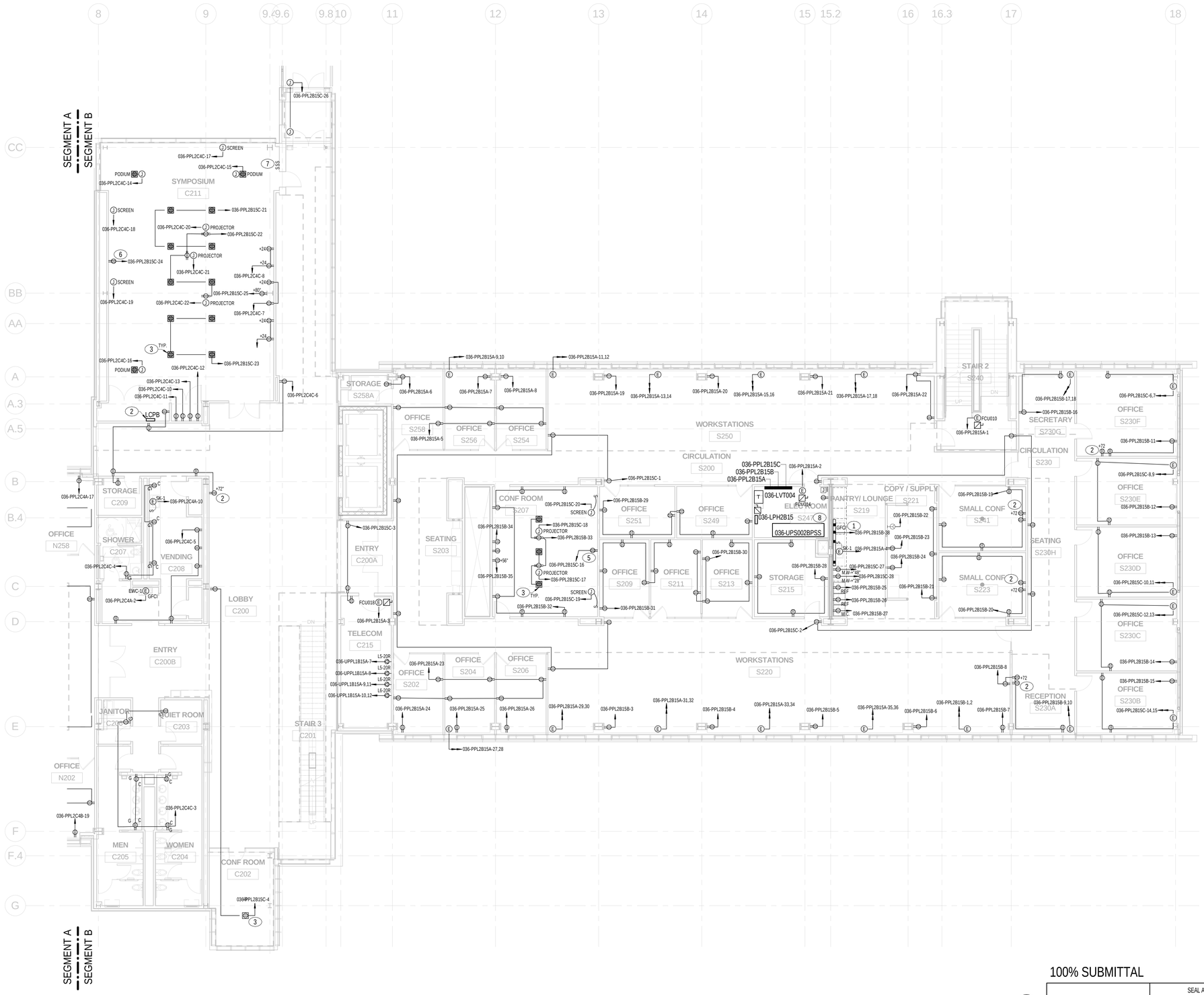

GENERAL NOTES:

1. CONDUITS SHALL NOT BE EMBEDDED WITHIN THE CONCRETE FLOOR SLAB, BUT RUN WITHIN THE CEILING SPACE ABOVE THE FLOOR BEING SERVED.
2. CONDUITS SHALL NOT RUN HORIZONTALLY WITHIN WALLS. ALL CONDUITS SHALL BE VERTICALLY RUN FROM THE CEILING TO EACH DEVICE.

KEY NOTES:

1. PLUGMOLD SHALL BE CONCEALED WITHIN THE NICHE ABOVE THE COUNTER TOP. REFER TO ARCHITECTURAL ELEVATIONS AND SECTIONS.
2. PROVIDE RECESSED RECEPTACLE OUTLET WITH COVER, TAYMAC 71202 OR EQUAL.
3. PROVIDE 1" CONDUIT FROM POKE-THRU TYPE FLOOR BOX TO ABOVE CEILING SPACE FOR DATA CABLING. POKE-THRU FLOOR BOX SHALL BE LEGRAND 8ATCPB2 OR EQUAL.
4. PROVIDE DIMMING CONTROL PANEL LCPB. REFER TO SYMPOSIUM LIGHTING CONTROL DIAGRAM .
5. PROVIDE (2) 20A, 120V DUPLEX OUTLETS FOR NISN VVA EQUIPMENT. MOUNT AT 52" AND 70.5" AFF TO CENTER. COORDINATE FINAL LOCATION WITH ARCHITECTURE DRAWINGS AND ELEVATIONS.
6. PROVIDE (2) 20A, 120V DUPLEX OUTLETS FOR NISN VVA EQUIPMENT. MOUNT AT 66" AND 76" AFF TO CENTER. COORDINATE FINAL LOCATION WITH ARCHITECTURE DRAWINGS AND ELEVATIONS.
7. PROVIDE INDIVIDUAL SWITCHING CONTROLS FOR EACH PROJECTION SCREEN. COORDINATE FINAL LOCATION WITH ARCHITECTURAL DRAWINGS.
8. UPS NOT IN CONTRACT. SHOWN HERE FOR SPACE ALLOCATION PURPOSES.

100% SUBMITTAL

AECOM
AECOM TECHNICAL SERVICES, INC.
3101 WILSON BOULEVARD
SUITE 900
ARLINGTON, VA 22201
T: 703.682.4900 F: 703.682.4901
www.aecom.com

SEAL AREA

STATE OF MARYLAND
JIEEB BAN
10-11-2012
No. 40964
PROFESSIONAL ENGINEER

KEY PLAN

SEGMENT - B

REV	DATE	DESCRIPTION	S&R BR.	CUSTOMER	PM	SECT. HEAD

	INITIALS	DATE
DRAWN BY	LB/BF	
CHECKED BY	JR/MM	
A-E MANAGER	EW	
ENVIRONMENTAL BRANCH	JH	
SAFETY BRANCH	CS	
CM	MMD	
PM	RWP	
CUSTOMER	JWB	
ENG. BRANCH	DGL	

LEVEL-2 ELECTRICAL POWER PLAN SEGMENT B

E-202b

FLIGHT PROJECTS BUILDING

NATIONAL AERONAUTICS AND SPACE ADMINISTRATION

GODDARD SPACE FLIGHT CENTER GREENBELT, MARYLAND
FACILITIES MANAGEMENT DIVISION

DATE ISSUED	CoF CODE OR WR#	AECOM PROJECT NO.	SCALE
10/12/2012	12GXAZ	60187636	1/8" = 1'-0"

FILE DATE: 10/11/2012 2:14:53 PM

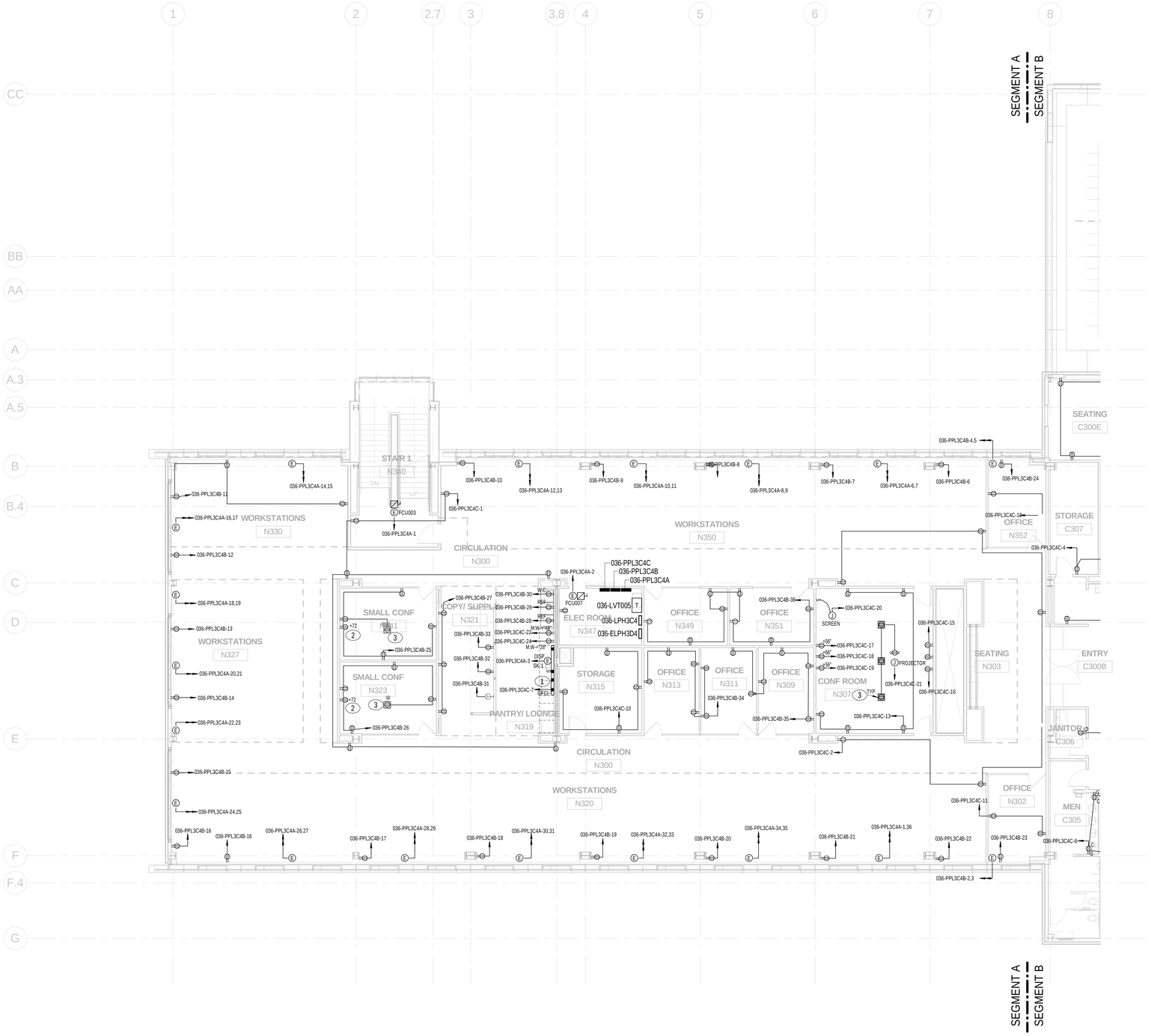

GENERAL NOTES:

1. CONDUITS SHALL NOT BE EMBEDDED WITHIN THE CONCRETE FLOOR SLAB, BUT RUN WITHIN THE CEILING SPACE ABOVE THE FLOOR BEING SERVED.
2. CONDUITS SHALL NOT RUN HORIZONTALLY WITHIN WALLS. ALL CONDUITS SHALL BE VERTICALLY RUN FROM THE CEILING TO EACH DEVICE.

KEY NOTES:

1. PLUGMOLD SHALL BE CONCEALED WITHIN THE NICHE ABOVE THE COUNTER TOP. REFER TO ARCHITECTURAL ELEVATIONS AND SECTIONS.
2. PROVIDE RECESSED RECEPTACLE OUTLET WITH COVER, TAYMAC 71202 OR EQUAL.
3. PROVIDE 1" CONDUIT FROM POKE-THRU TYPE FLOOR BOX TO ABOVE CEILING SPACE FOR DATA CABLING. POKE-THRU FLOOR BOX SHALL BE LEGRAND 8ATCPB2 OR EQUAL.

100% SUBMITTAL

1/8"=1'-0" 8' 4' 0 8' 16'

AECOM

AECOM TECHNICAL SERVICES, INC.
3101 WILSON BOULEVARD
SUITE 900
ARLINGTON, VA 22201

T: 703-682-4900 F: 703.682.4901
www.aecom.com

SEAL AREA

STATE OF MARYLAND
JIEEB BIN
No. 40968
PROFESSIONAL ENGINEER
10-11-2012

KEY PLAN

SEGMENT - A

REV	DATE	DESCRIPTION	S&R BR.	CUSTOMER	PM	SECT. HEAD

	INITIALS	DATE
DRAWN BY	LB/BF	
CHECKED BY	JR/MM	
A-E MANAGER	EW	
ENVIRONMENTAL BRANCH	JH	
SAFETY BRANCH	CS	
CM	MMD	
PM	RWP	
CUSTOMER	JWB	
ENG. BRANCH	DGL	

LEVEL-3 ELECTRICAL POWER PLAN SEGMENT A

E-203a

FLIGHT PROJECTS BUILDING

NATIONAL AERONAUTICS AND SPACE ADMINISTRATION
GODDARD SPACE FLIGHT CENTER GREENBELT, MARYLAND
FACILITIES MANAGEMENT DIVISION

DATE ISSUED	CoF CODE OR WR#	AECOM PROJECT NO.	SCALE
10/12/2012	12GXAZ	60187636	1/8" = 1'-0"

FILE DATE: 10/11/2012 2:14:56 PM

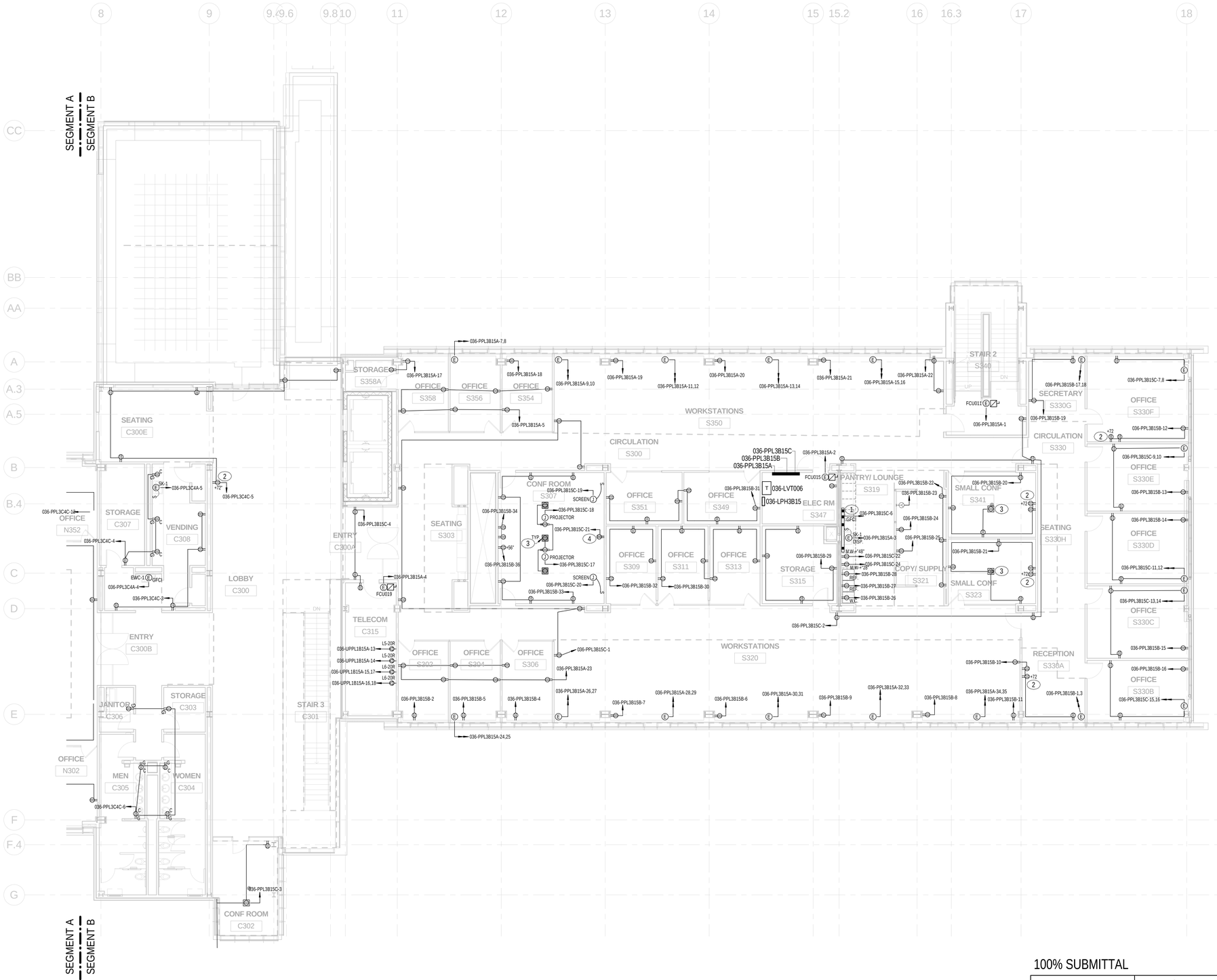

GENERAL NOTES:

1. CONDUITS SHALL NOT BE EMBEDDED WITHIN THE CONCRETE FLOOR SLAB, BUT RUN WITHIN THE CEILING SPACE ABOVE THE FLOOR BEING SERVED.
2. CONDUITS SHALL NOT RUN HORIZONTALLY WITHIN WALLS. ALL CONDUITS SHALL BE VERTICALLY RUN FROM THE CEILING TO EACH DEVICE.

KEY NOTES:

1. PLUGMOLD SHALL BE CONCEALED WITHIN THE NICHE ABOVE THE COUNTER TOP. REFER TO ARCHITECTURAL ELEVATIONS AND SECTIONS.
2. PROVIDE RECESSED RECEPTACLE OUTLET WITH COVER, TAYMAC 71202 OR EQUAL.
3. PROVIDE 1" CONDUIT FROM POKE-THRU TYPE FLOOR BOX TO ABOVE CEILING SPACE FOR DATA CABLING. POKE-THRU FLOOR BOX SHALL BE LEGRAND 8ATCPB2 OR EQUAL.
4. PROVIDE (2) 20A, 120V DUPLEX OUTLETS FOR NISN VVA EQUIPMENT. MOUNT AT 52" AND 70.5" AFF TO CENTER. COORDINATE FINAL LOCATION WITH ARCHITECTURE DRAWINGS AND ELEVATIONS.

100% SUBMITTAL

NORTH

1/8"=1'-0" 8' 4' 0 8' 16'

AECOM
AECOM TECHNICAL SERVICES, INC.
3101 WILSON BOULEVARD
SUITE 900
ARLINGTON, VA 22201
T: 703-682-4900 F: 703.682.4901
www.aecom.com

SEAL AREA

STATE OF MARYLAND
JEEB BIN
10-11-2012
NO. 40964
PROFESSIONAL ENGINEER

KEY PLAN

SEGMENT - B

REV	DATE	DESCRIPTION	S&R BR.	CUSTOMER	PM	SECT. HEAD

	INITIALS	DATE
DRAWN BY	LB/BF	
CHECKED BY	JR/MM	
A-E MANAGER	EW	
ENVIRONMENTAL BRANCH	JH	
SAFETY BRANCH	CS	
CM	MMD	
PM	RWP	
CUSTOMER	JWB	
ENG. BRANCH	DGL	

LEVEL-3 ELECTRICAL POWER PLAN SEGMENT B

E-203b

FLIGHT PROJECTS BUILDING

NATIONAL AERONAUTICS AND SPACE ADMINISTRATION
GODDARD SPACE FLIGHT CENTER GREENBELT, MARYLAND
FACILITIES MANAGEMENT DIVISION

DATE ISSUED	CoF CODE OR WR#	AECOM PROJECT NO.	SCALE
10/12/2012	12GXAZ	60187636	1/8" = 1'-0"

FILE DATE: 10/11/2012 2:15:00 PM

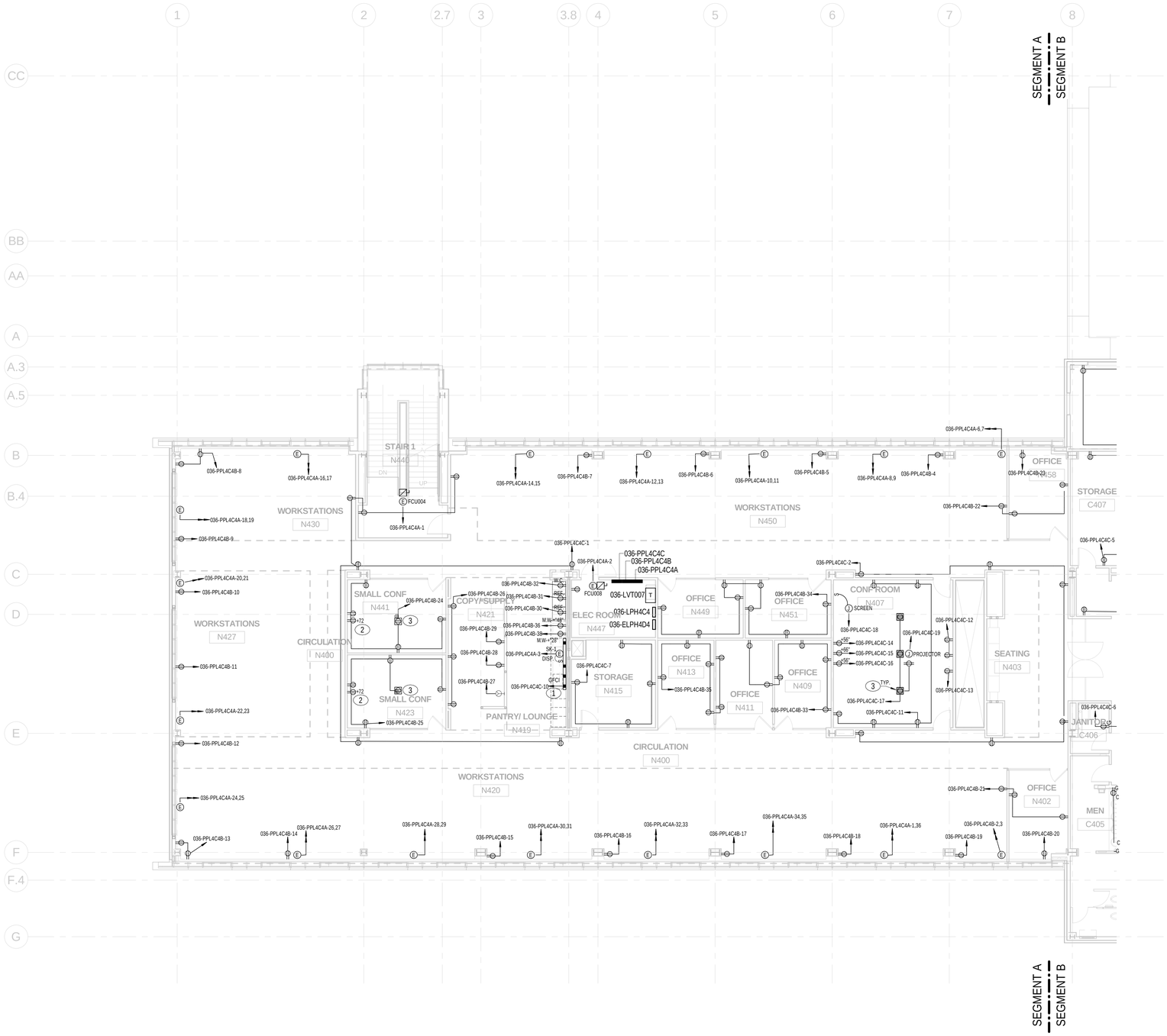

GENERAL NOTES:

1. CONDUITS SHALL NOT BE EMBEDDED WITHIN THE CONCRETE FLOOR SLAB, BUT RUN WITHIN THE CEILING SPACE ABOVE THE FLOOR BEING SERVED.
2. CONDUITS SHALL NOT RUN HORIZONTALLY WITHIN WALLS. ALL CONDUITS SHALL BE VERTICALLY RUN FROM THE CEILING TO EACH DEVICE.

KEY NOTES:

1. PLUGMOLD SHALL BE CONCEALED WITHIN THE NICHE ABOVE THE COUNTER TOP. REFER TO ARCHITECTURAL ELEVATIONS AND SECTIONS.
2. PROVIDE RECESSED RECEPTACLE OUTLET WITH COVER, TAYMAC 71202 OR EQUAL.
3. PROVIDE 1" CONDUIT FROM POKE-THRU TYPE FLOOR BOX TO ABOVE CEILING SPACE FOR DATA CABLING. POKE-THRU FLOOR BOX SHALL BE LEGRAND 8ATCPBZ OR EQUAL.

100% SUBMITTAL

NORTH

1/8"=1'-0" 8' 4' 0 8' 16'

AECOM
AECOM TECHNICAL SERVICES, INC.
3101 WILSON BOULEVARD
SUITE 900
ARLINGTON, VA 22201
T: 703-682-4900 F: 703.682.4901
www.aecom.com

SEAL AREA

STATE OF MARYLAND
JIEEB RAN
No. 40968
PROFESSIONAL ENGINEER
10-11-2012

KEY PLAN

SEGMENT - A

REV	DATE	DESCRIPTION	S&R BR.	CUSTOMER	PM	SECT. HEAD

	INITIALS	DATE
DRAWN BY	LB/BF	
CHECKED BY	JR/MM	
A-E MANAGER	EW	
ENVIRONMENTAL BRANCH	JH	
SAFETY BRANCH	CS	
CM	MMD	
PM	RWP	
CUSTOMER	JWB	
ENG. BRANCH	DGL	

LEVEL-4 ELECTRICAL POWER PLAN SEGMENT A

E-204a

FLIGHT PROJECTS BUILDING

NATIONAL AERONAUTICS AND SPACE ADMINISTRATION
GODDARD SPACE FLIGHT CENTER GREENBELT, MARYLAND
FACILITIES MANAGEMENT DIVISION

DATE ISSUED	CoF CODE OR WR#	AECOM PROJECT NO.	SCALE
10/12/2012	12GXAZ	60187636	1/8" = 1'-0"

FILE DATE: 10/11/2012 2:15:02 PM

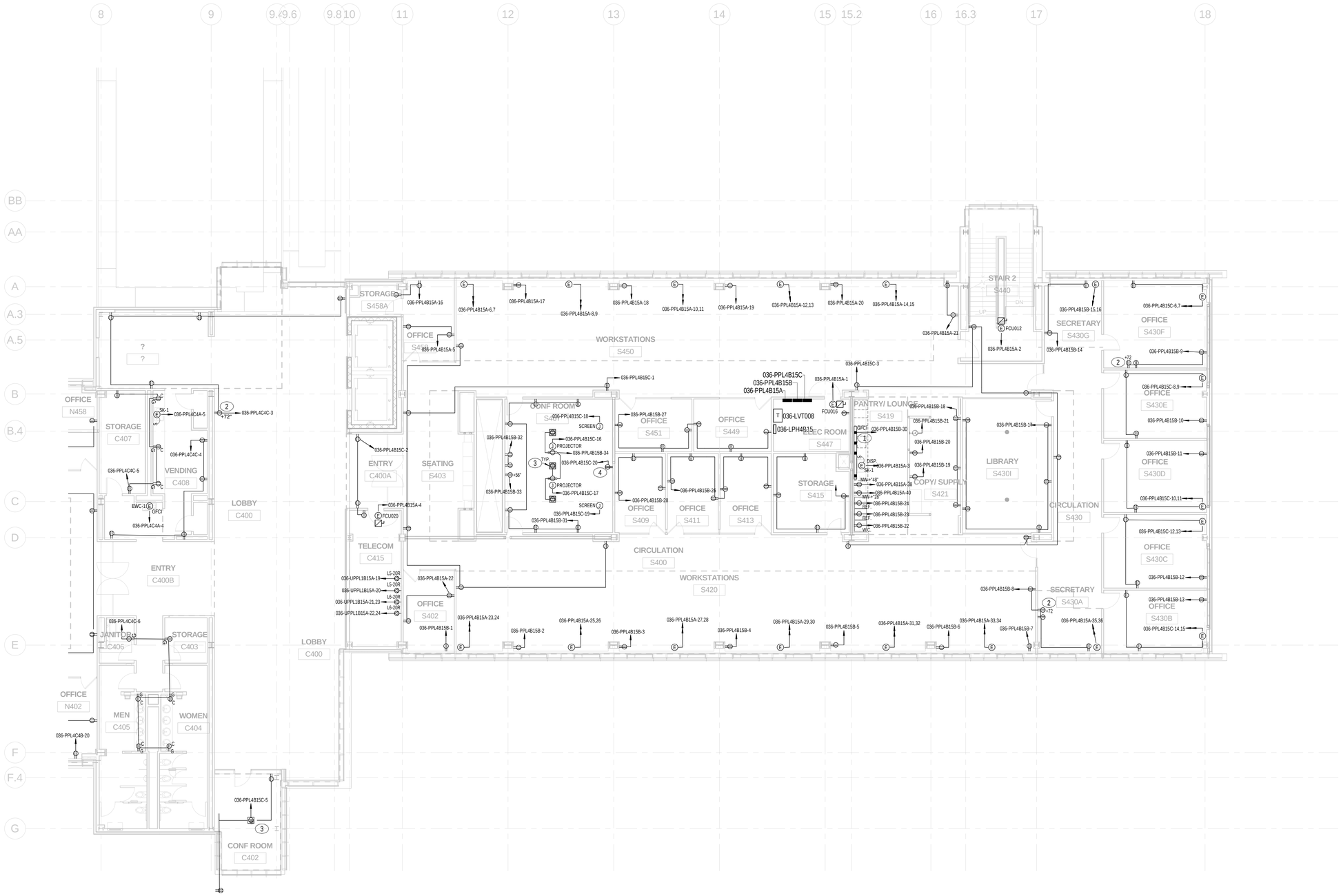

GENERAL NOTES:

1. CONDUITS SHALL NOT BE EMBEDDED WITHIN THE CONCRETE FLOOR SLAB, BUT RUN WITHIN THE CEILING SPACE ABOVE THE FLOOR BEING SERVED.
2. CONDUITS SHALL NOT RUN HORIZONTALLY WITHIN WALLS. ALL CONDUITS SHALL BE VERTICALLY RUN FROM THE CEILING TO EACH DEVICE.

KEY NOTES:

1. PLUGMOLD SHALL BE CONCEALED WITHIN THE NICHE ABOVE THE COUNTER TOP. REFER TO ARCHITECTURAL ELEVATIONS AND SECTIONS.
2. PROVIDE RECESSED RECEPTACLE OUTLET WITH COVER, TAYMAC 71202 OR EQUAL.
3. PROVIDE 1" CONDUIT FROM POKE-THRU TYPE FLOOR BOX TO ABOVE CEILING SPACE FOR DATA CABLING. POKE-THRU FLOOR BOX SHALL BE LEGRAND 8ATCPB2 OR EQUAL.
4. PROVIDE (2) 20A, 120V DUPLEX OUTLETS FOR NISN VVA EQUIPMENT. MOUNT AT 52" AND 70.5" AFF TO CENTER. COORDINATE FINAL LOCATION WITH ARCHITECTURE DRAWINGS AND ELEVATIONS.

100% SUBMITTAL

NORTH

1/8"=1'-0" 8' 4' 0 8' 16'

AECOM
AECOM TECHNICAL SERVICES, INC.
3101 WILSON BOULEVARD
SUITE 900
ARLINGTON, VA 22201
T: 703-682-4900 F: 703.682.4901
www.aecom.com

SEAL AREA

STATE OF MARYLAND
JEEB RAI
No. 40964
PROFESSIONAL ENGINEER
10-12-2012

KEY PLAN

SEGMENT - B

REV	DATE	DESCRIPTION	S&R BR.	CUSTOMER	PM	SECT. HEAD

	INITIALS	DATE
DRAWN BY	LB/BF	
CHECKED BY	JR/MM	
A-E MANAGER	EW	
ENVIRONMENTAL BRANCH	JH	
SAFETY BRANCH	CS	
CM	MMD	
PM	RWP	
CUSTOMER	JWB	
ENG. BRANCH	DGL	

LEVEL-4 ELECTRICAL POWER PLAN SEGMENT B

E-204b

FLIGHT PROJECTS BUILDING

NATIONAL AERONAUTICS AND SPACE ADMINISTRATION
GODDARD SPACE FLIGHT CENTER GREENBELT, MARYLAND
FACILITIES MANAGEMENT DIVISION

DATE ISSUED	CoF CODE OR WR#	AECOM PROJECT NO.	SCALE
10/12/2012	12GXAZ	60187636	1/8" = 1'-0"

FILE DATE: 10/11/2012 2:15:05 PM

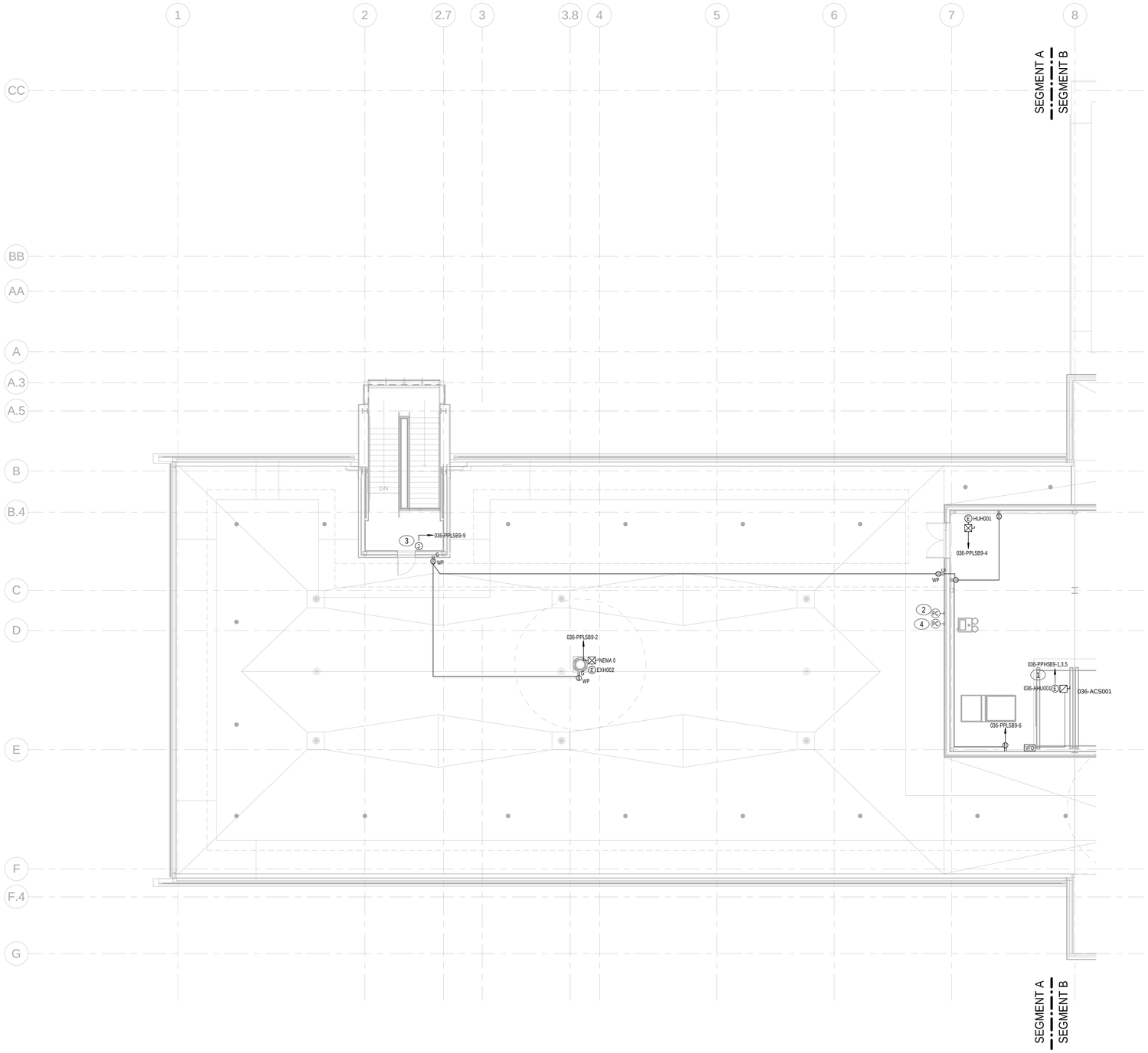

GENERAL NOTES:

1. CONDUITS SHALL NOT BE IMBEDDED WITHIN THE CONCRETE FLOOR SLAB.

KEY NOTES:

1. 4#1+1#6G, 2"C
2. PHOTOCELL SHALL CONTROLL PANEL LCPC.
3. PROVIDE POWER TO DOOR CONTROLS.
4. PHOTOCELL SHALL CONTROL PANEL " LCPA".

100% SUBMITTAL

NORTH

1/8"=1'-0" 8' 4' 0 8' 16'

AECOM

AECOM TECHNICAL SERVICES, INC.
3101 WILSON BOULEVARD
SUITE 900
ARLINGTON, VA 22201

T: 703-682-4900 F: 703.682.4901
www.aecom.com

SEAL AREA

STATE OF MARYLAND
JIEEB PAN
No. 40968
PROFESSIONAL ENGINEER
10-11-2012

KEY PLAN

SEGMENT - A

REV	DATE	DESCRIPTION	S&R BR.	CUSTOMER	PM	SECT. HEAD

	INITIALS	DATE
DRAWN BY	LB/BF	
CHECKED BY	JR/MM	
A-E MANAGER	EW	
ENVIRONMENTAL BRANCH	JH	
SAFETY BRANCH	CS	
CM	MMD	
PM	RWP	
CUSTOMER	JWB	
ENG. BRANCH	DGL	

PENTHOUSE - ELECTRICAL POWER PLAN SEGMENT A

E-205a

FLIGHT PROJECTS BUILDING

NATIONAL AERONAUTICS AND SPACE ADMINISTRATION

GODDARD SPACE FLIGHT CENTER GREENBELT, MARYLAND
FACILITIES MANAGEMENT DIVISION

DATE ISSUED	CoF CODE OR WR#	AECOM PROJECT NO.	SCALE
10/12/2012	12GXAZ	60187636	1/8" = 1'-0"

FILE DATE: 10/11/2012 2:15:07 PM

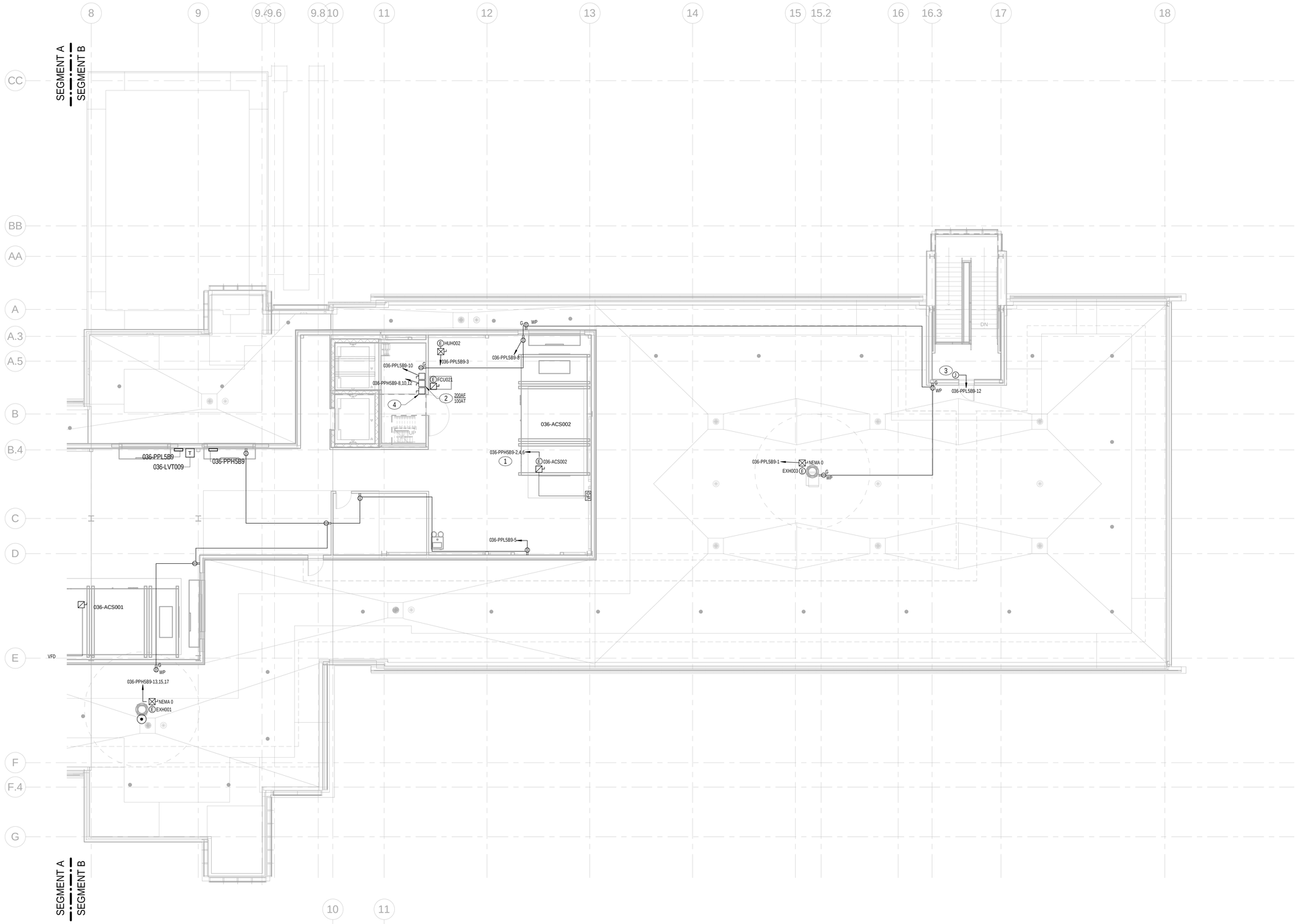

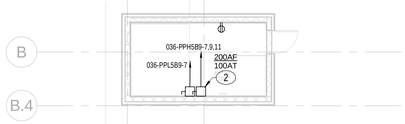

2 ELEVATOR MACHINE ROOM - ROOF
1/8" = 1'-0"

GENERAL NOTES:

1. CONDUITS SHALL NOT BE IMBEDDED WITHIN THE CONCRETE FLOOR SLAB.

KEY NOTES:

1. 4#1+1#6G, 2"C
2. 4#1+1#6G, 2"C
3. PROVIDE POWER TO DOOR CONTROLS.
4. AUXILIARY DISCONNECT SWITCH.

100% SUBMITTAL

NORTH

1/8"=1'-0" 8' 4' 0 8' 16'

AECOM

AECOM TECHNICAL SERVICES, INC.
3101 WILSON BOULEVARD
SUITE 900
ARLINGTON, VA 22201

T: 703-682-4900 F: 703.682.4901
www.aecom.com

SEAL AREA

STATE OF MARYLAND
JEEB-SIN
10-11-2012
No. 40964
PROFESSIONAL ENGINEER

KEY PLAN

SEGMENT - B

REV	DATE	DESCRIPTION	S&R BR.	CUSTOMER	PM	SECT. HEAD

	INITIALS	DATE
DRAWN BY	LB/BF	
CHECKED BY	JR/MM	
A-E MANAGER	EW	
ENVIRONMENTAL BRANCH	JH	
SAFETY BRANCH	CS	
CM	MMD	
PM	RWP	
CUSTOMER	JWB	
ENG. BRANCH	DGL	

PENTHOUSE - ELECTRICAL POWER PLAN SEGMENT B

E-205b

FLIGHT PROJECTS BUILDING

NATIONAL AERONAUTICS AND SPACE ADMINISTRATION

GODDARD SPACE FLIGHT CENTER GREENBELT, MARYLAND
FACILITIES MANAGEMENT DIVISION

DATE ISSUED	CoF CODE OR WR#	AECOM PROJECT NO.	SCALE
10/12/2012	12GXAZ	60187636	1/8" = 1'-0"

FILE DATE: 10/11/2012 2:15:08 PM

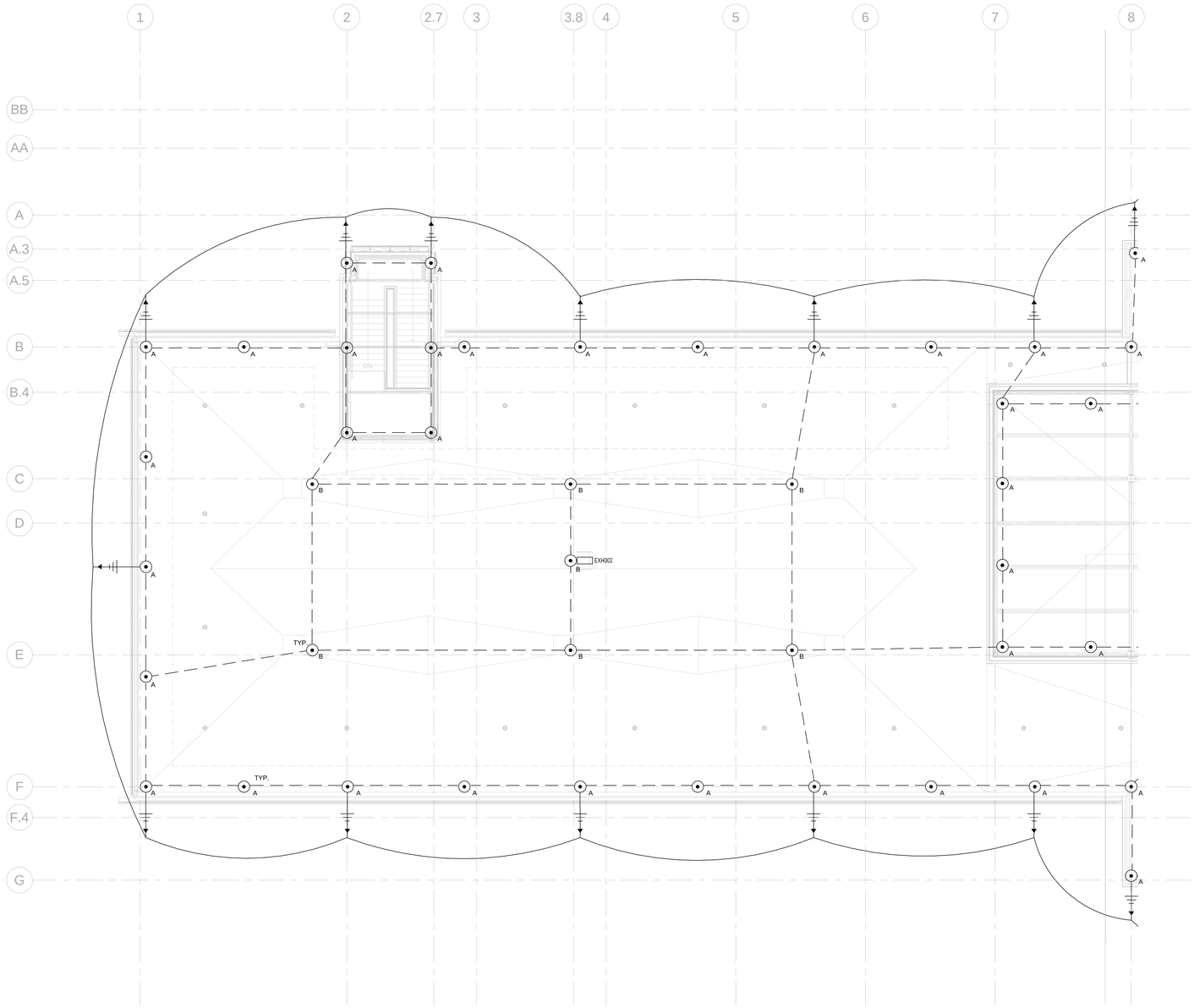

NOTES:

A. AIR TERMINALS: TAKE CARE TO INSURE THAT ALL POINTS ARE WITHIN 2'-0" OF OUTSIDE BUILDING EDGE, OUTSIDE CORNERS, RIDGE ENDS AND THAT MAXIMUM SPACING DOES NOT EXCEED 20'-0", AND THAT MINIMUM PROJECTION ABOVE OBJECT PROTECTED IS 10" (POINTS PROJECTION IS 24" MAYBE SPACED @25' MAX).

B. MAINTAIN HORIZONTAL OR DOWNWARD COURSING OF MAIN CONDUCTORS AND INSURE THAT ALL BENDS HAVE AT LEAST AN 8" RADIUS AND DO NOT EXCEED 90 DEGREES.

C. ATTACH ALL EXPOSED ROOF, DOWN LEAD AND BONDING CABLES AT 3'-0" ON CENTER MINIMUM.

D. GROUND ELECTRODES SHALL BE INSTALLED, BUT IN NO INSTANCE SHALL THEY BE LESS THAN 1'-0" BELOW GRADE AND 2'-0" FROM FOUNDATION WALL. DRIVEN RODS SHALL PENETRATE THE EARTH AT LEAST 10'-0".

E. BOND TO WATER SERVICE AND OTHER PIPING SYSTEMS AS REQUIRED BY CODES.

F. INTERCONNECT LIGHTNING PROTECTION GROUNDING TO ELECTRIC, TELEPHONE AND OTHER BUILDING GROUND SYSTEMS AS REQUIRED BY CODES.

G. SYSTEM SHALL BE INSTALLED PER CODE COMPLIANCE AND SYSTEM CERTIFICATION. ANY MAJOR VARIANCE SHALL ENTAIL RESUBMITTAL AND NEW APPROVAL.

H. PROVIDE LIGHTNING PROTECTION PER NFPA 780.

I. BOND ALL ROOF DRAINS TO LIGHTNING PROTECTION SYSTEM.

KEYNOTES:

1. HORIZONTALLY OR VERTICALLY MOUNTED AIR TERMINAL ON ROOF.
2. MOUNTED AIR TERMINAL ON ROOF.

100% SUBMITTAL

NORTH

AECOM

AECOM TECHNICAL SERVICES, INC.
3101 WILSON BOULEVARD
SUITE 900
ARLINGTON, VA 22201

T: 703-682-4900 F: 703.682.4901
www.aecom.com

SEAL AREA

STATE OF MARYLAND
LIEB BRIAN
10-11-2012
No. 40968
PROFESSIONAL ENGINEER

KEY PLAN

REV	DATE	DESCRIPTION	S&R BR.	CUSTOMER	PM	SECT. HEAD

	INITIALS	DATE
DRAWN BY	LB/BF	
CHECKED BY	JR/MM	
A-E MANAGER	EW	
ENVIRONMENTAL BRANCH	JH	
SAFETY BRANCH	CS	
CM	MMD	
PM	RWP	
CUSTOMER	JWB	
ENG. BRANCH	DGL	

LIGHTNING PROTECTION PLAN SEGMENT A

E-206a

FLIGHT PROJECTS BUILDING

NATIONAL AERONAUTICS AND SPACE ADMINISTRATION

GODDARD SPACE FLIGHT CENTER GREENBELT, MARYLAND
FACILITIES MANAGEMENT DIVISION

DATE ISSUED	CoF CODE OR WR#	AECOM PROJECT NO.	SCALE
10/12/2012	12GXAZ	60187636	1/8" = 1'-0"

FILE DATE: 10/11/2012 2:15:10 PM

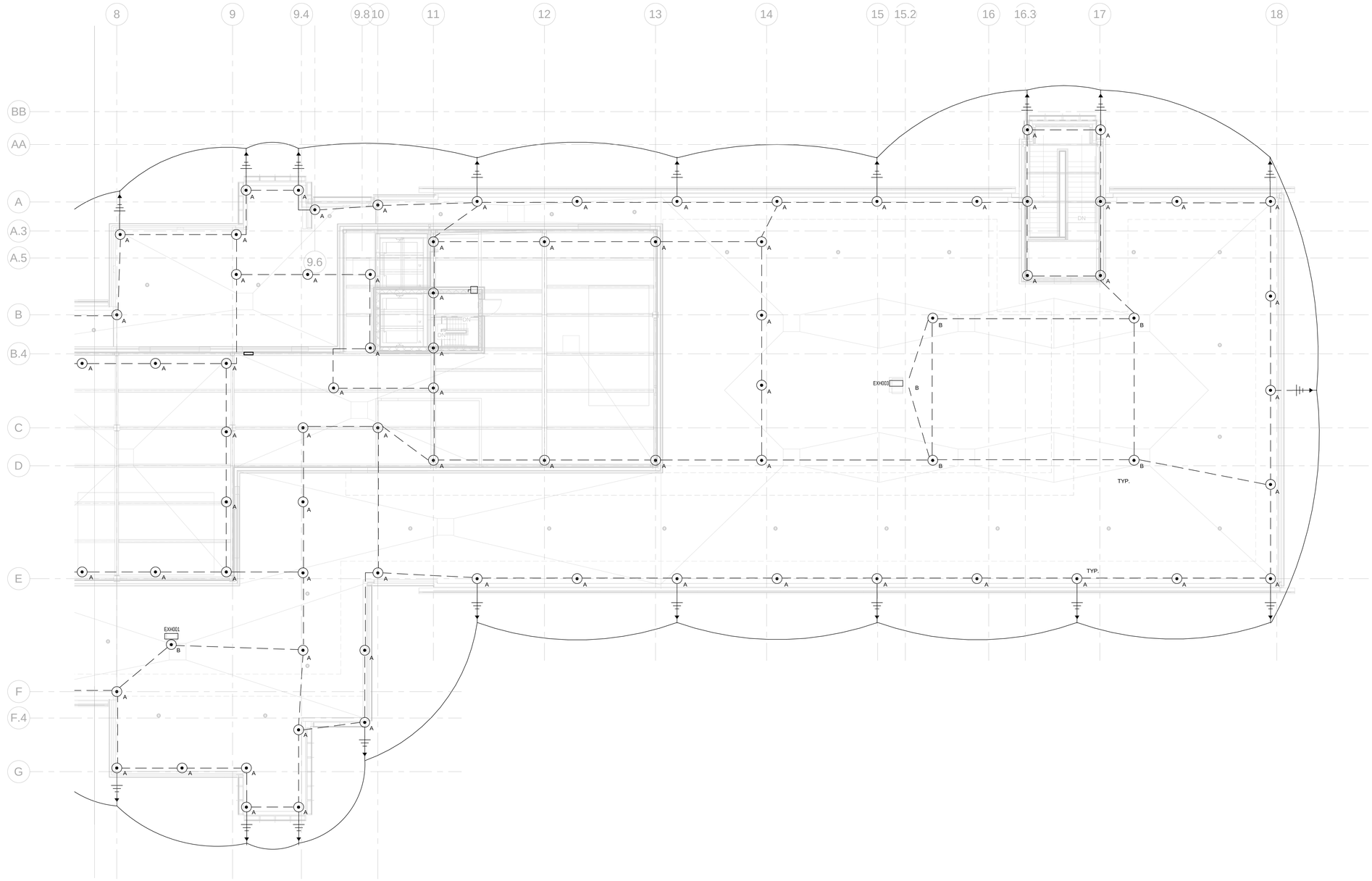

NOTES:

A. AIR TERMINALS: TAKE CARE TO INSURE THAT ALL POINTS ARE WITHIN 2'-0" OF OUTSIDE BUILDING EDGE, OUTSIDE CORNERS, RIDGE ENDS AND THAT MAXIMUM SPACING DOES NOT EXCEED 20'-0", AND THAT MINIMUM PROJECTION ABOVE OBJECT PROTECTED IS 10" (POINTS PROJECTION IS 24" MAYBE SPACED @25' MAX).

B. MAINTAIN HORIZONTAL OR DOWNWARD COURSING OF MAIN CONDUCTORS AND INSURE THAT ALL BENDS HAVE AT LEAST AN 8" RADIUS AND DO NOT EXCEED 90 DEGREES.

C. ATTACH ALL EXPOSED ROOF, DOWN LEAD AND BONDING CABLES AT 3'-0" ON CENTER MINIMUM.

D. GROUND ELECTRODES SHALL BE INSTALLED, BUT IN NO INSTANCE SHALL THEY BE LESS THAN 1'-0" BELOW GRADE AND 2'-0" FROM FOUNDATION WALL. DRIVEN RODS SHALL PENETRATE THE EARTH AT LEAST 10'-0".

E. BOND TO WATER SERVICE AND OTHER PIPING SYSTEMS AS REQUIRED BY CODES.

F. INTERCONNECT LIGHTNING PROTECTION GROUNDING TO ELECTRIC, TELEPHONE AND OTHER BUILDING GROUND SYSTEMS AS REQUIRED BY CODES.

G. SYSTEM SHALL BE INSTALLED PER CODE COMPLIANCE AND SYSTEM CERTIFICATION. ANY MAJOR VARIANCE SHALL ENTAIL RESUBMITTAL AND NEW APPROVAL.

H. PROVIDE LIGHTNING PROTECTION PER NFPA 780.

I. BOND ALL ROOF DRAINS TO LIGHTNING PROTECTION SYSTEM.

KEYNOTES:

1. HORIZONTALLY OR VERTICALLY MOUNTED AIR TERMINAL ON ROOF.
2. MOUNTED AIR TERMINAL ON ROOF.

100% SUBMITTAL

NORTH

AECOM

AECOM TECHNICAL SERVICES, INC.
3101 WILSON BOULEVARD
SUITE 900
ARLINGTON, VA 22201

T: 703-682-4900 F: 703.682.4901
www.aecom.com

SEAL AREA

STATE OF MARYLAND
LICENSED
PROFESSIONAL ENGINEER
No. 40968
10-11-2012

KEY PLAN

REV	DATE	DESCRIPTION	S&R BR.	CUSTOMER	PM	SECT. HEAD

	INITIALS	DATE
DRAWN BY	LB/BF	
CHECKED BY	JR/MM	
A-E MANAGER	EW	
ENVIRONMENTAL BRANCH	JH	
SAFETY BRANCH	CS	
CM	MMD	
PM	RWP	
CUSTOMER	JWB	
ENG. BRANCH	DGL	

LIGHTNING PROTECTION PLAN SEGMENT B

E-206b

FLIGHT PROJECTS BUILDING

NATIONAL AERONAUTICS AND SPACE ADMINISTRATION

GODDARD SPACE FLIGHT CENTER GREENBELT, MARYLAND
FACILITIES MANAGEMENT DIVISION

DATE ISSUED	CoF CODE OR WR#	AECOM PROJECT NO.	SCALE
10/12/2012	12GXAZ	60187636	1/8" = 1'-0"

FILE DATE: 10/11/2012 2:15:12 PM

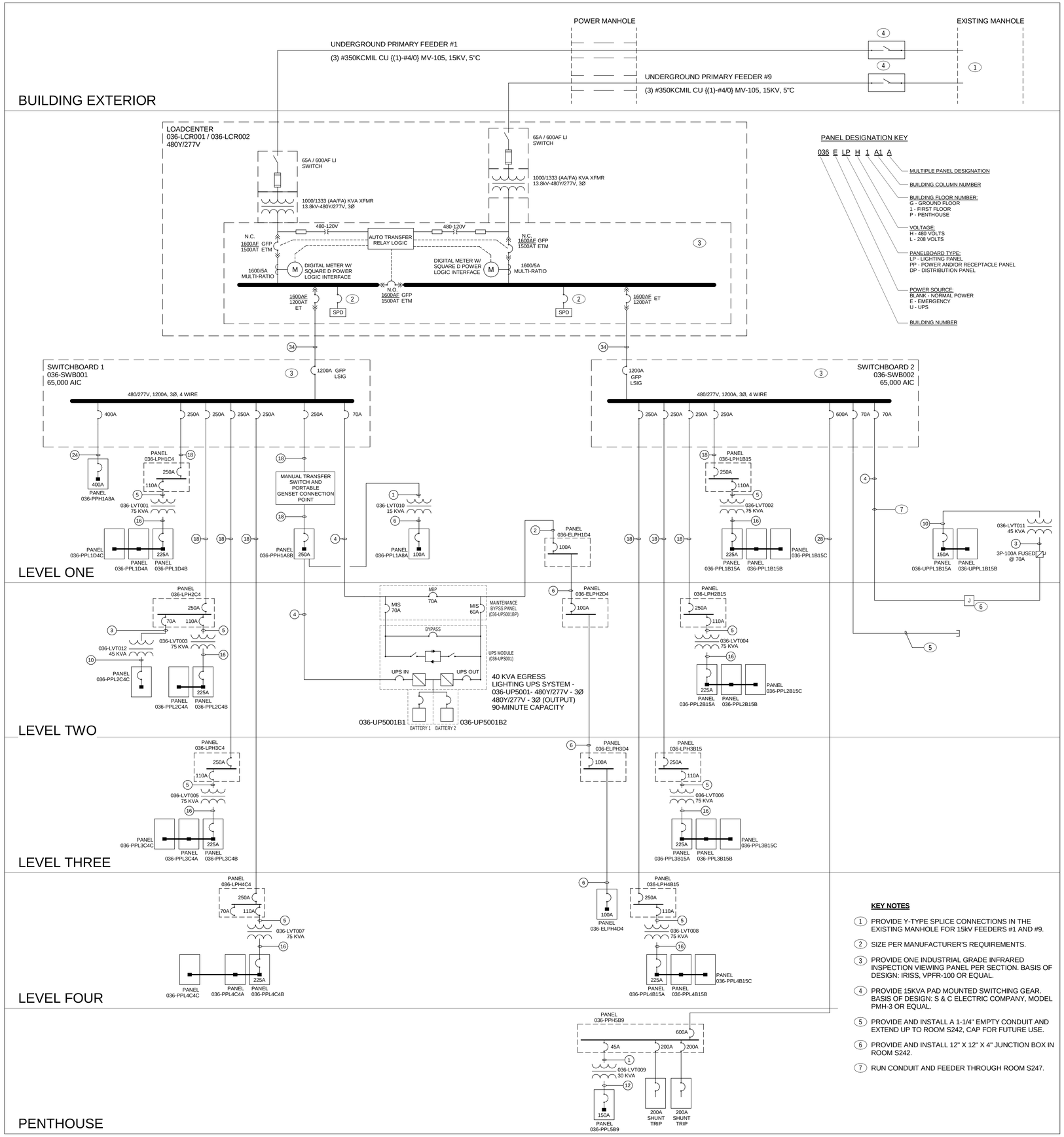

PANEL DESIGNATION KEY

036 E LP H 1 A1 A

- MULTIPLE PANEL DESIGNATION
- BUILDING COLUMN NUMBER
- BUILDING FLOOR NUMBER:
  G - GROUND FLOOR
  1 - FIRST FLOOR
  P - PENTHOUSE
- VOLTAGE:
  H - 480 VOLTS
  L - 208 VOLTS
- PANELBOARD TYPE:
  LP - LIGHTING PANEL
  PP - POWER AND/OR RECEPTACLE PANEL
  DP - DISTRIBUTION PANEL
- POWER SOURCE:
  BLANK - NORMAL POWER
  E - EMERGENCY
  U - UPS
- BUILDING NUMBER

LEGEND OF FEEDER SIZES - COPPER CONDUCTORS

FEEDER SYMBOL	CONDUCTORS (3-WIRE, 3Ø) WITH GROUND	RACEWAY SIZE/QTY	CONDUCTORS (4-WIRE, 3Ø) WITH GROUND	RACEWAY SIZE/QTY	AMPS
1	THREE #4 & ONE #8 GND	1"			65
2			FOUR #4 & ONE #8 GND	1"	
3	3HREE #4 & ONE #8 GND	1-1/4"			85
4			FOUR #3 & ONE #8 GND	1-1/4"	
5	THREE #2 & ONE #8 GND	1-1/4"			115
6			FOUR #2 & ONE #8 GND	1-1/2"	
7	THREE #1 & ONE #6 GND	1-1/2"			130
8			FOUR #1 & ONE #6 GND	1-1/2"	
9	THREE #1/0 & ONE #6 GND	1-1/2"			150
10			FOUR #1/0 & ONE #6 GND	2"	
11	THREE #2/0 & ONE #6 GND	2"			175
12			FOUR #2/0 & ONE #6 GND	2"	
13	THREE #3/0 & ONE #6 GND	2"			200
14			FOUR #3/0 & ONE #6 GND	2"	
15	THREE #4/0 & ONE #4 GND	2"			230
16			FOUR #4/0 & ONE #4 GND	2-1/2"	
17	THREE 250 KCMIL & ONE #4 GND	2-1/2"			255
18			FOUR 250 KCMIL & ONE #4 GND	3"	
19	THREE 350 KCMIL & ONE #3 GND	3"			310
20			FOUR 350 KCMIL & ONE #4 GND	3"	
21	THREE 500 KCMIL & ONE #3 GND	3"			380
22			FOUR 500 KCMIL & ONE #3 GND	3-1/2"	
23	THREE #3/0 & ONE #3 GND EACH RACEWAY	(2) 2"			400
24			FOUR #3/0 & ONE #3 GND EACH RACEWAY	(2) 2"	
24			FIVE #3/0 & ONE #3 GND EACH RACEWAY	(2) 2-1/2"	
25	THREE 250 KCMIL & ONE #2 GND EACH RACEWAY	(2) 3"			500
26			FOUR 250 KCMIL & ONE #2 GND EACH RACEWAY	(2) 3"	
27	THREE 350 KCMIL & ONE #1 GND EACH RACEWAY	(2) 3"			600
28			FOUR 350 KCMIL & ONE #1 GND EACH RACEWAY	(2) 3"	
29	THREE 300 KCMIL & ONE #1/0 GND EACH RACEWAY	(3) 2-1/2"			800
30			FOUR 300 KCMIL & ONE #1/0 GND EACH RACEWAY	(3) 3"	
31	THREE 400 KCMIL & ONE #2/0 GND EACH RACEWAY	(3) 3"			1000
32			FOUR 400 KCMIL & ONE #2/0 GND EACH RACEWAY	(3) 3"	
33	THREE 350 KCMIL & ONE #3/0 GND EACH RACEWAY	(4) 2-1/2"			1200
34			FOUR 350 KCMIL & ONE #3/0 GND EACH RACEWAY	(4) 3"	
35	THREE 500 & ONE #4/0 GND EACH RACEWAY	(4) 3"			1350
36			FOUR 500 KCMIL & ONE #4/0 GND EACH RACEWAY	(4) 3-1/2"	
37	THREE 400 KCMIL & ONE #4/0 GND EACH RACEWAY	(5) 2-1/2"			1600
38			FOUR 400 KCMIL & ONE #4/0 GND EACH RACEWAY	(5) 3"	
39	THREE 400 KCMIL & ONE 250 KCMIL GND EACH RACEWAY	(6) 2-1/2"			2000
40			FOUR 500 KCMIL & ONE 250 KCMIL GND EACH RACEWAY	(6) 3"	
41	THREE 500 KCMIL & ONE 350 KCMIL GND EACH RACEWAY	(7) 3"			2500
42			FOUR 500 KCMIL & ONE 350 KCMIL GND EACH RACEWAY	(7) 3"	
43	THREE 500 KCMIL & ONE 400 KCMIL GND EACH RACEWAY	(8) 3"			3000
44			FOUR 500 KCMIL & ONE 400 KCMIL GND EACH RACEWAY	(8) 3-1/2"	
45	THREE 500 KCMIL & ONE 500 KCMIL GND EACH RACEWAY	(9) 3"			3200
46			FOUR 500 KCMIL & ONE 500 KCMIL GND EACH RACEWAY	(9) 3-1/2"	
47	THREE 500 KCMIL & ONE 500 KCMIL GND EACH RACEWAY	(10) 3"			3500
48			FOUR 500 KCMIL & ONE 500 KCMIL GND EACH RACEWAY	(10) 3-1/2"	
49	THREE 500 KCMIL & ONE 500 KCMIL GND EACH RACEWAY	(11) 3"			4000
50			FOUR 500 KCMIL & ONE 500 KCMIL GND EACH RACEWAY	(11) 3-1/2"	

NOTE: 1. NOT ALL SIZES INDICATED IN SCHEDULE ARE USED IN THIS PROJECT.
2. WHERE A NUMBER IN PARENTHESIS IS SHOWN (#), IT INDICATES NUMBER OF PARALLEL SETS.

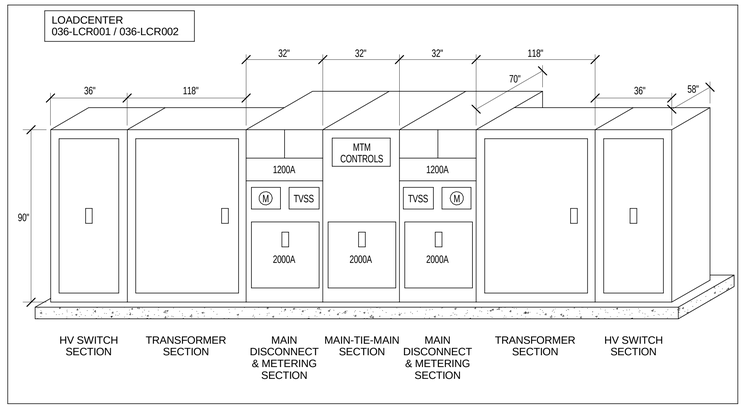

KEY NOTES

1. PROVIDE Y-TYPE SPLICE CONNECTIONS IN THE EXISTING MANHOLE FOR 15kV FEEDERS #1 AND #9.
2. SIZE PER MANUFACTURER'S REQUIREMENTS.
3. PROVIDE ONE INDUSTRIAL GRADE INFRARED INSPECTION VIEWING PANEL PER SECTION. BASIS OF DESIGN: IRISS, VPFR-100 OR EQUAL.
4. PROVIDE 15KVA PAD MOUNTED SWITCHING GEAR. BASIS OF DESIGN: S & C ELECTRIC COMPANY, MODEL PMH-3 OR EQUAL.
5. PROVIDE AND INSTALL A 1-1/4" EMPTY CONDUIT AND EXTEND UP TO ROOM S242, CAP FOR FUTURE USE.
6. PROVIDE AND INSTALL 12" X 12" X 4" JUNCTION BOX IN ROOM S242.
7. RUN CONDUIT AND FEEDER THROUGH ROOM S247.

100% SUBMITTAL

AECOM
AECOM TECHNICAL SERVICES, INC.
3101 WILSON BOULEVARD
SUITE 900
ARLINGTON, VA 22201
T: 703-682-4900 F: 703.682.4901
www.aecom.com

SEAL AREA

STATE OF MARYLAND — JEFFREY B. FRY — No. 40961 — PROFESSIONAL ENGINEER

KEY PLAN

REV	DATE	DESCRIPTION	S&R BR.	CUSTOMER	PM	SECT. HEAD

	INITIALS	DATE
DRAWN BY	LB/BF	
CHECKED BY	JR/MM	
A-E MANAGER	EW	
ENVIRONMENTAL BRANCH	JH	
SAFETY BRANCH	CS	
CM	MMD	
PM	RWP	
CUSTOMER	JWB	
ENG. BRANCH	DGL	

ELECTRICAL ONE-LINE RISER DIAGRAM

E-600

FLIGHT PROJECTS BUILDING

NATIONAL AERONAUTICS AND SPACE ADMINISTRATION
GODDARD SPACE FLIGHT CENTER GREENBELT, MARYLAND
FACILITIES MANAGEMENT DIVISION

DATE ISSUED	CoF CODE OR WR#	AECOM PROJECT NO.	SCALE
10/12/2012	12GXAZ	60187636	1/8" = 1'-0"

FILE DATE: 10/17/2012 11:03:25 AM

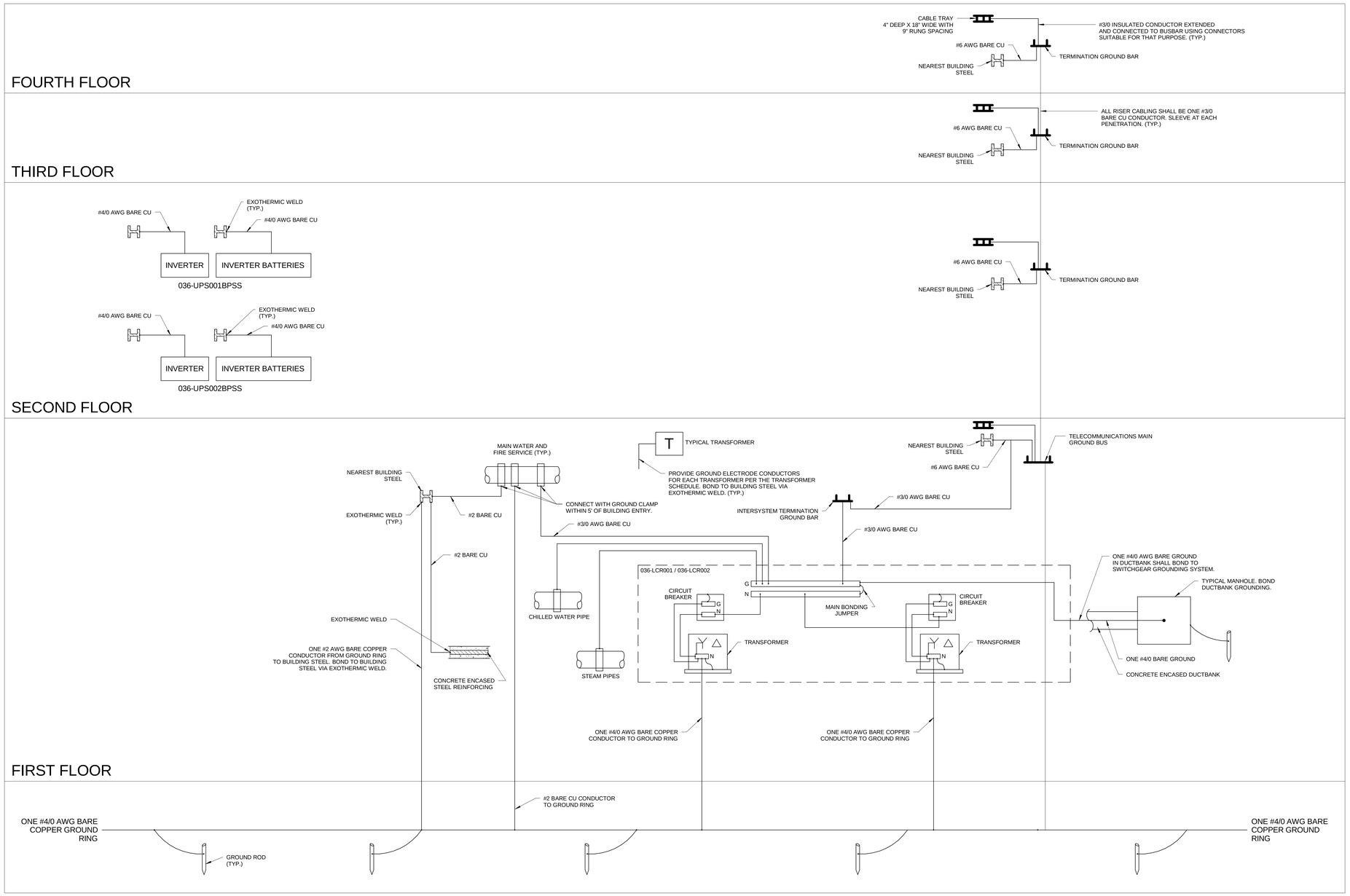

100% SUBMITTAL

AECOM
AECOM TECHNICAL SERVICES, INC.
3101 WILSON BOULEVARD
SUITE 900
ARLINGTON, VA 22201
T: 703-682-4900 F: 703.682.4901
www.aecom.com

SEAL AREA

STATE OF MARYLAND
JIEEB PEN
10-11-2012
NO. 40964
PROFESSIONAL ENGINEER

KEY PLAN

REV	DATE	DESCRIPTION	S&R BR.	CUSTOMER	PM	SECT. HEAD

	INITIALS	DATE
DRAWN BY	LB/BF	
CHECKED BY	JR/MM	
A-E MANAGER	EW	
ENVIRONMENTAL BRANCH	JH	
SAFETY BRANCH	CS	
CM	MMD	
PM	RWP	
CUSTOMER	JWB	
ENG. BRANCH	DGL	

ELECTRICAL GROUNDING RISER DIAGRAM

E-601

FLIGHT PROJECTS BUILDING

NATIONAL AERONAUTICS AND SPACE ADMINISTRATION
GODDARD SPACE FLIGHT CENTER GREENBELT, MARYLAND
FACILITIES MANAGEMENT DIVISION

DATE ISSUED	CoF CODE OR WR#	AECOM PROJECT NO.	SCALE
10/12/2012	12GXAZ	60187636	1/8" = 1'-0"

FILE DATE: 10/11/2012 2:15:14 PM

LIGHTING FIXTURE SCHEDULE

TYPE	DESCRIPTION	VOLTAGE /LAMPS/WATTAGE	MOUNTING	MANUFACTURER	MODEL NUMBER	NOTES
A1	2 x 4 DIRECT / INDIRECT	277 / 2 / 32	RECESSED	LITHONIA	2AV-G-2-32-MDR-MVOLT-GEB10RS	
-	-	-	-	-	-	
C1	4" ROUND CFL DOWNLIGHT	MVOLT	RECESSED	GOTHAM	AF-142TRT- 6AR-MVOLT	
C2	4" DIMMABLE SQUARE DOWNLIGHT	277 / LED / 20	RECESSED	USAI	3130-10-C-LSTA4-8320-C1-40-30-NC-277-DIML4	
C3	4" WET SQUARE DOWNLIGHT	277 / LED / 20	RECESSED	USAI	3130-10-C-LSTA4-8320-C1-40-30-NC-277-W	
C4	6" ROUND WALL WASHER	MVOLT	RECESSED	GOTHAM	AFW-1/42TRT-6AR-CGL-MVOLT-ECOS-WLP	
E1	SINGLE FACE EXIT SIGN	277 / LED / -	SURFACE	LITHONIA	EDG-1-R	
E2	DOUBLE FACE EXIT SIGN	277 / LED / -	SURFACE	LITHONIA	EDG-2-R	
F1	DIMMABLE LINEAR SLOTS	277 / 1 / 32	RECESSED	MARK LIGHTING	SL4R-4-DF-2-T8-EDB(ADVANCE MARK 10)277-FA	
-	-	-	-	-	-	
G1	LINEAR SLOTS	277 / 2 / 32	RECESSED	MARK LIGHTING	SL4R-4-DF-2-T8-EB-277-FA	
G2	4" LINEAR SLOTS	277 / 1 / 54	SURFACE	MARK LIGHTING	STC-4-1T5HO-EBPR-277-IND.	
-	-	-	-	-	-	
H1	DIMMABLE 4" LINEAR SLOTS	277 / 1 / 54	RECESSED	PEERLESS LIGHTING	LWR9-G-1-54TSHO-HOL-U4-277-ADEZ	
H2	DECORATIVE SCONCE	277 / 1 / 21	SURFACE	WINONA	6030-38-277V-OA-BAL-STD	
-	-	-	-	-	-	
P1	ELEVATOR PIT LIGHT	277 / 1 / 26	SURFACE	RIG - A - LITE	CVP-26F-27-G-G-W	
S1	4' UTILITY FIXTURE	277 / 2 / 32	SURFACE	LITHONIA	WC-2-32-MVOLT-GEB10PS	
S2	4' UTILITY FIXTURE	277 / 2 / 32	RECESSED	LITHONIA	GT8-2-32-A121254-MVOLT-GEB10RS	
-	-	-	-	-	-	
V1	4' LINEAR LED STRIP	277 / LED	ADJ. SURFACE	USAI	TOLVW1-XXXX-35S-CL-RM/LVCA-LPSDC3-100-LIN	
V2	4' BLUE LINEAR LED STRIP	277 / LED	ADJ. SURFACE	USAI	TOLVW1-XXXX-35S-CL-RM/LVCA-LPSDC3-100-LIN	
-	-	-	-	-	-	
W1	EXTERIOR STEP LIGHT	277 / LED / 24	RECESSED	WINONA	LED-STEPO3-12-L-001/HO-277-BSS-WL-STD	
W2	EXTERIOR STEP LIGHT	277 / LED / 24	RECESSED	WINONA	LED-STEPO3-12-C-001/HO-277-B22-WL-STD	
W3	EXTERIOR WALL PACK LIGHT	277 / LED / 24	SURFACE	WINONA	PFL-707-40-RGB-120/277-A7-A4-SGB-STD	
SA1	EXTERIOR FIXTURE WITH POLE	277 / 1 / 150 CMH	POLE 12'	BEGA-US	BEGA 8309-MH	
SB4	EXTERIOR PARKING FIXTURE W/POLE	480 / 1 / 250	POLE 30'	LITHONIA	KVS1-250S-R5-480-RP09-DD8/RTA-30-8E-DM19--DDB	
SB5	EXTERIOR PARKING FIXTURE W/POLE	480 / 1 / 250	POLE 30'	LITHONIA	KVS1-250S-R5-480-RP09-DD8/RTA-30-8E-DM28--DDB	1

GENERAL NOTE: PROVIDE ALL LIGHTING FIXTURE ACCESSORIES FOR COMPLETE FIXTURE INSTALLATION. REFER TO LANDSCAPE DRAWINGS FOR SITE FIXTURE BASE AND MOUNTING DETAILS.

FIXTURE NOTES:
1. TWO ARM-MOUNT FIXTURES AT 180°.
2. REFER TO ARCHITECTURAL ELEVATIONS FOR MOUNTING HEIGHTS.

LCPA — CABINET CIRCUIT SCHEDULE

000-A2D3L-8A7: 480Y/277 VAC, 3 PHASE, 4 WIRE, 24 CIRCUIT, DIGITAL MAIN LUGS ONLY 100A

DIMMER MODULE				CONTROL DESIGNATOR	
BRKR	TYPE	CKT	PHASE	DMX CHANNEL	DIM FUN
20/1	ND	1A	A	1	ND
20/1	ND	1B		2	ND
20/1	ND	2A	B	3	ND
20/1	ND	2B		4	ND
20/1	ND	3A	C	5	ND
20/1	ND	3B		6	ND
20/1	ND	4A	A	7	ND
20/1	ND	4B		8	ND
20/1	ND	5A	B	9	ND
20/1	ND	5B		10	ND
20/1	ND	6A	C	11	ND
20/1	ND	6B		12	ND

MODULE TYPE:
FUNCTION: ND - NON-DIM
(DIM FUN) MX - ADVANCE MARK-X BALLAST
(OR "TU-WIRE") EM - EMERGENCY CIRCUIT

PROVIDE RS-232 INTERFACE STATION TYPE D42AV

LCPB — CABINET CIRCUIT SCHEDULE

000-A2D3L-8A7: 480Y/277 VAC, 3 PHASE, 4 WIRE, 24 CIRCUIT, DIGITAL MAIN LUGS ONLY 100A

DIMMER MODULE				CONTROL DESIGNATOR	
BRKR	TYPE	CKT	PHASE	DMX CHANNEL	DIM FUN
20/1	MX	1A	A	1	MX
20/1	MX	1B		2	MX
20/1	MX	2A	B	3	MX
20/1	MX	2B		4	MX
20/1	MX	3A	C	5	MX
20/1	MX	3B		6	MX
20/1	MX	4A	A	7	MX
20/1	MX	4B		8	MX
20/1	MX	5A	B	9	MX
20/1	MX	5B		10	MX
20/1	MX	6A	C	11	MX
20/1	MX	6B		12	MX

MODULE TYPE:
FUNCTION: ND - NON-DIM
(DIM FUN) MX - ADVANCE MARK-X BALLAST
(OR "TU-WIRE") EM - EMERGENCY CIRCUIT

PROVIDE RS-232 INTERFACE STATION TYPE D42AV

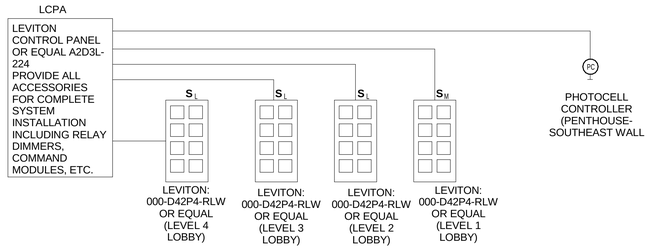

INDOOR LIGHTING CONTROL DIAGRAM

SYMPOSIUM LIGHTING CONTROL DIAGRAM

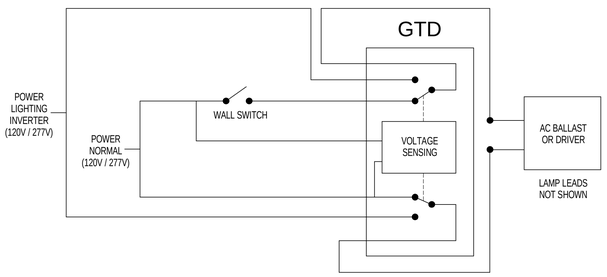

GENERATOR TRANSFER DEVICE DETAIL

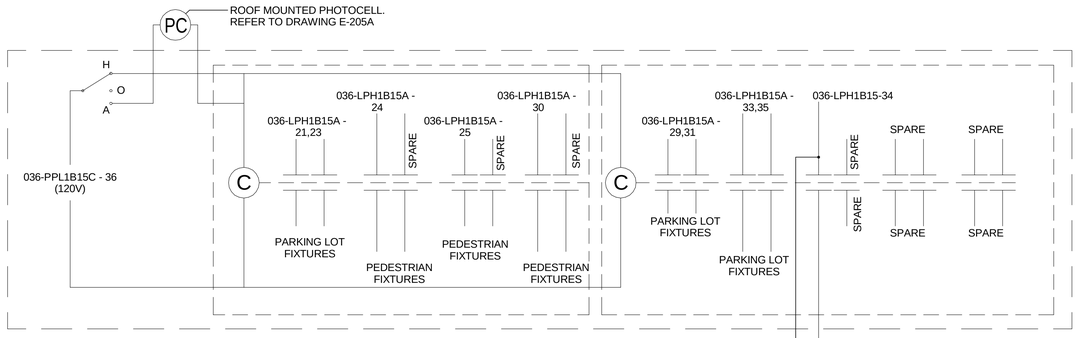

SITE PARKING LOT CONTROL DIAGRAM "LCPC"

PROVIDE MULTI-POLE MECHANICALLY HELD LIGHTING CONTACTORS WITHIN A NEMA 1 ENCLOSURE.
BASIS OF DESIGN: SQUARE "D" TYPE LX, CLASS 8903.

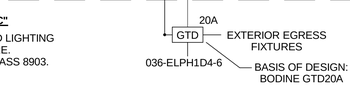

100% SUBMITTAL

AECOM
AECOM TECHNICAL SERVICES, INC.
3101 WILSON BOULEVARD
SUITE 900
ARLINGTON, VA 22201
T: 703-682-4900 F: 703.682.4901
www.aecom.com

SEAL AREA

STATE OF MARYLAND — LEEB, BRIAN — No. 40964 — PROFESSIONAL ENGINEER — 10-12-2012

KEY PLAN

REV	DATE	DESCRIPTION	S&R BR.	CUSTOMER	PM	SECT. HEAD

	INITIALS	DATE
DRAWN BY	LB/BF	
CHECKED BY	JR/MM	
A-E MANAGER	EW	
ENVIRONMENTAL BRANCH	JH	
SAFETY BRANCH	CS	
CM	MMD	
PM	RWP	
CUSTOMER	JWB	
ENG. BRANCH	DGL	

ELECTRICAL LIGHTING FIXTURE SCHEDULE

E-701

FLIGHT PROJECTS BUILDING

NATIONAL AERONAUTICS AND SPACE ADMINISTRATION
GODDARD SPACE FLIGHT CENTER GREENBELT, MARYLAND
FACILITIES MANAGEMENT DIVISION

DATE ISSUED	CoF CODE OR WR#	AECOM PROJECT NO.	SCALE
10/12/2012	12GXAZ	60187636	As indicated

FILE DATE: 10/11/2012 2:15:15 PM

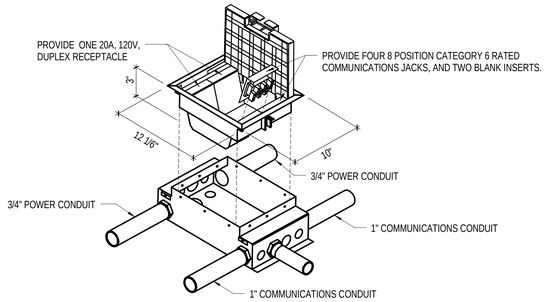

NOTES:

1. FLOOR BOX SHALL BE CONCRETE TIGHT.
2. INSERT SHALL BE FOUR COMPARTMENT BOX, WITH ONE SINGLE GANG PER COMPARTMENT. PROVIDE DIVIDERS AS REQUIRED BETWEEN GANGS SUCH THAT POWER CABLE IS COMPLETELY SEPARATED FROM ALL OTHER CABLES.
3. LID SHALL BE 11-GAUGE STEEL WITH A REMOVABLE CABLE GUARD FOR EGRESS OF POWER AND COMMUNICATIONS CABLES. LID SHALL BE SUITABLE TO RECEIVE THE SPECIFIC FLOOR FINISH MATERIAL USED IN THE ROOM IN WHICH IT IS INSTALLED.
4. CARPET FLANGE SHALL BE ALUMINUM, 1/4" HIGH, WITH BRUSHED ALUMINUM FINISH.
5. FLOOR BOX SHALL HAVE STAINLESS STEEL COMPRESSION LATCHES.

1 FLOOR BOX DETAIL
NO SCALE

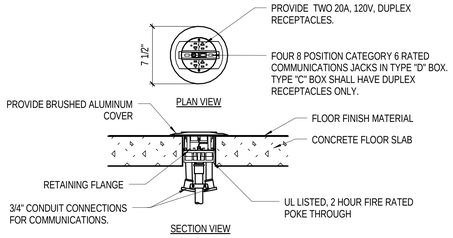

NOTES:

1. SPRING LOADED PROTECTIVE SLIDE COVERS FOR RECEPTACLES. LISTED UNDER UL 514A AND UL 514C FOR SCRUB WATER EXCLUSION TEST.
2. CARPET FLANGE FOR TYPE "C" BOX SHALL BE DIE CAST ZINC ALLOY, 1/8" THICK, WITH TWO-STAGE BLACK TEXTURED PAINT. COVER FOR TYPE "D" BOX SHALL BE BRUSHED ALUMINUM WITH FLANGE SUITABLE FOR FLOOR FINISH WHERE INSTALLED.

2 FLOOR BOX DETAILS
NO SCALE

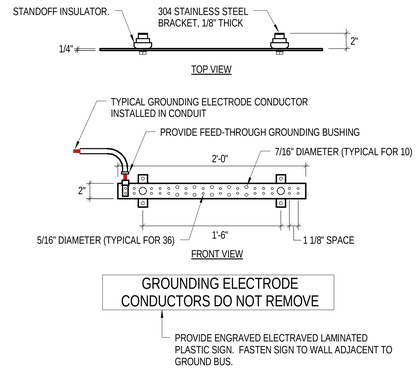

NOTES :

1. PROVIDE GROUND BUS WITH DIMENSIONS AS INDICATED UNLESS NOTED OTHERWISE ON PLANS.

3 GROUND BUS DETAIL
NO SCALE

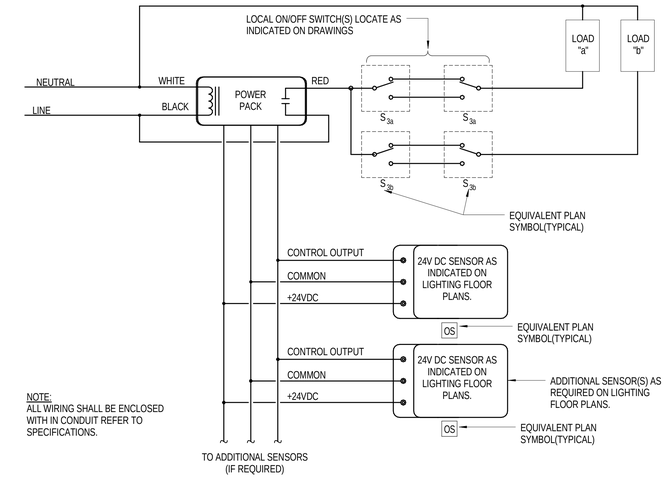

4 MULTIPLE OCCUPANCY SENSORS AND POWER PACKS
NO SCALE

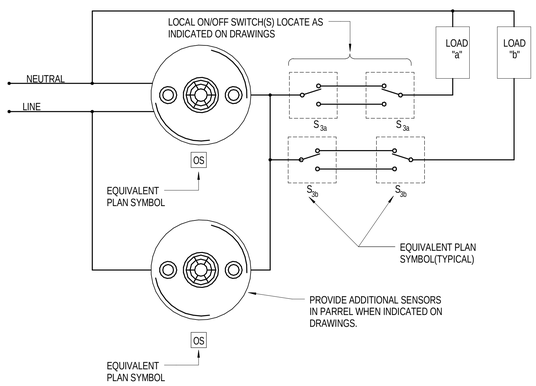

5 LINE VOLTAGE OCCUPANCY SENSOR
NO SCALE

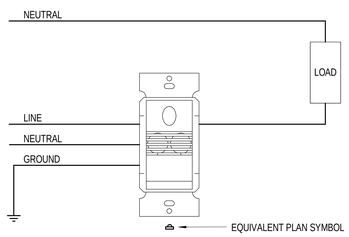

6 TYPICAL WALL SWITCH OCCUPANCY SENSOR
NO SCALE

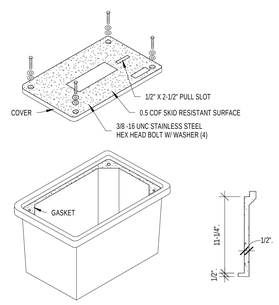

NOTE: DETAIL IS BASED ON STRONGWELL, QUAZITE CAT. #PC11188G12-PC11188G00. STACK UP HANDHOLES TO ACHEVE DEPTH AS REQUIRED.

7 TYPICAL HANDHOLE DETAIL
NO SCALE

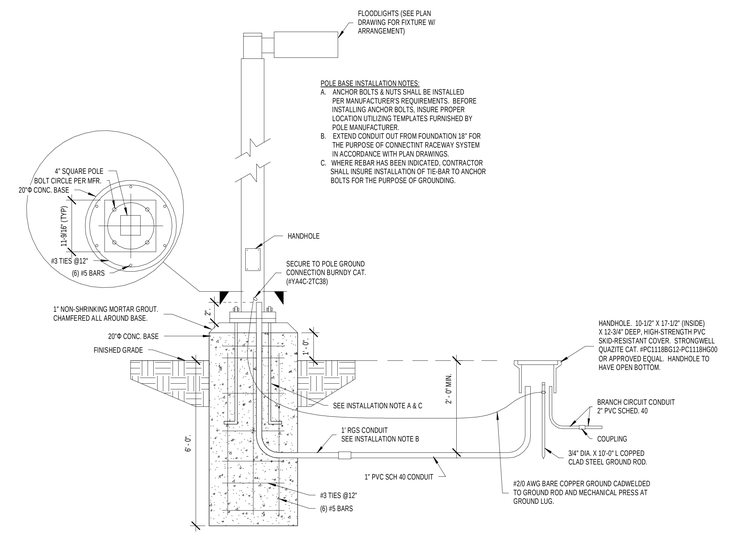

8 PARKING LOT LIGHT POLE DETAIL
NO SCALE

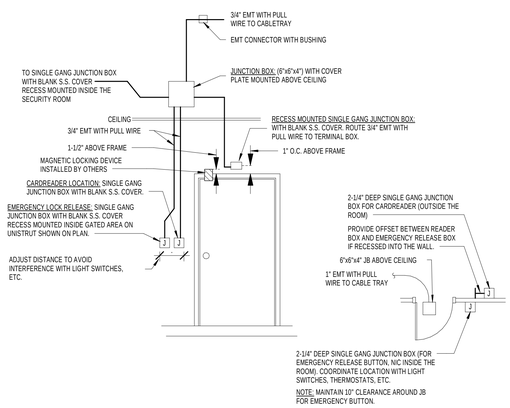

9 TYPICAL CARDREADER ROUGH-IN FOR SINGLE DOORS - MAGNETIC LOCK
NO SCALE

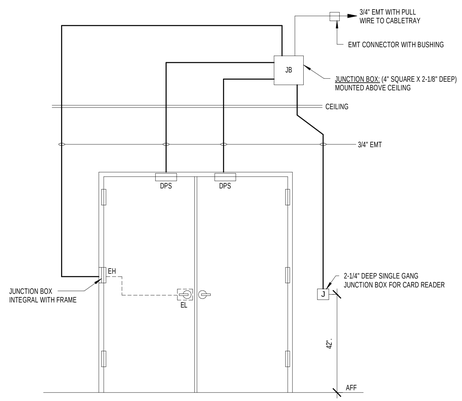

10 TYPICAL CARDREADER ROUGH-IN FOR DOUBLE DOORS - ELECTRIC LOCK
NO SCALE

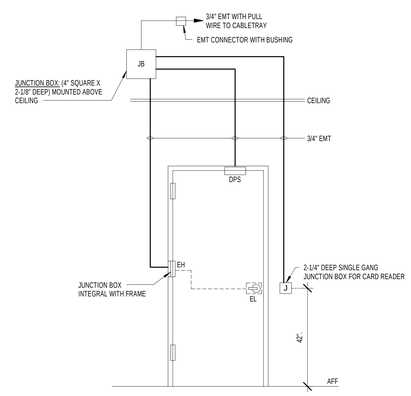

11 TYPICAL CARDREADER ROUGH-IN FOR SINGLE DOORS - ELECTRIC LOCK
NO SCALE

100% SUBMITTAL

AECOM
AECOM TECHNICAL SERVICES, INC.
3101 WILSON BOULEVARD
SUITE 900
ARLINGTON, VA 22201
T: 703-682-4900 F: 703.682.4901
www.aecom.com

SEAL AREA

STATE OF MARYLAND
JIEEB PEN
No. 40968
PROFESSIONAL ENGINEER
10-11-2012

KEY PLAN

REV	DATE	DESCRIPTION	S&R BR.	CUSTOMER	PM	SECT. HEAD

	INITIALS	DATE
DRAWN BY	LB/BF	
CHECKED BY	JR/MM	
A-E MANAGER	EW	
ENVIRONMENTAL BRANCH	JH	
SAFETY BRANCH	CS	
CM	MMD	
PM	RWP	
CUSTOMER	JWB	
ENG. BRANCH	DGL	

ELECTRICAL DETAILS

E-800

FLIGHT PROJECTS BUILDING

NATIONAL AERONAUTICS AND SPACE ADMINISTRATION

GODDARD SPACE FLIGHT CENTER GREENBELT, MARYLAND
FACILITIES MANAGEMENT DIVISION

DATE ISSUED	CoF CODE OR WR#	AECOM PROJECT NO.	SCALE
10/12/2012	12GXAZ	60187636	As indicated

FILE DATE: 10/11/2012 2:15:17 PM

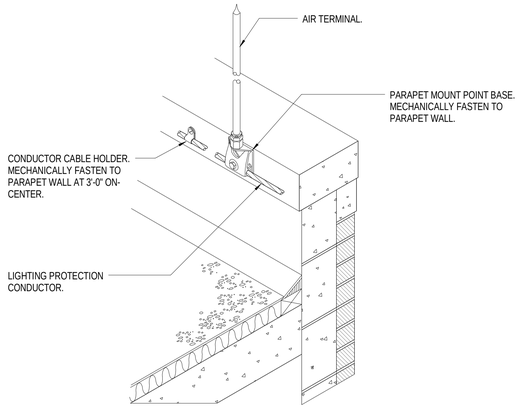

1 AIR TERMINAL TYPE "A" (PARAPET)
NO SCALE

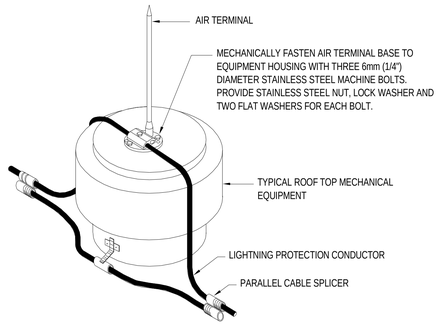

2 AIR TERMINAL TYPE "A" (ROOFTOP EQUIPTMENT)
NO SCALE

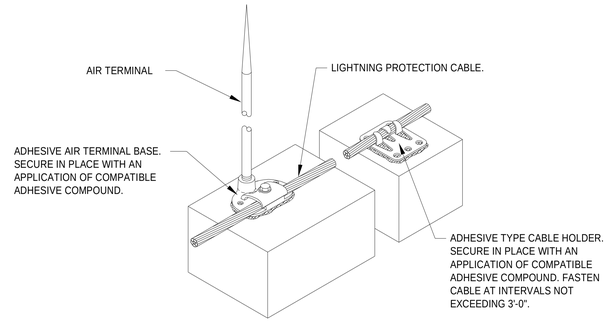

3 AIR TERMINAL TYPE "A" (FLAT ROOF)
NO SCALE

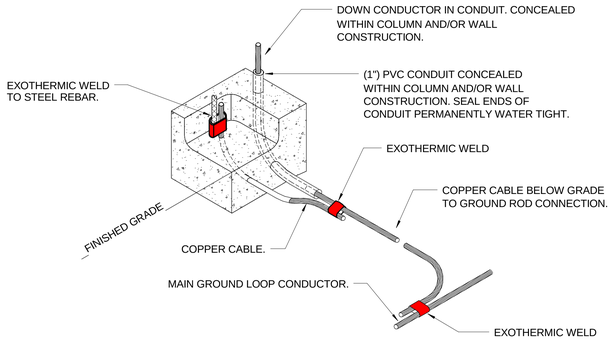

4 CONCEALED DOWNLEAD TO GROUNDING CONNECTION
NO SCALE

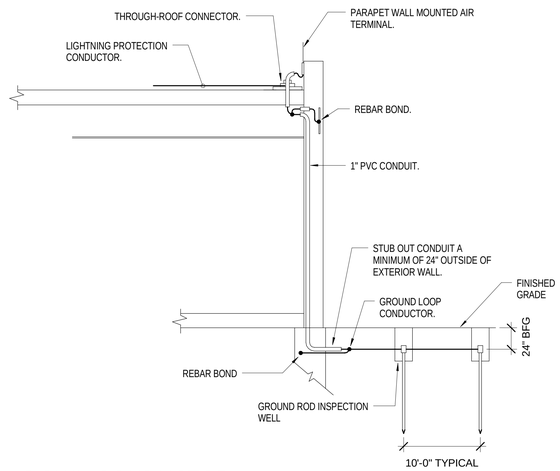

5 DOWN CONDUCTOR
NO SCALE

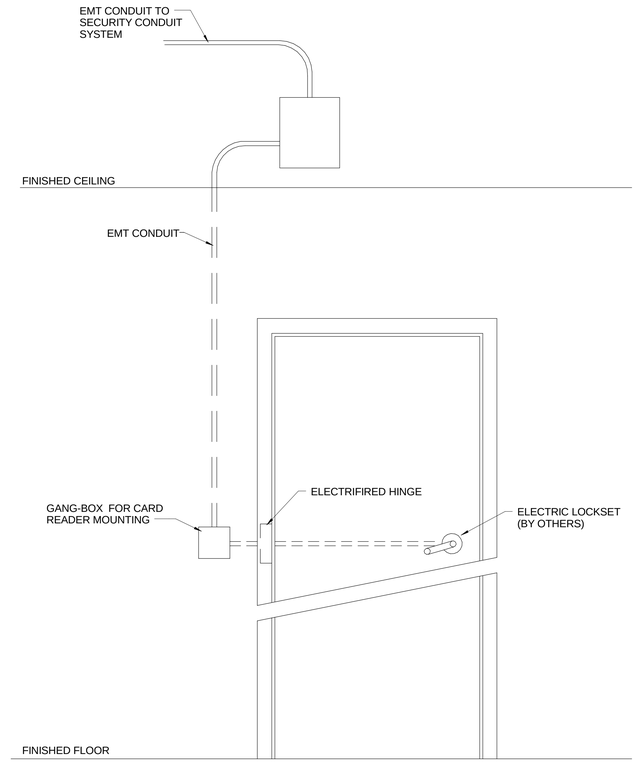

8 SECURE DOOR DETAIL
NO SCALE

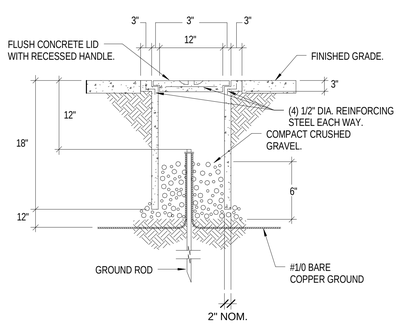

6 GROUND INSPECTION WELL
NO SCALE

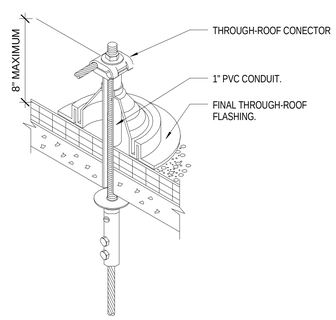

7 THROUGH-ROOF CONNECTOR
NO SCALE

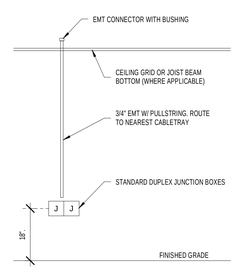

9 ROUGH-IN FOR TELEPHONE / LAN
NO SCALE

100% SUBMITTAL

AECOM

AECOM TECHNICAL SERVICES, INC.
3101 WILSON BOULEVARD
SUITE 900
ARLINGTON, VA 22201

T: 703-682-4900 F: 703.682.4901
www.aecom.com

SEAL AREA

STATE OF MARYLAND
JEEB RAN
10-11-2012
40968
PROFESSIONAL ENGINEER

KEY PLAN

REV	DATE	DESCRIPTION	S&R BR.	CUSTOMER	PM	SECT. HEAD

	INITIALS	DATE
DRAWN BY	LB/BF	
CHECKED BY	JR/MM	
A-E MANAGER	EW	
ENVIRONMENTAL BRANCH	JH	
SAFETY BRANCH	CS	
CM	MMD	
PM	RWP	
CUSTOMER	JWB	
ENG. BRANCH	DGL	

ELECTRICAL DETAILS

E-801

FLIGHT PROJECTS BUILDING

NATIONAL AERONAUTICS AND SPACE ADMINISTRATION

GODDARD SPACE FLIGHT CENTER GREENBELT, MARYLAND
FACILITIES MANAGEMENT DIVISION

DATE ISSUED	CoF CODE OR WRF	AECOM PROJECT NO.	SCALE
10/12/2012	12GXAZ	60187636	As indicated

FILE DATE: 10/11/2012 2:15:18 PM

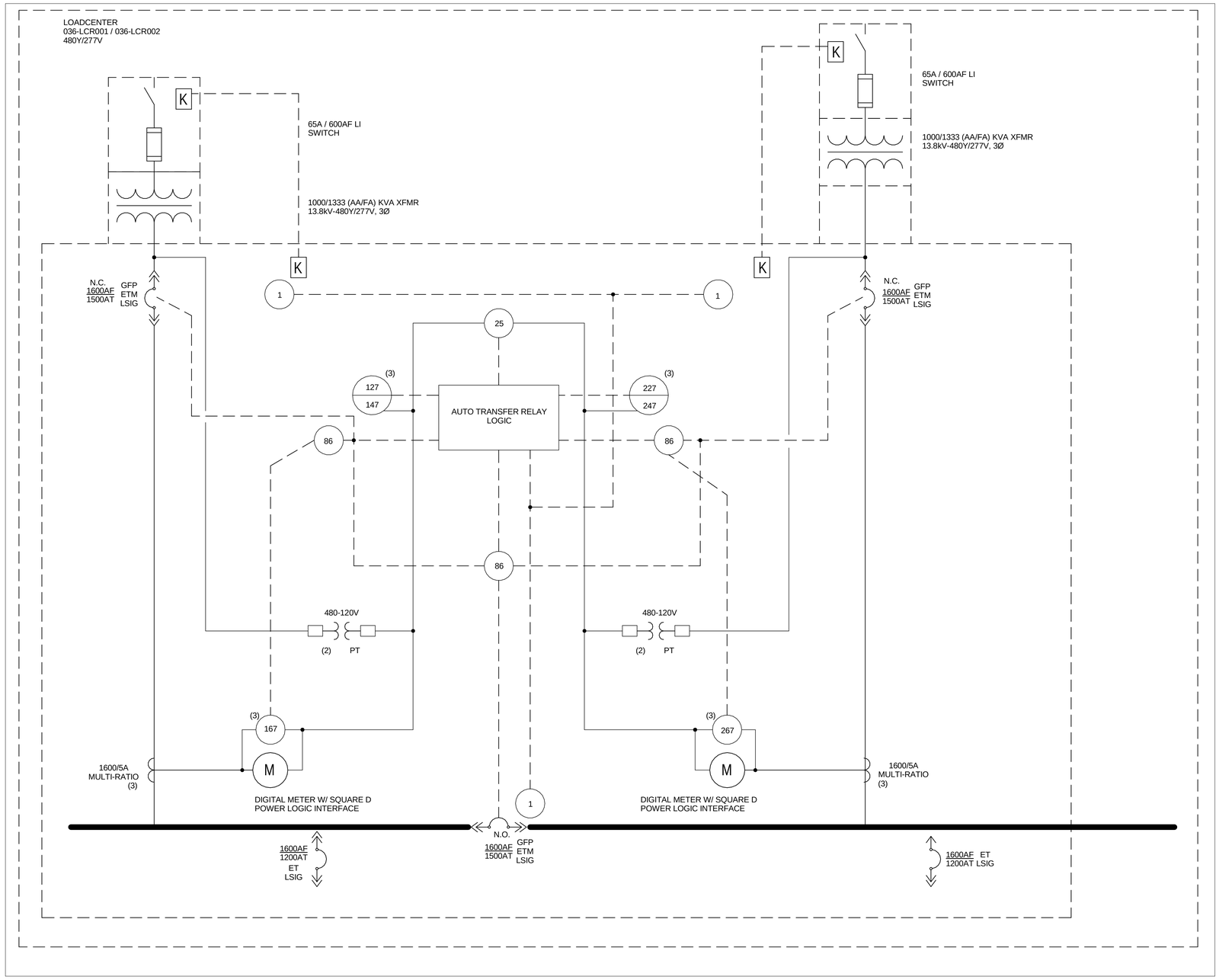

1 LOADCENTER PROTECTION RELAY DIAGRAM

1/4" = 1'-0"

NOTE: REFER TO SHEET E-002 FOR ADDITIONAL INFORMATION.

ELECTRICAL CONNECTION SCHEDULE

DESIGNATION	HP	KW	VOLTAGE	PHASE	CIRCUIT DESIGNATION	LOCATION	LOCAL DISCONNECT POLES	LOCAL DISCONNECT AMPS	LOCAL DISCONNECT FUSE	REMARKS
036-ACS001	20	--	460	3	036-PPH5B9 - 1,3,5	PENTHOUSE	--	--	--	VFD FURNISHED BY DIV. 23, INSTALLED BY DIV. 26.
036-ACS002	20	--	460	3	036-PPH5B9 - 2,4,6	PENTHOUSE	--	--	--	
036-AHU001	1.5	--	460	3	036-DPH1D4 - 7	LEVEL 1	--	--	--	STARTER / DISCONNECT FURNISHED BY DIV. 26.
036-FCU001	1/20	--	120	1	036-PPL1D4A - 1	LEVEL 1	--	--	--	STARTER / DISCONNECT FURNISHED BY DIV. 26.
036-FCU002	1/20	--	120	1	036-PPL2C4A - 2	LEVEL 2	--	--	--	STARTER / DISCONNECT FURNISHED BY DIV. 26.
036-FCU003	1/20	--	120	1	036-PPL3C4A - 1	LEVEL 3	--	--	--	STARTER / DISCONNECT FURNISHED BY DIV. 26.
036-FCU004	1/20	--	120	1	036-PPL4C4A - 1	LEVEL 4	--	--	--	STARTER / DISCONNECT FURNISHED BY DIV. 26.
036-FCU005	1/12	--	120	1	036-PPL1D4A - 2	LEVEL 1	--	--	--	STARTER / DISCONNECT FURNISHED BY DIV. 26.
036-FCU006	1/12	--	120	1	036-PPL2C4A - 1	LEVEL 2	--	--	--	STARTER / DISCONNECT FURNISHED BY DIV. 26.
036-FCU007	1/12	--	120	1	036-PPL3C4A - 2	LEVEL 3	--	--	--	STARTER / DISCONNECT FURNISHED BY DIV. 26.
036-FCU008	1/12	--	120	1	036-PPL4C4A - 2	LEVEL 4	--	--	--	STARTER / DISCONNECT FURNISHED BY DIV. 26.
036-FCU009	1/20	--	120	1	036-PPL1B15A - 1	LEVEL 1	--	--	--	STARTER / DISCONNECT FURNISHED BY DIV. 26.
036-FCU010	1/20	--	120	1	036-PPL2B15A - 1	LEVEL 2	--	--	--	STARTER / DISCONNECT FURNISHED BY DIV. 26.
036-FCU011	1/20	--	120	1	036-PPL3B15 - 1	LEVEL 3	--	--	--	STARTER / DISCONNECT FURNISHED BY DIV. 26.
036-FCU012	1/20	--	120	1	036-PPL4B15A - 2	LEVEL 4	--	--	--	STARTER / DISCONNECT FURNISHED BY DIV. 26.
036-FCU013	1/12	--	120	1	036-PPL1B15A - 2	LEVEL 1	--	--	--	STARTER / DISCONNECT FURNISHED BY DIV. 26.
036-FCU014	1/12	--	120	1	036-PPL2B15A - 2	LEVEL 2	--	--	--	STARTER / DISCONNECT FURNISHED BY DIV. 26.
036-FCU015	1/12	--	120	1	036-PPL3B15A - 2	LEVEL 3	--	--	--	STARTER / DISCONNECT FURNISHED BY DIV. 26.
036-FCU016	1/12	--	120	1	036-PPL4B15A - 1	LEVEL 4	--	--	--	STARTER / DISCONNECT FURNISHED BY DIV. 26.
036-FCU017	1/12	--	120	1	036-PPL1B15A - 3	LEVEL 1	--	--	--	STARTER / DISCONNECT FURNISHED BY DIV. 26.
036-FCU018	1/12	--	120	1	036-PPL2B15A - 3	LEVEL 2	--	--	--	STARTER / DISCONNECT FURNISHED BY DIV. 26.
036-FCU019	1/12	--	120	1	036-PPL3B15A - 4	LEVEL 3	--	--	--	STARTER / DISCONNECT FURNISHED BY DIV. 26.
036-FCU020	1/12	--	120	1	036-PPL4B15A - 4	LEVEL 4	--	--	--	STARTER / DISCONNECT FURNISHED BY DIV. 26.
036-FCU021	1/3	--	120	1	036-PPL5B9 - 11	PENTHOUSE	--	--	--	STARTER / DISCONNECT FURNISHED BY DIV. 26.
036-HWP001	15	--	460	3	036-PPH1A8B - 1,3,5	LEVEL 1	--	--	--	VFD FURNISHED BY DIV. 23, INSTALLED BY DIV. 26.
036-HWP002	15	--	460	3	036-PPH1A8B - 2,4,6	LEVEL 1	--	--	--	VFD FURNISHED BY DIV. 23, INSTALLED BY DIV. 26.
036-HWP003	15	--	460	3	036-PPH1A8A - 1,3,5	LEVEL 1	--	--	--	VFD FURNISHED BY DIV. 23, INSTALLED BY DIV. 26.
036-HWP004	15	--	460	3	036-PPH1A8B - 2,4,6	LEVEL 1	--	--	--	VFD FURNISHED BY DIV. 23, INSTALLED BY DIV. 26.
036-CWP001	25	--	460	3	036-PPH1A8A - 7,9,11	LEVEL 1	--	--	--	VFD FURNISHED BY DIV. 23, INSTALLED BY DIV. 26.
036-CWP002	25	--	460	3	036-PPH1A8A - 8,10,12	LEVEL 1	--	--	--	VFD FURNISHED BY DIV. 23, INSTALLED BY DIV. 26.
036-CWP003	15	--	460	3	036-PPH1A8A - 13,15,17	LEVEL 1	--	--	--	VFD FURNISHED BY DIV. 23, INSTALLED BY DIV. 26.
036-CWP004	15	--	460	3	036-PPH1A8A - 14,16,18	LEVEL 1	--	--	--	VFD FURNISHED BY DIV. 23, INSTALLED BY DIV. 26.
036-HUH001	1/15	--	115	1	036-PPL5B9 - 4	PENTHOUSE	--	--	--	PROVIDE MANUAL MOTOR STARTER.
036-HUH002	1/15	--	115	1	036-PPL5B9 - 3	PENTHOUSE	--	--	--	PROVIDE MANUAL MOTOR STARTER.
036-HUH003	1/15	--	115	1	036-PPL1D4A - 4	LEVEL 1	--	--	--	PROVIDE MANUAL MOTOR STARTER.
036-EXH001	3/4	--	460	3	036-PPH5B9 - 13,15,17	PENTHOUSE	--	--	--	STARTER / DISCONNECT FURNISHED BY DIV. 26.
036-EXH002	1/2	--	115	1	036-PPL5B9 - 2	PENTHOUSE	--	--	--	STARTER / DISCONNECT FURNISHED BY DIV. 26.
036-EXH003	1/2	--	115	1	036-PPL5B9 - 1	PENTHOUSE	--	--	--	STARTER / DISCONNECT FURNISHED BY DIV. 26.
036-SAF001	3	--	460	3	036-PPH1A8A - 19,21,23	LEVEL 1	--	--	--	STARTER / DISCONNECT FURNISHED BY DIV. 26.
036-CRP001 / 002	3	--	115	1	036-PPL1D4A - 3	LEVEL 1	--	--	--	--
036-CRP003 / 004	3	--	115	1	036-PPL1D4C - 24	LEVEL 1	--	--	--	--
036-SUP001	3	--	460	3	036-LPH1B15 - 12,14,16	LEVEL 1	--	--	--	PROVIDE NEMA 3R DISCONNECT BY DIV. 26.
ELEV1		--	480	3	036-PPH5B9 - 7,9,11	ELEV. MACHINE ROOM	--	--	--	PROVIDE BREAKER / DISCONNECT BY DIV. 26.
ELEV2		--	480	3	036-PPH5B9 - 8,10,12		--	--	--	PROVIDE BREAKER / DISCONNECT BY DIV. 26.

NOTE: COORDINATE FINAL MOUNTING LOCATIONS AND CLEARANCES WITH DIV. 23.

100% SUBMITTAL

AECOM
AECOM TECHNICAL SERVICES, INC.
3101 WILSON BOULEVARD
SUITE 900
ARLINGTON, VA 22201
T: 703-682-4900 F: 703.682.4901
www.aecom.com

SEAL AREA

STATE OF MARYLAND
JEEB-SIN
10-11-2012
No. 40964
PROFESSIONAL ENGINEER

KEY PLAN

REV	DATE	DESCRIPTION	S&R BR.	CUSTOMER	PM	SECT. HEAD

	INITIALS	DATE
DRAWN BY	LB/BF	
CHECKED BY	JR/MM	
A-E MANAGER	EW	
ENVIRONMENTAL BRANCH	JH	
SAFETY BRANCH	CS	
CM	MMD	
PM	RWP	
CUSTOMER	JWB	
ENG. BRANCH	DGL	

ELECTRICAL SCHEDULES

E-802

FLIGHT PROJECTS BUILDING

NATIONAL AERONAUTICS AND SPACE ADMINISTRATION
GODDARD SPACE FLIGHT CENTER GREENBELT, MARYLAND
FACILITIES MANAGEMENT DIVISION

DATE ISSUED	CoF CODE OR WR#	AECOM PROJECT NO.	SCALE
10/12/2012	12GXAZ	60187636	As indicated

FILE DATE: 10/11/2012 2:15:20 PM

036-SWB001

Location: ELEC ROOM N147 **Supply From:** LCR001/LCR002 **Mounting:** FLOOR **Enclosure:** NEMA 1
Volts: 480/277 Wye **Phases:** 3 **Wires:** 4
A.I.C. Rating: 65,000 **Mains Type:** MCB **Mains Rating:** 1200 A **MCB Rating:** 1200 A

Notes:

CKT	Circuit Description	# of Poles	Frame Size	Trip Rating	Load	Remarks
1	036-PPH1A8A	3	400 A	400 A	82 kVA	
2	036-PPH1A8B	3	400 A	250 A	25 kVA	
3	036-LPH1C4	3	400 A	250 A	58 kVA	
4	036-LPH2C4	3	400 A	250 A	97 kVA	
5	036-LPH3C4	3	400 A	250 A	75 kVA	
6	036-LPH4C4	3	400 A	250 A	79 kVA	
7	036-AHU001; SERVER RM N111A	3	30 A	30 A	1 kVA	
8	036-UPS001BPSS	3	70 A	70 A	19 kVA	
9	Spare	3	400 A	400 A	0 kVA	
10	Spare	3	400 A	400 A	0 kVA	
11	Spare	3	250 A	250 A	0 kVA	
12	Spare	3	250 A	250 A	0 kVA	
				Total Conn. Load:	437 kVA	
				Total Amps:	525 A	

Legend:

Load Classification	Connected Load	Demand Factor	Estimated Demand	Panel Totals	
Lighting	65 kVA	125.00%	82 kVA		
Lighting 2	2 kVA	125.00%	2 kVA	Total Conn. Load:	437 kVA
Other	263 kVA	100.00%	263 kVA	Total Est. Demand:	406 kVA
Power	1 kVA	100.00%	1 kVA	Total Conn.:	525 A
Receptacle	105 kVA	54.77%	57 kVA	Total Est. Demand:	488 A
Spare	1 kVA	100.00%	1 kVA		

Notes:

036-SWB002

Location: ELEC ROOM S147 **Supply From:** LCR001/LCR002 **Mounting:** FLOOR **Enclosure:** NEMA 1
Volts: 480/277 Wye **Phases:** 3 **Wires:** 4
A.I.C. Rating: 65,000 **Mains Type:** MCB **Mains Rating:** 1200 A **MCB Rating:** 1200 A

Notes:

CKT	Circuit Description	# of Poles	Frame Size	Trip Rating	Load	Remarks
1	036-LPH1B15	3	400 A	250 A	105 kVA	
2	036-LPH2B15	3	400 A	250 A	80 kVA	
3	036-LPH3B15	3	400 A	250 A	77 kVA	
4	036-LPH4B15	3	400 A	250 A	75 kVA	
5	036-PPH5B9	3	400 A	250 A	102 kVA	
6	SPARE	3	400 A	70 A	6 kVA	
7	Spare	3	400 A	400 A	0 kVA	
8	Spare	3	400 A	400 A	0 kVA	
9	Spare	3	250 A	250 A	0 kVA	
10	Spare	3	250 A	250 A	0 kVA	
11	Spare	3	250 A	250 A	0 kVA	
12	Spare	3	250 A	250 A	0 kVA	
				Total Conn. Load:	446 kVA	
				Total Amps:	536 A	

Legend:

Load Classification	Connected Load	Demand Factor	Estimated Demand	Panel Totals	
Lighting	50 kVA	125.00%	63 kVA		
Lighting 2	0 kVA	125.00%	0 kVA	Total Conn. Load:	446 kVA
Other	289 kVA	100.00%	289 kVA	Total Est. Demand:	418 kVA
Power	14 kVA	100.00%	14 kVA	Total Conn.:	536 A
Receptacle	92 kVA	55.44%	51 kVA	Total Est. Demand:	502 A
Spare	1 kVA	100.00%	1 kVA		

Notes:

Branch Panel: 036-ELPH1D4

Location: ELEC ROOM N147 **Supply From:** 036-UPS001BPSS **Mounting:** Surface **Enclosure:** NEMA 1
Volts: 480/277 Wye **Phases:** 3 **Wires:** 4
A.I.C. Rating: 45,000 **Mains Type:** MCB **Mains Rating:** 100 A **MCB Rating:** 100 A

Notes:

CKT	Circuit Description	Trip	Poles	A		B		C		Poles	Trip	Circuit Description	CKT
1	COORIDORS; N100, N130, N119, N140, C100B	20 A	1	1 kVA	1 kVA					1	20 A	CORRIDORS; S100, C115, S150, S119	2
3	GENERAL CORE; N100, N130	20 A	1			1 kVA	0 kVA			1	20 A	ELEVATOR PIT LIGHTS	4
5	GTD CONNECTIONS; SYMOPOSIUM, C210	20 A	1					1 kVA	1 kVA	1	20 A	GTD EXTERIOR LIGHTING	6
7	Spare	20 A	1	0 kVA	0 kVA					1	20 A	Spare	8
9	Spare	20 A	1			0 kVA	0 kVA			1	20 A	Spare	10
11	Spare	20 A	1					0 kVA	0 kVA	1	20 A	Spare	12
13	Spare	20 A	1	0 kVA	0 kVA					1	20 A	Spare	14
15	Spare	20 A	1			0 kVA	0 kVA			1	20 A	Spare	16
17	Spare	20 A	1					0 kVA	0 kVA	1	20 A	Spare	18
19	Spare	20 A	1	0 kVA	0 kVA					1	20 A	Spare	20
21	Spare	20 A	1			0 kVA	0 kVA			1	20 A	Spare	22
23	Spare	20 A	1					0 kVA	0 kVA	1	20 A	Spare	24
25	Spare	20 A	1	0 kVA	0 kVA					1	20 A	Spare	26
27	Spare	20 A	1			0 kVA	0 kVA			1	20 A	Spare	28
29	Spare	20 A	1					0 kVA	0 kVA	1	20 A	Spare	30
31	Spare	20 A	1	0 kVA	0 kVA					1	20 A	Spare	32
33	Spare	20 A	1			0 kVA	0 kVA			1	20 A	Spare	34
35	Spare	20 A	1					0 kVA	0 kVA	1	20 A	Spare	36
37	PANEL 036-ELPH2A4	60 A	3	8 kVA	0 kVA					1	20 A	Spare	38
39	--	--	--			5 kVA	0 kVA			1	20 A	Spare	40
41	--	--	--					1 kVA	0 kVA	1	20 A	Spare	42
			Total Load:	10 kVA		6 kVA		2 kVA					
			Total Amps:	37 A		23 A		8 A					

Legend:

Load Classification	Connected Load	Demand Factor	Estimated Demand	Panel Totals	
Lighting	16 kVA	125.00%	20 kVA		
Lighting 2	0 kVA	125.00%	1 kVA	Total Conn. Load:	19 kVA
Other	2 kVA	100.00%	2 kVA	Total Est. Demand:	23 kVA
Power	1 kVA	100.00%	1 kVA	Total Conn.:	23 A
				Total Est. Demand:	28 A

Notes:
FEED-THRU LUGS.

Branch Panel: 036-ELPH2D4

Location: ELEC ROOM N247 **Supply From:** 036-ELPH1D4 **Mounting:** Surface **Enclosure:** NEMA 1
Volts: 480/277 Wye **Phases:** 3 **Wires:** 4
A.I.C. Rating: 45,000 **Mains Type:** MCB **Mains Rating:** 100 A **MCB Rating:** 100 A

Notes:

CKT	Circuit Description	Trip	Poles	A		B		C		Poles	Trip	Circuit Description	CKT
1	CORRIDORS; N230, N200, N247, N219, N201,	20 A	1	1 kVA	1 kVA					1	20 A	CORRIDORS; S200, S230, S247, S219, S330,	2
3	CONF. ROOM; N207	20 A	1			1 kVA	1 kVA			1	20 A	LOBBY; C200-1, C210	4
5	Spare	20 A	1					0 kVA	0 kVA	1	20 A	Spare	6
7	Spare	20 A	1	0 kVA	0 kVA					1	20 A	Spare	8
9	Spare	20 A	1			0 kVA	0 kVA			1	20 A	Spare	10
11	Spare	20 A	1					0 kVA	0 kVA	1	20 A	Spare	12
13	Spare	20 A	1	0 kVA	0 kVA					1	20 A	Spare	14
15	Spare	20 A	1			0 kVA	0 kVA			1	20 A	Spare	16
17	Spare	20 A	1					0 kVA	0 kVA	1	20 A	Spare	18
19	Spare	20 A	1	0 kVA	0 kVA					1	20 A	Spare	20
21	Spare	20 A	1			0 kVA	0 kVA			1	20 A	Spare	22
23	Spare	20 A	1					0 kVA	0 kVA	1	20 A	Spare	24
25	Spare	20 A	1	0 kVA	0 kVA					1	20 A	Spare	26
27	Spare	20 A	1			0 kVA	0 kVA			1	20 A	Spare	28
29	Spare	20 A	1					0 kVA	0 kVA	1	20 A	Spare	30
31	Spare	20 A	1	0 kVA	0 kVA					1	20 A	Spare	32
33	Spare	20 A	1			0 kVA	0 kVA			1	20 A	Spare	34
35	Spare	20 A	1					0 kVA	0 kVA	1	20 A	Spare	36
37	PANEL 036-ELPH3D4	60 A	3	5 kVA	0 kVA					1	20 A	Spare	38
39	--	--	--			3 kVA	0 kVA			1	20 A	Spare	40
41	--	--	--					1 kVA	0 kVA	1	20 A	Spare	42
			Total Load:	8 kVA		5 kVA		1 kVA					
			Total Amps:	28 A		19 A		3 A					

Legend:

Load Classification	Connected Load	Demand Factor	Estimated Demand	Panel Totals	
Lighting	13 kVA	125.00%	16 kVA		
Lighting 2	0 kVA	125.00%	0 kVA	Total Conn. Load:	14 kVA
Other	1 kVA	100.00%	1 kVA	Total Est. Demand:	17 kVA
				Total Conn.:	16 A
				Total Est. Demand:	20 A

Notes:
FEED-THRU LUGS.

Branch Panel: 036-ELPH3D4

Location: ELEC ROOM N347 **Supply From:** 036-ELPH2D4 **Mounting:** Surface **Enclosure:** NEMA 1
Volts: 480/277 Wye **Phases:** 3 **Wires:** 4
A.I.C. Rating: 45,000 **Mains Type:** MCB **Mains Rating:** 100 A **MCB Rating:** 100 A

Notes:

CKT	Circuit Description	Trip	Poles	A		B		C		Poles	Trip	Circuit Description	CKT
1	CORRIDORS; N300, N347, N319, N400-1, N340	20 A	1	1 kVA	1 kVA					1	20 A	LOBBY; C300, C300B	2
3	CORRIDORS; S300, S330, S347, C315, S350,	20 A	1			1 kVA	0 kVA			1	20 A	Spare	4
5	Spare	20 A	1					0 kVA	0 kVA	1	20 A	Spare	6
7	Spare	20 A	1	0 kVA	0 kVA					1	20 A	Spare	8
9	Spare	20 A	1			0 kVA	0 kVA			1	20 A	Spare	10
11	Spare	20 A	1					0 kVA	0 kVA	1	20 A	Spare	12
13	Spare	20 A	1	0 kVA	0 kVA					1	20 A	Spare	14
15	Spare	20 A	1			0 kVA	0 kVA			1	20 A	Spare	16
17	Spare	20 A	1					0 kVA	0 kVA	1	20 A	Spare	18
19	Spare	20 A	1	0 kVA	0 kVA					1	20 A	Spare	20
21	Spare	20 A	1			0 kVA	0 kVA			1	20 A	Spare	22
23	Spare	20 A	1					0 kVA	0 kVA	1	20 A	Spare	24
25	Spare	20 A	1	0 kVA	0 kVA					1	20 A	Spare	26
27	Spare	20 A	1			0 kVA	0 kVA			1	20 A	Spare	28
29	Spare	20 A	1					0 kVA	0 kVA	1	20 A	Spare	30
31	Spare	20 A	1	0 kVA	0 kVA					1	20 A	Spare	32
33	Spare	20 A	1			0 kVA	0 kVA			1	20 A	Spare	34
35	Spare	20 A	1					0 kVA	0 kVA	1	20 A	Spare	36
37	PANEL 036-ELPH4D4	60 A	3	3 kVA	0 kVA					1	20 A	Spare	38
39	--	--	--			1 kVA	0 kVA			1	20 A	Spare	40
41	--	--	--					1 kVA	0 kVA	1	20 A	Spare	42
			Total Load:	5 kVA		3 kVA		1 kVA					
			Total Amps:	18 A		10 A		3 A					

Legend:

Load Classification	Connected Load	Demand Factor	Estimated Demand	Panel Totals	
Lighting	8 kVA	125.00%	10 kVA		
Lighting 2	0 kVA	125.00%	0 kVA	Total Conn. Load:	9 kVA
Other	1 kVA	100.00%	1 kVA	Total Est. Demand:	11 kVA
				Total Conn.:	10 A
				Total Est. Demand:	13 A

Notes:
FEED-THRU LUGS.

Branch Panel: 036-ELPH4D4

Location: ELEC ROOM N447 **Supply From:** 036-ELPH3D4 **Mounting:** Surface **Enclosure:** NEMA 1
Volts: 480/277 Wye **Phases:** 3 **Wires:** 4
A.I.C. Rating: 45,000 **Mains Type:** MCB **Mains Rating:** 100 A **MCB Rating:** 100 A

Notes:

CKT	Circuit Description	Trip	Poles	A		B		C		Poles	Trip	Circuit Description	CKT
1	CORRIDORS; N400-1, N447, N419, N403, N456,	20 A	1	1 kVA	1 kVA					1	20 A	CORRIDORS; S400, S430, C415, S419, S450,	2
3	LOBBY; C400, 384	20 A	1			1 kVA	1 kVA			1	20 A	PENTHOUSE LIGHTING	4
5	PENTHOUSE EGRESS LIGHTING	20 A	1					0 kVA	0 kVA	1	20 A	PENTHOUSE EGRESS LIGHTING	6
7	Spare	20 A	1	0 kVA	0 kVA					1	20 A	Spare	8
9	Spare	20 A	1			0 kVA	0 kVA			1	20 A	Spare	10
11	Spare	20 A	1					0 kVA	0 kVA	1	20 A	Spare	12
13	Spare	20 A	1	0 kVA	0 kVA					1	20 A	Spare	14
15	Spare	20 A	1			0 kVA	0 kVA			1	20 A	Spare	16
17	Spare	20 A	1					0 kVA	0 kVA	1	20 A	Spare	18
19	Spare	20 A	1	0 kVA	0 kVA					1	20 A	Spare	20
21	Spare	20 A	1			0 kVA	0 kVA			1	20 A	Spare	22
23	Spare	20 A	1					0 kVA	0 kVA	1	20 A	Spare	24
25	Spare	20 A	1	0 kVA	0 kVA					1	20 A	Spare	26
27	Spare	20 A	1			0 kVA	0 kVA			1	20 A	Spare	28
29	Spare	20 A	1					0 kVA	0 kVA	1	20 A	Spare	30
31	Spare	20 A	1	0 kVA	0 kVA					1	20 A	Spare	32
33	Spare	20 A	1			0 kVA	0 kVA			1	20 A	Spare	34
35	Spare	20 A	1					0 kVA	0 kVA	1	20 A	Spare	36
37	Spare	20 A	1	0 kVA	0 kVA					1	20 A	Spare	38
39	Spare	20 A	1			0 kVA	0 kVA			1	20 A	Spare	40
41	Spare	20 A	1					0 kVA	0 kVA	1	20 A	Spare	42
			Total Load:	3 kVA		1 kVA		1 kVA					
			Total Amps:	10 A		5 A		3 A					

Legend:

Load Classification	Connected Load	Demand Factor	Estimated Demand	Panel Totals	
Lighting	4 kVA	125.00%	6 kVA		
Lighting 2	0 kVA	125.00%	0 kVA	Total Conn. Load:	5 kVA
Other	1 kVA	100.00%	1 kVA	Total Est. Demand:	6 kVA
				Total Conn.:	6 A
				Total Est. Demand:	7 A

Notes:
FEED-THRU LUGS.

100% SUBMITTAL

AECOM
AECOM TECHNICAL SERVICES, INC.
3101 WILSON BOULEVARD
SUITE 900
ARLINGTON, VA 22201
T: 703-682-4900 F: 703.682.4901
www.aecom.com

SEAL AREA

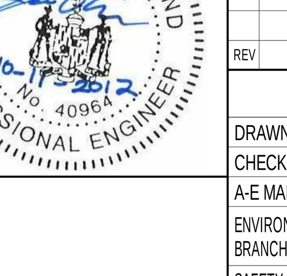

KEY PLAN

REV	DATE	DESCRIPTION	S&R BR.	CUSTOMER	PM	SECT. HEAD

	INITIALS	DATE
DRAWN BY	LB/BF	
CHECKED BY	JR/MM	
A-E MANAGER	EW	
ENVIRONMENTAL BRANCH	JH	
SAFETY BRANCH	CS	
CM	MMD	
PM	RWP	
CUSTOMER	JWB	
ENG. BRANCH	DGL	

ELECTRICAL PANEL SCHEDULES

E-900

FLIGHT PROJECTS BUILDING

NATIONAL AERONAUTICS AND SPACE ADMINISTRATION
GODDARD SPACE FLIGHT CENTER GREENBELT, MARYLAND
FACILITIES MANAGEMENT DIVISION

DATE ISSUED	CoF CODE OR WR#	AECOM PROJECT NO.	SCALE
10/12/2012	12GXAZ	60187636	

FILE DATE: 10/11/2012 2:15:21 PM

Branch Panel: 036-UPPL1B15

Location: TELECOM C115 **Volts:** 120/208 Wye **A.I.C. Rating:** 22,000
Supply From: 036-LVT011 **Phases:** 3 **Mains Type:** MCB
Mounting: Surface **Wires:** 4 **Mains Rating:** 150 A
Enclosure: NEMA 1 **MCB Rating:** 150 A

Notes:

CKT	Circuit Description	Trip	Poles	A		B		C		Poles	Trip	Circuit Description	CKT
1	GENERAL, TELECOM; C115	20 A	1	0 kVA	0 kVA					1	20 A	GENERAL, TELECOM; C115	2
3	GENERAL, TELECOM; C115	20 A	2			0 kVA	0 kVA			2	20 A	GENERAL, TELECOM; C115	4
5	--	--	--					0 kVA	0 kVA	--	--	--	6
7	GENERAL, TELECOM; C215	20 A	1	0 kVA	0 kVA					1	20 A	GENERAL, TELECOM; C215	8
9	GENERAL, TELECOM; C215	20 A	2			0 kVA	0 kVA			2	20 A	GENERAL, TELECOM; C215	10
11	--	--	--					0 kVA	0 kVA	--	--	--	12
13	GENERAL, TELECOM; C315	20 A	1	0 kVA	0 kVA					1	20 A	GENERAL, TELECOM; C315	14
15	GENERAL, TELECOM; C315	20 A	2			0 kVA	0 kVA			2	20 A	GENERAL, TELECOM; C315	16
17	--	--	--					0 kVA	0 kVA	--	--	--	18
19	GENERAL, TELECOM; C415	20 A	1	0 kVA	0 kVA					1	20 A	GENERAL, TELECOM; C415	20
21	GENERAL, TELECOM; C415	20 A	2			0 kVA	0 kVA			2	20 A	GENERAL, TELECOM; C415	22
23	--	--	--					0 kVA	0 kVA	--	--	--	24
25	GENERAL, SERVER RM; N111A	20 A	1	0 kVA	0 kVA					1	20 A	GENERAL, SERVER RM; N111A	26
27	GENERAL, SERVER RM; N111A	20 A	2			0 kVA	0 kVA			2	20 A	GENERAL, SERVER RM; N111A	28
29	--	--	--					0 kVA	0 kVA	--	--	--	30
31	Spare	20 A	1	0 kVA	0 kVA					1	20 A	Spare	32
33	Spare	20 A	1			0 kVA	0 kVA			1	20 A	Spare	34
35	Spare	20 A	1					0 kVA	0 kVA	1	20 A	Spare	36
37	PANEL 036-EPPL1B15B	60 A	3	0 kVA	0 kVA					1	20 A	Spare	38
39	--	--	--			0 kVA	0 kVA			1	20 A	Spare	40
41	--	--	--					0 kVA	0 kVA	1	20 A	Spare	42
			Total Load:	3 kVA		2 kVA		2 kVA					
			Total Amps:	24 A		14 A		14 A					

Legend:

Load Classification	Connected Load	Demand Factor	Estimated Demand	Panel Totals	
Other	6 kVA	100.00%	6 kVA		
				Total Conn. Load:	6 kVA
				Total Est. Demand:	6 kVA
				Total Conn. Current:	17 A
				Total Est. Demand Current:	17 A

Notes:

Branch Panel: 036-UPPL1B15

Location: TELECOM C115 **Volts:** 120/208 Wye **A.I.C. Rating:** 22,000
Supply From: 036-UPPL1B15A **Phases:** 3 **Mains Type:** MLO
Mounting: Surface **Wires:** 4 **Mains Rating:** 150 A
Enclosure: NEMA 1 **MCB Rating:** N/A

Notes:

CKT	Circuit Description	Trip	Poles	A		B		C		Poles	Trip	Circuit Description	CKT
1	Spare	20 A	1	0 kVA	0 kVA					1	20 A	Spare	2
3	Spare	20 A	1			0 kVA	0 kVA			1	20 A	Spare	4
5	Spare	20 A	1					0 kVA	0 kVA	1	20 A	Spare	6
7	Spare	20 A	1	0 kVA	0 kVA					1	20 A	Spare	8
9	Spare	20 A	1			0 kVA	0 kVA			1	20 A	Spare	10
11	Spare	20 A	1					0 kVA	0 kVA	1	20 A	Spare	12
13	Spare	20 A	1	0 kVA	0 kVA					1	20 A	Spare	14
15	Spare	20 A	1			0 kVA	0 kVA			1	20 A	Spare	16
17	Spare	20 A	1					0 kVA	0 kVA	1	20 A	Spare	18
19	Spare	20 A	1	0 kVA	0 kVA					1	20 A	Spare	20
21	Spare	20 A	1			0 kVA	0 kVA			1	20 A	Spare	22
23	Spare	20 A	1					0 kVA	0 kVA	1	20 A	Spare	24
25	Spare	20 A	1	0 kVA	0 kVA					1	20 A	Spare	26
27	Spare	20 A	1			0 kVA	0 kVA			1	20 A	Spare	28
29	Spare	20 A	1					0 kVA	0 kVA	1	20 A	Spare	30
31	Spare	20 A	1	0 kVA	0 kVA					1	20 A	Spare	32
33	Spare	20 A	1			0 kVA	0 kVA			1	20 A	Spare	34
35	Spare	20 A	1					0 kVA	0 kVA	1	20 A	Spare	36
37	Spare	20 A	1	0 kVA	0 kVA					1	20 A	Spare	38
39	Spare	20 A	1			0 kVA	0 kVA			1	20 A	Spare	40
41	Spare	20 A	1					0 kVA	0 kVA	1	20 A	Spare	42
			Total Load:	0 kVA		0 kVA		0 kVA					
			Total Amps:	0 A		0 A		0 A					

Legend:

Load Classification	Connected Load	Demand Factor	Estimated Demand	Panel Totals	
				Total Conn. Load:	0 kVA
				Total Est. Demand:	0 kVA
				Total Conn. Current:	0 A
				Total Est. Demand Current:	0 A

Notes:

Branch Panel: 036-PPH1A8A

Location: SWITCHGEAR/ ELECTRICAL **Volts:** 480/277 Wye **A.I.C. Rating:** 45,000
Supply From: 036-SWB001 **Phases:** 3 **Mains Type:** MCB
Mounting: Surface **Wires:** 4 **Mains Rating:** 400 A
Enclosure: NEMA 1 **MCB Rating:** 400 A

Notes:

CKT	Circuit Description	Trip	Poles	A		B		C		Poles	Trip	Circuit Description	CKT
1	HWP003; MECH PUMP ROOM C111	40 A	3	4 kVA	4 kVA					3	40 A	HWP004; MECH PUMP ROOM C111	2
3	--	--	--			4 kVA	4 kVA			--	--	--	4
5	--	--	--					4 kVA	4 kVA	--	--	--	6
7	CWP001; MECH PUMP ROOM C111	60 A	3	5 kVA	5 kVA					3	60 A	CWP002; MECH PUMP ROOM C111	8
9	--	--	--			5 kVA	5 kVA			--	--	--	10
11	--	--	--					5 kVA	5 kVA	--	--	--	12
13	CWP003; MECH PUMP ROOM C111	40 A	3	4 kVA	4 kVA					3	40 A	CWP004; MECH PUMP ROOM C111	14
15	--	--	--			4 kVA	4 kVA			--	--	--	16
17	--	--	--					4 kVA	4 kVA	--	--	--	18
19	SAF001; MECH PUMP ROOM C111	20 A	3	1 kVA	0 kVA					1	20 A	Spare	20
21	--	--	--			1 kVA	0 kVA			1	20 A	Spare	22
23	--	--	--					1 kVA	0 kVA	1	20 A	Spare	24
25	Spare	20 A	1	0 kVA	0 kVA					1	20 A	Spare	26
27	Spare	20 A	1			0 kVA	0 kVA			1	20 A	Spare	28
29	Spare	20 A	1					0 kVA	0 kVA	1	20 A	Spare	30
31	Spare	20 A	1	0 kVA	0 kVA					1	20 A	Spare	32
33	Spare	20 A	1			0 kVA	0 kVA			1	20 A	Spare	34
35	Spare	20 A	1					0 kVA	0 kVA	1	20 A	Spare	36
37	Spare	20 A	1	0 kVA	0 kVA					1	20 A	Spare	38
39	Spare	20 A	1			0 kVA	0 kVA			1	20 A	Spare	40
41	Spare	20 A	1					0 kVA	0 kVA	1	20 A	Spare	42
			Total Load:	27 kVA		27 kVA		27 kVA					
			Total Amps:	99 A		99 A		99 A					

Legend:

Load Classification	Connected Load	Demand Factor	Estimated Demand	Panel Totals	
Other	82 kVA	100.00%	82 kVA		
				Total Conn. Load:	82 kVA
				Total Est. Demand:	82 kVA
				Total Conn.:	99 A
				Total Est. Demand:	99 A

Notes:

Branch Panel: 036-PPH5B9

Location: PENTHOUSE C500 **Volts:** 480/277 Wye **A.I.C. Rating:** 45,000
Supply From: 036-SWB002 **Phases:** 3 **Mains Type:** MCB
Mounting: Surface **Wires:** 4 **Mains Rating:** 600 A
Enclosure: NEMA 1 **MCB Rating:** 600 A

Notes:

CKT	Circuit Description	Trip	Poles	A		B		C		Poles	Trip	Circuit Description	CKT
1	036-ACS001	125 A	3	15 kVA	15 kVA					3	125 A	036-ACS002	2
3	--	--	--			15 kVA	15 kVA			--	--	--	4
5	--	--	--					15 kVA	15 kVA	--	--	--	6
7	ELEV. DISCONNECT	200 A	3	0 kVA	0 kVA					3	200 A	ELEV. DISCONNECT	8
9	--	--	--			0 kVA	0 kVA			--	--	--	10
11	--	--	--					0 kVA	0 kVA	--	--	--	12
13	036-EXH001	20 A	3	0 kVA	0 kVA					1	20 A	Spare	14
15	--	--	--			0 kVA	0 kVA			1	20 A	Spare	16
17	--	--	--					0 kVA	0 kVA	1	20 A	Spare	18
19	Spare	20 A	1	0 kVA	0 kVA					1	20 A	Spare	20
21	Spare	20 A	1			0 kVA	0 kVA			1	20 A	Spare	22
23	Spare	20 A	1					0 kVA	0 kVA	1	20 A	Spare	24
25	Spare	20 A	1	0 kVA	0 kVA					1	20 A	Spare	26
27	Spare	20 A	1			0 kVA	0 kVA			1	20 A	Spare	28
29	Spare	20 A	1					0 kVA	0 kVA	1	20 A	Spare	30
31	Spare	20 A	1	0 kVA	0 kVA					1	20 A	Spare	32
33	Spare	20 A	1			0 kVA	0 kVA			1	20 A	Spare	34
35	Spare	20 A	1					0 kVA	0 kVA	1	20 A	Spare	36
37	PANEL 036-PPL5B9 VIA 036-LVT009	45 A	3	3 kVA	0 kVA					1	20 A	Spare	38
39	--	--	--			4 kVA	0 kVA			1	20 A	Spare	40
41	--	--	--					2 kVA	0 kVA	1	20 A	Spare	42
			Total Load:	34 kVA		35 kVA		33 kVA					
			Total Amps:	124 A		126 A		120 A					

Legend:

Load Classification	Connected Load	Demand Factor	Estimated Demand	Panel Totals	
Other	99 kVA	100.00%	99 kVA		
				Total Conn. Load:	102 kVA
				Total Est. Demand:	102 kVA
				Total Conn. Current:	123 A
				Total Est. Demand Current:	123 A

Notes:

Branch Panel: 036-LPH1B15

Location: ELEC ROOM S147 **Volts:** 480/277 Wye **A.I.C. Rating:** 45,000
Supply From: 036-SWB002 **Phases:** 3 **Mains Type:** MCB
Mounting: Surface **Wires:** 4 **Mains Rating:** 250 A
Enclosure: NEMA 1 **MCB Rating:** 250 A

Notes:

CKT	Circuit Description	Trip	Poles	A		B		C		Poles	Trip	Circuit Description	CKT
1	OFFICES; S130A, S130B, S130C, S130D, S130E,	20 A	1	2 kVA	1 kVA					1	20 A	OFFICES; S102, S104, S106, S120	2
3	OFFICES; S156, S154, S158, S150	20 A	1			1 kVA	2 kVA			1	20 A	CORE SPACES; S119, S147, S109, S111, S113,	4
5	CONF. ROOM; S107	20 A	1					1 kVA	1 kVA	1	20 A	CORRIDORS; S430K, S100	6
7	SMALL CONF. ROOM; S141	20 A	1	0 kVA	2 kVA					1	20 A	LOBBY CORE; C100	8
9	SMALL CONF. ROOM; S123	20 A	1			0 kVA	3 kVA			1	20 A	LOBBY; C200-1, C200B	10
11	LOBBY; C300, C300B	20 A	1					2 kVA	0 kVA	3	20 A	SUP001; ELEV. PIT	12
13	LOBBY; C400, C400B, C401	20 A	1	3 kVA	0 kVA					--	--	--	14
15	TRASH COMPACTOR	20 A	3			2 kVA	0 kVA			--	--	--	16
17	--	--	--					2 kVA	2 kVA	3	20 A	TRASH COMPACTOR	18
19	--	--	--	2 kVA	2 kVA					--	--	--	20
21	SITE LIGHTING	20 A	2			0 kVA	2 kVA			--	--	--	22
23	--	--	--					0 kVA	1 kVA	1	20 A	SITE LIGHTING	24
25	SITE LIGHTING	20 A	1	1 kVA	0 kVA					1	20 A	Spare	26
27	Spare	20 A	1			0 kVA	1 kVA			1	20 A	SITE LIGHTING CONTROLS	28
29	SITE LIGHTING	20 A	2					0 kVA	0 kVA	2	20 A	SITE LIGHTING	30
31	--	--	--	0 kVA	0 kVA					--	--	--	32
33	SITE LIGHTING	20 A	2			0 kVA	0 kVA			1	20 A	EXTERIOR LIGHTING	34
35	--	--	--					0 kVA	0 kVA	1	20 A	Spare	36
37	PANEL 036-PPL1B15A VIA 036-LVT002	110 A	3	26 kVA	0 kVA					1	20 A	Spare	38
39	--	--	--			22 kVA	0 kVA			1	20 A	Spare	40
41	--	--	--					21 kVA	0 kVA	1	20 A	Spare	42
			Total Load:	39 kVA		34 kVA		32 kVA					
			Total Amps:	142 A		122 A		114 A					

Legend:

Load Classification	Connected Load	Demand Factor	Estimated Demand	Panel Totals	
Lighting	20 kVA	125.00%	25 kVA		
Lighting 2	0 kVA	125.00%	0 kVA	**Total Conn. Load:**	105 kVA
Other	48 kVA	100.00%	48 kVA	**Total Est. Demand:**	103 kVA
Power	14 kVA	100.00%	14 kVA	**Total Conn.:**	126 A
Receptacle	23 kVA	71.42%	17 kVA	**Total Est. Demand:**	124 A

Notes:

Branch Panel: 036-LPH1C4

Location: ELEC ROOM N147 **Volts:** 480/277 Wye **A.I.C. Rating:** 45,000
Supply From: 036-SWB001 **Phases:** 3 **Mains Type:** MCB
Mounting: Surface **Wires:** 4 **Mains Rating:** 250 A
Enclosure: NEMA 1 **MCB Rating:** 250 A

Notes:

CKT	Circuit Description	Trip	Poles	A		B		C		Poles	Trip	Circuit Description	CKT
1	OFFICES; N130I, N130H, N130D, N130E, N130F	20 A	1	1 kVA	1 kVA					1	20 A	OFFICES; N106, N108, N104, N112, N114, N116,	2
3	OFFICES; N158, N156, N154, N150, N148, N146,	20 A	1			1 kVA	0 kVA			1	20 A	CORRIDORS; N100, N130, C100B	4
5	PRODUCTION ROOM: N130J	20 A	1					1 kVA	1 kVA	1	20 A	CORE SPACES; N149, N151, N109, N111, N111A,	6
7	CONF. ROOM; N107	20 A	1	2 kVA	2 kVA					1	20 A	LOBBY CORE; C108, C107, C105, C104, C106,	8
9	Spare	20 A	1			0 kVA	0 kVA			1	20 A	Spare	10
11	Spare	20 A	1					0 kVA	0 kVA	1	20 A	Spare	12
13	Spare	20 A	1	0 kVA	0 kVA					1	20 A	Spare	14
15	Spare	20 A	1			0 kVA	0 kVA			1	20 A	Spare	16
17	Spare	20 A	1					0 kVA	0 kVA	1	20 A	Spare	18
19	Spare	20 A	1	0 kVA	0 kVA					1	20 A	Spare	20
21	Spare	20 A	1			0 kVA	0 kVA			1	20 A	Spare	22
23	Spare	20 A	1					0 kVA	0 kVA	1	20 A	Spare	24
25	Spare	20 A	1	0 kVA	0 kVA					1	20 A	Spare	26
27	Spare	20 A	1			0 kVA	0 kVA			1	20 A	Spare	28
29	Spare	20 A	1					0 kVA	0 kVA	1	20 A	Spare	30
31	Spare	20 A	1	0 kVA	0 kVA					1	20 A	Spare	32
33	Spare	20 A	1			0 kVA	0 kVA			1	20 A	Spare	34
35	Spare	20 A	1					0 kVA	0 kVA	1	20 A	Spare	36
37	PANEL 036-PPL1D4A VIA 036-LVT001	110 A	3	16 kVA	0 kVA					1	20 A	Spare	38
39	--	--	--			15 kVA	0 kVA			1	20 A	Spare	40
41	--	--	--					17 kVA	0 kVA	1	20 A	Spare	42
			Total Load:	23 kVA		16 kVA		19 kVA					
			Total Amps:	83 A		59 A		68 A					

Legend:

Load Classification	Connected Load	Demand Factor	Estimated Demand	Panel Totals	
Lighting	9 kVA	125.00%	12 kVA		
Lighting 2	1 kVA	125.00%	1 kVA	**Total Conn. Load:**	58 kVA
Other	15 kVA	100.00%	15 kVA	**Total Est. Demand:**	49 kVA
Receptacle	32 kVA	65.43%	21 kVA	**Total Conn.:**	70 A
				Total Est. Demand:	59 A

Notes:

100% SUBMITTAL

AECOM

AECOM TECHNICAL SERVICES, INC.
3101 WILSON BOULEVARD
SUITE 900
ARLINGTON, VA 22201

T: 703-682-4900 F: 703.682.4901
www.aecom.com

SEAL AREA

STATE OF MARYLAND · JIEER REN · No. 40964 · PROFESSIONAL ENGINEER · 10-11-2012

KEY PLAN

REV	DATE	DESCRIPTION	S&R BR.	CUSTOMER	PM	SECT. HEAD

	INITIALS	DATE
DRAWN BY	LB/BF	
CHECKED BY	JR/MM	
A-E MANAGER	EW	
ENVIRONMENTAL BRANCH	JH	
SAFETY BRANCH	CS	
CM	MMD	
PM	RWP	
CUSTOMER	JWB	
ENG. BRANCH	DGL	

ELECTRICAL PANEL SCHEDULES

E-901

FLIGHT PROJECTS BUILDING

NATIONAL AERONAUTICS AND SPACE ADMINISTRATION
GODDARD SPACE FLIGHT CENTER GREENBELT, MARYLAND
FACILITIES MANAGEMENT DIVISION

DATE ISSUED	CoF CODE OR WR#	AECOM PROJECT NO.	SCALE
10/12/2012	12GXAZ	60187636	

FILE DATE: 10/11/2012 2:15:22 PM

Branch Panel: 036-LPH2B15

Location: ELEC ROOM S247 **Supply From:** 036-SWB002 **Mounting:** Surface **Enclosure:** NEMA 1
Volts: 480/277 Wye **Phases:** 3 **Wires:** 4
A.I.C. Rating: 45,000 **Mains Type:** MCB **Mains Rating:** 250 A **MCB Rating:** 250 A

Notes:

CKT	Circuit Description	Trip	Poles	A		B		C		Poles	Trip	Circuit Description	CKT
1	OFFICES; S202, S204, S206, S220	20 A	1	1 kVA	1 kVA					1	20 A	OFFICES; S230A, S230B, S230C, S230D, S230E,	2
3	OFFICES; S256, S254, S258, S250	20 A	1			1 kVA	1 kVA			1	20 A	CORRIDORS; S203, S200, S230	4
5	SMALL CONF. ROOMS; S223, S241	20 A	1					1 kVA	2 kVA	1	20 A	CORE SPACES; S219, S247, S209, S211, S213,	6
7	CONF. ROOM; S207	20 A	1	1 kVA	0 kVA					1	20 A	Spare	8
9	Spare	20 A	1			0 kVA	0 kVA			1	20 A	Spare	10
11	Spare	20 A	1					0 kVA	0 kVA	1	20 A	Spare	12
13	Spare	20 A	1	0 kVA	0 kVA					1	20 A	Spare	14
15	Spare	20 A	1			0 kVA	0 kVA			1	20 A	Spare	16
17	Spare	20 A	1					0 kVA	0 kVA	1	20 A	Spare	18
19	Spare	20 A	1	0 kVA	0 kVA					1	20 A	Spare	20
21	Spare	20 A	1			0 kVA	0 kVA			1	20 A	Spare	22
23	Spare	20 A	1					0 kVA	0 kVA	1	20 A	Spare	24
25	Spare	20 A	1	0 kVA	0 kVA					1	20 A	Spare	26
27	Spare	20 A	1			0 kVA	0 kVA			1	20 A	Spare	28
29	Spare	20 A	1					0 kVA	0 kVA	1	20 A	Spare	30
31	Spare	20 A	1	0 kVA	0 kVA					1	20 A	Spare	32
33	Spare	20 A	1			0 kVA	0 kVA			1	20 A	Spare	34
35	Spare	20 A	1					0 kVA	0 kVA	1	20 A	Spare	36
37	PANEL 036-PPL2B15A VIA 036-LVT004	110 A	3	22 kVA	0 kVA					1	20 A	Spare	38
39	--	--	--			24 kVA	0 kVA			1	20 A	Spare	40
41	--	--	--					25 kVA	0 kVA	1	20 A	Spare	42
			Total Load:	26 kVA		27 kVA		28 kVA					
			Total Amps:	95 A		96 A		99 A					

Legend:

Load Classification	Connected Load	Demand Factor	Estimated Demand	Panel Totals	
Lighting	10 kVA	125.00%	12 kVA		
Lighting 2	0 kVA	125.00%	0 kVA	**Total Conn. Load:**	80 kVA
Other	48 kVA	100.00%	48 kVA	**Total Est. Demand:**	77 kVA
Receptacle	22 kVA	72.40%	16 kVA	**Total Conn.:**	97 A
				Total Est. Demand:	92 A

Notes:

Branch Panel: 036-LPH2C4

Location: ELEC ROOM N247 **Supply From:** 036-SWB001 **Mounting:** Surface **Enclosure:** NEMA 1
Volts: 480/277 Wye **Phases:** 3 **Wires:** 4
A.I.C. Rating: 45,000 **Mains Type:** MCB **Mains Rating:** 250 A **MCB Rating:** 250 A

Notes:

CKT	Circuit Description	Trip	Poles	A		B		C		Poles	Trip	Circuit Description	CKT
1	OFFICES; N230A, N230B, N230C, N230D, N230E,	20 A	1	1 kVA	1 kVA					1	20 A	OFFICES; N202, N204, N206, N220	2
3	OFFICES; N258, N256, N254, N250	20 A	1			1 kVA	2 kVA			1	20 A	SMALL CONF. ROOMS; N223, N241	4
5	CORE SPACES; N249, N251, N211, N209, N213,	20 A	1					1 kVA	3 kVA	1	20 A	SYMOPOSIUM; C210	6
7	LOBBY CORE; C205, C204, C200B, C206, C208,	20 A	1	3 kVA									8
9	CORRIDORS; N201	20 A	1			1 kVA							10
11	Spare	20 A	1					0 kVA	0 kVA	1	20 A	Spare	12
13	Spare	20 A	1	0 kVA	0 kVA					1	20 A	Spare	14
15	Spare	20 A	1			0 kVA	0 kVA			1	20 A	Spare	16
17	Spare	20 A	1					0 kVA	0 kVA	1	20 A	Spare	18
19	Spare	20 A	1	0 kVA	0 kVA					1	20 A	Spare	20
21	Spare	20 A	1			0 kVA	0 kVA			1	20 A	Spare	22
23	Spare	20 A	1					0 kVA	0 kVA	1	20 A	Spare	24
25	Spare	20 A	1	0 kVA	0 kVA					1	20 A	Spare	26
27	Spare	20 A	1			0 kVA	0 kVA			1	20 A	Spare	28
29	Spare	20 A	1					0 kVA	0 kVA	1	20 A	Spare	30
31	Spare	20 A	1	0 kVA	0 kVA					1	20 A	Spare	32
33	Spare	20 A	1			0 kVA	0 kVA			1	20 A	Spare	34
35	Spare	20 A	1					0 kVA	0 kVA	1	20 A	Spare	36
37	PANEL 036-PPL2C4A VIA 036-LVT003	110 A	3	16 kVA	13 kVA					3	60 A	PANEL 036-PPL2C4C VIA 036-LVT012	38
39	--	--	--			18 kVA	11 kVA			--	--	--	40
41	--	--	--					16 kVA	9 kVA	--	--	--	42
			Total Load:	34 kVA		34 kVA		29 kVA					
			Total Amps:	124 A		121 A		105 A					

Legend:

Load Classification	Connected Load	Demand Factor	Estimated Demand	Panel Totals	
Lighting	14 kVA	125.00%	18 kVA		
Lighting 2	0 kVA	125.00%	0 kVA	**Total Conn. Load:**	97 kVA
Other	54 kVA	100.00%	54 kVA	**Total Est. Demand:**	91 kVA
Receptacle	29 kVA	67.33%	19 kVA	**Total Conn.:**	116 A
				Total Est. Demand:	109 A

Notes:

Branch Panel: 036-LPH3B15

Location: ELEC RM S347 **Supply From:** 036-SWB002 **Mounting:** Surface **Enclosure:** NEMA 1
Volts: 480/277 Wye **Phases:** 3 **Wires:** 4
A.I.C. Rating: 45,000 **Mains Type:** MCB **Mains Rating:** 250 A **MCB Rating:** 250 A

Notes:

CKT	Circuit Description	Trip	Poles	A		B		C		Poles	Trip	Circuit Description	CKT
1	OFFICES; S302, S304, S306, S320	20 A	1	1 kVA	1 kVA					1	20 A	OFFICES; S330A, S330B, S330C, S330D, S330E,	2
3	OFFICES; S356, S354, S358, S350	20 A	1			1 kVA	2 kVA			1	20 A	CORE SPACES; S319, S347, S309, S311, S313,	4
5	CONF. ROOM; S307	20 A	1					1 kVA	1 kVA	1	20 A	SMALL CONF. ROOMS; S341, S323	6
7	CORRIDORS; S303, S300, C315, S330, S403	20 A	1	1 kVA	0 kVA					1	20 A	Spare	8
9	Spare	20 A	1			0 kVA	0 kVA			1	20 A	Spare	10
11	Spare	20 A	1					0 kVA	0 kVA	1	20 A	Spare	12
13	Spare	20 A	1	0 kVA	0 kVA					1	20 A	Spare	14
15	Spare	20 A	1			0 kVA	0 kVA			1	20 A	Spare	16
17	Spare	20 A	1					0 kVA	0 kVA	1	20 A	Spare	18
19	Spare	20 A	1	0 kVA	0 kVA					1	20 A	Spare	20
21	Spare	20 A	1			0 kVA	0 kVA			1	20 A	Spare	22
23	Spare	20 A	1					0 kVA	0 kVA	1	20 A	Spare	24
25	Spare	20 A	1	0 kVA	0 kVA					1	20 A	Spare	26
27	Spare	20 A	1			0 kVA	0 kVA			1	20 A	Spare	28
29	Spare	20 A	1					0 kVA	0 kVA	1	20 A	Spare	30
31	Spare	20 A	1	0 kVA	0 kVA					1	20 A	Spare	32
33	Spare	20 A	1			0 kVA	0 kVA			1	20 A	Spare	34
35	Spare	20 A	1					0 kVA	0 kVA	1	20 A	Spare	36
37	PANEL 036-PPL3B15A VIA 036-LVT006	110 A	3	22 kVA	0 kVA					1	20 A	Spare	38
39	--	--	--			23 kVA	0 kVA			1	20 A	Spare	40
41	--	--	--					22 kVA	0 kVA	1	20 A	Spare	42
			Total Load:	27 kVA		26 kVA		24 kVA					
			Total Amps:	96 A		95 A		87 A					

Legend:

Load Classification	Connected Load	Demand Factor	Estimated Demand	Panel Totals	
Lighting	10 kVA	125.00%	12 kVA		
Lighting 2	0 kVA	125.00%	0 kVA	**Total Conn. Load:**	77 kVA
Other	44 kVA	100.00%	44 kVA	**Total Est. Demand:**	73 kVA
Receptacle	23 kVA	71.48%	17 kVA	**Total Conn.:**	93 A
				Total Est. Demand:	88 A

Notes:

Branch Panel: 036-LPH3C4

Location: ELEC ROOM N347 **Supply From:** 036-SWB001 **Mounting:** Surface **Enclosure:** NEMA 1
Volts: 480/277 Wye **Phases:** 3 **Wires:** 4
A.I.C. Rating: 45,000 **Mains Type:** MCB **Mains Rating:** 250 A **MCB Rating:** 250 A

Notes:

CKT	Circuit Description	Trip	Poles	A		B		C		Poles	Trip	Circuit Description	CKT
1	OFFICES; N320, N340, N300, N327-1	20 A	1	1 kVA	1 kVA					1	20 A	OFFICES; N320	2
3	OFFICES; N350	20 A	1			1 kVA	1 kVA			1	20 A	SMALL CONF. ROOMS; N341, N323	4
5	CONF. ROOM; N307	20 A	1					1 kVA	2 kVA	1	20 A	CORE SPACES; N349, N351, N311, N309, N313,	6
7	CORRIDORS; N300, N303, N403	20 A	1	1 kVA	2 kVA					1	20 A	LOBBY CORE; C308, C305, C304, C307, C303,	8
9	Spare	20 A	1			0 kVA	0 kVA			1	20 A	Spare	10
11	Spare	20 A	1					0 kVA	0 kVA	1	20 A	Spare	12
13	Spare	20 A	1	0 kVA	0 kVA					1	20 A	Spare	14
15	Spare	20 A	1			0 kVA	0 kVA			1	20 A	Spare	16
17	Spare	20 A	1					0 kVA	0 kVA	1	20 A	Spare	18
19	Spare	20 A	1	0 kVA	0 kVA					1	20 A	Spare	20
21	Spare	20 A	1			0 kVA	0 kVA			1	20 A	Spare	22
23	Spare	20 A	1					0 kVA	0 kVA	1	20 A	Spare	24
25	Spare	20 A	1	0 kVA	0 kVA					1	20 A	Spare	26
27	Spare	20 A	1			0 kVA	0 kVA			1	20 A	Spare	28
29	Spare	20 A	1					0 kVA	0 kVA	1	20 A	Spare	30
31	Spare	20 A	1	0 kVA	0 kVA					1	20 A	Spare	32
33	Spare	20 A	1			0 kVA	0 kVA			1	20 A	Spare	34
35	Spare	20 A	1					0 kVA	0 kVA	1	20 A	Spare	36
37	PANEL 036-PPL3C4A VIA 036-LVT005	110 A	3	22 kVA	0 kVA					1	20 A	Spare	38
39	--	--	--			21 kVA	0 kVA			1	20 A	Spare	40
41	--	--	--					21 kVA	0 kVA	1	20 A	Spare	42
			Total Load:	28 kVA		23 kVA		24 kVA					
			Total Amps:	102 A		82 A		88 A					

Legend:

Load Classification	Connected Load	Demand Factor	Estimated Demand	Panel Totals	
Lighting	11 kVA	125.00%	14 kVA		
Lighting 2	0 kVA	125.00%	0 kVA	**Total Conn. Load:**	75 kVA
Other	43 kVA	100.00%	43 kVA	**Total Est. Demand:**	73 kVA
Receptacle	21 kVA	74.15%	15 kVA	**Total Conn.:**	91 A
				Total Est. Demand:	88 A

Notes:

Branch Panel: 036-LPH4B15

Location: ELEC ROOM S447 **Supply From:** 036-SWB002 **Mounting:** Surface **Enclosure:** NEMA 1
Volts: 480/277 Wye **Phases:** 3 **Wires:** 4
A.I.C. Rating: 45,000 **Mains Type:** MCB **Mains Rating:** 250 A **MCB Rating:** 250 A

Notes:

CKT	Circuit Description	Trip	Poles	A		B		C		Poles	Trip	Circuit Description	CKT
1	Lighting LIBRARY S430I	20 A	1	0 kVA	1 kVA					1	20 A	5th FLOOR LIGHTING	2
3	OFFICES; WORKSTATIONS S450	20 A	1			1 kVA	1 kVA			1	20 A	CORRIDORS; S400	4
5	CONF. ROOM; S407	20 A	1					1 kVA	2 kVA	1	20 A	CORE SPACES; S419, S447, S409, S411, S413,	6
7	OFFICES; S402, S420	20 A	1	1 kVA	1 kVA					1	20 A	OFFICES; S430A, S430, S430B, S430C, S430D,	8
9	Spare	20 A	1			0 kVA	1 kVA			1	20 A	PENTHOUSE EXTERIOR LIGHTING	10
11	Spare	20 A	1					0 kVA	0 kVA	1	20 A	Spare	12
13	Spare	20 A	1	0 kVA	0 kVA					1	20 A	Spare	14
15	Spare	20 A	1			0 kVA	0 kVA			1	20 A	Spare	16
17	Spare	20 A	1					0 kVA	0 kVA	1	20 A	Spare	18
19	Spare	20 A	1	0 kVA	0 kVA					1	20 A	Spare	20
21	Spare	20 A	1			0 kVA	0 kVA			1	20 A	Spare	22
23	Spare	20 A	1					0 kVA	0 kVA	1	20 A	Spare	24
25	Spare	20 A	1	0 kVA	0 kVA					1	20 A	Spare	26
27	Spare	20 A	1			0 kVA	0 kVA			1	20 A	Spare	28
29	Spare	20 A	1					0 kVA	0 kVA	1	20 A	Spare	30
31	Spare	20 A	1	0 kVA	0 kVA					1	20 A	Spare	32
33	Spare	20 A	1			0 kVA	0 kVA			1	20 A	Spare	34
35	Spare	20 A	1					0 kVA	0 kVA	1	20 A	Spare	36
37	PANEL 036-PPL4B15A VIA 036-LVT008	110 A	3	23 kVA	0 kVA					1	20 A	Spare	38
39	--	--	--			21 kVA	0 kVA			1	20 A	Spare	40
41	--	--	--					20 kVA	0 kVA	1	20 A	Spare	42
			Total Load:	27 kVA		25 kVA		23 kVA					
			Total Amps:	98 A		89 A		84 A					

Legend:

Load Classification	Connected Load	Demand Factor	Estimated Demand	Panel Totals	
Lighting	11 kVA	125.00%	13 kVA		
Lighting 2	0 kVA	125.00%	0 kVA	**Total Conn. Load:**	75 kVA
Other	44 kVA	100.00%	44 kVA	**Total Est. Demand:**	73 kVA
Receptacle	20 kVA	75.10%	15 kVA	**Total Conn.:**	90 A
Spare	1 kVA	100.00%	1 kVA	**Total Est. Demand:**	88 A

Notes:

Branch Panel: 036-LPH4C4

Location: ELEC ROOM N447 **Supply From:** 036-SWB001 **Mounting:** Surface **Enclosure:** NEMA 1
Volts: 480/277 Wye **Phases:** 3 **Wires:** 4
A.I.C. Rating: 45,000 **Mains Type:** MCB **Mains Rating:** 250 A **MCB Rating:** 250 A

Notes:

CKT	Circuit Description	Trip	Poles	A		B		C		Poles	Trip	Circuit Description	CKT
1	OFFICES; N420-1, N400-1, N427-1, N440-1	20 A	1	1 kVA	1 kVA					1	20 A	OFFICES; N402, N420-1	2
3	OFFICES; N458, N456	20 A	1			1 kVA	1 kVA			1	20 A	CONF. ROOM; N407	4
5	SMALL CONF. ROOMS; N441, N423	20 A	1					1 kVA	2 kVA	1	20 A	CORE SPACES; N449, N451, N411, N409, N413,	6
7	LOBBY CORE; C408, C400B, C405, C404, C402,	20 A	1	2 kVA	1 kVA					1	20 A	Lighting CIRCULATION-1 N400-1	8
9	5th FLOOR LIGHTING	20 A	1			1 kVA	2 kVA			1	20 A	Lighting CIRCULATION N130	10
11	Spare	20 A	1					0 kVA	1 kVA	1	20 A	PENTHOUSE EXTERIOR LIGHTING	12
13	Spare	20 A	1	0 kVA	0 kVA					1	20 A	Spare	14
15	Spare	20 A	1			0 kVA	0 kVA			1	20 A	Spare	16
17	Spare	20 A	1					0 kVA	0 kVA	1	20 A	Spare	18
19	Spare	20 A	1	0 kVA	0 kVA					1	20 A	Spare	20
21	Spare	20 A	1			0 kVA	0 kVA			1	20 A	Spare	22
23	Spare	20 A	1					0 kVA	0 kVA	1	20 A	Spare	24
25	Spare	20 A	1	0 kVA	0 kVA					1	20 A	Spare	26
27	Spare	20 A	1			0 kVA	0 kVA			1	20 A	Spare	28
29	Spare	20 A	1					0 kVA	0 kVA	1	20 A	Spare	30
31	Spare	20 A	1	0 kVA	0 kVA					1	20 A	Spare	32
33	Spare	20 A	1			0 kVA	0 kVA			1	20 A	Spare	34
35	Spare	20 A	1					0 kVA	0 kVA	1	20 A	Spare	36
37	PANEL 036-PPL4C4A VIA 036-LVT007	110 A	3	21 kVA	0 kVA					1	20 A	Spare	38
39	--	--	--			21 kVA	0 kVA			1	20 A	Spare	40
41	--	--	--					22 kVA	0 kVA	1	20 A	Spare	42
			Total Load:	28 kVA		26 kVA		26 kVA					
			Total Amps:	100 A		94 A		94 A					

Legend:

Load Classification	Connected Load	Demand Factor	Estimated Demand	Panel Totals	
Lighting	14 kVA	125.00%	18 kVA		
Lighting 2	0 kVA	125.00%	0 kVA	**Total Conn. Load:**	79 kVA
Other	41 kVA	100.00%	41 kVA	**Total Est. Demand:**	77 kVA
Receptacle	23 kVA	71.82%	16 kVA	**Total Conn.:**	96 A
Spare	1 kVA	100.00%	1 kVA	**Total Est. Demand:**	92 A

Notes:

100% SUBMITTAL

AECOM

AECOM TECHNICAL SERVICES, INC.
3101 WILSON BOULEVARD
SUITE 900
ARLINGTON, VA 22201

T: 703-682-4900 F: 703.682.4901
www.aecom.com

SEAL AREA

STATE OF MARYLAND · JIEER REN · No. 40964 · PROFESSIONAL ENGINEER · 10-11-2012

KEY PLAN

REV	DATE	DESCRIPTION	S&R BR.	CUSTOMER	PM	SECT. HEAD

	INITIALS	DATE
DRAWN BY	LB/BF	
CHECKED BY	JR/MM	
A-E MANAGER	EW	
ENVIRONMENTAL BRANCH	JH	
SAFETY BRANCH	CS	
CM	MMD	
PM	RWP	
CUSTOMER	JWB	
ENG. BRANCH	DGL	

ELECTRICAL PANEL SCHEDULES

E-902

FLIGHT PROJECTS BUILDING

NATIONAL AERONAUTICS AND SPACE ADMINISTRATION
GODDARD SPACE FLIGHT CENTER GREENBELT, MARYLAND
FACILITIES MANAGEMENT DIVISION

DATE ISSUED	CoF CODE OR WR#	AECOM PROJECT NO.	SCALE
10/12/2012	12GXAZ	60187636	

FILE DATE: 10/11/2012 2:15:23 PM

Branch Panel: 036-PPL1B15A

Location: ELEC ROOM S147 **Volts:** 120/208 Wye **A.I.C. Rating:** 22,000
Supply From: 036-LVT002 **Phases:** 3 **Mains Type:** MCB
Mounting: Surface **Wires:** 4 **Mains Rating:** 225 A
Enclosure: NEMA 1 **MCB Rating:** 225 A

Notes:

CKT	Circuit Description	Trip	Poles	A		B		C		Poles	Trip	Circuit Description	CKT
1	FCU009; STAIR 2 S140	20 A	1	0 kVA	0 kVA					1	20 A	FCU013; ELEC ROOM S147	2
3	FCU017; TELECOM C115	20 A	1			0 kVA	1 kVA			1	20 A	SK-1; PANTRY/ LOUNGE S119	4
5	Spare	20 A	1					0 kVA	0 kVA	1	20 A	Spare	6
7	GENERAL OFFICES; S154, S156, S158	20 A	1	1 kVA	0 kVA					1	20 A	GENERAL OFFICE; S158	8
9	GENERAL OFFICE; S156	20 A	1			0 kVA	0 kVA			1	20 A	GENERAL OFFICE; S154	10
11	EQUIPTMENT, OFFICE; S156	20 A	1					1 kVA	1 kVA	1	20 A	EQUIPTMENT, OFFICE; S156	12
13	EQUIPTMENT, WORKSTATIONS; S150	20 A	1	1 kVA	1 kVA					1	20 A	EQUIPTMENT, WORKSTATIONS; S150	14
15	EQUIPTMENT, WORKSTATIONS; S150	20 A	1			1 kVA	1 kVA			1	20 A	EQUIPTMENT, WORKSTATIONS; S150	16
17	EQUIPTMENT, WORKSTATIONS; S150	20 A	1					1 kVA	1 kVA	1	20 A	EQUIPTMENT, WORKSTATIONS; S150	18
19	EQUIPTMENT, WORKSTATIONS; S150	20 A	1	1 kVA	1 kVA					1	20 A	EQUIPTMENT, WORKSTATIONS; S150	20
21	EQUIPTMENT, WORKSTATIONS; S150	20 A	1			0 kVA	0 kVA			1	20 A	EQUIPTMENT, WORKSTATIONS; S150	22
23	EQUIPTMENT, WORKSTATIONS; S150	20 A	1					0 kVA	0 kVA	1	20 A	EQUIPTMENT, WORKSTATIONS; S150	24
25	GENERAL OFFICES; S102, S104, S106	20 A	1	1 kVA	0 kVA					1	20 A	GENERAL OFFICE; S102	26
27	GENERAL OFFICE; S104	20 A	1			0 kVA	0 kVA			1	20 A	GENERAL OFFICE; S106	28
29	EQUIPTMENT, OFFICE; S104	20 A	1					1 kVA	1 kVA	1	20 A	EQUIPTMENT, OFFICE; S104	30
31	EQUIPTMENT, WORKSTATIONS; S120	20 A	1	1 kVA	1 kVA					1	20 A	EQUIPTMENT, WORKSTATIONS; S120	32
33	EQUIPTMENT, WORKSTATIONS; S120	20 A	1			1 kVA	1 kVA			1	20 A	EQUIPTMENT, WORKSTATIONS; S120	34
35	EQUIPTMENT, WORKSTATIONS; S120	20 A	1					1 kVA	1 kVA	1	20 A	EQUIPTMENT, WORKSTATIONS; S120	36
37	PANEL 036-PPL1B15B	20 A	3	17 kVA	0 kVA					1	20 A	Spare	38
39	--	--	--			16 kVA	0 kVA			1	20 A	Spare	40
41	--	--	--					13 kVA	0 kVA	1	20 A	Spare	42
			Total Load:	26 kVA		22 kVA		21 kVA					
			Total Amps:	217 A		185 A		176 A					

Legend:

Load Classification	Connected Load	Demand Factor	Estimated Demand	Panel Totals	
Other	46 kVA	100.00%	46 kVA		
				Total Conn. Load:	69 kVA
				Total Est. Demand:	63 kVA
				Total Conn. Current:	192 A
				Total Est. Demand Current:	174 A

Notes:

Branch Panel: 036-PPL1B15B

Location: ELEC ROOM S147 **Volts:** 120/208 Wye **A.I.C. Rating:** 22,000
Supply From: 036-PPL1B15A **Phases:** 3 **Mains Type:** MLO
Mounting: Surface **Wires:** 4 **Mains Rating:** 225 A
Enclosure: NEMA 1 **MCB Rating:** N/A

Notes:

CKT	Circuit Description	Trip	Poles	A		B		C		Poles	Trip	Circuit Description	CKT
1	EQUIPTMENT, WORKSTATIONS; S120	20 A	1	1 kVA	1 kVA					1	20 A	EQUIPTMENT, WORKSTATIONS; S120	2
3	EQUIPTMENT, WORKSTATIONS; S120	20 A	1			1 kVA	1 kVA			1	20 A	EQUIPTMENT, WORKSTATIONS; S120	4
5	EQUIPTMENT, WORKSTATIONS; S120	20 A	1					0 kVA	0 kVA	1	20 A	EQUIPTMENT, WORKSTATIONS; S120	6
7	EQUIPTMENT, WORKSTATIONS; S120	20 A	1	0 kVA	0 kVA					1	20 A	EQUIPTMENT, WORKSTATIONS; S120	8
9	EQUIPTMENT, WORKSTATIONS; S120	20 A	1			0 kVA	1 kVA			1	20 A	RECEPTION; S120, S130A	10
11	EQUIPTMENT, RECEPTION; S130A	20 A	1					1 kVA	1 kVA	1	20 A	EQUIPTMENT, RECEPTION; S130A	12
13	EQUIPTMENT, RECEPTION; S130H	20 A	1	1 kVA	1 kVA					1	20 A	EQUIPTMENT, RECEPTION; S130H	14
15	SMALL CONF. ROOM; S123	20 A	1			1 kVA	1 kVA			1	20 A	SMALL CONF. ROOM; S141	16
17	COPY/ SUPPLY; S121	20 A	1					0 kVA	0 kVA	1	20 A	COPY/ SUPPLY; S121	18
19	GENERAL, COPY/ SUPPLY; S121	20 A	1	0 kVA	0 kVA					1	20 A	COPY/ SUPPLY; S121	20
21	PANTRY/ LOUNGE; S119	20 A	1			0 kVA	1 kVA			1	20 A	PANTRY/ LOUNGE; S119	22
23	PANTRY/ LOUNGE; S119	20 A	1					0 kVA	1 kVA	1	20 A	GENERAL OFFICES; S149, S151	24
25	STORAGE; S115	20 A	1	1 kVA	1 kVA					1	20 A	GENERAL OFFICES; S113, S111	26
27	GENERAL OFFICES; S109, S111	20 A	1			1 kVA	1 kVA			1	20 A	GENERAL, CONF. ROOM; S107	28
29	WIREMOLD, PANTRY/ LOUNGE; S119	20 A	1					1 kVA	0 kVA	1	20 A	GENERAL, CONF. ROOM; S107	30
31	WIREMOLD, PANTRY/ LOUNGE; S119	20 A	1	1 kVA	0 kVA					1	20 A	GENERAL, CONF. ROOM; S107	32
33	GENERAL OFFICE; S130F	20 A	1			0 kVA	0 kVA			1	20 A	ELEV. PIT GFI RECEPTACLES	34
35	Spare	20 A	1					0 kVA	0 kVA	1	20 A	Spare	36
37	PANEL 036-PPL1B15C	110 A	3	9 kVA	0 kVA					1	20 A	Spare	38
39	--	--	--			7 kVA	0 kVA			1	20 A	Spare	40
41	--	--	--					8 kVA	0 kVA	1	20 A	Spare	42
			Total Load:	17 kVA		16 kVA		13 kVA					
			Total Amps:	140 A		134 A		105 A					

Legend:

Load Classification	Connected Load	Demand Factor	Estimated Demand	Panel Totals	
Other	27 kVA	100.00%	27 kVA		
				Total Conn. Load:	46 kVA
				Total Est. Demand:	41 kVA
				Total Conn. Current:	126 A
				Total Est. Demand Current:	114 A

Notes:

Branch Panel: 036-PPL1D4A

Location: ELEC ROOM N147 **Volts:** 120/208 Wye **A.I.C. Rating:** 22,000
Supply From: 036-LVT001 **Phases:** 3 **Mains Type:** MCB
Mounting: Surface **Wires:** 4 **Mains Rating:** 225 A
Enclosure: NEMA 1 **MCB Rating:** 225 A

Notes:

CKT	Circuit Description	Trip	Poles	A		B		C		Poles	Trip	Circuit Description	CKT
1	FCU001; STAIR 1 N140	20 A	1	0 kVA	0 kVA					1	20 A	FCU005, CIRCULATION; N100	2
3	CRP001, MECH PUMP ROOM; C111	20 A	1			1 kVA	2 kVA			1	20 A	HUH003, PUMP ROOM; 1ST FLOOR.	4
5	SK-1, PANTRY / LOUNGE; N119	20 A	1					1 kVA	0 kVA	1	20 A	CH-1, PUMP ROOM; 1ST FLOOR.	6
7	SK-1, VENDING; C108	20 A	1	1 kVA	1 kVA					1	20 A	EWC-1, ENTRY; C100B	8
9	Receptacle PANTRY / LOUNGE N119	20 A	1			0 kVA	0 kVA			1	20 A	Receptacle PANTRY / LOUNGE N119	10
11	GENERAL OFFICES; N130I, N130H	20 A	1					1 kVA	1 kVA	1	20 A	GENERAL OFFICES; N130G, N130F	12
13	GENERAL OFFICES; N130E, N130D	20 A	1	1 kVA	1 kVA					1	20 A	GRAPHICS; N130C, N130B	14
15	GENERAL OFFICES; N130B, N130A	20 A	1			1 kVA	1 kVA			1	20 A	PLANNING ROOM; N118	16
17	GENERAL OFFICES; N114, N116	20 A	1					1 kVA	1 kVA	1	20 A	PLANNING ROOM; N112	18
19	GENERAL OFFICES; N108, N106	20 A	1	1 kVA	1 kVA					1	20 A	PLANNING ROOM; N104	20
21	PLANNING ROOM; N144	20 A	1			1 kVA	1 kVA			1	20 A	GENERAL OFFICES; N146, N148	22
23	PLANNING ROOM; N150	20 A	1					1 kVA	1 kVA	1	20 A	GENERAL OFFICES; N154, N156	24
25	PLANNING ROOM; N158	20 A	1	1 kVA	1 kVA					1	20 A	GENERAL OFFICES; N149, N151	26
27	PRODUCTION ROOM; N130J	20 A	1			0 kVA	0 kVA			1	20 A	PRODUCTION ROOM; N130J	28
29	PRODUCTION ROOM; N130J	20 A	1					0 kVA	0 kVA	1	20 A	PRODUCTION ROOM; N130J	30
31	PRODUCTION ROOM; N130J	20 A	1	0 kVA	0 kVA					1	20 A	PRODUCTION ROOM; N130J	32
33	PRODUCTION ROOM; N130J	20 A	1			0 kVA	0 kVA			1	20 A	PRODUCTION ROOM; N130J	34
35	PRODUCTION ROOM; N130J	20 A	1					0 kVA	0 kVA	1	20 A	PRODUCTION ROOM; N130J	36
37	PANEL 036-PPL1D4B	20 A	3	8 kVA	0 kVA					1	20 A	PRODUCTION ROOM; N130J	38
39	--	--	--			7 kVA	0 kVA			1	20 A	Spare	40
41	--	--	--					9 kVA	0 kVA	1	20 A	Spare	42
			Total Load:	16 kVA		15 kVA		17 kVA					
			Total Amps:	135 A		124 A		140 A					

Legend:

Load Classification	Connected Load	Demand Factor	Estimated Demand	Panel Totals	
Other	15 kVA	100.00%	15 kVA		
				Total Conn. Load:	48 kVA
				Total Est. Demand:	37 kVA
				Total Conn. Current:	133 A
				Total Est. Demand Current:	102 A

Notes:

Branch Panel: 036-PPL1D4B

Location: ELEC ROOM N147 **Volts:** 120/208 Wye **A.I.C. Rating:** 22,000
Supply From: 036-PPL1D4A **Phases:** 3 **Mains Type:** MLO
Mounting: Surface **Wires:** 4 **Mains Rating:** 225 A
Enclosure: NEMA 1 **MCB Rating:** N/A

Notes:

CKT	Circuit Description	Trip	Poles	A		B		C		Poles	Trip	Circuit Description	CKT
1	COPY / SUPPLY; N121	20 A	1	0 kVA	0 kVA					1	20 A	COPY / SUPPLY; N121	2
3	GENERAL, COPY / SUPPLY; N121	20 A	1			0 kVA	0 kVA			1	20 A	COPY / SUPPLY; N121	4
5	PANTRY / LOUNGE; N119	20 A	1					0 kVA	0 kVA	1	20 A	PANTRY / LOUNGE; N119	6
7	SERVER ROOM; N111A	20 A	1	0 kVA	0 kVA					1	20 A	PANTRY / LOUNGE; N119	8
9	SERVER ROOM; N111A	20 A	1			0 kVA	0 kVA			1	20 A	SERVER ROOM; N111A	10
11	IT ROOM; N111	20 A	1					0 kVA	0 kVA	1	20 A	IT ROOM; N111	12
13	IT ROOM; N111	20 A	1	0 kVA	1 kVA					1	20 A	GENERAL, CONF. ROOM; N107	14
15	WIREMOLD, PANTRY / LOUNGE; N119	20 A	1			1 kVA	0 kVA			1	20 A	GENERAL OFFICES; N107, N109	16
17	CORRIDORS; N130, N140, N100	20 A	1					1 kVA	1 kVA	1	20 A	WIREMOLD, PANTRY / LOUNGE; N119	18
19	CORRIDORS; N100	20 A	1	1 kVA	1 kVA					1	20 A	STORAGE; N117	20
21	Spare	20 A	1			0 kVA	0 kVA			1	20 A	Spare	22
23	Spare	20 A	1					0 kVA	0 kVA	1	20 A	Spare	24
25	Spare	20 A	1	0 kVA	0 kVA					1	20 A	Spare	26
27	Spare	20 A	1			0 kVA	0 kVA			1	20 A	Spare	28
29	Spare	20 A	1					0 kVA	0 kVA	1	20 A	Spare	30
31	Spare	20 A	1	0 kVA	0 kVA					1	20 A	Spare	32
33	Spare	20 A	1			0 kVA	0 kVA			1	20 A	Spare	34
35	Spare	20 A	1					0 kVA	0 kVA	1	20 A	Spare	36
37	PANEL 036-PPL1D4C	20 A	3	4 kVA	0 kVA					1	20 A	Spare	38
39	--	--	--			5 kVA	0 kVA			1	20 A	Spare	40
41	--	--	--					6 kVA	0 kVA	1	20 A	Spare	42
			Total Load:	8 kVA		7 kVA		9 kVA					
			Total Amps:	66 A		59 A		71 A					

Legend:

Load Classification	Connected Load	Demand Factor	Estimated Demand	Panel Totals	
Other	9 kVA	100.00%	9 kVA		
				Total Conn. Load:	23 kVA
				Total Est. Demand:	21 kVA
				Total Conn. Current:	65 A
				Total Est. Demand Current:	59 A

Notes:

Branch Panel: 036-PPL2B15A

Location: ELEC ROOM S247 **Volts:** 120/208 Wye **A.I.C. Rating:** 22,000
Supply From: 036-LVT004 **Phases:** 3 **Mains Type:** MCB
Mounting: Surface **Wires:** 4 **Mains Rating:** 225 A
Enclosure: NEMA 1 **MCB Rating:** 225 A

Notes:

CKT	Circuit Description	Trip	Poles	A		B		C		Poles	Trip	Circuit Description	CKT
1	FCU010, STAIR 2; S240	20 A	1	0 kVA	0 kVA					1	20 A	FCU014, ELEC. ROOM; S247	2
3	FCU018, TELECOM; C215	20 A	1			0 kVA	1 kVA			1	20 A	SK-1, PANTRY/ LOUNGE; S219	4
5	GENERAL OFFICES; S258, S256, S254	20 A	1					1 kVA	0 kVA	1	20 A	GENERAL OFFICE; S258	6
7	GENERAL OFFICE; S256	20 A	1	0 kVA	0 kVA					1	20 A	GENERAL OFFICE; S254	8
9	EQUIPTMENT, OFFICE; S256	20 A	1			1 kVA	1 kVA			1	20 A	EQUIPMENT, OFFICE; S256	10
11	EQUIPTMENT, WORKSTATIONS; S250	20 A	1					1 kVA	1 kVA	1	20 A	EQUIPTMENT, WORKSTATIONS; S250	12
13	EQUIPTMENT, WORKSTATIONS; S250	20 A	1	1 kVA	1 kVA					1	20 A	EQUIPTMENT, WORKSTATIONS; S250	14
15	EQUIPTMENT, WORKSTATIONS; S250	20 A	1			1 kVA	1 kVA			1	20 A	EQUIPTMENT, WORKSTATIONS; S250	16
17	EQUIPTMENT, WORKSTATIONS; S250	20 A	1					1 kVA	1 kVA	1	20 A	EQUIPTMENT, WORKSTATIONS; S250	18
19	EQUIPTMENT, WORKSTATIONS; S250	20 A	1	0 kVA	0 kVA					1	20 A	EQUIPTMENT, WORKSTATIONS; S250	20
21	EQUIPTMENT, WORKSTATIONS; S250	20 A	1			0 kVA	0 kVA			1	20 A	EQUIPTMENT, WORKSTATIONS; S250	22
23	GENERAL OFFICES; S206, S204, S202	20 A	1					1 kVA	0 kVA	1	20 A	GENERAL, OFFICE; S202	24
25	GENERAL, OFFICE; S204	20 A	1	0 kVA	0 kVA					1	20 A	GENERAL, OFFICE; S206	26
27	EQUIPTMENT, OFFICE; S204	20 A	1			1 kVA	1 kVA			1	20 A	EQUIPTMENT, OFFICE; S204	28
29	EQUIPTMENT, WORKSTATIONS; S220	20 A	1					1 kVA	1 kVA	1	20 A	EQUIPTMENT, WORKSTATIONS; S220	30
31	EQUIPTMENT, WORKSTATIONS; S220	20 A	1	1 kVA	1 kVA					1	20 A	EQUIPTMENT, WORKSTATIONS; S220	32
33	EQUIPTMENT, WORKSTATIONS; S220	20 A	1			1 kVA	1 kVA			1	20 A	EQUIPTMENT, WORKSTATIONS; S220	34
35	EQUIPTMENT, WORKSTATIONS; S220	20 A	1					1 kVA	1 kVA	1	20 A	EQUIPTMENT, WORKSTATIONS; S220	36
37	PANEL 036-PPL2B15B	20 A	3	17 kVA	0 kVA					1	20 A	Spare	38
39	--	--	--			14 kVA	0 kVA			1	20 A	Spare	40
41	--	--	--					14 kVA	0 kVA	1	20 A	Spare	42
			Total Load:	22 kVA		24 kVA		25 kVA					
			Total Amps:	185 A		199 A		205 A					

Legend:

Load Classification	Connected Load	Demand Factor	Estimated Demand	Panel Totals	
Other	48 kVA	100.00%	48 kVA		
				Total Conn. Load:	71 kVA
				Total Est. Demand:	64 kVA
				Total Conn. Current:	196 A
				Total Est. Demand Current:	179 A

Notes:

Branch Panel: 036-PPL2B15B

Location: ELEC ROOM S247 **Volts:** 120/208 Wye **A.I.C. Rating:** 22,000
Supply From: 036-PPL2B15A **Phases:** 3 **Mains Type:** MLO
Mounting: Surface **Wires:** 4 **Mains Rating:** 225 A
Enclosure: NEMA 1 **MCB Rating:** N/A

Notes:

CKT	Circuit Description	Trip	Poles	A		B		C		Poles	Trip	Circuit Description	CKT
1	EQUIPTMENT, WORKSTATIONS; S220	20 A	1	1 kVA	1 kVA					1	20 A	EQUIPTMENT, WORKSTATIONS; S220	2
3	EQUIPTMENT, WORKSTATIONS; S220	20 A	1			0 kVA	0 kVA			1	20 A	EQUIPTMENT, WORKSTATIONS; S220	4
5	EQUIPTMENT, WORKSTATIONS; S220	20 A	1					0 kVA	0 kVA	1	20 A	EQUIPTMENT, WORKSTATIONS; S220	6
7	EQUIPTMENT, WORKSTATIONS; S220	20 A	1	0 kVA	1 kVA					1	20 A	RECEPTION; S230A, S220	8
9	EQUIPTMENT, RECEPTION; S230A	20 A	1			1 kVA	1 kVA			1	20 A	EQUIPTMENT, RECEPTION; S230A	10
11	EQUIPTMENT, OFFICE; S230F	20 A	1					1 kVA	0 kVA	1	20 A	EQUIPTMENT, OFFICE; S230E	12
13	EQUIPTMENT, OFFICE; S230D	20 A	1	0 kVA	0 kVA					1	20 A	EQUIPTMENT, OFFICE; S230C	14
15	EQUIPTMENT, OFFICE; S230B	20 A	1			0 kVA	0 kVA			1	20 A	RECEPTION; S230G, S230F	16
17	EQUIPTMENT, SECRETARY; S230G	20 A	1					1 kVA	1 kVA	1	20 A	EQUIPTMENT, SECRETARY; S230G	18
19	SMALL CONF. ROOM; S241	20 A	1	1 kVA	1 kVA					1	20 A	SMALL CONF. ROOM; S223	20
21	COPY/ SUPPLY; S221	20 A	1			1 kVA	0 kVA			1	20 A	COPY/ SUPPLY; S221	22
23	COPY/ SUPPLY; S221	20 A	1					0 kVA	0 kVA	1	20 A	COPY/ SUPPLY; S221	24
25	PANTRY/ LOUNGE; S219	20 A	1	0 kVA	0 kVA					1	20 A	PANTRY/ LOUNGE; S219	26
27	PANTRY/ LOUNGE; S219	20 A	1			0 kVA	1 kVA			1	20 A	GENERAL STORAGE; S215	28
29	GENERAL OFFICES; S251, S249	20 A	1					1 kVA	1 kVA	1	20 A	GENERAL OFFICES; S213, S211	30
31	GENERAL OFFICES; S209, S211	20 A	1	1 kVA	1 kVA					1	20 A	GENERAL, CONF. ROOM; S207	32
33	GENERAL, CONF. ROOM; S207	20 A	1			1 kVA	0 kVA			1	20 A	GENERAL, CONF. ROOM; S207	34
35	GENERAL, CONF. ROOM; S207	20 A	1					0 kVA	1 kVA	1	20 A	WIREMOLD, PANTRY/ LOUNGE; S219	36
37	PANEL 036-PPL2B15C	20 A	3	9 kVA	1 kVA					1	20 A	WIREMOLD, PANTRY/ LOUNGE; S219	38
39	--	--	--			8 kVA	0 kVA			1	20 A	Spare	40
41	--	--	--					7 kVA	0 kVA	1	20 A	Spare	42
			Total Load:	17 kVA		14 kVA		14 kVA					
			Total Amps:	142 A		120 A		115 A					

Legend:

Load Classification	Connected Load	Demand Factor	Estimated Demand	Panel Totals	
Other	27 kVA	100.00%	27 kVA		
				Total Conn. Load:	45 kVA
				Total Est. Demand:	41 kVA
				Total Conn. Current:	125 A
				Total Est. Demand Current:	114 A

Notes:

100% SUBMITTAL

AECOM
AECOM TECHNICAL SERVICES, INC.
3101 WILSON BOULEVARD
SUITE 900
ARLINGTON, VA 22201
T: 703-682-4900 F: 703.682.4901
www.aecom.com

SEAL AREA

KEY PLAN

REV	DATE	DESCRIPTION	S&R BR.	CUSTOMER	PM	SECT. HEAD

	INITIALS	DATE
DRAWN BY	LB/BF	
CHECKED BY	JR/MM	
A-E MANAGER	EW	
ENVIRONMENTAL BRANCH	JH	
SAFETY BRANCH	CS	
CM	MMD	
PM	RWP	
CUSTOMER	JWB	
ENG. BRANCH	DGL	

ELECTRICAL PANEL SCHEDULES

E-903

FLIGHT PROJECTS BUILDING

NATIONAL AERONAUTICS AND SPACE ADMINISTRATION
GODDARD SPACE FLIGHT CENTER GREENBELT, MARYLAND
FACILITIES MANAGEMENT DIVISION

DATE ISSUED	CoF CODE OR WR#	AECOM PROJECT NO.	SCALE
10/12/2012	12GXAZ	60187636	

FILE DATE: 10/11/2012 2:15:24 PM

Branch Panel: 036-PPL2B15C

Location:	ELEC ROOM S247	**Volts:**	120/208 Wye	**A.I.C. Rating:**	22,000
Supply From:	036-PPL2B15B	**Phases:**	3	**Mains Type:**	MLO
Mounting:	Surface	**Wires:**	4	**Mains Rating:**	225 A
Enclosure:	NEMA 1			**MCB Rating:**	N/A

Notes:

CKT	Circuit Description	Trip	Poles	A		B		C		Poles	Trip	Circuit Description	CKT
1	CORRIDORS; S200, S220, S250	20 A	1	1 kVA	1 kVA					1	20 A	CORRIDORS; S230H, S200	2
3	GENERAL; C215, C200A	20 A	1			1 kVA	0 kVA			1	20 A	CONF. ROOM; C202	4
5	ELEC. ROOM; S247	20 A	1					0 kVA	1 kVA	1	20 A	EQUIPMENT, OFFICE; S230F	6
7	EQUIPMENT, OFFICE; S230F	20 A	1	1 kVA	1 kVA					1	20 A	EQUIPMENT, OFFICE; S230E	8
9	EQUIPMENT, OFFICE; S230E	20 A	1			1 kVA	1 kVA			1	20 A	EQUIPMENT, OFFICE; S230D	10
11	EQUIPMENT, OFFICE; S230D	20 A	1					1 kVA	1 kVA	1	20 A	EQUIPMENT, OFFICE; S230C	12
13	EQUIPMENT, OFFICE; S230C	20 A	1	1 kVA	1 kVA					1	20 A	EQUIPMENT, OFFICE; S230B	14
15	EQUIPMENT, OFFICE; S230B	20 A	1			1 kVA	0 kVA			1	20 A	GENERAL, CONF. ROOM; S207	16
17	GENERAL, CONF. ROOM; S207	20 A	1					1 kVA	1 kVA	1	20 A	GENERAL, CONF. ROOM; S207	18
19	GENERAL, CONF. ROOM; S207	20 A	1	1 kVA	1 kVA					1	20 A	GENERAL, CONF. ROOM; S207	20
21	GENERAL, SYMOPOSIUM; C210	20 A	1			1 kVA	1 kVA			1	20 A	GENERAL, SYMOPOSIUM; C210	22
23	GENERAL, SYMOPOSIUM; C210	20 A	1					1 kVA	0 kVA	1	20 A	GENERAL, SYMOPOSIUM; C210	24
25	GENERAL, SYMOPOSIUM; C210	20 A	1	0 kVA	0 kVA					1	20 A	DOOR HARDWARE; S430S	26
27	Receptacle PANTRY/ LOUNGE S219	20 A	1			0 kVA	0 kVA			1	20 A	Receptacle PANTRY/ LOUNGE S219	28
29	Spare	20 A	1					0 kVA	0 kVA	1	20 A	Spare	30
31	Spare	20 A	1	0 kVA	0 kVA					1	20 A	Spare	32
33	Spare	20 A	1			0 kVA	0 kVA			1	20 A	Spare	34
35	Spare	20 A	1					0 kVA	0 kVA	1	20 A	Spare	36
37	Spare	20 A	1	0 kVA	0 kVA					1	20 A	Spare	38
39	Spare	20 A	1			0 kVA	0 kVA			1	20 A	Spare	40
41	Spare	20 A	1					0 kVA	0 kVA	1	20 A	Spare	42
			Total Load:	9 kVA		8 kVA		7 kVA					
			Total Amps:	73 A		67 A		61 A					

Legend:

Load Classification	Connected Load	Demand Factor	Estimated Demand	Panel Totals	
Other	18 kVA	100.00%	18 kVA		
				Total Conn. Load:	24 kVA
				Total Est. Demand:	24 kVA
				Total Conn. Current:	67 A
				Total Est. Demand Current:	67 A

Notes:

Branch Panel: 036-PPL2C4A

Location:	ELEC ROOM N247	**Volts:**	120/208 Wye	**A.I.C. Rating:**	22,000
Supply From:	036-LVT003	**Phases:**	3	**Mains Type:**	MCB
Mounting:	Surface	**Wires:**	4	**Mains Rating:**	225 A
Enclosure:	NEMA 1			**MCB Rating:**	225 A

Notes:

CKT	Circuit Description	Trip	Poles	A		B		C		Poles	Trip	Circuit Description	CKT
1	FCU002, STAIR 1; N240	20 A	1	0 kVA	1 kVA					1	20 A	EWC-1, ENTRY; C200B	2
3	FCU006, ELEC. ROOM; N247	20 A	1			0 kVA	0 kVA			1	20 A	GENERAL OFFICES; N230G, N230F	4
5	EQUIPTMENT, WORKSTATIONS; N250	20 A	1					0 kVA	1 kVA	1	20 A	EQUIPTMENT, OFFICE; N254	6
7	GENERAL, OFFICE; N230F	20 A	1	1 kVA	1 kVA					1	20 A	RECEPTION; N230A, N230B	8
9	SK-1, PANTRY/ LOUNGE; N219	20 A	1			1 kVA	1 kVA			1	20 A	SK-1, VENDING; C208	10
11	EQUIPTMENT, OFFICE; N254	20 A	1					1 kVA	1 kVA	1	20 A	GENERAL OFFICES; N206, N204, N202	12
13	GENERAL, OFFICE; N254	20 A	1	0 kVA	0 kVA					1	20 A	GENERAL, OFFICE; N230C	14
15	GENERAL, OFFICE; N256	20 A	1			0 kVA	0 kVA			1	20 A	GENERAL, OFFICE; N230D	16
17	GENERAL, OFFICE; N258	20 A	1					0 kVA	0 kVA	1	20 A	GENERAL, OFFICE; N230E	18
19	EQUIPTMENT, WORKSTATIONS; N250	20 A	1	0 kVA	1 kVA					1	20 A	EQUIPTMENT, WORKSTATIONS; N250	20
21	EQUIPTMENT, WORKSTATIONS; N250	20 A	1			0 kVA	1 kVA			1	20 A	EQUIPTMENT, WORKSTATIONS; N250	22
23	GENERAL, OFFICE; N230B	20 A	1					0 kVA	1 kVA	1	20 A	EQUIPTMENT, WORKSTATIONS; N250	24
25	EQUIPTMENT, WORKSTATIONS; N250	20 A	1	1 kVA	1 kVA					1	20 A	EQUIPTMENT, RECEPTION; N230A	26
27	EQUIPTMENT, WORKSTATIONS; N250	20 A	1			1 kVA	1 kVA			1	20 A	EQUIPTMENT, SECRETARY; N230G	28
29	EQUIPTMENT, WORKSTATIONS; N250	20 A	1					1 kVA	1 kVA	1	20 A	EQUIPTMENT, SECRETARY; N230G	30
31	EQUIPTMENT, OFFICE; N258	20 A	1	1 kVA	1 kVA					1	20 A	GENERAL OFFICES; N254, N256, N258	32
33	EQUIPTMENT, OFFICE; N258	20 A	1			1 kVA	1 kVA			1	20 A	SMALL CONF. ROOM; N223	34
35	EQUIPTMENT, RECEPTION; N230A	20 A	1					1 kVA	1 kVA	1	20 A	SMALL CONF. ROOM; N241	36
37	PANEL 036-PPL2C4B	70 A	3	8 kVA	0 kVA					1	20 A	Spare	38
39	--	--	--			10 kVA	0 kVA			1	20 A	Spare	40
41	--	--	--					7 kVA	0 kVA	1	20 A	Spare	42
			Total Load:	16 kVA		18 kVA		16 kVA					
			Total Amps:	129 A		152 A		136 A					

Legend:

Load Classification	Connected Load	Demand Factor	Estimated Demand	Panel Totals	
Other	32 kVA	100.00%	32 kVA		
				Total Conn. Load:	50 kVA
				Total Est. Demand:	46 kVA
				Total Conn. Current:	139 A
				Total Est. Demand Current:	127 A

Notes:

Branch Panel: 036-PPL2C4B

Location:	ELEC ROOM N247	**Volts:**	120/208 Wye	**A.I.C. Rating:**	22,000
Supply From:	036-PPL2C4A	**Phases:**	3	**Mains Type:**	MLO
Mounting:	Surface	**Wires:**	4	**Mains Rating:**	225 A
Enclosure:	NEMA 1			**MCB Rating:**	N/A

Notes:

CKT	Circuit Description	Trip	Poles	A		B		C		Poles	Trip	Circuit Description	CKT
1	EQUIPTMENT, OFFICE; N202	20 A	1	1 kVA	1 kVA					1	20 A	EQUIPTMENT, OFFICE; N202	2
3	EQUIPTMENT, OFFICE; N206	20 A	1			1 kVA	1 kVA			1	20 A	EQUIPTMENT, OFFICE; N206	4
5	EQUIPTMENT, WORKSTATIONS; N220	20 A	1					1 kVA	1 kVA	1	20 A	EQUIPTMENT, WORKSTATIONS; N220	6
7	EQUIPTMENT, WORKSTATIONS; N220	20 A	1	1 kVA	1 kVA					1	20 A	EQUIPTMENT, WORKSTATIONS; N220	8
9	EQUIPTMENT, WORKSTATIONS; N220	20 A	1			1 kVA	1 kVA			1	20 A	EQUIPTMENT, WORKSTATIONS; N220	10
11	EQUIPTMENT, WORKSTATIONS; N220	20 A	1					1 kVA	1 kVA	1	20 A	EQUIPTMENT, WORKSTATIONS; N220	12
13	EQUIPTMENT, WORKSTATIONS; N220	20 A	1	0 kVA	0 kVA					1	20 A	EQUIPTMENT, WORKSTATIONS; N220	14
15	EQUIPTMENT, WORKSTATIONS; N220	20 A	1			0 kVA	0 kVA			1	20 A	EQUIPTMENT, WORKSTATIONS; N220	16
17	GENERAL, OFFICE; N206	20 A	1					0 kVA	0 kVA	1	20 A	GENERAL, OFFICE; N204	18
19	GENERAL, OFFICE; N202	20 A	1	0 kVA	1 kVA					1	20 A	GENERAL, COPY/ SUPPLY; N221	20
21	COPY/ SUPPLY; N221	20 A	1			0 kVA	0 kVA			1	20 A	COPY/ SUPPLY; N221	22
23	COPY/ SUPPLY' N221	20 A	1					0 kVA	0 kVA	1	20 A	PANTRY/ LOUNGE; N219	24
25	PANTRY/ LOUNGE; N219	20 A	1	0 kVA	0 kVA					1	20 A	PANTRY/ LOUNGE; N219	26
27	GENERAL OFFICES; N249, N251	20 A	1			1 kVA	1 kVA			1	20 A	STORAGE; N215	28
29	GENERAL OFFICES; N213, N211	20 A	1					1 kVA	1 kVA	1	20 A	GENERAL OFFICES; N209, N211	30
31	WIREMOLD, PANTRY/ LOUNGE; N219	20 A	1	1 kVA	1 kVA					1	20 A	WIREMOLD, PANTRY/ LOUNGE; N219	32
33	GENERAL, CONF. ROOM; N207	20 A	1			1 kVA	1 kVA			1	20 A	GENERAL, CONF. ROOM; N207	34
35	GENERAL, CONF. ROOM; N207	20 A	1					0 kVA	0 kVA	1	20 A	GENERAL, CONF. ROOM; N207	36
37	Receptacle PANTRY/ LOUNGE N219	20 A	1	1 kVA	0 kVA					1	20 A	Spare	38
39	Receptacle PANTRY/ LOUNGE N219	20 A	1			1 kVA	0 kVA			1	20 A	Spare	40
41									0 kVA	1	20 A	Spare	42
			Total Load:	8 kVA		10 kVA		7 kVA					
			Total Amps:	67 A		85 A		62 A					

Legend:

Load Classification	Connected Load	Demand Factor	Estimated Demand	Panel Totals	
Other	15 kVA	100.00%	15 kVA		
				Total Conn. Load:	26 kVA
				Total Est. Demand:	25 kVA
				Total Conn. Current:	71 A
				Total Est. Demand Current:	70 A

Notes:

Branch Panel: 036-PPL2C4C

Location:	ELEC ROOM N247	**Volts:**	120/208 Wye	**A.I.C. Rating:**	22,000
Supply From:	036-LVT012	**Phases:**	3	**Mains Type:**	MCB
Mounting:	Surface	**Wires:**	4	**Mains Rating:**	225 A
Enclosure:	NEMA 1			**MCB Rating:**	150 A

Notes:

CKT	Circuit Description	Trip	Poles	A		B		C		Poles	Trip	Circuit Description	CKT
1	CORRIDORS; N230, N250, N220, N200	20 A	1	1 kVA	1 kVA					1	20 A	CORRIDORS; N220, N250, N200	2
3	GENERAL CORE; C204, C205, C206, C203	20 A	1			1 kVA	1 kVA			1	20 A	GENERAL CORE; C207, C208	4
5	VENDING; C208	20 A	1					1 kVA	1 kVA	1	20 A	GENERAL LOBBY; C200-1	6
7	GENERAL, SYMPOSIUM; C210	20 A	1	0 kVA	0 kVA					1	20 A	GENERAL, SYMPOSIUM; C210	8
9	GENERAL, SYMPOSIUM; C210	20 A	1			0 kVA	0 kVA			1	20 A	GENERAL, SYMPOSIUM; C210	10
11	GENERAL, SYMPOSIUM; C210	20 A	1					0 kVA	0 kVA	1	20 A	GENERAL, SYMPOSIUM; C210	12
13	GENERAL, SYMPOSIUM; C210	20 A	1	0 kVA	1 kVA					1	20 A	PODIUM, SYMOPOSIUM; C210	14
15	PODIUM, SYMOPOSIUM; C210	20 A	1			1 kVA	1 kVA			1	20 A	PODIUM, SYMOPOSIUM; C210	16
17	PROJECTION SCREEN, SYMOPOSIUM; C210	20 A	1					1 kVA	1 kVA	1	20 A	PROJECTION SCREEN, SYMOPOSIUM; C210	18
19	PROJECTION SCREEN, SYMOPOSIUM; C210	20 A	1	1 kVA	1 kVA					1	20 A	PROJECTOR, SYMOPOSIUM; C210	20
21	PROJECTOR, SYMOPOSIUM; C210	20 A	1			1 kVA	1 kVA			1	20 A	PROJECTOR, SYMOPOSIUM; C210	22
23	ELEC. ROOM; N247	20 A	1					0 kVA	1 kVA	1	20 A	EQUIPMENT, OFFICE; N230F	24
25	EQUIPMENT, OFFICE; N230F	20 A	1	1 kVA	1 kVA					1	20 A	EQUIPMENT, OFFICE; N230E	26
27	EQUIPMENT, OFFICE; N230E	20 A	1			1 kVA	1 kVA			1	20 A	EQUIPMENT, OFFICE; N230D	28
29	EQUIPMENT, OFFICE; N230D	20 A	1					1 kVA	1 kVA	1	20 A	EQUIPMENT, OFFICE; N230C	30
31	EQUIPMENT, OFFICE; N230C	20 A	1	1 kVA	1 kVA					1	20 A	EQUIPMENT, OFFICE; N230B	32
33	EQUIPMENT, OFFICE; N230B	20 A	1			1 kVA	0 kVA			1	20 A	Receptacle CONF ROOM N207	34
35	GENERAL, CONF. ROOM; N207	20 A	1					0 kVA	0 kVA	1	20 A	GENERAL, CONF. ROOM; N207	36
37	GENERAL, CONF. ROOM; N207	20 A	1	1 kVA	1 kVA					1	20 A	GENERAL, CONF. ROOM; N207	38
39	Spare	20 A	1			0 kVA	0 kVA			1	20 A	Spare	40
41	Spare	20 A	1					0 kVA	0 kVA	1	20 A	Spare	42
			Total Load:	13 kVA		11 kVA		9 kVA					
			Total Amps:	111 A		88 A		72 A					

Legend:

Load Classification	Connected Load	Demand Factor	Estimated Demand	Panel Totals	
Other	22 kVA	100.00%	22 kVA		
				Total Conn. Load:	33 kVA
				Total Est. Demand:	32 kVA
				Total Conn. Current:	90 A
				Total Est. Demand Current:	90 A

Notes:

Branch Panel: 036-PPL3B15A

Location:	ELEC RM S347	**Volts:**	120/208 Wye	**A.I.C. Rating:**	22,000
Supply From:	036-LVT006	**Phases:**	3	**Mains Type:**	MCB
Mounting:	Surface	**Wires:**	4	**Mains Rating:**	225 A
Enclosure:	NEMA 1			**MCB Rating:**	225 A

Notes:

CKT	Circuit Description	Trip	Poles	A		B		C		Poles	Trip	Circuit Description	CKT
1	FCU011, STAIR 2; S340	20 A	1	0 kVA	0 kVA					1	20 A	FCU015, ELEC. RM; S347	2
3	SK-1, PANTRY/ LOUNGE; S319	20 A	1			1 kVA	0 kVA			1	20 A	FCU019, TELECOM; C315	4
5	GENERAL, OFFICES; S358, S356, S354	20 A	1					1 kVA	0 kVA	1	20 A	GENERAL, ELEC. RM; S347	6
7	EQUIPMENT, OFFICE; S356	20 A	1	1 kVA	1 kVA					1	20 A	EQUIPMENT, OFFICE; S356	8
9	EQUIPMENT, WORKSTATIONS; S350	20 A	1			1 kVA	1 kVA			1	20 A	EQUIPMENT, WORKSTATIONS; S350	10
11	EQUIPMENT, WORKSTATIONS; S350	20 A	1					1 kVA	1 kVA	1	20 A	EQUIPMENT, WORKSTATIONS; S350	12
13	EQUIPMENT, WORKSTATIONS; S350	20 A	1	1 kVA	1 kVA					1	20 A	EQUIPMENT, WORKSTATIONS; S350	14
15	EQUIPMENT, WORKSTATIONS; S350	20 A	1			1 kVA	1 kVA			1	20 A	EQUIPMENT, WORKSTATIONS; S350	16
17	EQUIPMENT, OFFICE; S358	20 A	1					0 kVA	0 kVA	1	20 A	EQUIPMENT, OFFICE; S354	18
19	EQUIPMENT, WORKSTATIONS; S350	20 A	1	0 kVA	0 kVA					1	20 A	EQUIPMENT, WORKSTATIONS; S350	20
21	EQUIMPENT, WORKSTATIONS; S350	20 A	1			0 kVA	0 kVA			1	20 A	EQUIPMENT, WORKSTATIONS; S350	22
23	GENERAL, OFFICES; S302, S304, S306	20 A	1					1 kVA	1 kVA	1	20 A	EQUIPMENT, OFFICE; S304	24
25	EQUIPMENT, OFFICE; S304	20 A	1	1 kVA	1 kVA					1	20 A	EQUIPMENT, WORKSTATIONS; S320	26
27	EQUIPMENT, WORKSTATIONS; S320	20 A	1			1 kVA	1 kVA			1	20 A	EQUIPMENT, WORKSTATIONS; S320	28
29	EQUIPMENT, WORKSTATIONS; S320	20 A	1					1 kVA	1 kVA	1	20 A	EQUIPMENT, WORKSTATIONS; S320	30
31	EQUIPMENT, WORKSTATIONS; S320	20 A	1	1 kVA	1 kVA					1	20 A	EQUIPMENT, WORKSTATIONS; S320	32
33	EQUIPMENT, WORKSTATIONS; S320	20 A	1			1 kVA	1 kVA			1	20 A	EQUIPMENT, WORKSTATIONS; S320	34
35	EQUIPMENT, WORKSTATIONS; S320	20 A	1					1 kVA					36
37	PANEL 036-PPL3B15B	20 A	3	14 kVA	0 kVA					1	20 A	Spare	38
39	--	--	--			13 kVA	0 kVA			1	20 A	Spare	40
41	--	--	--					13 kVA	0 kVA	1	20 A	Spare	42
			Total Load:	22 kVA		23 kVA		22 kVA					
			Total Amps:	186 A		190 A		185 A					

Legend:

Load Classification	Connected Load	Demand Factor	Estimated Demand	Panel Totals	
Other	44 kVA	100.00%	44 kVA		
				Total Conn. Load:	67 kVA
				Total Est. Demand:	61 kVA
				Total Conn. Current:	187 A
				Total Est. Demand Current:	168 A

Notes:

Branch Panel: 036-PPL3B15B

Location:	ELEC RM S347	**Volts:**	120/208 Wye	**A.I.C. Rating:**	22,000
Supply From:	036-PPL3B15A	**Phases:**	3	**Mains Type:**	MLO
Mounting:	Surface	**Wires:**	4	**Mains Rating:**	225 A
Enclosure:	NEMA 1			**MCB Rating:**	N/A

Notes:

CKT	Circuit Description	Trip	Poles	A		B		C		Poles	Trip	Circuit Description	CKT
1	EQUIPMENT, RECEPTION; S330A	20 A	1	1 kVA	0 kVA					1	20 A	EQUIPMENT, OFFICE; S302	2
3	EQUIPMENT, RECEPTION; S330A	20 A	1			1 kVA	0 kVA			1	20 A	EQUIMPENT, OFFICE; S306	4
5	EQUIPMENT, OFFICE; S304	20 A	1					0 kVA	0 kVA	1	20 A	EQUIPMENT, WORKSTATIONS; S320	6
7	EQUIPMENT, WORKSTATIONS; S320	20 A	1	0 kVA	0 kVA					1	20 A	EQUIPMENT, WORKSTATIONS; S320	8
9	EQUIPMENT, WORKSTATIONS; S320	20 A	1			0 kVA	1 kVA			1	20 A	GENERAL, RECEPTION; S330A	10
11	EQUIPMENT, WORKSTATIONS; S320	20 A	1					0 kVA	1 kVA	1	20 A	GENERAL, OFFICE; S330F	12
13	GENERAL, OFFICE; S330E	20 A	1	0 kVA	0 kVA					1	20 A	GENERAL, OFFICE; S330D	14
15	GENERAL, OFFICE; S330C	20 A	1			0 kVA	0 kVA			1	20 A	GENERAL, OFFICE; S330B	16
17	EQUIPMENT, SECRETARY; S330G	20 A	1					1 kVA	1 kVA	1	20 A	EQUIPMENT, SECRETARY; S330G	18
19	GENERAL, SECRETARY; S330G	20 A	1	0 kVA	1 kVA					1	20 A	SMALL CONF. ROOM; S341	20
21	SMALL CONF. ROOM; S323	20 A	1			1 kVA	1 kVA			1	20 A	COPY/ SUPPLY; S321	22
23	COPY/ SUPPLY; S321	20 A	1					0 kVA	0 kVA	1	20 A	COPY/ SUPPLY; S321	24
25	COPY/ SUPPLY; S321	20 A	1	0 kVA	0 kVA					1	20 A	PANTRY/ LOUNGE; S319	26
27	PANTRY/ LOUNGE; S319	20 A	1			0 kVA	0 kVA			1	20 A	PANTRY/ LOUNGE; S319	28
29	STORAGE; S315	20 A	1					1 kVA	1 kVA	1	20 A	GENERAL OFFICES; S311, S313	30
31	GENERAL OFFICES; S349, S351	20 A	1	1 kVA	1 kVA					1	20 A	GENERAL OFFICE; S309	32
33	GENERAL, CONF. ROOM; S307	20 A	1			1 kVA	0 kVA			1	20 A	GENERAL, CONF. ROOM; S307	34
35	GENERAL, CONF. ROOM; S307	20 A	1					1 kVA	0 kVA	1	20 A	GENERAL, CONF. ROOM; S307	36
37	PANEL 036-PPL3B15C	20 A	3	9 kVA	0 kVA					1	20 A	Spare	38
39	--	--	--			7 kVA	0 kVA			1	20 A	Spare	40
41	--	--	--					7 kVA	0 kVA	1	20 A	Spare	42
			Total Load:	14 kVA		13 kVA		13 kVA					
			Total Amps:	115 A		110 A		111 A					

Legend:

Load Classification	Connected Load	Demand Factor	Estimated Demand	Panel Totals	
Other	21 kVA	100.00%	21 kVA		
				Total Conn. Load:	40 kVA
				Total Est. Demand:	36 kVA
				Total Conn. Current:	112 A
				Total Est. Demand Current:	99 A

Notes:

100% SUBMITTAL

NORTH

AECOM

AECOM TECHNICAL SERVICES, INC.
3101 WILSON BOULEVARD
SUITE 900
ARLINGTON, VA 22201

T: 703-682-4900 F: 703.682.4901
www.aecom.com

SEAL AREA

STATE OF MARYLAND · JIEER REN · No. 40964 · PROFESSIONAL ENGINEER · 10-11-2012

KEY PLAN

REV	DATE	DESCRIPTION	S&R BR.	CUSTOMER	PM	SECT. HEAD

	INITIALS	DATE
DRAWN BY	LB/BF	
CHECKED BY	JR/MM	
A-E MANAGER	EW	
ENVIRONMENTAL BRANCH	JH	
SAFETY BRANCH	CS	
CM	MMD	
PM	RWP	
CUSTOMER	JWB	
ENG. BRANCH	DGL	

ELECTRICAL PANEL SCHEDULES

E-904

FLIGHT PROJECTS BUILDING

NATIONAL AERONAUTICS AND SPACE ADMINISTRATION

GODDARD SPACE FLIGHT CENTER GREENBELT, MARYLAND
FACILITIES MANAGEMENT DIVISION

DATE ISSUED	CoF CODE OR WR#	AECOM PROJECT NO.	SCALE
10/12/2012	12GXAZ	60187636	

FILE DATE: 10/11/2012 2:15:26 PM

Branch Panel: 036-PPL3B15C

Location: ELEC RM S347 **Volts:** 120/208 Wye **A.I.C. Rating:** 22,000
Supply From: 036-PPL3B15B **Phases:** 3 **Mains Type:** MLO
Mounting: Surface **Wires:** 4 **Mains Rating:** 225 A
Enclosure: NEMA 1 **MCB Rating:** N/A

Notes:

CKT	Circuit Description	Trip	Poles	A		B		C		Poles	Trip	Circuit Description	CKT
1	CORRIDORS; S300, S350, S320	20 A	1	1 kVA	1 kVA					1	20 A	CORRIDORS; S330, S300	2
3	CONF. ROOM; C302	20 A	1			1 kVA	1 kVA			1	20 A	ENTRY; C300A	4
5	WIREMOLD, PANTRY/ LOUNGE; S319	20 A	1					1 kVA	1 kVA	1	20 A	WIREMOLD, PANTRY/ LOUNGE; S319	6
7	EQUIPMENT, OFFICE; S330F	20 A	1	1 kVA	1 kVA					1	20 A	EQUIPMENT, OFFICE; S330F	8
9	EQUIPMENT, OFFICE; S330E	20 A	1			1 kVA	1 kVA			1	20 A	EQUIPMENT, OFFICE; S330E	10
11	EQUIPMENT, OFFICE; S330D	20 A	1					1 kVA	1 kVA	1	20 A	EQUIPMENT, OFFICE; S330D	12
13	EQUIPMENT, OFFICE; S330C	20 A	1	1 kVA	1 kVA					1	20 A	EQUIPMENT, OFFICE; S330C	14
15	EQUIPMENT, OFFICE; S330B	20 A	1			1 kVA	1 kVA			1	20 A	EQUIPMENT, OFFICE; S330B	16
17	PROJECTOR, CONF. ROOM; S307	20 A	1					1 kVA	1 kVA	1	20 A	PROJECTOR, CONF. ROOM; S307	18
19	PROJECTION SCREEN, CONF. ROOM; S307	20 A	1	1 kVA	1 kVA					1	20 A	PROJECTION SCREEN, CONF. ROOM; S307	20
21	GENERAL, CONF. ROOM; S307	20 A	1			0 kVA	1 kVA			1	20 A	Receptacle PANTRY/ LOUNGE S319	22
23	Spare	20 A	1					0 kVA	1 kVA	1	20 A	Receptacle PANTRY/ LOUNGE S319	24
25	Spare	20 A	1	0 kVA	0 kVA					1	20 A	Spare	26
27	Spare	20 A	1			0 kVA	0 kVA			1	20 A	Spare	28
29	Spare	20 A	1					0 kVA	0 kVA	1	20 A	Spare	30
31	Spare	20 A	1	0 kVA	0 kVA					1	20 A	Spare	32
33	Spare	20 A	1			0 kVA	0 kVA			1	20 A	Spare	34
35	Spare	20 A	1					0 kVA	0 kVA	1	20 A	Spare	36
37	Spare	20 A	1	0 kVA	0 kVA					1	20 A	Spare	38
39	Spare	20 A	1			0 kVA	0 kVA			1	20 A	Spare	40
41	Spare	20 A	1					0 kVA	0 kVA	1	20 A	Spare	42
			Total Load:	9 kVA		7 kVA		7 kVA					
			Total Amps:	71 A		61 A		58 A					

Legend:

Load Classification	Connected Load	Demand Factor	Estimated Demand	Panel Totals	
Other	16 kVA	100.00%	16 kVA		
				Total Conn. Load:	23 kVA
				Total Est. Demand:	23 kVA
				Total Conn. Current:	64 A
				Total Est. Demand Current:	64 A

Notes:

Branch Panel: 036-PPL3C4A

Location: ELEC ROOM N347 **Volts:** 120/208 Wye **A.I.C. Rating:** 22,000
Supply From: 036-LVT005 **Phases:** 3 **Mains Type:** MCB
Mounting: Surface **Wires:** 4 **Mains Rating:** 225 A
Enclosure: NEMA 1 **MCB Rating:** 225 A

Notes:

CKT	Circuit Description	Trip	Poles	A		B		C		Poles	Trip	Circuit Description	CKT
1	FCU003, STAIR 1; N340	20 A	1	0 kVA	0 kVA					1	20 A	FCU007, ELEC. ROOM; N347	2
3	SK-1, PANTRY/ LOUNGE; N319	20 A	1			1 kVA	1 kVA			1	20 A	EWC-1, ENTRY; C300B	4
5	SK-1, VENDING; C308	20 A	1					1 kVA	1 kVA	1	20 A	EQUIPMENT, WORKSTATIONS; N350	6
7	EQUIPMENT, WORKSTATIONS; N350	20 A	1	1 kVA	1 kVA					1	20 A	EQUIPMENT, WORKSTATIONS; N350	8
9	EQUIPMENT, WORKSTATIONS; N350	20 A	1			1 kVA	1 kVA			1	20 A	EQUIPMENT, WORKSTATIONS; N350	10
11	EQUIPMENT, WORKSTATIONS; N350	20 A	1					1 kVA	1 kVA	1	20 A	EQUIPMENT, WORKSTATIONS; N350	12
13	EQUIPMENT, WORKSTATIONS; N350	20 A	1	1 kVA	1 kVA					1	20 A	EQUIPMENT, WORKSTATIONS; N340	14
15	EQUIPMENT, WORKSTATIONS; N340	20 A	1			1 kVA	1 kVA			1	20 A	EQUIPMENT, WORKSTATIONS; N340	16
17	EQUIPMENT, WORKSTATIONS; N340	20 A	1					1 kVA	1 kVA	1	20 A	EQUIPMENT, WORKSTATIONS; N327	18
19	EQUIPMENT, WORKSTATIONS; N327	20 A	1	1 kVA	1 kVA					1	20 A	EQUIPMENT, WORKSTATIONS; N327	20
21	EQUIPMENT, WORKSTATIONS; N327	20 A	1			1 kVA	1 kVA			1	20 A	EQUIPMENT, WORKSTATIONS; N327	22
23	EQUIPMENT, WORKSTATIONS; N327	20 A	1					1 kVA	1 kVA	1	20 A	EQUIPMENT, WORKSTATIONS; N320	24
25	EQUIPMENT, WORKSTATIONS; N320	20 A	1	1 kVA	1 kVA					1	20 A	EQUIPMENT, WORKSTATIONS; N320	26
27	EQUIPMENT, WORKSTATIONS; N320	20 A	1			1 kVA	1 kVA			1	20 A	EQUIPMENT, WORKSTATIONS; N320	28
29	EQUIPMENT, WORKSTATIONS; N320	20 A	1					1 kVA	1 kVA	1	20 A	EQUIPMENT, WORKSTATIONS; N320	30
31	EQUIPMENT, WORKSTATIONS; N320	20 A	1	1 kVA	1 kVA					1	20 A	EQUIPMENT, WORKSTATIONS; N320	32
33	EQUIPMENT, WORKSTATIONS; N320	20 A	1			1 kVA	1 kVA			1	20 A	EQUIPMENT, WORKSTATIONS; N320	34
35	EQUIPMENT, WORKSTATIONS; N320	20 A	1					1 kVA	1 kVA	1	20 A	EQUIPMENT, WORKSTATIONS; N320	36
37	PANEL 036-PPL3C4B	20 A	3	12 kVA	0 kVA					1	20 A	Spare	38
39	--	--	--			9 kVA	0 kVA			1	20 A	Spare	40
41	--	--	--					9 kVA	0 kVA	1	20 A	Spare	42
			Total Load:	22 kVA		21 kVA		21 kVA					
			Total Amps:	184 A		173 A		174 A					

Legend:

Load Classification	Connected Load	Demand Factor	Estimated Demand	Panel Totals	
Other	43 kVA	100.00%	43 kVA		
				Total Conn. Load:	64 kVA
				Total Est. Demand:	58 kVA
				Total Conn. Current:	177 A
				Total Est. Demand Current:	162 A

Notes:

Branch Panel: 036-PPL3C4B

Location: ELEC ROOM N347 **Volts:** 120/208 Wye **A.I.C. Rating:** 22,000
Supply From: 036-PPL3C4A **Phases:** 3 **Mains Type:** MLO
Mounting: Surface **Wires:** 4 **Mains Rating:** 225 A
Enclosure: NEMA 1 **MCB Rating:** N/A

Notes:

CKT	Circuit Description	Trip	Poles	A		B		C		Poles	Trip	Circuit Description	CKT
1	EQUIPMENT, WORKSTATIONS; N320	20 A	1	1 kVA	1 kVA					1	20 A	EQUIPMENT, OFFICE; S430M	2
3	EQUIPMENT, OFFICE; S430M	20 A	1			1 kVA	1 kVA			1	20 A	EQUIPMENT, OFFICE; S430L	4
5	EQUIPMENT, OFFICE; S430L	20 A	1					1 kVA	0 kVA	1	20 A	EQUIPMENT, WORKSTATIONS; N350	6
7	EQUIPMENT, WORKSTATIONS; N350	20 A	1	0 kVA	0 kVA					1	20 A	EQUIPMENT, WORKSTATIONS; N350	8
9	EQUIPMENT, WORKSTATIONS; N350	20 A	1			0 kVA	0 kVA			1	20 A	EQUIPMENT, WORKSTATIONS; N350	10
11	EQUIPMENT, WORKSTATIONS; N340	20 A	1					1 kVA	0 kVA	1	20 A	EQUIPMENT, CIRCULATION; N300	12
13	EQUIPMENT, WORKSTATIONS; N327	20 A	1	0 kVA	0 kVA					1	20 A	EQUIPMENT, WORKSTATIONS; N327	14
15	EQUIPMENT, CIRCULATION; N300	20 A	1			0 kVA	0 kVA			1	20 A	EQUIPMENT, WORKSTATIONS; N320	16
17	EQUIPMENT, WORKSTATIONS; N320	20 A	1					0 kVA	0 kVA	1	20 A	EQUIPMENT, WORKSTATIONS; N320	18
19	EQUIPMENT, WORKSTATIONS; N320	20 A	1	0 kVA	0 kVA					1	20 A	EQUIPMENT, WORKSTATIONS; N320	20
21	EQUIPMENT, WORKSTATIONS; N320	20 A	1			0 kVA	0 kVA			1	20 A	EQUIPMENT, WORKSTATIONS; N320	22
23	EQUIPMENT, OFFICE; S430M	20 A	1					0 kVA	0 kVA	1	20 A	EQUIPMENT, OFFICE; S430L	24
25	SMALL CONF. ROOM; N341	20 A	1	1 kVA	1 kVA					1	20 A	SMALL CONF. ROOM; N323	26
27	COPY/ SUPPLY; N321	20 A	1			1 kVA	0 kVA			1	20 A	PANTRY/ LOUNGE; N319	28
29	PANTRY/ LOUNGE; N319	20 A	1					0 kVA	0 kVA	1	20 A	PANTRY/ LOUNGE; N319	30
31	COPY/ SUPPLY; N321	20 A	1	0 kVA	0 kVA					1	20 A	COPY/ SUPPLY; N321	32
33	COPY/ SUPPLY; N321	20 A	1			0 kVA	1 kVA			1	20 A	GENERAL, OFFICES; N313, N311	34
35	GENERAL, OFFICES; N311, N309	20 A	1					1 kVA	1 kVA	1	20 A	GENERAL, OFFICES; N349, N351	36
37	PANEL 036-PPL3C4C	20 A	3	6 kVA	0 kVA					1	20 A	Spare	38
39	--	--	--			4 kVA	0 kVA			1	20 A	Spare	40
41	--	--	--					3 kVA	0 kVA	1	20 A	Spare	42
			Total Load:	12 kVA		9 kVA		9 kVA					
			Total Amps:	100 A		78 A		74 A					

Legend:

Load Classification	Connected Load	Demand Factor	Estimated Demand	Panel Totals	
Other	10 kVA	100.00%	10 kVA		
				Total Conn. Load:	30 kVA
				Total Est. Demand:	25 kVA
				Total Conn. Current:	84 A
				Total Est. Demand Current:	69 A

Notes:

Branch Panel: 036-PPL3C4C

Location: ELEC ROOM N347 **Volts:** 120/208 Wye **A.I.C. Rating:** 22,000
Supply From: 036-PPL3C4B **Phases:** 3 **Mains Type:** MLO
Mounting: Surface **Wires:** 4 **Mains Rating:** 100 A
Enclosure: NEMA 1 **MCB Rating:** N/A

Notes:

CKT	Circuit Description	Trip	Poles	A		B		C		Poles	Trip	Circuit Description	CKT
1	CORRIDORS; N350, N300	20 A	1	1 kVA	1 kVA					1	20 A	CORRIDORS; N300, N320, N350	2
3	VENDING; C308	20 A	1			1 kVA	1 kVA			1	20 A	GENERAL CORE; C308, C307	4
5	GENERAL CORE; S430N, C300	20 A	1					1 kVA	1 kVA	1	20 A	GENERAL CORE; C306, C303, C305, C304	6
7	WIREMOLD, PANTRY/ LOUNGE; N319	20 A	1	1 kVA	1 kVA					1	20 A	WIREMOLD, PANTRY/ LOUNGE; N319	8
9	ELEC. ROOM; N347	20 A	1			0 kVA	1 kVA			1	20 A	STORAGE; N315	10
11	GENERAL OFFICE; N302	20 A	1					0 kVA	0 kVA	1	20 A	GENERAL OFFICE; N302	12
13	GENERAL, CONF. ROOM; N307	20 A	1	1 kVA	1 kVA					1	20 A	GENERAL, CONF. ROOM; N307	14
15	GENERAL, CONF. ROOM; N307	20 A	1			0 kVA	0 kVA			1	20 A	GENERAL, CONF. ROOM; N307	16
17	GENERAL, CONF. ROOM; N307	20 A	1					0 kVA	0 kVA	1	20 A	GENERAL, CONF. ROOM; N307	18
19	GENERAL, CONF. ROOM; N307	20 A	1	0 kVA	1 kVA					1	20 A	PROJECTION SCREEN, CONF. ROOM; N307	20
21	PROJECTOR, CONF. ROOM; N307	20 A	1			1 kVA	0 kVA			1	20 A	Receptacle PANTRY/ LOUNGE N319	22
23	Spare	20 A	1					0 kVA	0 kVA	1	20 A	Receptacle PANTRY/ LOUNGE N319	24
25	Spare	20 A	1	0 kVA	0 kVA					1	20 A	Spare	26
27	Spare	20 A	1			0 kVA	0 kVA			1	20 A	Spare	28
29	Spare	20 A	1					0 kVA	0 kVA	1	20 A	Spare	30
31	Spare	20 A	1	0 kVA	0 kVA					1	20 A	Spare	32
33	Spare	20 A	1			0 kVA	0 kVA			1	20 A	Spare	34
35	Spare	20 A	1					0 kVA	0 kVA	1	20 A	Spare	36
37	Spare	20 A	1	0 kVA	0 kVA					1	20 A	Spare	38
39	Spare	20 A	1			0 kVA	0 kVA			1	20 A	Spare	40
41	Spare	20 A	1					0 kVA	0 kVA	1	20 A	Spare	42
			Total Load:	6 kVA		4 kVA		3 kVA					
			Total Amps:	53 A		34 A		29 A					

Legend:

Load Classification	Connected Load	Demand Factor	Estimated Demand	Panel Totals	
Other	4 kVA	100.00%	4 kVA		
				Total Conn. Load:	14 kVA
				Total Est. Demand:	14 kVA
				Total Conn. Current:	39 A
				Total Est. Demand Current:	39 A

Notes:

Branch Panel: 036-PPL4B15A

Location: ELEC ROOM S447 **Volts:** 120/208 Wye **A.I.C. Rating:** 22,000
Supply From: 036-LVT008 **Phases:** 3 **Mains Type:** MCB
Mounting: Surface **Wires:** 4 **Mains Rating:** 225 A
Enclosure: NEMA 1 **MCB Rating:** 225 A

Notes:

CKT	Circuit Description	Trip	Poles	A		B		C		Poles	Trip	Circuit Description	CKT
1	FCU016, ELEC. ROOM; S447	20 A	1	0 kVA	0 kVA					1	20 A	FCU012, STAIR 2; S440	2
3	SK-1, PANTRY/ LOUNGE; S419	20 A	1			1 kVA	0 kVA			1	20 A	FCU020, TELECOM; C415	4
5	GENERAL OFFICE; S430O	20 A	1					0 kVA	1 kVA	1	20 A	EQUIPMENT, WORKSTATIONS; S450	6
7	EQUIPMENT, WORKSTATIONS; S450	20 A	1	1 kVA	1 kVA					1	20 A	EQUIPMENT, WORKSTATIONS; S450	8
9	EQUIPMENT, WORKSTATIONS; S450	20 A	1			1 kVA	1 kVA			1	20 A	EQUIPMENT, WORKSTATIONS; S450	10
11	EQUIPMENT, WORKSTATIONS; S450	20 A	1					1 kVA	1 kVA	1	20 A	EQUIPMENT, WORKSTATIONS; S450	12
13	EQUIPMENT, WORKSTATIONS; S450	20 A	1	1 kVA	1 kVA					1	20 A	EQUIPMENT, WORKSTATIONS; S450	14
15	EQUIPMENT, WORKSTATIONS; S450	20 A	1			1 kVA	0 kVA			1	20 A	EQUIPMENT, OFFICE; S430O	16
17	EQUIPMENT, WORKSTATIONS; S450	20 A	1					0 kVA	0 kVA	1	20 A	EQUIPMENT, WORKSTATIONS; S450	18
19	EQUIPMENT, WORKSTATIONS; S450	20 A	1	0 kVA	0 kVA					1	20 A	EQUIPMENT, WORKSTATIONS; S450	20
21	EQUIPMENT, WORKSTATIONS; S450	20 A	1			0 kVA	0 kVA			1	20 A	GENERAL OFFICE; S402	22
23	EQUIPMENT, WORKSTATIONS; S420	20 A	1					1 kVA	1 kVA	1	20 A	EQUIPMENT, WORKSTATIONS; S420	24
25	EQUIPMENT, WORKSTATIONS; S420	20 A	1	1 kVA	1 kVA					1	20 A	EQUIPMENT, WORKSTATIONS; S420	26
27	EQUIPMENT, WORKSTATIONS; S420	20 A	1			1 kVA	1 kVA			1	20 A	EQUIPMENT, WORKSTATIONS; S420	28
29	EQUIPMENT, WORKSTATIONS; S420	20 A	1					1 kVA	1 kVA	1	20 A	EQUIPMENT, WORKSTATIONS; S420	30
31	EQUIPMENT, WORKSTATIONS; S420	20 A	1	1 kVA	1 kVA					1	20 A	EQUIPMENT, WORKSTATIONS; S420	32
33	EQUIPMENT, WORKSTATIONS; S420	20 A	1			1 kVA	1 kVA			1	20 A	EQUIPMENT, WORKSTATIONS; S420	34
35	GENERAL, SECRETARY; S430A	20 A	1					1 kVA	1 kVA	1	20 A	GENERAL, SECRETARY; S430A	36
37	PANEL 036-PPL4B15B	20 A	3	13 kVA	1 kVA					1	20 A	Receptacle PANTRY/ LOUNGE S419	38
39	--	--	--			12 kVA	0 kVA			1	20 A	Receptacle PANTRY/ LOUNGE S419	40
41	--	--	--					10 kVA	0 kVA	1	20 A	Spare	42
			Total Load:	23 kVA		21 kVA		20 kVA					
			Total Amps:	190 A		175 A		165 A					

Legend:

Load Classification	Connected Load	Demand Factor	Estimated Demand	Panel Totals	
Other	44 kVA	100.00%	44 kVA		
				Total Conn. Load:	64 kVA
				Total Est. Demand:	59 kVA
				Total Conn. Current:	176 A
				Total Est. Demand Current:	163 A

Notes:

Branch Panel: 036-PPL4B15B

Location: ELEC ROOM S447 **Volts:** 120/208 Wye **A.I.C. Rating:** 22,000
Supply From: 036-PPL4B15A **Phases:** 3 **Mains Type:** MLO
Mounting: Surface **Wires:** 4 **Mains Rating:** 225 A
Enclosure: NEMA 1 **MCB Rating:** N/A

Notes:

CKT	Circuit Description	Trip	Poles	A		B		C		Poles	Trip	Circuit Description	CKT
1	EQUIPMENT, OFFICE; S402	20 A	1	0 kVA	0 kVA					1	20 A	EQUIPMENT, WORKSTATIONS; S420	2
3	EQUIPMENT, WORKSTATIONS; S420	20 A	1			0 kVA	0 kVA			1	20 A	EQUIPMENT, WORKSTATIONS; S420	4
5	EQUIPMENT, WORKSTATIONS; S420	20 A	1					0 kVA	0 kVA	1	20 A	EQUIPMENT, WORKSTATIONS; S420	6
7	EQUIPMENT, WORKSTATIONS; S420	20 A	1	0 kVA	1 kVA					1	20 A	GENERAL, OFFICE; S430A, S420	8
9	EQUIPMENT, OFFICE; S430F	20 A	1			1 kVA	0 kVA			1	20 A	EQUIPMENT, OFFICE; S430E	10
11	EQUIPMENT, OFFICE; S430D	20 A	1					0 kVA	0 kVA	1	20 A	EQUIPMENT, OFFICE; S430C	12
13	EQUIPMENT, OFFICE; S430B	20 A	1	0 kVA	0 kVA					1	20 A	GENERAL, SECRETARY; S430G	14
15	EQUIPMENT, SECRETARY; S430G	20 A	1			1 kVA	1 kVA			1	20 A	EQUIPMENT, SECRETARY; S430G	16
17	LIBRARY; S430I	20 A	1					1 kVA	1 kVA	1	20 A	COPY/ SUPPLY; S421	18
19	COPY/ SUPPLY; S421	20 A	1	0 kVA	0 kVA					1	20 A	COPY/ SUPPLY; S421	20
21	COPY/ SUPPLY; S421	20 A	1			0 kVA	0 kVA			1	20 A	PANTRY/ LOUNGE; S419	22
23	PANTRY/ LOUNGE; S419	20 A	1					0 kVA	0 kVA	1	20 A	PANTRY/ LOUNGE; S419	24
25	STORAGE; S415	20 A	1	1 kVA	1 kVA					1	20 A	GENERAL, OFFICES; S411, S413	26
27	GENERAL, OFFICES; S449, S451	20 A	1			1 kVA	1 kVA			1	20 A	GENERAL, OFFICE; S409	28
29	WIREMOLD, PANTRY/ LOUNGE; S419	20 A	1					1 kVA	1 kVA	1	20 A	WIREMOLD, PANTRY/ LOUNGE; S419	30
31	GENERAL, CONF. ROOM; S407	20 A	1	1 kVA	0 kVA					1	20 A	GENERAL, CONF. ROOM; S407	32
33	GENERAL, CONF. ROOM; S407	20 A	1			0 kVA	1 kVA			1	20 A	GENERAL, CONF. ROOM; S407	34
35	Spare	20 A	1					0 kVA	0 kVA	1	20 A	Spare	36
37	PANEL 036-PPL4B15C	20 A	3	8 kVA	0 kVA					1	20 A	Spare	38
39	--	--	--			6 kVA	0 kVA			1	20 A	Spare	40
41	--	--	--					6 kVA	0 kVA	1	20 A	Spare	42
			Total Load:	13 kVA		12 kVA		10 kVA					
			Total Amps:	109 A		98 A		84 A					

Legend:

Load Classification	Connected Load	Demand Factor	Estimated Demand	Panel Totals	
Other	19 kVA	100.00%	19 kVA		
				Total Conn. Load:	35 kVA
				Total Est. Demand:	32 kVA
				Total Conn. Current:	97 A
				Total Est. Demand Current:	88 A

Notes:

100% SUBMITTAL

NORTH

AECOM

AECOM TECHNICAL SERVICES, INC.
3101 WILSON BOULEVARD
SUITE 900
ARLINGTON, VA 22201

T: 703-682-4900 F: 703.682.4901
www.aecom.com

SEAL AREA

STATE OF MARYLAND
JIEER REN
No. 40964
PROFESSIONAL ENGINEER
10-11-2012

KEY PLAN

REV	DATE	DESCRIPTION	S&R BR.	CUSTOMER	PM	SECT. HEAD

	INITIALS	DATE
DRAWN BY	LB/BF	
CHECKED BY	JR/MM	
A-E MANAGER	EW	
ENVIRONMENTAL BRANCH	JH	
SAFETY BRANCH	CS	
CM	MMD	
PM	RWP	
CUSTOMER	JWB	
ENG. BRANCH	DGL	

ELECTRICAL PANEL SCHEDULES

E-905

FLIGHT PROJECTS BUILDING

NATIONAL AERONAUTICS AND SPACE ADMINISTRATION
GODDARD SPACE FLIGHT CENTER GREENBELT, MARYLAND
FACILITIES MANAGEMENT DIVISION

DATE ISSUED	CoF CODE OR WR#	AECOM PROJECT NO.	SCALE
10/12/2012	12GXAZ	60187636	

FILE DATE: 10/11/2012 2:15:27 PM

Branch Panel: 036-PPL4B15C

Location: ELEC ROOM S447 **Supply From:** 036-PPL4B15B **Mounting:** Surface **Enclosure:** NEMA 1
Volts: 120/208 Wye **Phases:** 3 **Wires:** 4
A.I.C. Rating: 22,000 **Mains Type:** MLO **Mains Rating:** 225 A **MCB Rating:** N/A

Notes:

CKT	Circuit Description	Trip	Poles	A		B		C		Poles	Trip	Circuit Description	CKT
1	CORRIDORS; S420, S400, S450	20 A	1	1 kVA	1 kVA					1	20 A	ENTRY; C400A	2
3	CORRIDORS; S440, S400	20 A	1			1 kVA	0 kVA			1	20 A	ELEC. ROOM; S447	4
5	GENERAL, CONF. ROOM; C402	20 A	1					1 kVA	1 kVA	1	20 A	EQUIPMENT, OFFICE; S430F	6
7	EQUIPMENT, OFFICE; S430F	20 A	1	1 kVA	1 kVA					1	20 A	EQUIPMENT, OFFICE; S430E	8
9	EQUIPMENT, OFFICE; S430E	20 A	1			1 kVA	1 kVA			1	20 A	EQUIPMENT, OFFICE; S430D	10
11	EQUIPMENT, OFFICE; S430D	20 A	1					1 kVA	1 kVA	1	20 A	EQUIPMENT, OFFICE; S430C	12
13	EQUIPMENT, OFFICE; S430C	20 A	1	1 kVA	1 kVA					1	20 A	EQUIPMENT, OFFICE; S430B	14
15	EQUIPMENT, OFFICE; S430B	20 A	1			1 kVA	1 kVA			1	20 A	Other CONF ROOM S407	16
17	Other CONF ROOM S407	20 A	1					1 kVA	1 kVA	1	20 A	Other CONF ROOM S407	18
19	Other CONF ROOM S407	20 A	1	1 kVA	0 kVA					1	20 A	Receptacle CONF ROOM S407	20
21	Spare	20 A	1			0 kVA	0 kVA			1	20 A	Spare	22
23	Spare	20 A	1					0 kVA	0 kVA	1	20 A	Spare	24
25	Spare	20 A	1	0 kVA	0 kVA					1	20 A	Spare	26
27	Spare	20 A	1			0 kVA	0 kVA			1	20 A	Spare	28
29	Spare	20 A	1					0 kVA	0 kVA	1	20 A	Spare	30
31	Spare	20 A	1	0 kVA	0 kVA					1	20 A	Spare	32
33	Spare	20 A	1			0 kVA	0 kVA			1	20 A	Spare	34
35	Spare	20 A	1					0 kVA	0 kVA	1	20 A	Spare	36
37	Spare	20 A	1	0 kVA	0 kVA					1	20 A	Spare	38
39	Spare	20 A	1			0 kVA	0 kVA			1	20 A	Spare	40
41	Spare	20 A	1					0 kVA	0 kVA	1	20 A	Spare	42
			Total Load:	8 kVA		6 kVA		6 kVA					
			Total Amps:	64 A		47 A		51 A					

Legend:

Load Classification	Connected Load	Demand Factor	Estimated Demand	Panel Totals	
Other	14 kVA	100.00%	14 kVA		
				Total Conn. Load:	19 kVA
				Total Est. Demand:	19 kVA
				Total Conn. Current:	54 A
				Total Est. Demand Current:	54 A

Notes:

Branch Panel: 036-PPL4C4A

Location: ELEC ROOM N447 **Supply From:** 036-LVT007 **Mounting:** Surface **Enclosure:** NEMA 1
Volts: 120/208 Wye **Phases:** 3 **Wires:** 4
A.I.C. Rating: 22,000 **Mains Type:** MCB **Mains Rating:** 225 A **MCB Rating:** 225 A

Notes:

CKT	Circuit Description	Trip	Poles	A		B		C		Poles	Trip	Circuit Description	CKT
1	FCU004, STAIR 1; N440	20 A	1	0 kVA	0 kVA					1	20 A	FCU008, ELEC. ROOM; N447	2
3	SK-1, PANTRY/ LOUNGE; N419	20 A	1			1 kVA	1 kVA			1	20 A	EWC-1, ENTRY; C400B	4
5	SK-1, VENDING; C408	20 A	1					1 kVA	1 kVA	1	20 A	EQUIPMENT, OFFICE; N456	6
7	EQUIPMENT, OFFICE; N456	20 A	1	1 kVA	1 kVA					1	20 A	EQUIPMENT, OFFICE; N456	8
9	EQUIPMENT, OFFICE; N456	20 A	1			1 kVA	1 kVA			1	20 A	EQUIPMENT, OFFICE; N456	10
11	EQUIPMENT, OFFICE; N456	20 A	1					1 kVA	1 kVA	1	20 A	EQUIPMENT, OFFICE; N456	12
13	EQUIPMENT, OFFICE; N456	20 A	1	1 kVA	1 kVA					1	20 A	EQUIPMENT, OFFICE; N456	14
15	EQUIPMENT, OFFICE; N456	20 A	1			1 kVA	1 kVA			1	20 A	EQUIPMENT, WORKSTATIONS; N440-1	16
17	EQUIPMENT, WORKSTATIONS; N440-1	20 A	1					1 kVA	1 kVA	1	20 A	EQUIPMENT, WORKSTATIONS; N440-1	18
19	EQUIPMENT, WORKSTATIONS; N440-1	20 A	1	1 kVA	1 kVA					1	20 A	EQUIPMENT, WORKSTATIONS; N427-1	20
21	EQUIPMENT, WORKSTATIONS; N427-1	20 A	1			1 kVA	1 kVA			1	20 A	EQUIPMENT, WORKSTATIONS; N427-1	22
23	EQUIPMENT, WORKSTATIONS; N427-1	20 A	1					1 kVA	1 kVA	1	20 A	EQUIPMENT, WORKSTATIONS; N420-1	24
25	EQUIPMENT, WORKSTATIONS; N420-1	20 A	1	1 kVA	1 kVA					1	20 A	EQUIPMENT, WORKSTATIONS; N420-1	26
27	EQUIPMENT, WORKSTATIONS; N420-1	20 A	1			1 kVA	1 kVA			1	20 A	EQUIPMENT, WORKSTATIONS; N420-1	28
29	EQUIPMENT, WORKSTATIONS; N420-1	20 A	1					1 kVA	1 kVA	1	20 A	EQUIPMENT, WORKSTATIONS; N420-1	30
31	EQUIPMENT, WORKSTATIONS; N420-1	20 A	1	1 kVA	1 kVA					1	20 A	EQUIPMENT, WORKSTATIONS; N420-1	32
33	EQUIPMENT, WORKSTATIONS; N420-1	20 A	1			1 kVA	1 kVA			1	20 A	EQUIPMENT, WORKSTATIONS; N420-1	34
35	EQUIPMENT, WORKSTATIONS; N420-1	20 A	1					1 kVA	1 kVA	1	20 A	EQUIPMENT, WORKSTATIONS; N420-1	36
37	PANEL 036-PPL4C4B	20 A	3	11 kVA	0 kVA					1	20 A	Spare	38
39	--	--	--			9 kVA	0 kVA			1	20 A	Spare	40
41	--	--	--					10 kVA	0 kVA	1	20 A	Spare	42
			Total Load:	21 kVA		21 kVA		22 kVA					
			Total Amps:	178 A		173 A		183 A					

Legend:

Load Classification	Connected Load	Demand Factor	Estimated Demand	Panel Totals	
Other	41 kVA	100.00%	41 kVA		
				Total Conn. Load:	64 kVA
				Total Est. Demand:	58 kVA
				Total Conn. Current:	178 A
				Total Est. Demand Current:	160 A

Notes:

Branch Panel: 036-PPL4C4B

Location: ELEC ROOM N447 **Supply From:** 036-PPL4C4A **Mounting:** Surface **Enclosure:** NEMA 1
Volts: 120/208 Wye **Phases:** 3 **Wires:** 4
A.I.C. Rating: 22,000 **Mains Type:** MLO **Mains Rating:** 225 A **MCB Rating:** N/A

Notes:

CKT	Circuit Description	Trip	Poles	A		B		C		Poles	Trip	Circuit Description	CKT
1	EQUIPMENT, WORKSTATIONS; N420-1	20 A	1	1 kVA	1 kVA					1	20 A	EQUIPMENT, WORKSTATIONS; N420-1	2
3	EQUIPMENT, WORKSTATIONS; N420-1	20 A	1			1 kVA	0 kVA			1	20 A	EQUIPMENT, OFFICE; N456	4
5	EQUIPMENT, OFFICE; N456	20 A	1					0 kVA	0 kVA	1	20 A	EQUIPMENT, OFFICE; N456	6
7	EQUIPMENT, OFFICE' N456	20 A	1	0 kVA	0 kVA					1	20 A	EQUIPMENT, WORKSTATIONS; N440-1	8
9	EQUIPMENT, WORKSTATIONS; N440-1	20 A	1			0 kVA	0 kVA			1	20 A	EQUIPMENT, WORKSTATIONS; N427-1	10
11	EQUIPMENT, WORKSTATIONS; N427-1	20 A	1					0 kVA	0 kVA	1	20 A	EQUIPMENT, WORKSTATIONS; N427-1	12
13	EQUIPMENT, WORKSTATIONS; N420-1	20 A	1	0 kVA	0 kVA					1	20 A	EQUIPMENT, WORKSTATIONS; N420-1	14
15	EQUIPMENT, WORKSTATIONS; N420-1	20 A	1			0 kVA	0 kVA			1	20 A	EQUIPMENT, WORKSTATIONS; N420-1	16
17	EQUIPMENT, WORKSTATIONS; N420-1	20 A	1					0 kVA	0 kVA	1	20 A	EQUIPMENT, WORKSTATIONS; N420-1	18
19	EQUIPMENT, WORKSTATIONS; N420-1	20 A	1	0 kVA	0 kVA					1	20 A	EQUIPMENT, OFFICE; N402	20
21	GENERAL, OFFICES; N420-1, N402	20 A	1			1 kVA	1 kVA			1	20 A	GENERAL, OFFICES; N458, N456	22
23	EQUIPMENT, OFFICE; N458	20 A	1					0 kVA	1 kVA	1	20 A	SMALL CONF. ROOM; N441	24
25	SMALL CONF. ROOM; N423	20 A	1	1 kVA	1 kVA					1	20 A	COPY/ SUPPLY; N421	26
27	COPY/ SUPPLY; N421	20 A	1			0 kVA	0 kVA			1	20 A	COPY/ SUPPLY; N421	28
29	COPY/ SUPPLY; N421	20 A	1					0 kVA	0 kVA	1	20 A	PANTRY/ LOUNGE; N419	30
31	PANTRY/ LOUNGE; N419	20 A	1	0 kVA	0 kVA					1	20 A	PANTRY/ LOUNGE; N419	32
33	GENERAL, OFFICES; N409, N411	20 A	1			1 kVA	1 kVA			1	20 A	GENERAL, OFFICES; N451, N449	34
35	GENERAL, OFFICES; N413, N411	20 A	1					1 kVA	1 kVA	1	20 A	Receptacle PANTRY/ LOUNGE N419	36
37	PANEL 036-PPL4C4C	20 A	3	5 kVA	1 kVA					1	20 A	Receptacle PANTRY/ LOUNGE N419	38
39	--	--	--			3 kVA	0 kVA			1	20 A	Spare	40
41	--	--	--					5 kVA	0 kVA	1	20 A	Spare	42
			Total Load:	11 kVA		9 kVA		10 kVA					
			Total Amps:	94 A		77 A		83 A					

Legend:

Load Classification	Connected Load	Demand Factor	Estimated Demand	Panel Totals	
Other	8 kVA	100.00%	8 kVA		
				Total Conn. Load:	30 kVA
				Total Est. Demand:	24 kVA
				Total Conn. Current:	84 A
				Total Est. Demand Current:	67 A

Notes:

Branch Panel: 036-PPL4C4C

Location: ELEC ROOM N447 **Supply From:** 036-PPL4C4B **Mounting:** Surface **Enclosure:** NEMA 1
Volts: 120/208 Wye **Phases:** 3 **Wires:** 4
A.I.C. Rating: 22,000 **Mains Type:** MLO **Mains Rating:** 225 A **MCB Rating:** N/A

Notes:

CKT	Circuit Description	Trip	Poles	A		B		C		Poles	Trip	Circuit Description	CKT
1	CORRIDORS; N440-1, N456, N400-1, N440	20 A	1	1 kVA	1 kVA					1	20 A	CORRIDORS; N400-1	2
3	GENERAL CORE; C400, 384	20 A	1			1 kVA	1 kVA			1	20 A	VENDING; C408	4
5	GENERAL CORE; C408, C407-1	20 A	1					1 kVA	1 kVA	1	20 A	GENERAL CORE; C406, C403, C405, C404	6
7	STORAGE; N415	20 A	1	1 kVA	0 kVA					1	20 A	GENERAL, ELEC. ROOM; N447	8
9	WIREMOLD, PANTRY/ LOUNGE; N419	20 A	1			1 kVA	1 kVA			1	20 A	WIREMOLD, PANTRY/ LOUNGE; N419	10
11	GENERAL, CONF. ROOM; N407	20 A	1					1 kVA	0 kVA	1	20 A	GENERAL, CONF. ROOM; N407	12
13	GENERAL, CONF. ROOM; N407	20 A	1	0 kVA	0 kVA					1	20 A	GENERAL, CONF. ROOM; N407	14
15	GENERAL, CONF. ROOM; N407	20 A	1			0 kVA	0 kVA			1	20 A	GENERAL, CONF. ROOM; N407	16
17	GENERAL, CONF. ROOM; N407	20 A	1					1 kVA	1 kVA	1	20 A	PROJECTION SCREEN, CONF. ROOM; N407	18
19	PROJECTOR, CONF. ROOM; N407	20 A	1	1 kVA	0 kVA					1	20 A	Spare	20
21	Spare	20 A	1			0 kVA	0 kVA			1	20 A	Spare	22
23	Spare	20 A	1					0 kVA	0 kVA	1	20 A	Spare	24
25	Spare	20 A	1	0 kVA	0 kVA					1	20 A	Spare	26
27	Spare	20 A	1			0 kVA	0 kVA			1	20 A	Spare	28
29	Spare	20 A	1					0 kVA	0 kVA	1	20 A	Spare	30
31	Spare	20 A	1	0 kVA	0 kVA					1	20 A	Spare	32
33	Spare	20 A	1			0 kVA	0 kVA			1	20 A	Spare	34
35	Spare	20 A	1					0 kVA	0 kVA	1	20 A	Spare	36
37	Spare	20 A	1	0 kVA	0 kVA					1	20 A	Spare	38
39	Spare	20 A	1			0 kVA	0 kVA			1	20 A	Spare	40
41	Spare	20 A	1					0 kVA	0 kVA	1	20 A	Spare	42
			Total Load:	5 kVA		3 kVA		5 kVA					
			Total Amps:	38 A		29 A		41 A					

Legend:

Load Classification	Connected Load	Demand Factor	Estimated Demand	Panel Totals	
Other	4 kVA	100.00%	4 kVA		
				Total Conn. Load:	13 kVA
				Total Est. Demand:	13 kVA
				Total Conn. Current:	36 A
				Total Est. Demand Current:	36 A

Notes:

Branch Panel: 036-PPL5B9

Location: PENTHOUSE C500 **Supply From:** 036-LVT009 **Mounting:** Surface **Enclosure:** NEMA 1
Volts: 120/208 Wye **Phases:** 3 **Wires:** 4
A.I.C. Rating: 22,000 **Mains Type:** MCB **Mains Rating:** 150 A **MCB Rating:** 150 A

Notes:

CKT	Circuit Description	Trip	Poles	A		B		C		Poles	Trip	Circuit Description	CKT
1	EXH003; ROOF	20 A	1	1 kVA	1 kVA					1	20 A	EXH002; ROOF	2
3	HUH002; ROOF	20 A	1			2 kVA	2 kVA			1	20 A	HUH001; ROOF	4
5	GENERAL PENTHOUSE	20 A	1					1 kVA	1 kVA	1	20 A	GENERAL PENTHOUSE	6
7	ELEV. CAB LIGHTS; PENTHOUSE	20 A	1	0 kVA	1 kVA					1	20 A	GENERAL PENTHOUSE	8
9	DOOR HARDWARE; ROOF ACCESS DOOR	20 A	1			0 kVA	0 kVA			1	20 A	ELEV. CAB LIGHTS; PENTHOUSE	10
11	FCU021; PENTHOUSE	20 A	1					0 kVA	0 kVA	1	20 A	DOOR HARDWARE; ROOF ACCESS DOOR	12
13	Spare	20 A	1	0 kVA	0 kVA					1	20 A	Spare	14
15	Spare	20 A	1			0 kVA	0 kVA			1	20 A	Spare	16
17	Spare	20 A	1					0 kVA	0 kVA	1	20 A	Spare	18
19	Spare	20 A	1	0 kVA	0 kVA					1	20 A	Spare	20
21	Spare	20 A	1			0 kVA	0 kVA			1	20 A	Spare	22
23	Spare	20 A	1					0 kVA	0 kVA	1	20 A	Spare	24
25	Spare	20 A	1	0 kVA	0 kVA					1	20 A	Spare	26
27	Spare	20 A	1			0 kVA	0 kVA			1	20 A	Spare	28
29	Spare	20 A	1					0 kVA	0 kVA	1	20 A	Spare	30
31	Spare	20 A	1	0 kVA	0 kVA					1	20 A	Spare	32
33	Spare	20 A	1			0 kVA	0 kVA			1	20 A	Spare	34
35	Spare	20 A	1					0 kVA	0 kVA	1	20 A	Spare	36
37	Spare	20 A	1	0 kVA	0 kVA					1	20 A	Spare	38
39	Spare	20 A	1			0 kVA	0 kVA			1	20 A	Spare	40
41	Spare	20 A	1					0 kVA	0 kVA	1	20 A	Spare	42
			Total Load:	3 kVA		4 kVA		2 kVA					
			Total Amps:	27 A		32 A		18 A					

Legend:

Load Classification	Connected Load	Demand Factor	Estimated Demand	Panel Totals	
Other	6 kVA	100.00%	6 kVA		
Receptacle	3 kVA	100.00%	3 kVA	**Total Conn. Load:**	9 kVA
				Total Est. Demand:	9 kVA
				Total Conn.:	26 A
				Total Est. Demand:	26 A

Notes:

Branch Panel: 036-PPL1B15C

Location: ELEC ROOM S147 **Supply From:** 036-PPL1B15B **Mounting:** Surface **Enclosure:** NEMA 1
Volts: 120/208 Wye **Phases:** 3 **Wires:** 4
A.I.C. Rating: 22,000 **Mains Type:** MLO **Mains Rating:** 225 A **MCB Rating:** N/A

Notes:

CKT	Circuit Description	Trip	Poles	A		B		C		Poles	Trip	Circuit Description	CKT
1	CORRIDORS; S140, S100	20 A	1	1 kVA	1 kVA					1	20 A	CORRIDORS; S100, S120, S150	2
3	GENERAL, TELECOM; C115	20 A	1			1 kVA	0 kVA			1	20 A	GENERAL EXTERIOR	4
5	EQUIPMENT, OFFICE; S130B	20 A	1					1 kVA	1 kVA	1	20 A	EQUIPMENT, OFFICE; S130B	6
7	EQUIPMENT, OFFICE; S130C	20 A	1	1 kVA	1 kVA					1	20 A	EQUIPMENT, OFFICE; S130C	8
9	EQUIPMENT, OFFICE; S130D	20 A	1			1 kVA	1 kVA			1	20 A	EQUIPMENT, OFFICE; S130D	10
11	EQUIPMENT, OFFICE; S130E	20 A	1					1 kVA	1 kVA	1	20 A	EQUIPMENT, OFFICE; S130E	12
13	EQUIPMENT, OFFICE; S130F	20 A	1	1 kVA	1 kVA					1	20 A	EQUIPMENT, OFFICE; S130F	14
15	EQUIPMENT, OFFICE; S130G	20 A	1			1 kVA	1 kVA			1	20 A	EQUIPMENT, OFFICE; S130G	16
17	GENERAL, OFFICE; S130B	20 A	1					0 kVA	0 kVA	1	20 A	GENERAL, OFFICE; S130C	18
19	GENERAL, OFFICE; S130D	20 A	1	0 kVA	0 kVA					1	20 A	GENERAL, OFFICE; S130E	20
21	GENERAL, OFFICE; S130F	20 A	1			0 kVA	1 kVA			1	20 A	GENERAL, OFFICE; S130G	22
23	GENERAL, CONF. ROOM; S107	20 A	1					1 kVA	1 kVA	1	20 A	PROJECTOR, CONF. ROOM; S107	24
25	PROJECTOR, CONF. ROOM; S107	20 A	1	1 kVA	1 kVA					1	20 A	PROJECTION SCREEN, CONF. ROOM; S107	26
27	PROJECTION SCREEN, CONF. ROOM; S107	20 A	1			1 kVA	0 kVA			1	20 A	GENERAL, CONF. ROOM; S107	28
29	GENERAL EXTERIOR	20 A	1					0 kVA	0 kVA	1	20 A	GENERAL EXTERIOR	30
31	GENERAL EXTERIOR	20 A	1	0 kVA	0 kVA					1	20 A	GENERAL EXTERIOR	32
33	DOOR HARDWARE; C100	20 A	1			0 kVA	0 kVA			1	20 A	DOOR HARDWARE; C102	34
35	DOOR HARDWARE; S140	20 A	1					0 kVA	0 kVA	1	20 A	Spare	36
37	Spare	20 A	1	0 kVA	0 kVA					1	20 A	Spare	38
39	Spare	20 A	1			0 kVA	0 kVA			1	20 A	Spare	40
41	Spare	20 A	1					0 kVA	0 kVA	1	20 A	Spare	42
			Total Load:	9 kVA		7 kVA		8 kVA					
			Total Amps:	79 A		60 A		63 A					

Legend:

Load Classification	Connected Load	Demand Factor	Estimated Demand	Panel Totals	
Other	17 kVA	100.00%	17 kVA		
				Total Conn. Load:	24 kVA
				Total Est. Demand:	24 kVA
				Total Conn. Current:	67 A
				Total Est. Demand Current:	67 A

Notes:

100% SUBMITTAL

NORTH

AECOM
AECOM TECHNICAL SERVICES, INC.
3101 WILSON BOULEVARD
SUITE 900
ARLINGTON, VA 22201
T: 703-682-4900 F: 703.682.4901
www.aecom.com

SEAL AREA

STATE OF MARYLAND JIEER REN No. 40964 PROFESSIONAL ENGINEER 10-11-2012

KEY PLAN

REV	DATE	DESCRIPTION	S&R BR.	CUSTOMER	PM	SECT. HEAD

	INITIALS	DATE
DRAWN BY	LB/BF	
CHECKED BY	JR/MM	
A-E MANAGER	EW	
ENVIRONMENTAL BRANCH	JH	
SAFETY BRANCH	CS	
CM	MMD	
PM	RWP	
CUSTOMER	JWB	
ENG. BRANCH	DGL	

ELECTRICAL PANEL SCHEDULES

E-906

FLIGHT PROJECTS BUILDING

NATIONAL AERONAUTICS AND SPACE ADMINISTRATION
GODDARD SPACE FLIGHT CENTER GREENBELT, MARYLAND
FACILITIES MANAGEMENT DIVISION

DATE ISSUED	CoF CODE OR WR#	AECOM PROJECT NO.	SCALE
10/12/2012	12GXAZ	60187636	

FILE DATE: 10/11/2012 2:15:28 PM

LCR001/LCR00

Location: SWITCHGEAR/ ELECTRICAL **Volts:** 480/277 Wye **A.I.C. Rating:** 45,000
Supply From: **Phases:** 3 **Mains Type:** SEE ONE-LINE
Mounting: FLOOR **Wires:** 4 **Mains Rating:** 2000 A
Enclosure: NEMA 1 **MCB Rating:** 2000 A

Notes:

CKT	Circuit Description	# of Poles	Frame Size	Trip Rating	Load	Remarks
1	036-SWB001	3	1200 A	1200 A	446 kVA	
2	036-SWB002	3	1200 A	1200 A	437 kVA	
3						
4						
5						
6						
7						
8						
9						
10						
				Total Conn. Load:	883 kVA	
				Total Amps:	1061 A	

Legend:

Load Classification	Connected Load	Demand Factor	Estimated Demand	Panel Totals	
Lighting	116 kVA	125.00%	145 kVA		
Lighting 2	2 kVA	125.00%	2 kVA	**Total Conn. Load:**	883 kVA
Other	552 kVA	100.00%	552 kVA	**Total Est. Demand:**	819 kVA
Power	14 kVA	100.00%	14 kVA	**Total Conn.:**	1061 A
Receptacle	197 kVA	52.54%	103 kVA	**Total Est. Demand:**	985 A
Spare	2 kVA	100.00%	2 kVA		

Notes:

Branch Panel: 036-PPH1A8B

Location: SWITCHGEAR/ ELECTRICAL **Volts:** 480/277 Wye **A.I.C. Rating:** 45,000
Supply From: 036-SWB001 **Phases:** 3 **Mains Type:** MCB
Mounting: Surface **Wires:** 4 **Mains Rating:** 250 A
Enclosure: NEMA 1 **MCB Rating:** 250 A

Notes:

CKT	Circuit Description	Trip	Poles	A		B		C		Poles	Trip	Circuit Description	CKT
1	HWP001; MECH PUMP ROOM C111	40 A	3	4 kVA	4 kVA					3	40 A	HWP002; MECH PUMP ROOM C111	2
3	--	--	--			4 kVA	4 kVA			--	--	--	4
5	--	--	--					4 kVA	4 kVA	--	--	--	6
7	PANEL 036-PPL1A8A VIA 036-LV010	20 A	3	1 kVA	0 kVA					3	70 A	EGRESS LIGHTING PANEL 036-ELPH1D4	8
9	--	--	--			0 kVA	0 kVA			--	--	--	10
11	--	--	--					0 kVA	0 kVA	--	--	--	12
13	Spare	20 A	1	0 kVA	0 kVA					1	20 A	Spare	14
15	Spare	20 A	1			0 kVA	0 kVA			1	20 A	Spare	16
17	Spare	20 A	1					0 kVA	0 kVA	1	20 A	Spare	18
19	Spare	20 A	1	0 kVA	0 kVA					1	20 A	Spare	20
21	Spare	20 A	1			0 kVA	0 kVA			1	20 A	Spare	22
23	Spare	20 A	1					0 kVA	0 kVA	1	20 A	Spare	24
25	Spare	20 A	1	0 kVA	0 kVA					1	20 A	Spare	26
27	Spare	20 A	1			0 kVA	0 kVA			1	20 A	Spare	28
29	Spare	20 A	1					0 kVA	0 kVA	1	20 A	Spare	30
31	Spare	20 A	1	0 kVA	0 kVA					1	20 A	Spare	32
33	Spare	20 A	1			0 kVA	0 kVA			1	20 A	Spare	34
35	Spare	20 A	1					0 kVA	0 kVA	1	20 A	Spare	36
37	Spare	20 A	1	0 kVA	0 kVA					1	20 A	Spare	38
39	Spare	20 A	1			0 kVA	0 kVA			1	20 A	Spare	40
41	Spare	20 A	1					0 kVA	0 kVA	1	20 A	Spare	42
			Total Load:	9 kVA		8 kVA		8 kVA					
			Total Amps:	32 A		29 A		29 A					

Legend:

Load Classification	Connected Load	Demand Factor	Estimated Demand	Panel Totals	
Other	25 kVA	100.00%	25 kVA		
				Total Conn. Load:	25 kVA
				Total Est. Demand:	25 kVA
				Total Conn. Current:	30 A
				Total Est. Demand Current:	30 A

Notes:

Branch Panel: 036-PPL1D4C

Location: ELEC ROOM N147 **Volts:** 120/208 Wye **A.I.C. Rating:** 22,000 AIC
Supply From: 036-PPL1D4B **Phases:** 3 **Mains Type:** MLO
Mounting: Surface **Wires:** 4 **Mains Rating:** 225 A
Enclosure: NEMA 1 **MCB Rating:** N/A

Notes:

CKT	Circuit Description	Trip	Poles	A		B		C		Poles	Trip	Circuit Description	CKT
1	EQUIPTMENT, GRAPHICS; N130C	20 A	1	1 kVA	1 kVA					1	20 A	EQUIPTMENT, GRAPHICS; N130C	2
3	EIQUIPTMENT, GRAPHICS; N130C	20 A	1			1 kVA	1 kVA			1	20 A	EQUIPTMENT, GRAPHICS; N130C	4
5	GENERAL; C108, C100, C109	20 A	1					1 kVA	1 kVA	1	20 A	MAIL ROOM; C109	6
7	GENERAL; C106, C105, C104, C100B, C103	20 A	1	1 kVA	0 kVA					1	20 A	GENERAL, ELEC. ROOM; N147	8
9	GENERAL, MECH PUMP / PUMP ROOM; 1ST.	20 A	1			1 kVA	1 kVA			1	20 A	GENERAL; C107, C108	10
11	GENERAL, CONF. ROOM; N107	20 A	1					0 kVA	1 kVA	1	20 A	GENERAL, CONF. ROOM; N107	12
13	GENERAL, CONF. ROOM; N107	20 A	1	0 kVA	0 kVA					1	20 A	GENERAL, CONF. ROOM; N107	14
15	GENERAL, CONF. ROOM; N107	20 A	1			0 kVA	0 kVA			1	20 A	GENERAL, CONF. ROOM; N107	16
17	PROJECTION SCREEN, CONF. ROOM; N107	20 A	1					1 kVA	1 kVA	1	20 A	PROJECTOR, CONF. ROOM; N107	18
19	GENERAL EXTERIOR	20 A	1	0 kVA	0 kVA					1	20 A	GENERAL EXTERIOR	20
21	GENERAL EXTERIOR	20 A	1			0 kVA	0 kVA			1	20 A	GENERAL EXTERIOR	22
23	DOOR HARDWARE; STAIR 1, N140	20 A	1					0 kVA	1 kVA	1	20 A	036-CRP003, PLUMBING ROOM	24
25	Spare	20 A	1	0 kVA	0 kVA					1	20 A	Spare	26
27	Spare	20 A	1			0 kVA	0 kVA			1	20 A	Spare	28
29	Spare	20 A	1					0 kVA	0 kVA	1	20 A	Spare	30
31	Spare	20 A	1	0 kVA	0 kVA					1	20 A	Spare	32
33	Spare	20 A	1			0 kVA	0 kVA			1	20 A	Spare	34
35	Spare	20 A	1					0 kVA	0 kVA	1	20 A	Spare	36
37	Spare	20 A	1	0 kVA	0 kVA					1	20 A	Spare	38
39	Spare	20 A	1			0 kVA	0 kVA			1	20 A	Spare	40
41	Spare	20 A	1					0 kVA	0 kVA	1	20 A	Spare	42
			Total Load:	4 kVA		5 kVA		6 kVA					
			Total Amps:	35 A		39 A		47 A					

Legend:

Load Classification	Connected Load	Demand Factor	Estimated Demand	Panel Totals	
Other	7 kVA	100.00%	7 kVA		
				Total Conn. Load:	14 kVA
				Total Est. Demand:	14 kVA
				Total Conn. Current:	40 A
				Total Est. Demand Current:	40 A

Notes:

Branch Panel: 036-PPL1A8A

Location: MECH PUMP C110 **Volts:** 120/208 Wye **A.I.C. Rating:** 22,000 AIC
Supply From: 036-LVT010 **Phases:** 3 **Mains Type:** MCB
Mounting: Surface **Wires:** 4 **Mains Rating:** 100 A
Enclosure: NEMA 1 **MCB Rating:** 100 A

Notes:

CKT	Circuit Description	Trip	Poles	A		B		C		Poles	Trip	Circuit Description	CKT
1	EQUIP. CONTROLS; MECH PUMP ROOM C111	20 A	1	1 kVA	1 kVA					1	20 A	EQUIP. CONTROLS; PUMP ROOM, 1ST FLOOR.	2
3	Spare	20 A	1			0 kVA	0 kVA			1	20 A	Spare	4
5	Spare	20 A	1					0 kVA	0 kVA	1	20 A	Spare	6
7	Spare	20 A	1	0 kVA	0 kVA					1	20 A	Spare	8
9	Spare	20 A	1			0 kVA	0 kVA			1	20 A	Spare	10
11	Spare	20 A	1					0 kVA	0 kVA	1	20 A	Spare	12
13	Spare	20 A	1	0 kVA	0 kVA					1	20 A	Spare	14
15	Spare	20 A	1			0 kVA	0 kVA			1	20 A	Spare	16
17	Spare	20 A	1					0 kVA	0 kVA	1	20 A	Spare	18
19	Spare	20 A	1	0 kVA	0 kVA					1	20 A	Spare	20
21	Spare	20 A	1			0 kVA	0 kVA			1	20 A	Spare	22
23	Spare	20 A	1					0 kVA	0 kVA	1	20 A	Spare	24
25	Spare	20 A	1	0 kVA	0 kVA					1	20 A	Spare	26
27	Spare	20 A	1			0 kVA	0 kVA			1	20 A	Spare	28
29	Spare	20 A	1					0 kVA	0 kVA	1	20 A	Spare	30
31	Spare	20 A	1	0 kVA	0 kVA					1	20 A	Spare	32
33	Spare	20 A	1			0 kVA	0 kVA			1	20 A	Spare	34
35	Spare	20 A	1					0 kVA	0 kVA	1	20 A	Spare	36
37	Spare	20 A	1	0 kVA	0 kVA					1	20 A	Spare	38
39	Spare	20 A	1			0 kVA	0 kVA			1	20 A	Spare	40
41	Spare	20 A	1					0 kVA	0 kVA	1	20 A	Spare	42
			Total Load:	1 kVA		0 kVA		0 kVA					
			Total Amps:	8 A		0 A		0 A					

Legend:

Load Classification	Connected Load	Demand Factor	Estimated Demand	Panel Totals	
Other	1 kVA	100.00%	1 kVA		
				Total Conn. Load:	1 kVA
				Total Est. Demand:	1 kVA
				Total Conn. Current:	3 A
				Total Est. Demand Current:	3 A

Notes:

100% SUBMITTAL

NORTH

AECOM
AECOM TECHNICAL SERVICES, INC.
3101 WILSON BOULEVARD
SUITE 900
ARLINGTON, VA 22201
T: 703-682-4900 F: 703.682.4901
www.aecom.com

SEAL AREA

STATE OF MARYLAND · JIEER REN · No. 40964 · PROFESSIONAL ENGINEER

KEY PLAN

REV	DATE	DESCRIPTION	S&R BR.	CUSTOMER	PM	SECT. HEAD

	INITIALS	DATE
DRAWN BY	LB/BF	
CHECKED BY	JR/MM	
A-E MANAGER	EW	
ENVIRONMENTAL BRANCH	JH	
SAFETY BRANCH	CS	
CM	MMD	
PM	RWP	
CUSTOMER	JWB	
ENG. BRANCH	DGL	

ELECTRICAL PANEL SCHEDULES

E-907

FLIGHT PROJECTS BUILDING

NATIONAL AERONAUTICS AND SPACE ADMINISTRATION
GODDARD SPACE FLIGHT CENTER GREENBELT, MARYLAND
FACILITIES MANAGEMENT DIVISION

DATE ISSUED	CoF CODE OR WR#	AECOM PROJECT NO.	SCALE
10/12/2012	12GXAZ	60187636	

FILE DATE: 10/11/2012 2:15:29 PM

PIPING AND SYMBOL LEGEND

Symbol	Description	Symbol	Description
(E)	EXISTING PIPING TO REMAIN		PRESSURE REDUCING VALVE
	EXISTING PIPING TO BE REMOVED		TEMPERATURE AND PRESSURE RELIEF VALVE
	SANITARY DRAIN		BACKFLOW PREVENTER
	SANITARY VENT	HB	HOSE BIBB
SD	STORM DRAIN	WH	WALL HYDRANT
SSD	SUBSOIL DRAIN, FOOTING DRAIN		UNION
OFD	OVERFLOW DRAIN		STRAINER
D	INDIRECT DRAIN		PIPE ANCHOR
PD	PUMP DISCHARGE PIPING		PIPE GUIDE
	DOMESTIC COLD WATER		EXPANSION JOINT
	DOMESTIC HOT WATER SUPPLY		FLEXIBLE PIPE CONNECTION
	DOMESTIC HOT WATER CIRCULATING		INCREASER OR REDUCER
TW	TEMPERED WATER		THERMOSTATIC MIXING VALVE
TP	TRAP PRIMER		CAP
G	NATURAL GAS, LOW PRESSURE		PRESSURE GAGE
HG	NATURAL GAS, HIGH PRESSURE	V	VACUUM GAGE
GV	NATURAL GAS VENT		THERMOMETER
NP	NON-POTABLE WATER		OS&Y VALVE
DI	DISTILLED WATER		FLUID FLOW DIRECTION
DE	DEIONIZED WATER		PIPE UP (ELBOW)
RO	REVERSE OSMOSIS WATER		PIPE DOWN (ELBOW)
A	COMPRESSED AIR		BRANCH BOTTOM CONNECTION
MA	MEDICAL COMPRESSED AIR	SA-'A'	SHOCK ARRESTOR, SIZE INDICATED
LA	LABORATORY COMPRESSED AIR	AV	AUTOMATIC AIR VENT
VAC	VACUUM	WCO	WALL CLEANOUT
MV	MEDICAL VACUUM	CO	CLEANOUT PLUG
LV	LABORATORY VACUUM	FCO	FLOOR CLEANOUT
O2	OXYGEN	GCO	GRADE CLEANOUT
N2	NITROGEN		VENT THROUGH ROOF, RISER DIAGRAMS
N2O	NITROUS OXIDE		FLOOR DRAIN, AREA DRAIN, GARAGE DRAIN
AW	ACID WASTE DRAIN		ROOF DRAIN
AV	ACID VENT		TRAP, PLAN
	GATE VALVE		TRAP, RISER DIAGRAMS
	GLOBE VALVE		OPEN SIGHT DRAIN
	DRAIN VALVE WITH CAP		COMBINATION EMERGENCY SHOWER AND EYE/FACE WASH
	BALL VALVE		PIPE CONTINUATION
	BUTTERFLY VALVE		POINT OF CONNECTION BETWEEN NEW AND EXISTING WORK
	GAS COCK		POINT BETWEEN EXISTING WORK TO REMAIN AND EXISTING WORK TO BE REMOVED
	BALANCING VALVE		
	CHECK VALVE		ACCESS PANEL (CEILING)
	AUTOMATIC CONTROL VALVE, 2 WAY	AP	ACCESS PANEL (WALL)
	AUTOMATIC CONTROL VALVE, 3 WAY		FLOOR SINK

Symbol	Description	Symbol	Description
W / -	DOMESTIC WATER RISER DESIGNATION	G / -	NATURAL GAS RISER DESIGNATION
S / -	SANITARY RISER DESIGNATION	OFD / -	OVERFLOW DRAIN RISER DESIGNATION
SD / -	STORM DRAIN RISER DESIGNATION		

ABBREVIATIONS

ABV	ABOVE
ACS	ACCESS
ACFM	ABSOLUTE CUBIC FEET PER MINUTE
AD	AREA DRAIN
ADA	AMERICANS WITH DISABILITIES ACT
AFF	ABOVE FINISHED FLOOR
AHJ	AUTHORITY HAVING JURISDICTION
AP	ACCESS PANEL
APPR	APPROVED
APPROX	APPROXIMATE
ARCH.	ARCHITECTURAL
ASSE	AMERICAN SOCIETY OF SANITARY ENGINEERING
ASTM	AMERICAN SOCIETY FOR TESTING AND MATERIALS
AV	AIR VENT
AUX	AUXILIARY
BAS	BUILDING AUTOMATION SYSTEM
BET.	BETWEEN
BFP	BACKFLOW PREVENTER
BLDG	BUILDING
BLW	BELOW
BLW FL	BELOW FLOOR
BOT	BOTTOM
BSMT	BASEMENT
BTU	BRITISH THERMAL UNIT
BU	BUILT-UP
BWV	BACKWATER VALVE
°C	DEGREES CELSIUS
CA	COMPRESSED AIR
CAP	CAPACITY
CFH	CUBIC FEET PER HOUR
CFM	CUBIC FEET PER MINUTE
CENT.	CENTRIFUGAL
CI	CAST IRON
CLG	CEILING
CO	CLEANOUT
COL	COLUMN
COMB.	COMBINATION
COMP	COMPRESSED, COMPRESSOR
CONC	CONCRETE
CONN	CONNECT, CONNECTION
CONST	CONSTRUCTION
CONT	CONTINUOUS, CONTINUATION
CONTR	CONTRACT, CONTRACTOR
COORD	COORDINATE
COP	COPPER
CP	CIRCULATING PUMP
CSEFW	COMBINATION EMERGENCY SHOWER AND EYE/FACE WASH
CTD	COOLING TOWER DRAIN
CW	COLD WATER
CWFU	COLD WATER FIXTURE UNIT
D	DRAIN LINE
DBP	DOMESTIC BOOSTER PUMP
DEG	DEGREES
DEMO	DEMOLITION, DEMOLISH
DFU	DRAINAGE FIXTURE UNIT
DIA	DIAMETER
DIAG	DIAGRAM
DIM.	DIMENSION
DISC.	DISCONNECT
DISCH	DISCHARGE
DISP	DISPOSER
DN	DOWN
DS	DOWNSPOUT
DWG	DRAWING
E	EAST
EA	EACH
EFF	EFFICIENCY
EJ	EXPANSION JOINT
ELEC	ELECTRICAL
ELEV	ELEVATION
EMER	EMERGENCY
ENGR	ENGINEER
EP	EJECTOR PUMP
EQPT	EQUIPMENT
EST	ESTIMATED
ET	EXPANSION TANK
ETP	ELECTRONIC TRAP PRIMER
ETWH	ELECTRIC TANKLESS WATER HEATER
EWC	ELECTRIC WATER COOLER
EWH	ELECTRIC WATER HEATER
EXH	EXHAUST
EXP	EXPOSED
EXPN	EXPANSION
EXST	EXISTING
EXT	EXTERIOR
EXTN	EXTENSION
°F	DEGREES FAHRENHEIT
FCO	FLOOR CLEANOUT
FD	FLOOR DRAIN
FL	FLOOR
FLA	FULL LOAD AMPS
FLEX	FLEXIBLE
FLG	FLANGE
FPM	FEET PER MINUTE
FPS	FEET PER SECOND
FS	FLOOR SINK
FT	FEET
FT WG	FEET OF WATER GAUGE
G	GAS
GA	GAUGE
GAL	GALLONS
GALV	GALVANIZE, GALVANIZED
GCO	GRADE CLEANOUT
GD	GARAGE DRAIN
GND	GROUND
GOVT	GOVERNMENT
GPF	GALLONS PER FLUSH
GPH	GALLONS PER HOUR
GPM	GALLONS PER MINUTE
GR	GRADE
GTV	GATE VALVE
GWH	GAS FIRED WATER HEATER
HB	HOSE BIBB
HG	MERCURY
HGT	HEIGHT
HORIZ	HORIZONTAL
HP	HORSE POWER
HR	HOUR
HTR	HEATER
HW	HOT WATER
HWC	HOT WATER CIRCULATING LINE
HWFU	HOT WATER FIXTURE UNIT
HWL	HIGH-WATER LINE
HX	HEAT EXCHANGER
HYD	HYDRANT
HZ	HERTZ
IE	INVERT ELEVATION
IN	INCH
IN HG	INCHES OF MERCURY
INV	INVERT
IN WG	INCHES OF WATER GAUGE
INSTL	INSTALL
INSUL	INSULATION, INSULATED, INSULATOR, INSULATING
INTMD	INTERMEDIATE
IP	IRON PIPE
JC	JANITOR CLOSET
KG	KILOGRAM
KW	KILOWATT
KWH	KILOWATT HOUR
L	LITER
LAB	LABORATORY
LAV	LAVATORY
LBS	POUNDS
LBS/HR	POUNDS PER HOUR
LG	LENGTH, LONG
LIQ	LIQUID
LWL	LOW-WATER LINE
M	METER
MATL	MATERIAL
MAX	MAXIMUM
MB	MOP BASIN
MBH	1000 BTU PER HOUR
MCA	MINIMUM CIRCUIT AMPACITY
MECH	MECHANICAL
MER	MECHANICAL EQUIPMENT ROOM
MET.	METAL
MFR	MANUFACTURER
MH	MANHOLE, MOUNTING HEIGHT
MIN	MINIMUM, MINUTE
MISC	MISCELLANEOUS
MM	MILLIMETER
MP	MEDIUM PRESSURE
MPH	MILES PER HOUR
MT	MOUNT
MTD	MOUNTED
MTG	MOUNTING
MTR	MOTOR
MTZ	MOTORIZED
N	NORTH
N/A	NOT APPLICABLE
NC	NORMALLY CLOSED, NOISE CRITERIA
N.I.C.	NOT IN CONTRACT
NO	NORMALLY OPEN, NUMBER
NOM	NOMINAL
NTS	NOT TO SCALE
OFD	OVERFLOW DRAIN
OL	OVERLOAD
OPNG	OPENING
OSD	OPEN SIGHT DRAIN
OS&Y	OUTSIDE SCREW AND YOKE
OVHD	OVERHEAD
P	PUMP
PA	PIPE ANCHOR
PART.	PARTIAL
PD	PUMP DISCHARGE, PLANTER DRAIN, PRESSURE DROP
PDCV	PRESSURE DIFFERENTIAL CONTROL VALVE
PG	PIPE GUIDE
PH	PHASE, PENTHOUSE
PNL	PANEL
PPH	POUNDS PER HOUR
PRESS.	PRESSURE
PRI	PRIMARY
PROP	PROPELLER
P.R.S.	PRESSURE REDUCING STATION
PRI	PRIMARY
PRV	PRESSURE REDUCING VALVE, PRESSURE RELIEF VALVE
PSI	POUNDS PER SQUARE INCH
PSIG	POUNDS PER SQUARE INCH GAUGE
PT	POINT
PVC	POLYVINYL CHLORIDE
PWR	POWER
R	RISER, RIGHT
RAD	RADIUS
REC	RECOVERY
RD	ROOF DRAIN
RECIR	RECIRCULATING
RECT	RECTANGULAR
RED	REDUCER, REDUCING
REIN	REINFORCE, REINFORCEMENT, REINFORCED
REQD	REQUIRED
REV	REVISION
RF	ROOF
RFH	ROOF HATCH
RL	RAIN LEADER
RLA	RUNNING LOAD AMPS
RM	ROOM
RPM	REVOLUTIONS PER MINUTE
RTE	ROUTE
RV	RELIEF VALVE, RELIEF VENT
S	SOUTH
SA	SHOCK ARRESTOR
SAN	SANITARY
SCFM	STANDARD CUBIC FEET PER MINUTE
SCHED	SCHEDULE
SD	STORM DRAIN
SEC	SECONDARY
SH	SHOWER
SK	SINK, SKETCH
SLP	SLOPE
SP	SUMP PUMP
SPEC	SPECIFICATION(S)
SPRT	SUPPORT
SQ.FT	SQUARE FEET
SS	STAINLESS STEEL, SANITARY SEWER
ST	STEAM
STD	STANDARD
SYS	SYSTEM
T	TOP
T&P	TEMPERATURE AND PRESSURE
TDH	TOTAL DYNAMIC HEAD
TEMP	TEMPERATURE
THERM.	THERMOMETER
TOT	TOTAL
TMV	THERMOSTATIC MIXING VALVE
TPV	TEMPERATURE AND PRESSURE RELIEF VALVE
TYP	TYPICAL
UR	URINAL
V	VOLT, VENT, VALVE
VAC	VACUUM
VB	VAPOR BARRIER
VEL	VELOCITY
VERT	VERTICAL
VEST.	VESTIBULE
VFC	VARIABLE FREQUENCY CONTROLLER
VFD	VARIABLE FREQUENCY DRIVE
VIB	VIBRATION
VOL	VOLUME
VP	VENT PIPE
VS	VENT STACK
VTR	VENT THRU ROOF
W	WATT, WEST
W/	WITH
W/O	WITHOUT
WC	WATER CLOSET
WCO	WALL CLEANOUT
WG	WATER GAUGE
WH	WALL HYDRANT
WP	WASTE PIPE
WPD	WATER PRESSURE DROP
WSFU	WATER SUPPLY FIXTURE UNIT
WST	WASTE
WTR	WATER

GENERAL NOTES

1. CHARACTER IDENTIFIERS IN LINES ON PIPING LEGEND ARE ALSO USED FOR ABBREVIATIONS.
2. CONTRACTOR SHALL COORDINATE THIS WORK WITH THAT OF OTHER TRADES, INCLUDING BUT NOT LIMITED TO, ELECTRICAL, HVAC, PROCESS PIPING, SPRINKLER, STRUCTURAL AND GENERAL ARCHITECTURE.
3. ANY INTERFERENCE SHALL BE BROUGHT TO THE ATTENTION OF THE OWNER'S REPRESENTATIVE AND SHALL BE RESOLVED PRIOR TO THE INSTALLATION OF THE WORK.
4. NO WORK SHALL BE INSTALLED IN VIOLATION OF ANY GOVERNING CODES. ANY WORK SHOWN ON THE DRAWINGS WHICH IS IN VIOLATION OF SUCH CODES SHALL BE BROUGHT TO THE ATTENTION OF THE OWNER'S REPRESENTATIVE AND SHALL BE RESOLVED PRIOR TO THE INSTALLATION OF THE WORK.
5. ALL PIPING PENETRATING CEILINGS AND WALLS SHALL BE INSTALLED WITH ESCUTCHEONS AT THE PENETRATION. ALL PIPING PENETRATING EXTERIOR WALLS AND ROOFS SHALL BE FLASHED IN APPROVED MANNER AND SHALL BE SEALED WEATHERTIGHT. PIPING PENETRATING FIRE RATED PARTITIONS SHALL BE PROVIDED WITH FIRE RATED SEAL AS REQUIRED BY LOCAL CODE AUTHORITY.
6. PROVIDE ACCESS PANELS FOR SYSTEM COMPONENTS THAT ARE CONCEALED AND REQUIRE PERIODIC SERVICE. ACCESS PANELS SHALL BE A MINIMUM OF 12" X 12".
7. PROVIDE SHUT-OFF VALVES ON BRANCH PIPING AND ON ALL SUPPLIES TO INDIVIDUAL FIXTURES AND EQUIPMENT. PROVIDE VALVES ON ALL WATER MAIN BRANCHES IN CORRIDORS AND WHERE INDICATED ON DRAWINGS.
8. PRIOR TO THE INSTALLATION OR FABRICATION OF ANY WORK, THE CONTRACTORS SHALL FAMILIARIZE THEMSELVES WITH THE ACTUAL CONDITIONS UNDER WHICH THE WORK IS TO BE PERFORMED AND SHALL FULLY COORDINATE ALL WORK WITH THE ARCHITECTURAL PLANS, BUILDING STRUCTURE, AND WORK OF OTHER TRADES. CONTRACTOR SHALL VERIFY EXISTING INVERTS PRIOR TO CONSTRUCTION.
9. CONTRACTOR SHALL BE RESPONSIBLE FOR SECURING ALL PERMITS AND PAYING ALL FEES REQUIRED FOR WORK SHOWN ON DRAWINGS AND IN SPECIFICATIONS.
10. CONSULT ARCHITECTURAL DRAWINGS FOR BUILDING DIMENSION, LOCATION, AND ELEVATION OF FIXTURES.
11. ALL SANITARY AND STORM DRAIN PIPING SMALLER THAN 3" SHALL BE INSTALLED AT 1/4" PER FOOT FALL. 3" AND LARGER PIPING SHALL BE INSTALLED AT 1/8" PER FOOT FALL UNLESS NOTED OTHERWISE.
12. PLUMBING LAYOUTS ARE SCHEMATIC. IT IS NOT POSSIBLE TO INDICATED EVERY OFFSET, ELBOW, UNION, VALVE, TRAP, ACCESS PANEL, ETC. THAT IS REQUIRED FOR A PROPER WORKING SYSTEM. NO ADDITIONAL COST WILL BE ALLOWED FOR THESE ADDITIONAL FITTINGS THAT ARE REQUIRED TO INSTALL THE PIPING SYSTEM WITHIN THE SPACE PROVIDED AND THAT ARE REQUIRED FOR A COMPLETE WORKING SYSTEM.
13. UNLESS OTHERWISE INDICATED, ROUTE ALL PIPING ABOVE CEILINGS. ROUTE ALL PIPING AS HIGH AS POSSIBLE IN AREAS WITHOUT CEILINGS.
14. ALL EXPOSED PIPING AND FITTINGS SHALL BE CHROME PLATED.
15. ALL CUTTING, DRILLING, AND PATCHING OF WALLS, FLOORS, AND/OR STRUCTURAL MEMBERS FOR THE INSTALLATION OF THE PLUMBING SYSTEMS SHALL BE PROVIDED. STRUCTURAL COMPONENTS SHALL NOT BE CUT, DRILLED, OR MODIFIED IN ANY WAY WITHOUT THE STRUCTURAL ENGINEER'S REVIEW AND PRIOR APPROVAL.

WATER SUPPLY AVAILABILITY

DATE OF FLOW TEST: 09-15-2011

FLOW HYDRANT LOCATION: #126

TEST HYDRANT, STATIC PRESSURE: 70 PSIG
TEST HYDRANT, RESIDUAL PRESSURE: 68 PSIG

FLOW HYDRANT #1 LOCATION: #122
FLOW HYDRANT #1 FLOW: 1,167 GPM

FLOW HYDRANT #2 LOCATION: #121
FLOW HYDRANT #2 FLOW: 1,167 GPM

10/12/2012 100% SUBMITTAL

AECOM

AECOM TECHNICAL SERVICES, INC.
3101 WILSON BOULEVARD
SUITE 900
ARLINGTON, VA 22201

T: 703-682-4900 F: 703.682.4901
www.aecom.com

SEAL AREA

STATE OF MARYLAND · DAVOOD TASHAKKORI · 18112 · PROFESSIONAL ENGINEER

KEY PLAN

REV	DATE	DESCRIPTION	S&R BR.	CUSTOMER	PM	SECT. HEAD

	INITIALS	DATE
DRAWN BY	MM	
CHECKED BY	DTM	
A-E MANAGER	EW	
ENVIRONMENTAL BRANCH	JH	
SAFETY BRANCH	CS	
CM	MMD	
PM	RWP	
CUSTOMER	JWB	
ENG. BRANCH	DGL	

PLUMBING
ABBREVIATIONS, NOTES & SYMBOLS

P-001

FLIGHT PROJECTS BUILDING

NATIONAL AERONAUTICS AND SPACE ADMINISTRATION
GODDARD SPACE FLIGHT CENTER GREENBELT, MARYLAND
FACILITIES MANAGEMENT DIVISION

DATE ISSUED	CoF CODE OR WR#	AECOM PROJECT NO.	SCALE
07/12/2012	12GXAZ	60187636	NOT AT SCALE

FILE DATE: 10/10/2012 4:09:59 PM

SPECIFIC NOTES

1. BELOW FLOOR.
2. 1" CW & HW UP, 3/4" CW & HW DN.
3. 3" OSD ABOVE CEILING.
4. 3" SAN UP & DN. PROVIDE WCO AT BASE OF STACK.
5. BACKWATER VALVE.
6. 8" SD UP.
7. 8" OFD UP.
8. 3" SAN UP.
9. 3" SAN DN.
10. REDUCE PRESSURE ZONE BACFLOW PREVENTER GOMARS #BFP003 SPILL RELIEF PIPE ON FFD.

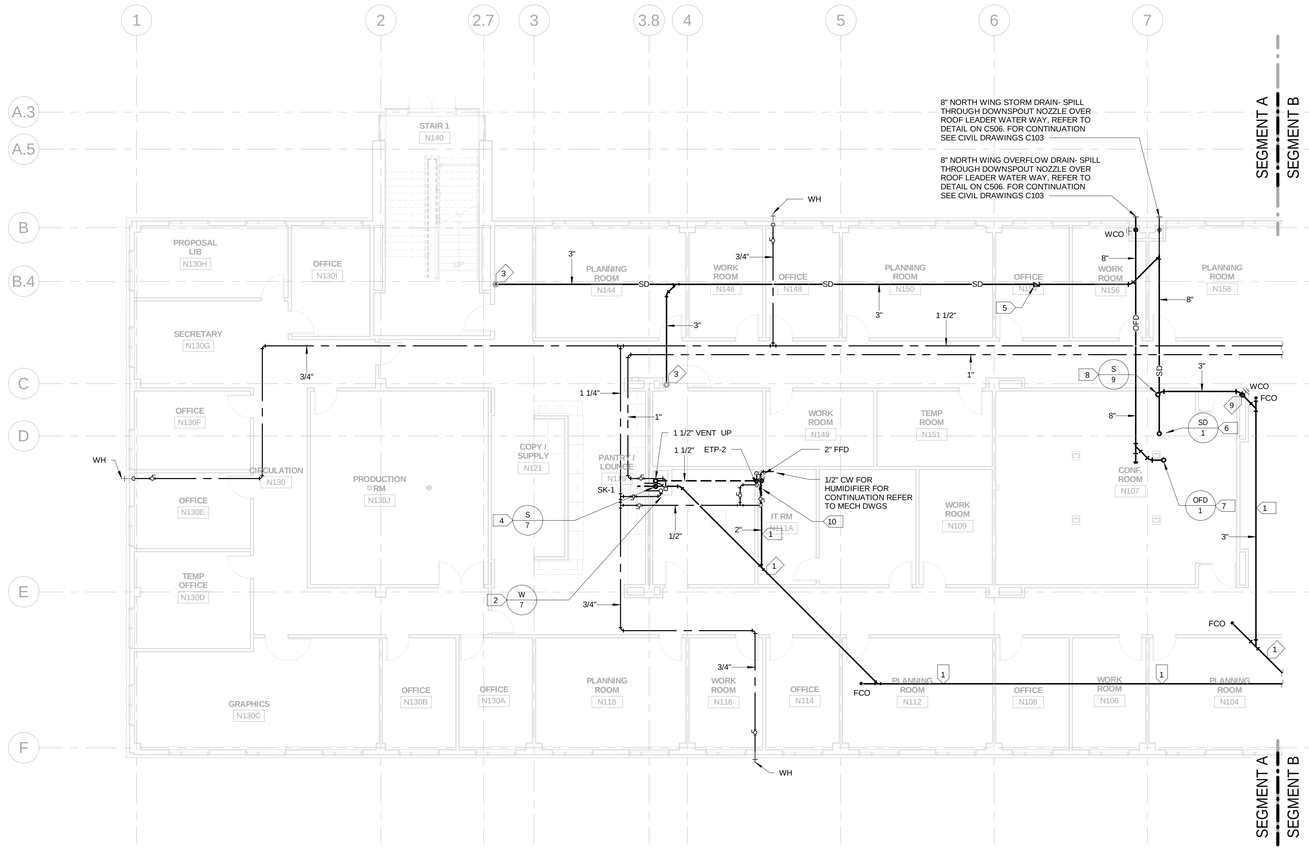

1 LEVEL 1 PLUMBING PLAN - SEGMENT A

P-101A REF. SCALE: 1/8" = 1'-0"

10/12/2012 100% SUBMITTAL

NORTH

1/8"=1'-0" 8' 4' 0 8' 16'

AECOM

AECOM TECHNICAL SERVICES, INC.
3101 WILSON BOULEVARD
SUITE 900
ARLINGTON, VA 22201

T: 703-682-4900 F: 703.682.4901
www.aecom.com

SEAL AREA

STATE OF MARYLAND
DONALD TASHIMA
18112
PROFESSIONAL ENGINEER

KEY PLAN

SEGMENT - A

REV	DATE	DESCRIPTION	S&R BR.	CUSTOMER	PM	SECT. HEAD

	INITIALS	DATE
DRAWN BY	MM	
CHECKED BY	DTM	
A-E MANAGER	EW	
ENVIRONMENTAL BRANCH	JH	
SAFETY BRANCH	CS	
CM	MMD	
PM	RWP	
CUSTOMER	JWB	
ENG. BRANCH	DGL	

LEVEL 1 PLUMBING PLAN - SEGMENT A

P-101A

FLIGHT PROJECTS BUILDING

NATIONAL AERONAUTICS AND SPACE ADMINISTRATION

GODDARD SPACE FLIGHT CENTER GREENBELT, MARYLAND
FACILITIES MANAGEMENT DIVISION

DATE ISSUED	CoF CODE OR WR#	AECOM PROJECT NO.	SCALE
07/12/2012	12GXAZ	60187636	1/8" = 1'-0"

FILE DATE: 10/10/2012 4:10:02 PM

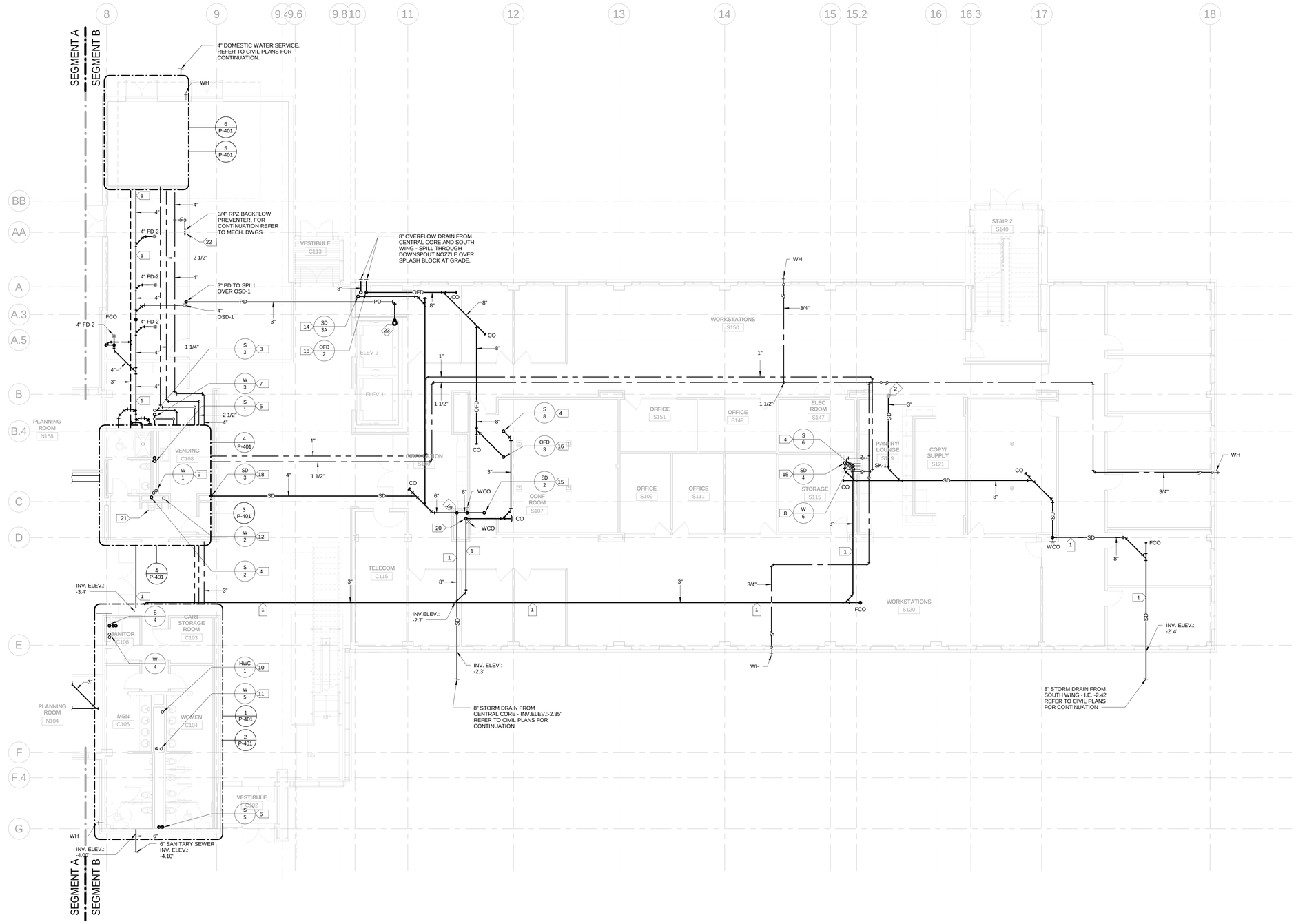

SPECIFIC NOTES

1. BELOW FLOOR.
2. 3" OSD ABOVE CEILING.
3. 3" SAN UP.
4. 3" SAN UP & DN.
5. 4" SAN UP & DN., 3" V UP.
6. 4" SAN UP & DN, 3" V UP.
7. 1" CW & 1" HW UP.
8. 1" CW & 1" HW UP, 3/4" CW & 3/4" HW DN.
9. 1 1/4" CW UP &DN, 1 1/4" HW DN, 3/4" HW UP.
10. 1 1/4" HWC UP.
11. 2 1/2" CW & 2" HW UP.
12. 3/4" CW UP.
13. 1" CW & 1" HW UP, 3/4" CW & 3/4" HW DN
14. 6" SD UP.
15. 8" SD UP.
16. 8" OFD UP.
17. BACKWATER VALVE.
18. 4" SD UP.
19. 8" SD DN.
20. 3" SAN DN.
21. ELECTRIC WATER COOLER, GOMARS #WAC001
22. REDUCED PRESSURE ZONE BACKFLOW PREVENTER, GOMARS #BFP002
23. ELEVATOR SUMP PUMP, GOMARS #SUP001

1 LEVEL 1 PLUMBING PLAN - SEGMENT B

P-101B REF. SCALE: 1/8" = 1'-0"

10/12/2012 100% SUBMITTAL

NORTH

1/8"=1'-0" 8' 4' 0 8' 16'

AECOM

AECOM TECHNICAL SERVICES, INC.
3101 WILSON BOULEVARD
SUITE 900
ARLINGTON, VA 22201

T: 703-682-4900 F: 703.682.4901
www.aecom.com

SEAL AREA

STATE OF MARYLAND
MOOD TASHAMPOM
18112
PROFESSIONAL ENGINEER

KEY PLAN

SEGMENT - B

REV	DATE	DESCRIPTION	S&R BR.	CUSTOMER	PM	SECT. HEAD

	INITIALS	DATE
DRAWN BY	MM	
CHECKED BY	DTM	
A-E MANAGER	EW	
ENVIRONMENTAL BRANCH	JH	
SAFETY BRANCH	CS	
CM	MMD	
PM	RWP	
CUSTOMER	JWB	
ENG. BRANCH	DGL	

LEVEL 1 PLUMBING PLAN - SEGMENT B

P-101B

FLIGHT PROJECTS BUILDING

NATIONAL AERONAUTICS AND SPACE ADMINISTRATION

GODDARD SPACE FLIGHT CENTER GREENBELT, MARYLAND
FACILITIES MANAGEMENT DIVISION

DATE ISSUED	CoF CODE OR WR#	AECOM PROJECT NO.	SCALE
07/12/2012	12GXAZ	60187636	1/8" = 1'-0"

FILE DATE: 10/10/2012 4:10:08 PM

SPECIFIC NOTES

1. 3/4" CW & HW UP & DN.
2. 3" SAN UP & DN.
3. 8" SD UP & DN.
4. 8" OFD UP & DN.
5. 3" SAN UP & DN.

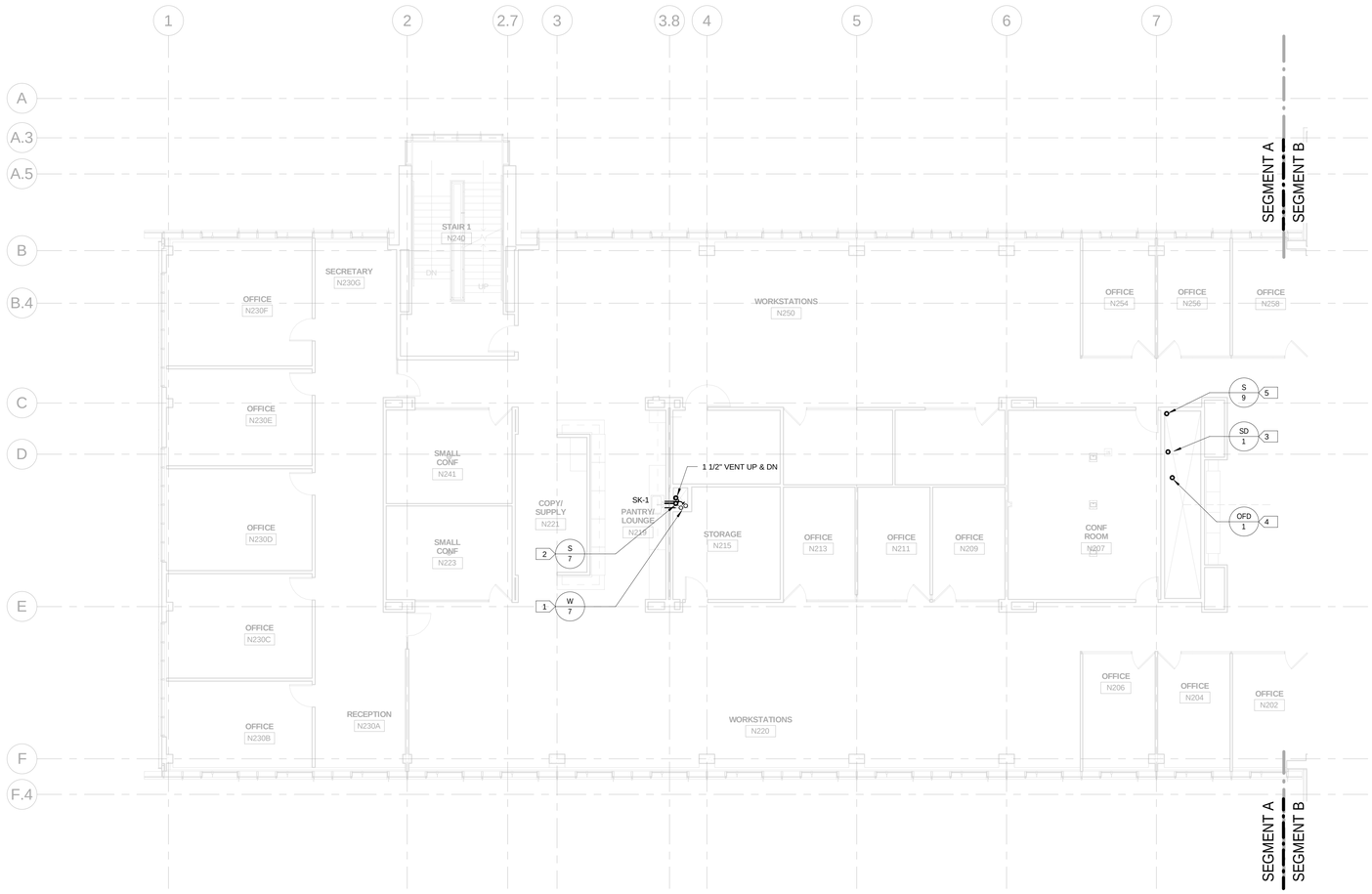

1 LEVEL 2 PLUMBING PLAN - SEGMENT A

P-102A REF. SCALE: 1/8" = 1'-0"

10/12/2012 100% SUBMITTAL

NORTH

1/8"=1'-0" 8' 4' 0 8' 16'

AECOM

AECOM TECHNICAL SERVICES, INC.
3101 WILSON BOULEVARD
SUITE 900
ARLINGTON, VA 22201

T: 703-682-4900 F: 703.682.4901
www.aecom.com

SEAL AREA

STATE OF MARYLAND
GODDARD TASK ENGINEER
18113
PROFESSIONAL ENGINEER

KEY PLAN

SEGMENT - A

REV	DATE	DESCRIPTION	S&R BR.	CUSTOMER	PM	SECT. HEAD

	INITIALS	DATE
DRAWN BY	MM	
CHECKED BY	DTM	
A-E MANAGER	EW	
ENVIRONMENTAL BRANCH	JH	
SAFETY BRANCH	CS	
CM	MMD	
PM	RWP	
CUSTOMER	JWB	
ENG. BRANCH	DGL	

LEVEL 2 PLUMBING PLAN - SEGMENT A

P-102A

FLIGHT PROJECTS BUILDING

NATIONAL AERONAUTICS AND SPACE ADMINISTRATION

GODDARD SPACE FLIGHT CENTER GREENBELT, MARYLAND
FACILITIES MANAGEMENT DIVISION

DATE ISSUED	CoF CODE OR WR#	AECOM PROJECT NO.	SCALE
07/12/2012	12GXAZ	60187636	1/8" = 1'-0"

FILE DATE: 10/10/2012 4:10:12 PM

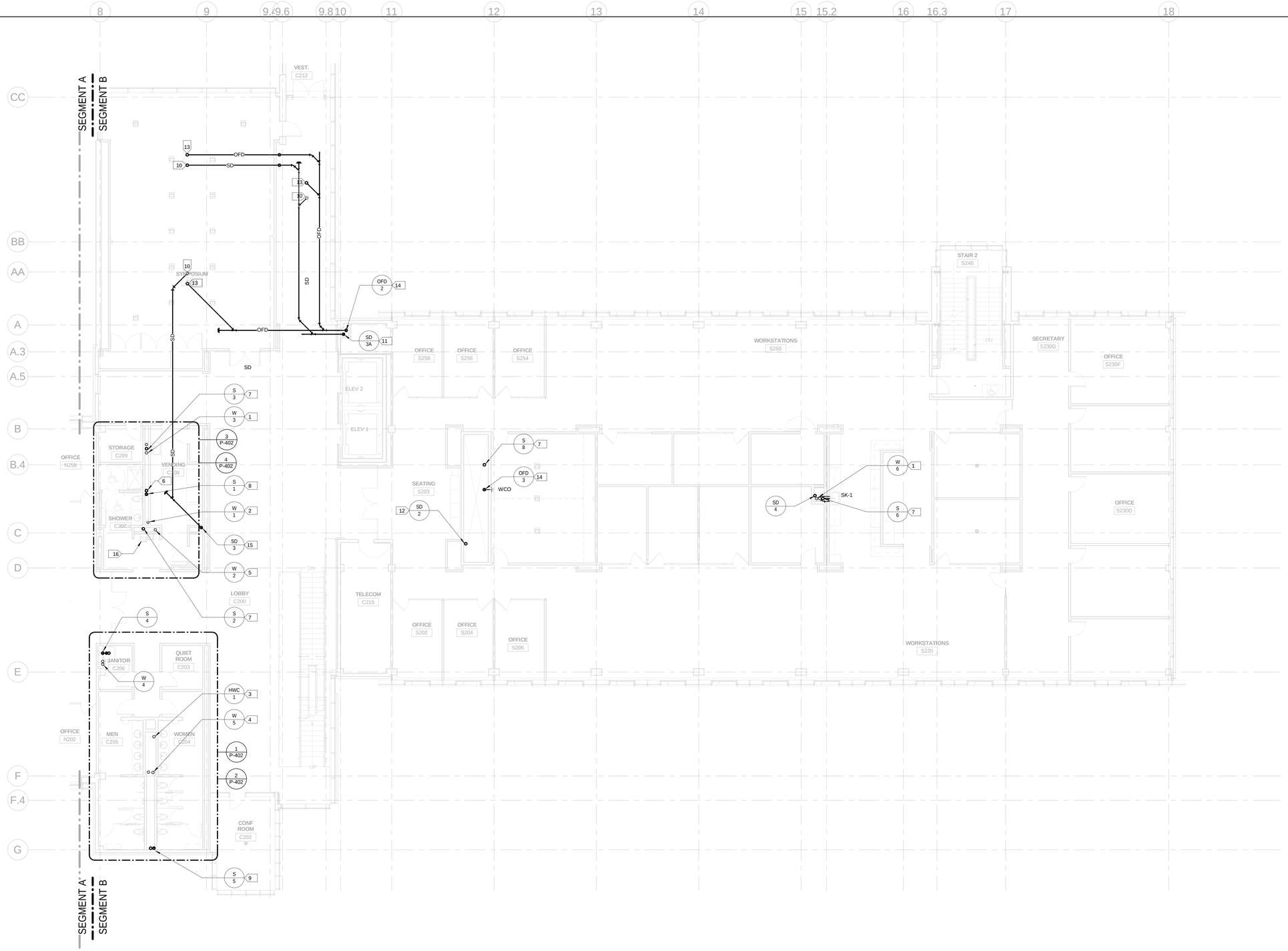

SPECIFIC NOTES

1. 3/4" CW & HW UP & DN.
2. 1 1/4" CW DN., 3/4" HW DN., 3/4" HWC UP.
3. 1 1/4" HWC UP & DN.
4. 2 1/2" CW & 1 1/2" HW UP, 2 1/2" CW & 2" HW DN.
5. 3/4" CW UP & DN.
6. 3" SAN UP.
7. 3" SAN UP & DN.
8. 3" SAN UP & 4" SAN DN., 3" V UP & DN.
9. 4" SAN UP & DN, 3" V UP & DN.
10. 4" SD UP TO RD-2.
11. 6" SD DN.
12. 8" SD UP & DN.
13. 4" OFD UP TO OFD-3.
14. 8" OFD UP & DN.
15. 4" SD DN.
16. ELECTRIC WATER COOLER, GOMARS #WAC002

1 LEVEL 2 PLUMBING PLAN - SEGMENT B

P-102B REF. SCALE: 1/8" = 1'-0"

10/12/2012 100% SUBMITTAL

NORTH

1/8"=1'-0" 8' 4' 0 8' 16'

AECOM
AECOM TECHNICAL SERVICES, INC.
3101 WILSON BOULEVARD
SUITE 900
ARLINGTON, VA 22201
T: 703-682-4900 F: 703.682.4901
www.aecom.com

SEAL AREA

STATE OF MARYLAND
GEORGE WASHINGTON
18113
PROFESSIONAL ENGINEER

KEY PLAN

SEGMENT - B

REV	DATE	DESCRIPTION	S&R BR.	CUSTOMER	PM	SECT. HEAD

	INITIALS	DATE
DRAWN BY	MM	
CHECKED BY	DTM	
A-E MANAGER	EW	
ENVIRONMENTAL BRANCH	JH	
SAFETY BRANCH	CS	
CM	MMD	
PM	RWP	
CUSTOMER	JWB	
ENG. BRANCH	DGL	

LEVEL 2 PLUMBING PLAN - SEGMENT B

P-102B

FLIGHT PROJECTS BUILDING

NATIONAL AERONAUTICS AND SPACE ADMINISTRATION

GODDARD SPACE FLIGHT CENTER GREENBELT, MARYLAND
FACILITIES MANAGEMENT DIVISION

DATE ISSUED	CoF CODE OR WR#	AECOM PROJECT NO.	SCALE
07/12/2012	12GXAZ	60187636	1/8" = 1'-0"

FILE DATE: 10/10/2012 4:10:21 PM

SPECIFIC NOTES

1. 3/4" CW & HW UP & DN.
2. 3" SAN UP & DN.
3. 8" SD UP & DN.
4. 8" OFD UP & DN.
5. 3" SAN UP & DN.

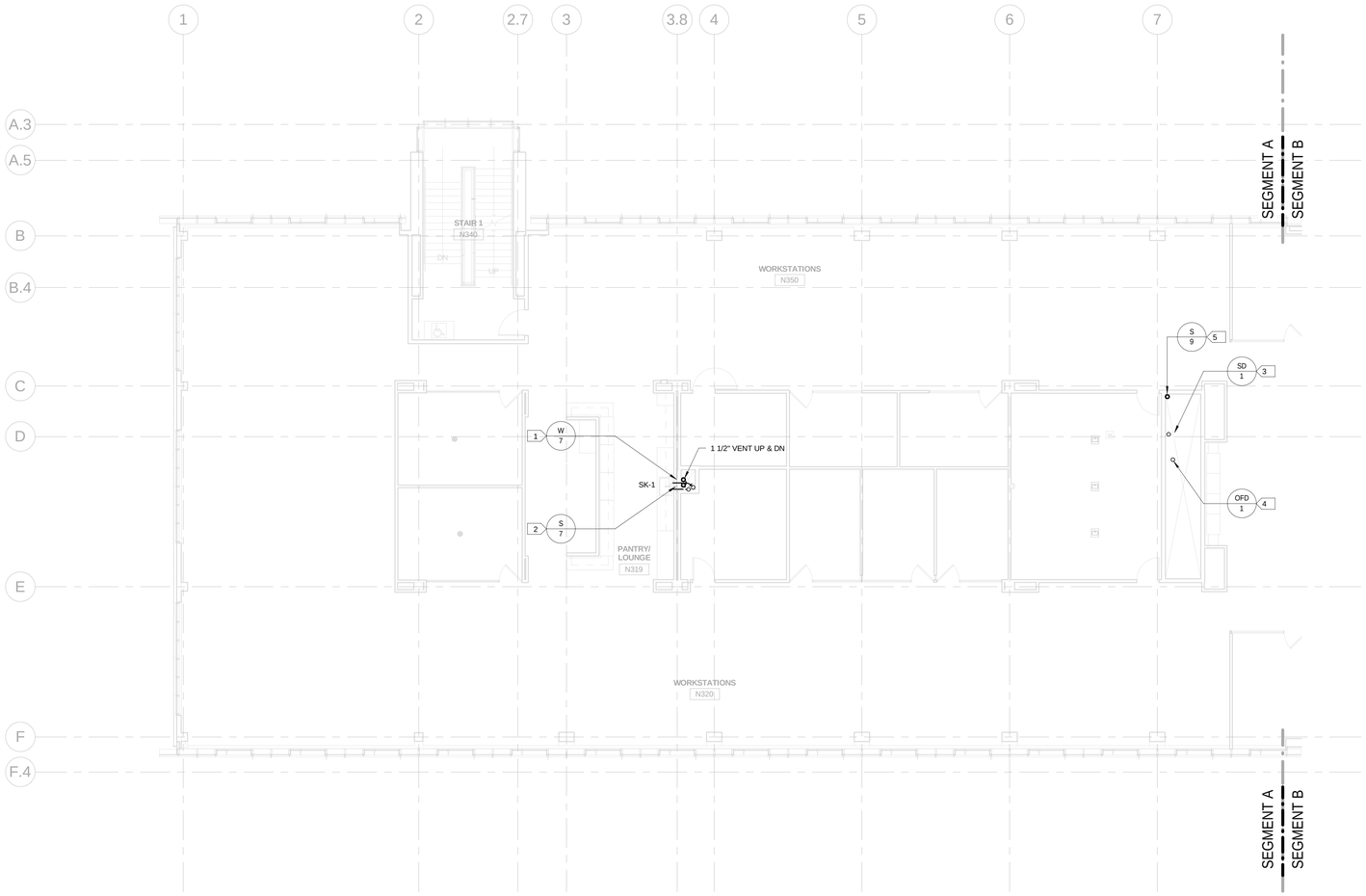

1 LEVEL 3 PLUMBING PLAN - SEGMENT A

P-103A REF. SCALE: 1/8" = 1'-0"

10/12/2012 100% SUBMITTAL

NORTH

1/8"=1'-0" 8' 4' 0 8' 16'

AECOM

AECOM TECHNICAL SERVICES, INC.
3101 WILSON BOULEVARD
SUITE 900
ARLINGTON, VA 22201

T: 703-682-4900 F: 703.682.4901
www.aecom.com

SEAL AREA

STATE OF MARYLAND
RICHARD TASHMAN
18112
PROFESSIONAL ENGINEER

KEY PLAN

SEGMENT - A

REV	DATE	DESCRIPTION	S&R BR.	CUSTOMER	PM	SECT. HEAD

	INITIALS	DATE
DRAWN BY	MM	
CHECKED BY	DTM	
A-E MANAGER	EW	
ENVIRONMENTAL BRANCH	JH	
SAFETY BRANCH	CS	
CM	MMD	
PM	RWP	
CUSTOMER	JWB	
ENG. BRANCH	DGL	

LEVEL 3 PLUMBING PLAN - SEGMENT A

P-103A

FLIGHT PROJECTS BUILDING

NATIONAL AERONAUTICS AND SPACE ADMINISTRATION

GODDARD SPACE FLIGHT CENTER GREENBELT, MARYLAND
FACILITIES MANAGEMENT DIVISION

DATE ISSUED	CoF CODE OR WR#	AECOM PROJECT NO.	SCALE
07/12/2012	12GXAZ	60187636	1/8" = 1'-0"

FILE DATE: 10/10/2012 4:10:25 PM

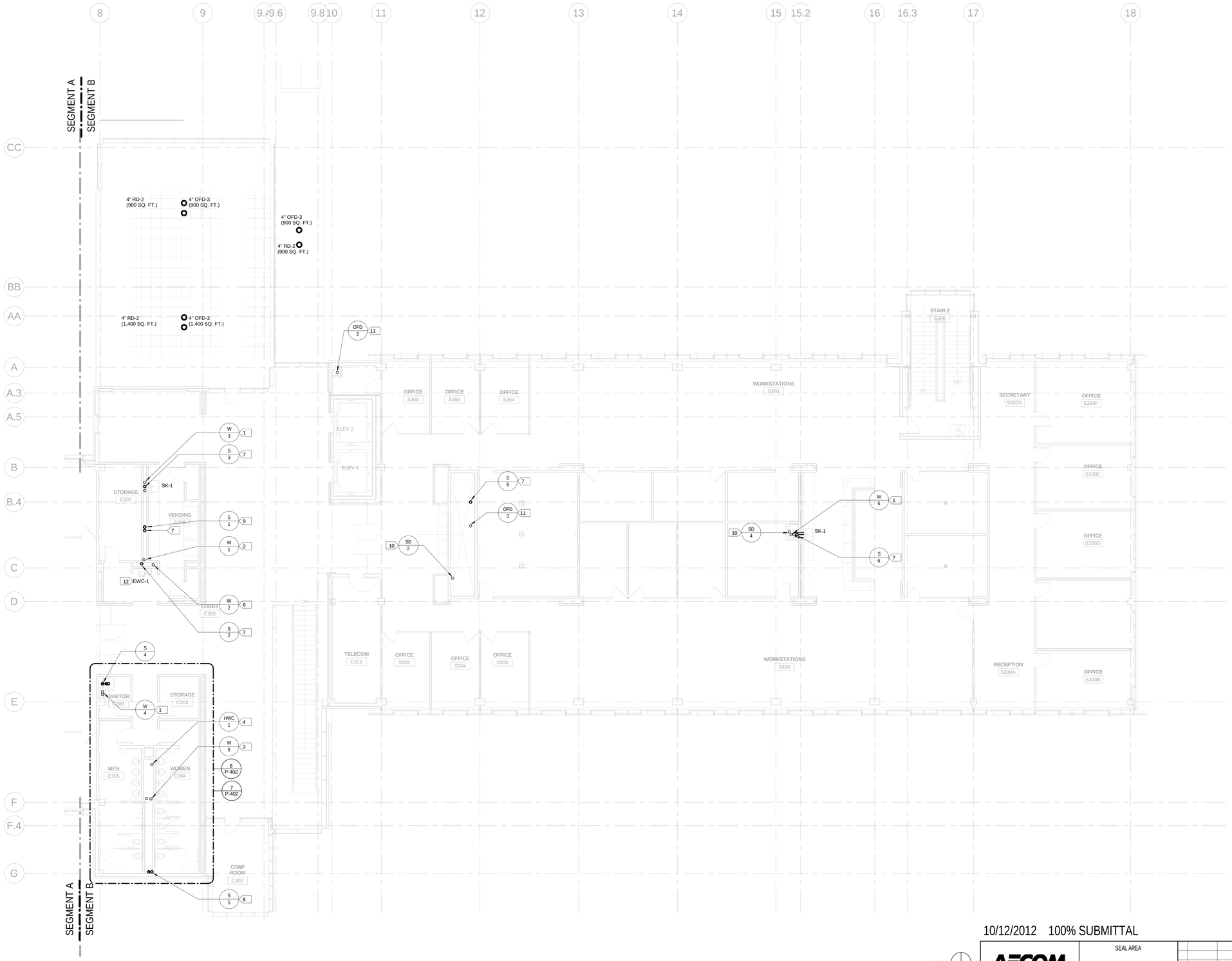

SPECIFIC NOTES

1. 3/4" CW & HW UP & DN.
2. 3/4" HWC UP & DN.
3. 2" CW & 1" HW UP, 2 1/2" CW & 1 1/2" HW DN.
4. 1 1/4" HWC UP & DN.
5. NOT USED.
6. 3/4" CW UP & DN.
7. 3" SAN UP & DN.
8. 4" SAN UP & DN , 3" V UP & DN.
9. 3" V UP & DN.
10. 8" SD UP & DN.
11. 8" OFD UP & DN.
12. ELECTRIC WATER COOLER, GOMARS #WAC003

1 LEVEL 3 PLUMBING PLAN - SEGMENT B

P-103B REF. SCALE: 1/8" = 1'-0"

10/12/2012 100% SUBMITTAL

NORTH

1/8"=1'-0" 8' 4' 0 8' 16'

AECOM

AECOM TECHNICAL SERVICES, INC.
3101 WILSON BOULEVARD
SUITE 900
ARLINGTON, VA 22201

T: 703-682-4900 F: 703.682.4901
www.aecom.com

SEAL AREA

STATE OF MARYLAND
GODDARD TASK ENGINEER
18113
PROFESSIONAL ENGINEER

KEY PLAN

SEGMENT - B

REV	DATE	DESCRIPTION	S&R BR.	CUSTOMER	PM	SECT. HEAD

	INITIALS	DATE
DRAWN BY	MM	
CHECKED BY	DTM	
A-E MANAGER	EW	
ENVIRONMENTAL BRANCH	JH	
SAFETY BRANCH	CS	
CM	MMD	
PM	RWP	
CUSTOMER	JWB	
ENG. BRANCH	DGL	

LEVEL 3 PLUMBING PLAN - SEGMENT B

P-103B

FLIGHT PROJECTS BUILDING

NATIONAL AERONAUTICS AND SPACE ADMINISTRATION

GODDARD SPACE FLIGHT CENTER GREENBELT, MARYLAND
FACILITIES MANAGEMENT DIVISION

DATE ISSUED	CoF CODE OR WR#	AECOM PROJECT NO.	SCALE
07/12/2012	12GXAZ	60187636	1/8" = 1'-0"

FILE DATE: 10/10/2012 4:10:36 PM

SPECIFIC NOTES

1. 3/4" CW & HW DN.
2. 3" SAN UP TO FD-2.
3. 3" SAN DN.
4. 3" V UP.
5. 3" V UP TO VTR.
6. 4" SD UP TO RD-1.
7. 6" SD UP.
8. 8" SD DN.
9. 6" OFD UP TO OFD-1.
10. 8" OFD DN.

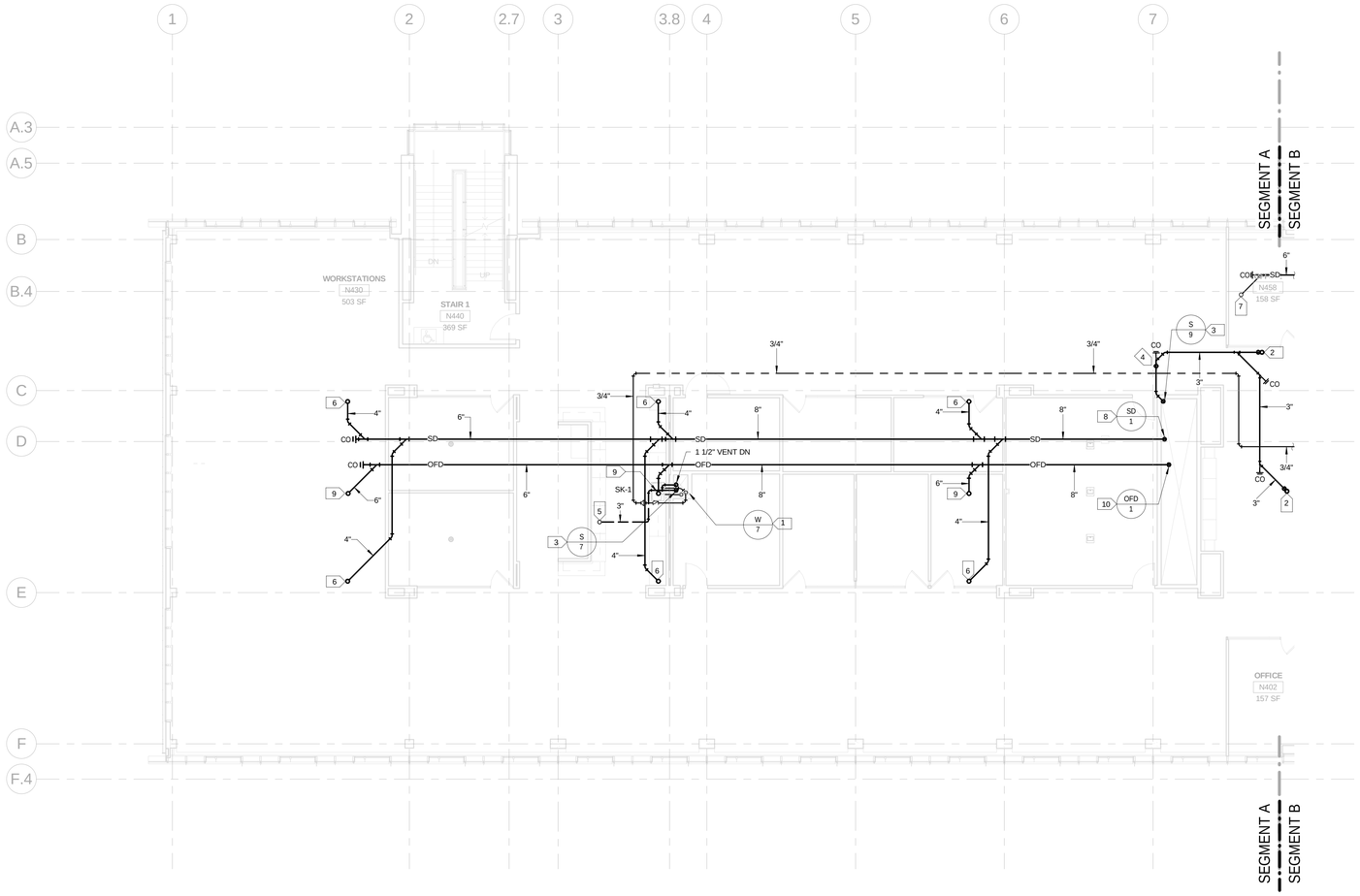

1 LEVEL 4 PLUMBING PLAN - SEGMENT A

P-104A REF. SCALE: 1/8" = 1'-0"

10/12/2012 100% SUBMITTAL

NORTH

1/8"=1'-0" 8' 4' 0 8' 16'

AECOM

AECOM TECHNICAL SERVICES, INC.
3101 WILSON BOULEVARD
SUITE 900
ARLINGTON, VA 22201

T: 703-682-4900 F: 703.682.4901
www.aecom.com

SEAL AREA

STATE OF MARYLAND
RICHARD TASHMAN
18112
PROFESSIONAL ENGINEER

KEY PLAN

SEGMENT - A

REV	DATE	DESCRIPTION	S&R BR.	CUSTOMER	PM	SECT. HEAD

	INITIALS	DATE
DRAWN BY	MM	
CHECKED BY	DTM	
A-E MANAGER	EW	
ENVIRONMENTAL BRANCH	JH	
SAFETY BRANCH	CS	
CM	MMD	
PM	RWP	
CUSTOMER	JWB	
ENG. BRANCH	DGL	

LEVEL 4 PLUMBING PLAN - SEGMENT A

P-104A

FLIGHT PROJECTS BUILDING

NATIONAL AERONAUTICS AND SPACE ADMINISTRATION

GODDARD SPACE FLIGHT CENTER GREENBELT, MARYLAND
FACILITIES MANAGEMENT DIVISION

DATE ISSUED	CoF CODE OR WR#	AECOM PROJECT NO.	SCALE
07/12/2012	12GXAZ	60187636	1/8" = 1'-0"

FILE DATE: 10/10/2012 4:10:42 PM

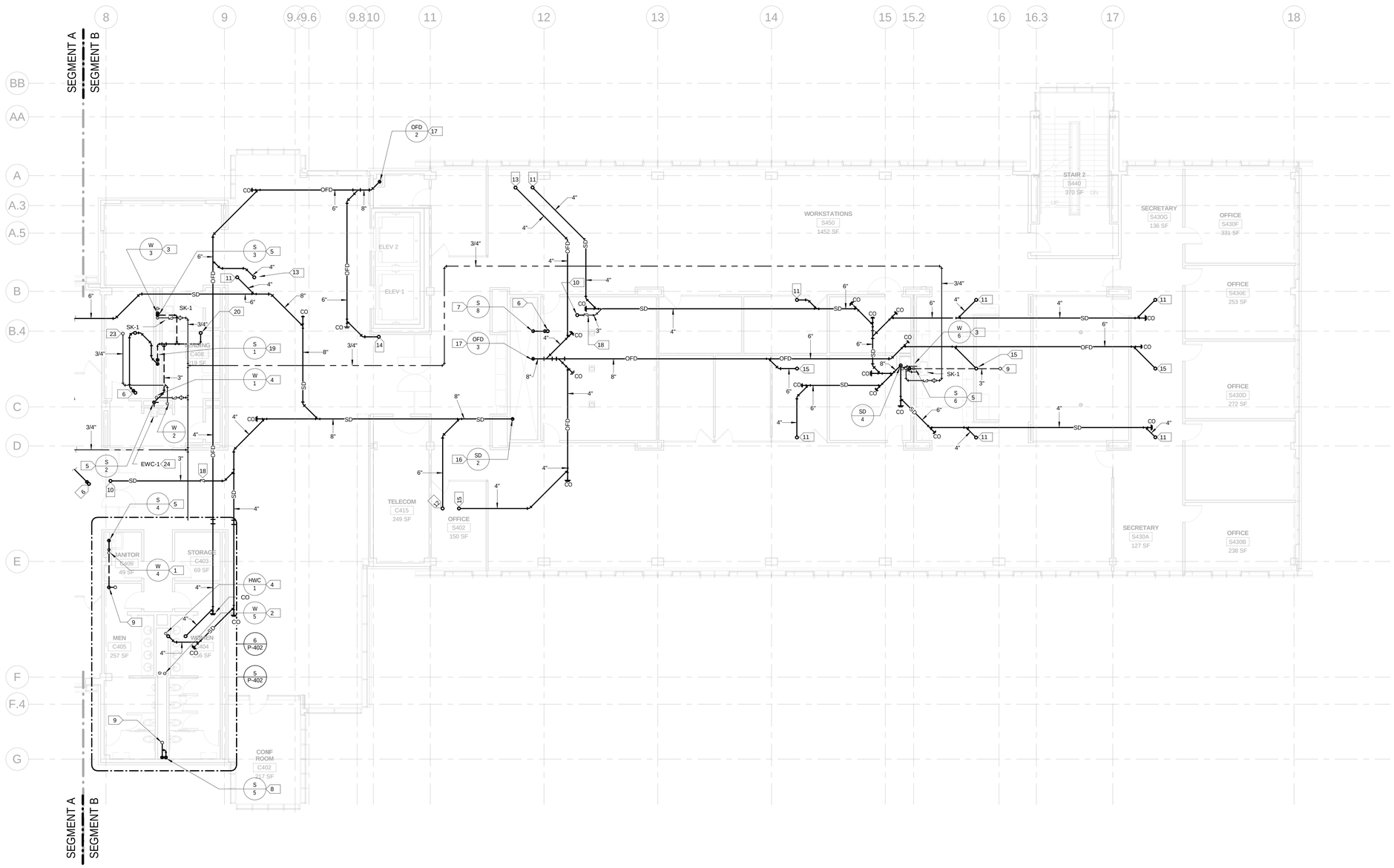

1 LEVEL 4 PLUMBING PLAN - SEGMENT B

P-104B REF. SCALE: 1/8" = 1'-0"

SPECIFIC NOTES

1. 3/4" CW DN & 3/4" HW DN.
2. 2" CW & 1" HW DN.
3. 3/4" CW & HW DN.
4. 3/4" HWC DN.
5. 3" SAN DN.
6. 3" SAN UP TO FD-2.
7. 3" SAN DN, 3" V UP.
8. 4" SAN DN, 3" V DN.
9. 3" V UP TO VTR.
10. 3" SD UP TO OSD.
11. 4" SD UP TO RD-1.
12. 6" SD UP TO RD-1.
13. 4" OFD UP TO OFD-2.
14. 6" OFD UP.
15. 6" OFD UP TO OFD-1.
16. 8" SD DN.
17. 8" OFD DN.
18. BACKWATER VALVE.
19. 3" V DN, 3" SAN DN.
20. 3" V UP.
21. NOT USED.
22. NOT USED.
23. 3/4" CW UP.
24. ELECTRIC WATER COOLER, GOMARS #WAC004

10/12/2012 100% SUBMITTAL

NORTH

1/8"=1'-0" 8' 4' 0 8' 16'

AECOM

AECOM TECHNICAL SERVICES, INC.
3101 WILSON BOULEVARD
SUITE 900
ARLINGTON, VA 22201

T: 703-682-4900 F: 703.682.4901
www.aecom.com

SEAL AREA

STATE OF MARYLAND
DOUGLAS TASHMAN
18113
PROFESSIONAL ENGINEER

KEY PLAN

SEGMENT - B

REV	DATE	DESCRIPTION	S&R BR.	CUSTOMER	PM	SECT. HEAD

	INITIALS	DATE
DRAWN BY	MM	
CHECKED BY	DTM	
A-E MANAGER	EW	
ENVIRONMENTAL BRANCH	JH	
SAFETY BRANCH	CS	
CM	MMD	
PM	RWP	
CUSTOMER	JWB	
ENG. BRANCH	DGL	

LEVEL 4 PLUMBING PLAN - SEGMENT B

P-104B

FLIGHT PROJECTS BUILDING

NATIONAL AERONAUTICS AND SPACE ADMINISTRATION

GODDARD SPACE FLIGHT CENTER GREENBELT, MARYLAND
FACILITIES MANAGEMENT DIVISION

DATE ISSUED	CoF CODE OR WR#	AECOM PROJECT NO.	SCALE
07/12/2012	12GXAZ	60187636	1/8" = 1'-0"

FILE DATE: 10/10/2012 4:10:53 PM

SPECIFIC NOTES

1. 6" SD DN.
2. 3" V DN, 3" V UP TO VTR

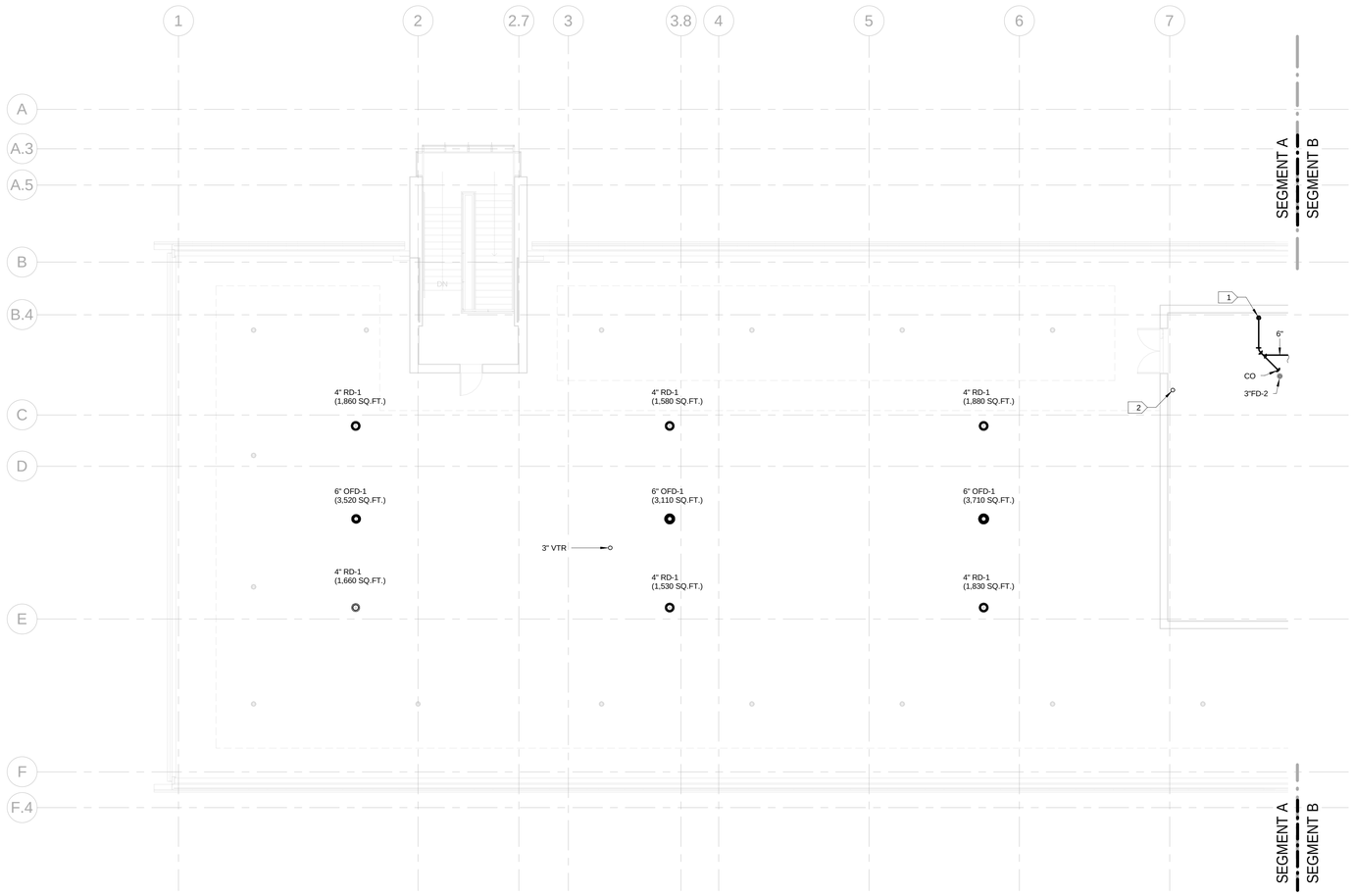

1 MAIN ROOF/ PENTHOUSE LEVEL PLUMBING PLAN - SEGMENT A

P-105A REF. SCALE: 1/8" = 1'-0"

10/12/2012 100% SUBMITTAL

NORTH

1/8"=1'-0" 8' 4' 0 8' 16'

AECOM

AECOM TECHNICAL SERVICES, INC.
3101 WILSON BOULEVARD
SUITE 900
ARLINGTON, VA 22201

T: 703-682-4900 F: 703.682.4901
www.aecom.com

SEAL AREA

STATE OF MARYLAND
GOOD TASHAKKOR
18112
PROFESSIONAL ENGINEER

KEY PLAN

SEGMENT - A

REV	DATE	DESCRIPTION	S&R BR.	CUSTOMER	PM	SECT. HEAD

	INITIALS	DATE
DRAWN BY	MM	
CHECKED BY	DTM	
A-E MANAGER	EW	
ENVIRONMENTAL BRANCH	JH	
SAFETY BRANCH	CS	
CM	MMD	
PM	RWP	
CUSTOMER	JWB	
ENG. BRANCH	DGL	

MAIN ROOF/ PENTHOUSE PLUMBING PLAN - SEGMENT A

P-105A

FLIGHT PROJECTS BUILDING

NATIONAL AERONAUTICS AND SPACE ADMINISTRATION

GODDARD SPACE FLIGHT CENTER GREENBELT, MARYLAND
FACILITIES MANAGEMENT DIVISION

DATE ISSUED	CoF CODE OR WR#	AECOM PROJECT NO.	SCALE
07/12/2012	12GXAZ	60187636	1/8" = 1'-0"

FILE DATE: 10/10/2012 4:10:59 PM

SPECIFIC NOTES

1. NOT USED
2. NOT USED
3. 4" UP TO OFD-2
4. 4" UP TO RD-1
5. 6" OFD DN.
6. 3" V UP UP TO VTR
7. 3" SAN DN, 3" V UP.
8. 4" SAN DN, 3" V UP.
9. DOMESTIC WATER HYDROPNEUMATIC TANK, UPV001.
10. 3/4" CW DN.

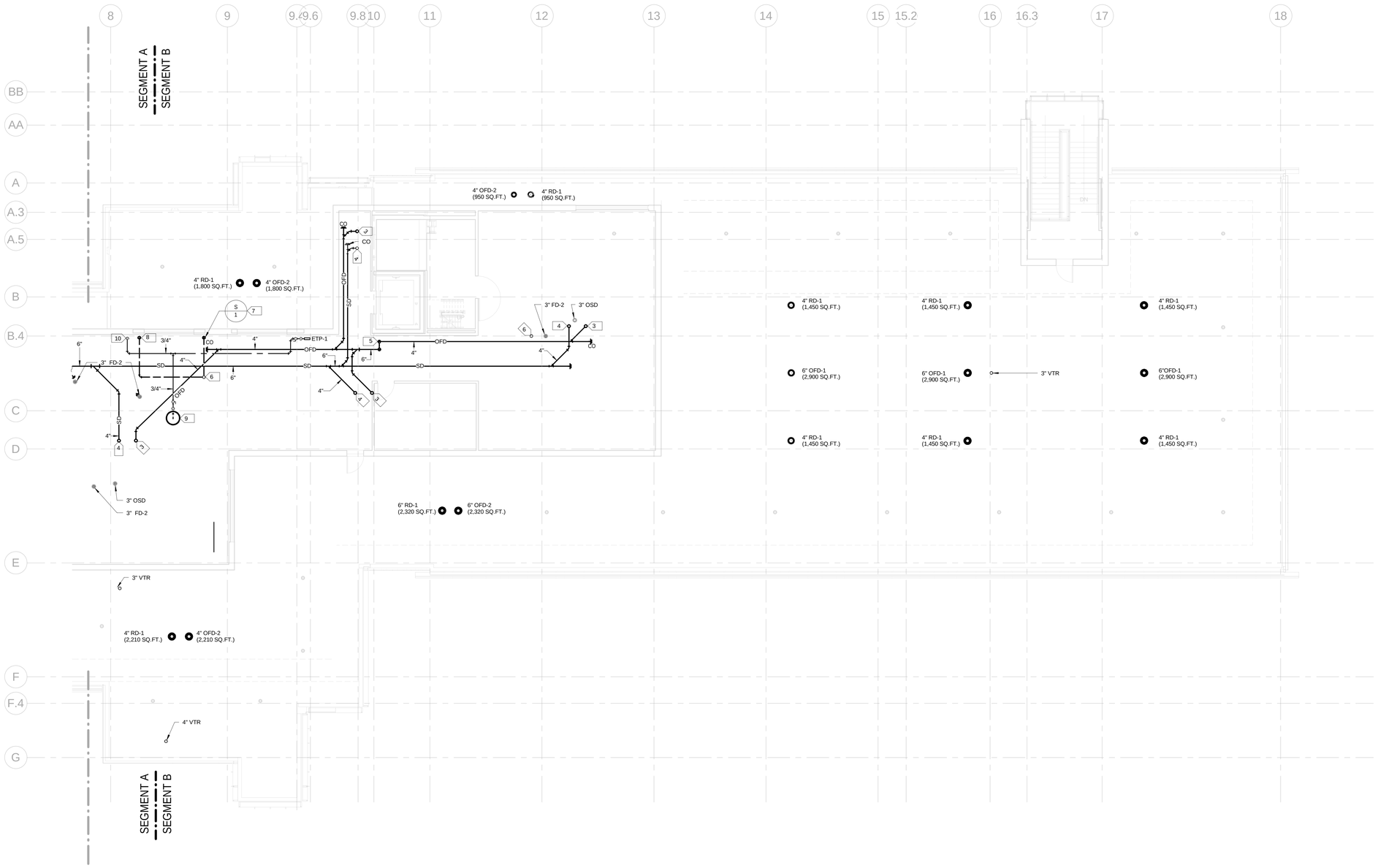

1 MAIN ROOF/ PENTHOUSE PLUMBING PLAN - SEGMENT B

P-105B REF. SCALE: 1/8" = 1'-0"

10/12/2012 100% SUBMITTAL

NORTH

1/8"=1'-0" 8' 4' 0 8' 16'

AECOM

AECOM TECHNICAL SERVICES, INC.
3101 WILSON BOULEVARD
SUITE 900
ARLINGTON, VA 22201

T: 703-682-4900 F: 703.682.4901
www.aecom.com

SEAL AREA

STATE OF MARYLAND
MOOD TASHAKKOR
18112
PROFESSIONAL ENGINEER

KEY PLAN

SEGMENT - A

REV	DATE	DESCRIPTION	S&R BR.	CUSTOMER	PM	SECT. HEAD

	INITIALS	DATE
DRAWN BY	MM	
CHECKED BY	DTM	
A-E MANAGER	EW	
ENVIRONMENTAL BRANCH	JH	
SAFETY BRANCH	CS	
CM	MMD	
PM	RWP	
CUSTOMER	JWB	
ENG. BRANCH	DGL	

MAIN ROOF/ PENTHOUSE PLUMBING PLAN - SEGMENT B

P-105B

FLIGHT PROJECTS BUILDING

NATIONAL AERONAUTICS AND SPACE ADMINISTRATION

GODDARD SPACE FLIGHT CENTER GREENBELT, MARYLAND
FACILITIES MANAGEMENT DIVISION

DATE ISSUED	CoF CODE OR WR#	AECOM PROJECT NO.	SCALE
07/12/2012	12GXAZ	60187636	1/8" = 1'-0"

FILE DATE: 10/10/2012 4:11:04 PM

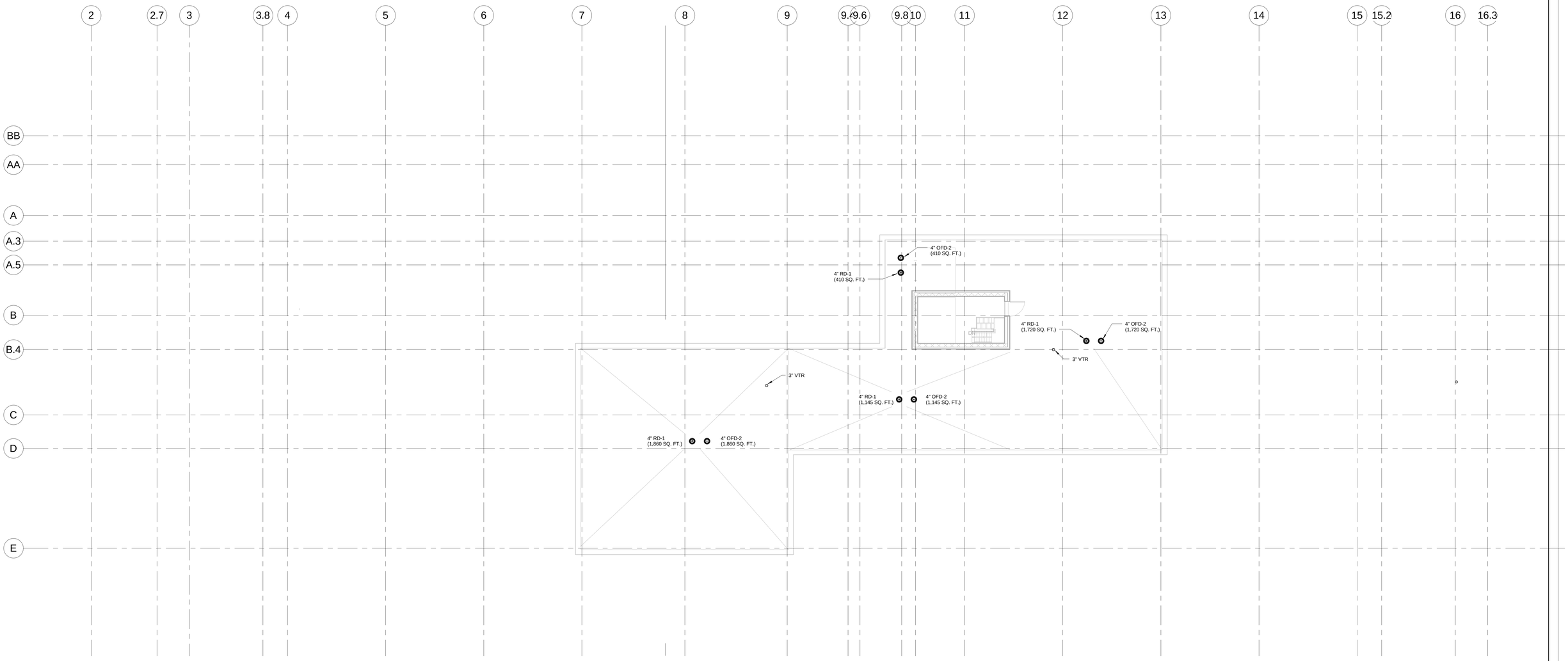

1 PENTHOUSE ROOF PLUMBING PLAN

P-106 REF. SCALE: 1/8" = 1'-0"

10/12/2012 100% SUBMITTAL

NORTH

1/8"=1'-0" 8' 4' 0 8' 16'

AECOM

AECOM TECHNICAL SERVICES, INC.
3101 WILSON BOULEVARD
SUITE 900
ARLINGTON, VA 22201

T: 703-682-4900 F: 703.682.4901
www.aecom.com

SEAL AREA

STATE OF MARYLAND
MOOD TASHAKKOR
18112
PROFESSIONAL ENGINEER

KEY PLAN

SEGMENT - A

REV	DATE	DESCRIPTION	S&R BR.	CUSTOMER	PM	SECT. HEAD

	INITIALS	DATE
DRAWN BY	MM	
CHECKED BY	DTM	
A-E MANAGER	EW	
ENVIRONMENTAL BRANCH	JH	
SAFETY BRANCH	CS	
CM	MMD	
PM	RWP	
CUSTOMER	JWB	
ENG. BRANCH	DGL	

PENTHOUSE ROOF PLUMBING PLAN

P-106

FLIGHT PROJECTS BUILDING

NATIONAL AERONAUTICS AND SPACE ADMINISTRATION

GODDARD SPACE FLIGHT CENTER GREENBELT, MARYLAND
FACILITIES MANAGEMENT DIVISION

DATE ISSUED	CoF CODE OR WR#	AECOM PROJECT NO.	SCALE
07/12/2012	12GXAZ	60187636	1/8" = 1'-0"

FILE DATE: 10/10/2012 4:11:07 PM

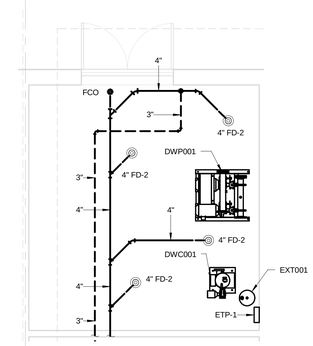

5 LEVEL 1 - PUMP ROOM ENLARGED PLAN - WASTE PIPING

P-401 REF. P-101B SCALE: 1/4" = 1'-0"

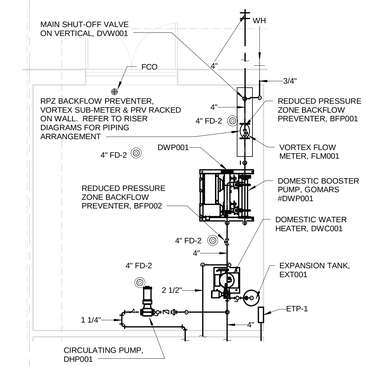

6 LEVEL 1 - PUMP ROOM ENLARGED PLAN - WATER PIPNG

P-401 REF. P-101B SCALE: 1/4" = 1'-0"

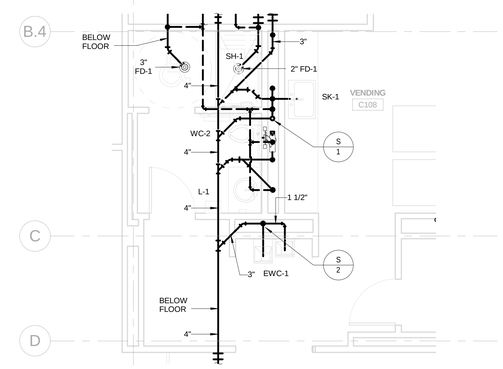

3 LEVEL 1 - SHOWER/ VENDING ENLARGED PLAN - WASTE PIPING

P-401 REF. P-101B SCALE: 1/4" = 1'-0"

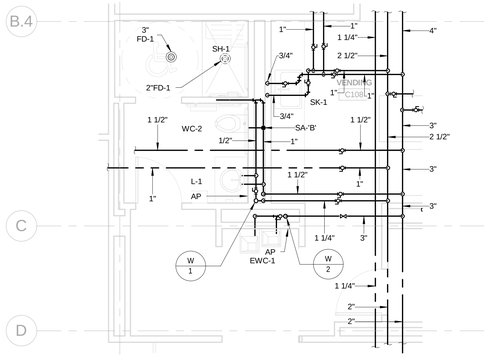

4 LEVEL 1 - SHOWER/ VENDING ENLARGED PLAN - WATER PIPING

P-401 REF. P-101B SCALE: 1/4" = 1'-0"

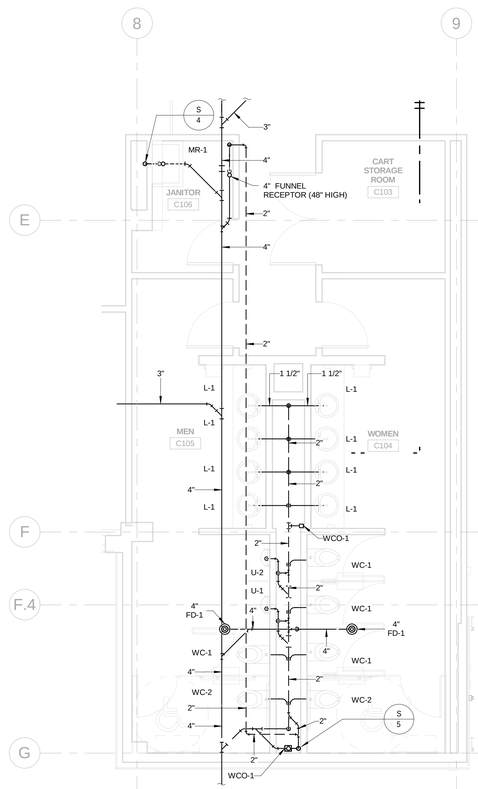

1 LEVEL 1 - CORE TOILETS ENLARGED PLAN - WASTE PIPING

P-401 REF. P-101B SCALE: 1/4" = 1'-0"

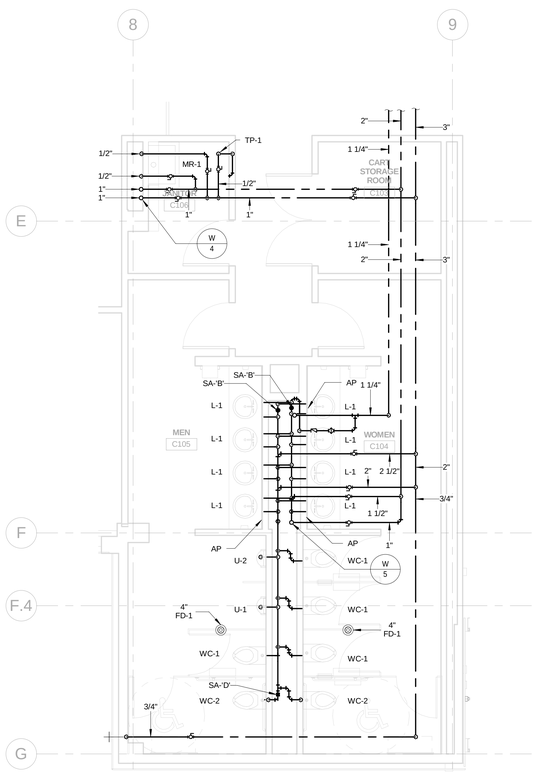

2 LEVEL 1 - CORE TOILETS ENLARGED PLAN - WATER PIPING

P-401 REF. P-101B SCALE: 1/4" = 1'-0"

1/4"=1'-0" 4' 2' 0 4' 8'

10/12/2012 100% SUBMITTAL

AECOM

AECOM TECHNICAL SERVICES, INC.
3101 WILSON BOULEVARD
SUITE 900
ARLINGTON, VA 22201

T: 703-682-4900 F: 703.682.4901
www.aecom.com

SEAL AREA

STATE OF MARYLAND
RICHARD TASHMAN
18112
PROFESSIONAL ENGINEER

KEY PLAN

REV	DATE	DESCRIPTION	S&R BR.	CUSTOMER	PM	SECT. HEAD

	INITIALS	DATE
DRAWN BY	MM	
CHECKED BY	DTM	
A-E MANAGER	EW	
ENVIRONMENTAL BRANCH	JH	
SAFETY BRANCH	CS	
CM	MMD	
PM	RWP	
CUSTOMER	JWB	
ENG. BRANCH	DGL	

LEVEL 1 - ENGLARGED PLUMBING PLANS

P-401

FLIGHT PROJECTS BUILDING

NATIONAL AERONAUTICS AND SPACE ADMINISTRATION

GODDARD SPACE FLIGHT CENTER GREENBELT, MARYLAND
FACILITIES MANAGEMENT DIVISION

DATE ISSUED	CoF CODE OR WR#	AECOM PROJECT NO.	SCALE
07/12/2012	12GXAZ	60187636	1/4" = 1'-0"

FILE DATE: 10/10/2012 4:11:12 PM

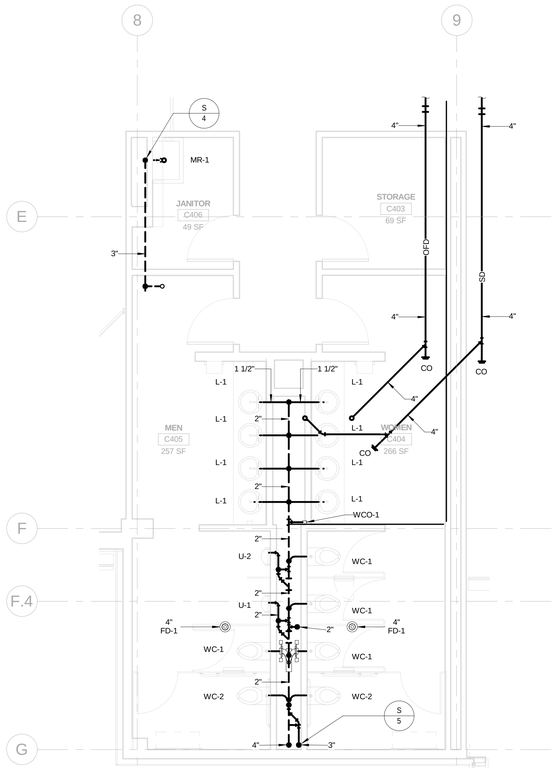

5 LEVEL 4 - CORE TOILETS ENLARGED PLAN - WASTE PIPING

P-402 REF. P-104B SCALE: 1/4" = 1'-0"

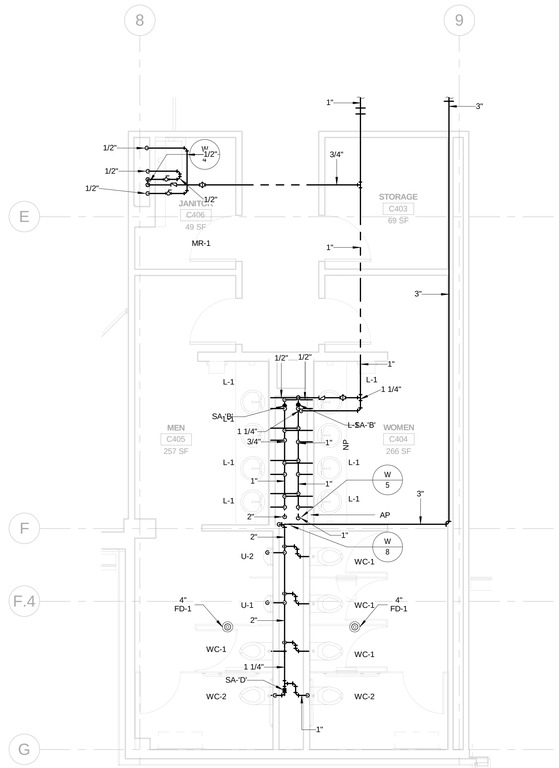

6 LEVEL 4 - CORE TOILETS ENLARGED PLAN - WATER PIPING

P-402 REF. P-104B SCALE: 1/4" = 1'-0"

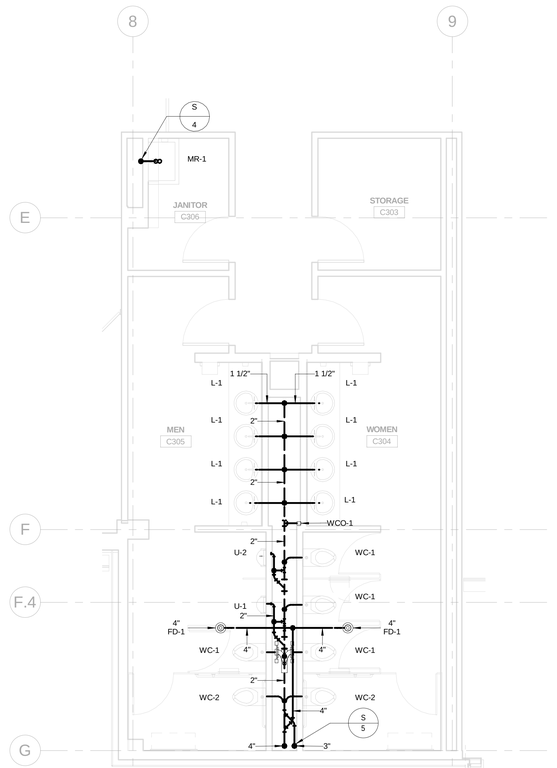

7 LEVEL 3 - CORE TOILETS ENLARGED PLAN - WASTE PIPING

P-402 REF. P-103B SCALE: 1/4" = 1'-0"

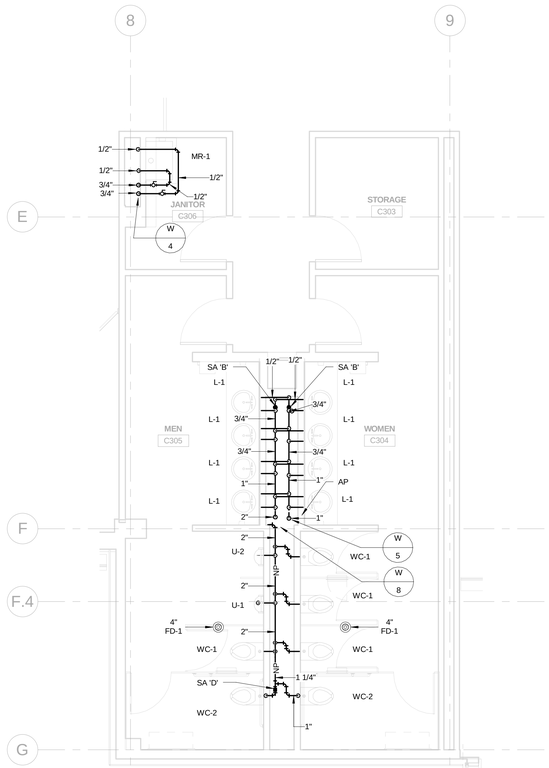

8 LEVEL 3 - CORE TOILETS ENLARGED PLAN - WATER PIPING

P-402 REF. P-103B SCALE: 1/4" = 1'-0"

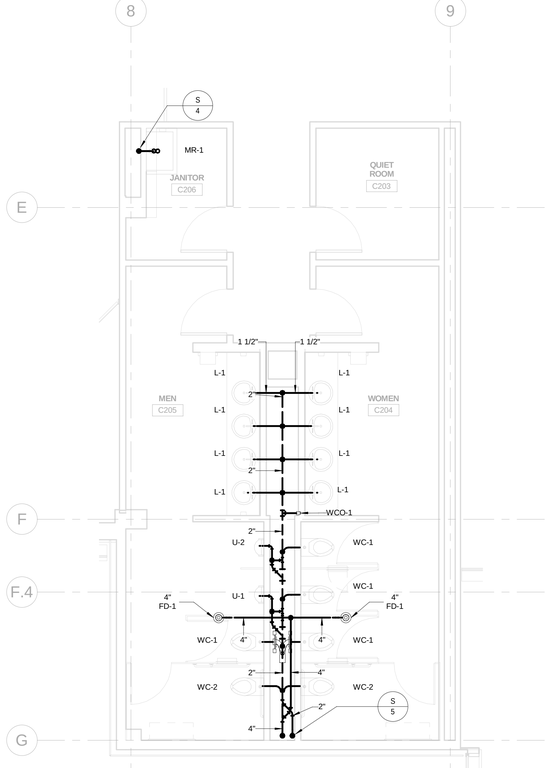

1 LEVEL 2 - CORE TOILETS ENLARGED PLAN - WASTE PIPING

P-402 REF. P-102B SCALE: 1/4" = 1'-0"

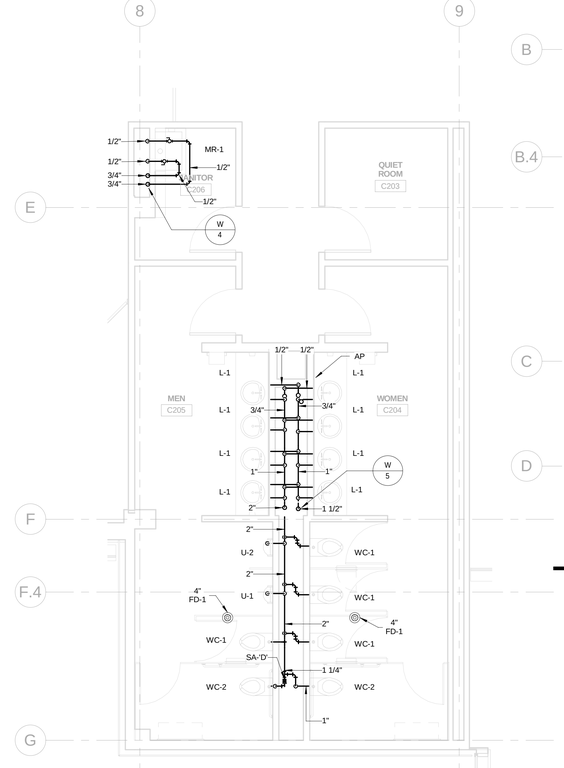

2 LEVEL 2 - CORE TOILETS ENLARGED PLAN - WATER PIPING

P-402 REF. P-102B SCALE: 1/4" = 1'-0"

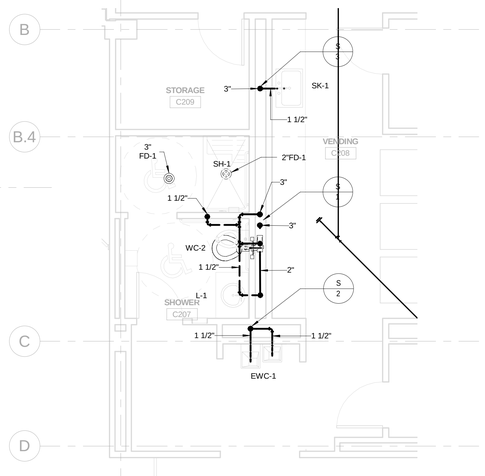

3 LEVEL 2 - SHOWER/ VENDING ENLARGED PLAN - WASTE PIPING

P-402 REF. P-102B SCALE: 1/4" = 1'-0"

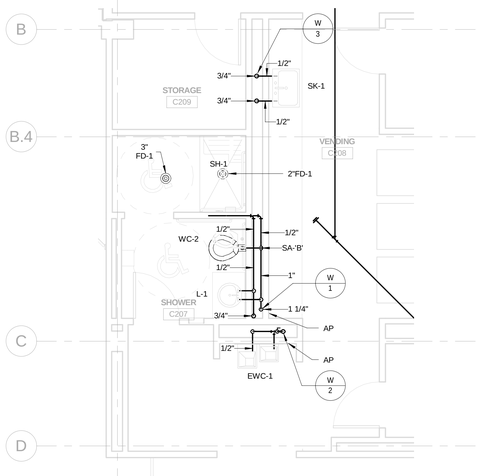

4 LEVEL 2 - SHOWER/ VENDING ENLARGED PLAN - WATER PIPING

P-402 REF. P-102B SCALE: 1/4" = 1'-0"

10/12/2012 100% SUBMITTAL

1/4"=1'-0" 4' 2' 0 4' 8'

AECOM

AECOM TECHNICAL SERVICES, INC.
3101 WILSON BOULEVARD
SUITE 900
ARLINGTON, VA 22201

T: 703-682-4900 F: 703.682.4901
www.aecom.com

SEAL AREA

STATE OF MARYLAND
GOODD TASHAKKORI
78112
PROFESSIONAL ENGINEER

KEY PLAN

REV	DATE	DESCRIPTION	S&R BR.	CUSTOMER	PM	SECT. HEAD

	INITIALS	DATE
DRAWN BY	MM	
CHECKED BY	DTM	
A-E MANAGER	EW	
ENVIRONMENTAL BRANCH	JH	
SAFETY BRANCH	CS	
CM	MMD	
PM	RWP	
CUSTOMER	JWB	
ENG. BRANCH	DGL	

LEVEL 2, 3, & 4 - ENLARGED PLUMBING PLANS

P-402

FLIGHT PROJECTS BUILDING

NATIONAL AERONAUTICS AND SPACE ADMINISTRATION

GODDARD SPACE FLIGHT CENTER GREENBELT, MARYLAND
FACILITIES MANAGEMENT DIVISION

DATE ISSUED	CoF CODE OR WR#	AECOM PROJECT NO.	SCALE
07/12/2012	12GXAZ	60187636	1/4" = 1'-0"

FILE DATE: 10/10/2012 4:11:18 PM

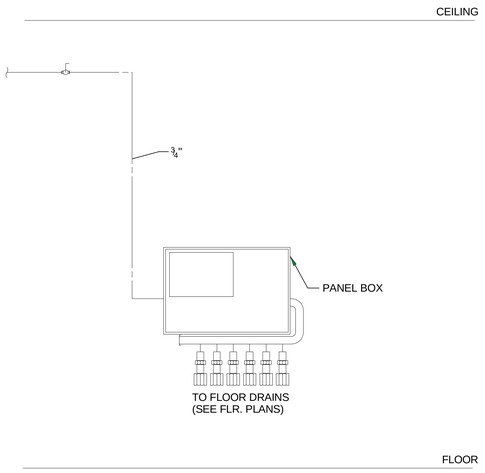

8 TRAP PRIMER PANEL (ETP-1) DIAGRAM

NO SCALE

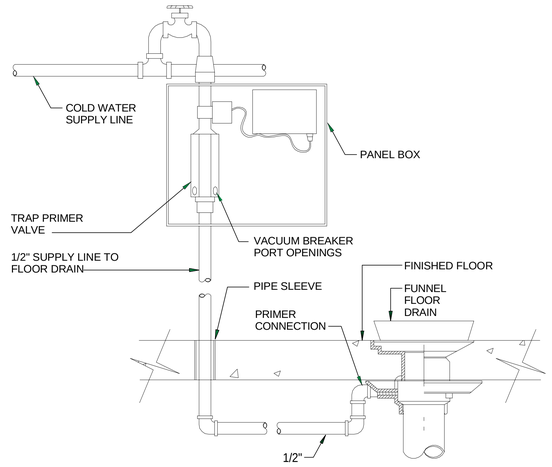

6 TRAP PRIMER (ETP-2)

NOT TO SCALE

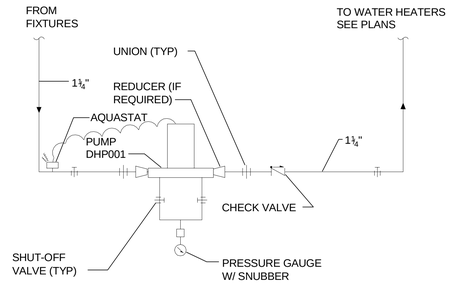

NOTE: REFER TO SCHEDULE FOR CAPACITY.

4 RECIRCULATING HOT WATER PUMP (RHWP) DETAIL (TYPICAL)

NO SCALE

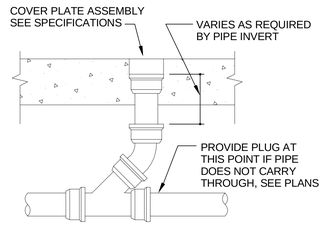

1 CLEANOUT: NO-HUB PIPING DETAIL

NO SCALE

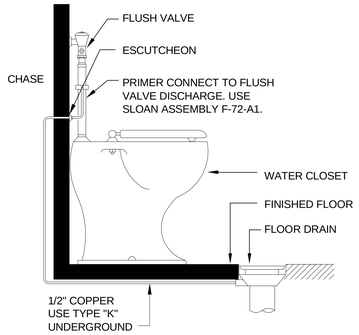

5 VACUUM BREAKER TRAP PRIMER (VBTP) DIAGRAM

NO TO SCALE

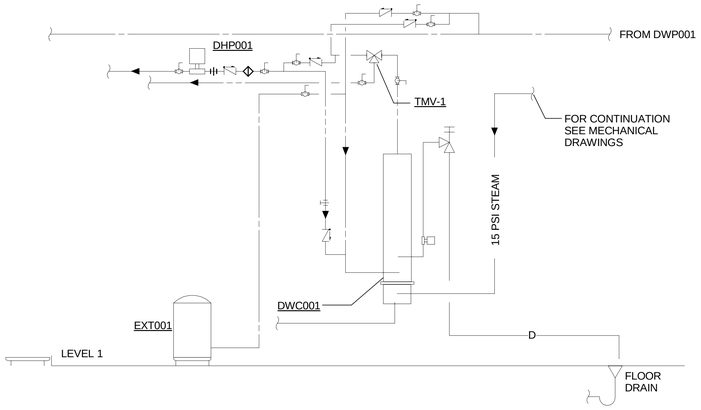

2 STEAM WATER HEATER DIAGRAM

NO TO SCALE

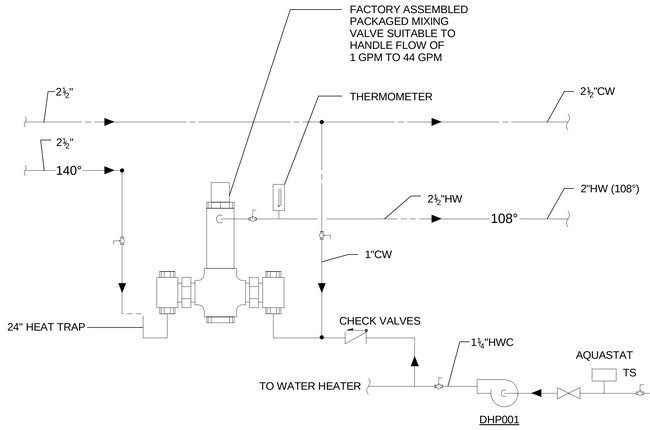

7 MIXING VALVE SCHEMATIC - TMV-1

NOT TO SCALE

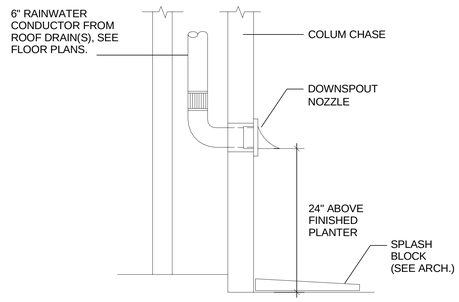

3 DOWNSPOUT NOZZLE DETAIL

NOTO SCALE

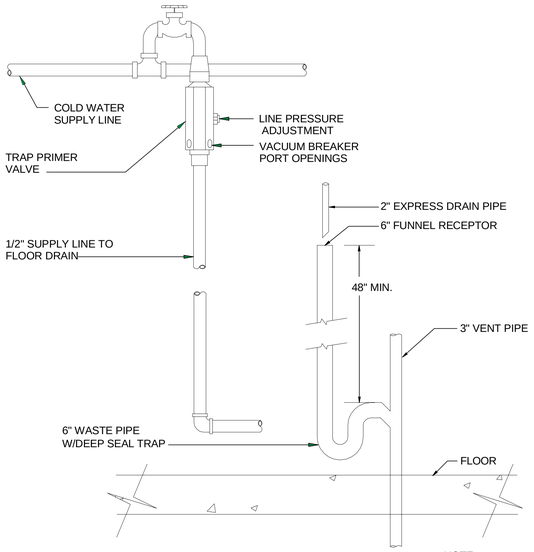

NOTE:
SECURE
STANDPIPE AND
INLET PIPE TO
WALL

9 TRAP PRIMER (TP-1)

NOT TO SCALE

10/12/2012 100% SUBMITTAL

AECOM

AECOM TECHNICAL SERVICES, INC.
3101 WILSON BOULEVARD
SUITE 900
ARLINGTON, VA 22201

T: 703-682-4900 F: 703.682.4901
www.aecom.com

SEAL AREA

STATE OF MARYLAND
GERALD TASHIMA
18113
PROFESSIONAL ENGINEER

KEY PLAN

REV	DATE	DESCRIPTION	S&R BR.	CUSTOMER	PM	SECT. HEAD

	INITIALS	DATE
DRAWN BY	Designer	
CHECKED BY	Checker	
A-E MANAGER	EW	
ENVIRONMENTAL BRANCH	JH	
SAFETY BRANCH	CS	
CM	MMD	
PM	RWP	
CUSTOMER	JWB	
ENG. BRANCH	DGL	

PLUMBING DETAILS

P-501

FLIGHT PROJECTS BUILDING

NATIONAL AERONAUTICS AND SPACE ADMINISTRATION

GODDARD SPACE FLIGHT CENTER GREENBELT, MARYLAND
FACILITIES MANAGEMENT DIVISION

DATE ISSUED	CoF CODE OR WR#	AECOM PROJECT NO.	SCALE
07/12/2012	12GXAZ	60187636	NOT TO SCALE

FILE DATE: 10/10/2012 4:11:20 PM

TRAP PRIMER SCHEDULE

ITEM DESIGNATION	LOCATION	INLET SIZE	OUTLET SIZE	REMARKS
ETP-1	MECHANICAL ROOM	3/4"	5/8"	ELECTRIC ACTIVATED, IN PANEL BOX
ETP-2	SERVER ROOM	1/2"	1/2"	ELECTRIC ACTIVATED, IN PANEL BOX
TP-1	ROOM C106	1/2"	1/2"	
VBTP	ROOM C105, C104	1/2"	1/2"	

EXPANSION TANK SCHEDULE

ITEM DESIGNATION	LOCATION	MAX. EXPANDED WATER (GAL)	TOTAL VOLUME (GAL)	REMARKS
EXT001	LEVEL ONE PUMP ROOM	1.3	7.4	150 PSI MAX WORKING PRESSURE, ASME

PLUMBING FIXTURE CONNECTION SCHEDULE

DESIGNATION	FIXTURE	WASTE	VENT	HW	CW	REMARKS
WC-1	WATER CLOSET	4"	2"	--	1"	WALL-HUNG, FLUSH VALVE, MANUALLY OPERATED 1.28 GPF
WC-2	WATER CLOSET	4"	2"	--	1"	WALL-HUNG, FLUSH VALVE, ADA, MANUALLY OPERATED 1.28 GPF
UR-1	URINAL	2"	1 1/2"	--	3/4"	WALL-HUNG, FLUSH VALVE, MANUALLY OPERATED 0.125GPF
UR-2	URINAL	2"	1 1/2"	--	3/4"	WALL-HUNG, FLUSH VALVE, ADA, MANUALLY OPERATED 0.125GPF
L-1	LAVATORY	1 1/2"	1 1/2"	1/2"	1/2"	UNDERMOUNT, ADA SENSOR FAUCET, BATTERY POWER, 0.5 GPM AERATOR
EWC-1	ELECTRIC WATER COOLER	1 1/2"	1 1/2"	--	1/2"	RECESSED MOUNT, BI-LEVEL, STAINLESS STEEL
SK-1	PANTRY SINK	1 1/2"	1 1/2"	1/2"	1/2"	COUNTER MOUNTED, STAINLESS STEEL, ADA, 1.5 GPM, DISPOSER
MR-1	MOP BASIN	3"	1 1/2"	1/2"	1/2"	FLOOR MOUNTED, 24"x36"x12", UTILITY FAUCET WITH VACUUM BREAKER, 60" HOSE, HOSE BRACKET
SH-1	SHOWER	2"	1 1/2"	1/2"	1/2"	36"x60", 1.5 GPM SHOWERHEAD, ADA, HANDHELD SHOWER

DRAIN SCHEDULE

ITEM DESIGNATION	LOCATION	STRAINER SIZE	STRAINER MATERIAL	REMARKS
FD-1	PUBLIC AREAS	-	SATIN NICKEL BRONZE	
FD-2	MECHANICAL AREAS	-	COATED CAST IRON	
OSD	MECH. AREAS/ LEVEL 1 CLG.	-	N/A	
RD-1	MAIN ROOF/ PH ROOF	-	COATED CAST IRON	FOR MODIFIED BITUMEN ROOF
RD-2	SYMPOSIUM ROOF	-	COATED CAST IRON	FOR GREEN ROOF/ STAINLESS STEEL MESH COVERED DOME
OFD-1	MAIN ROOF/ PH ROOF	-	COATED CAST IRON	NO STANDPIPE
OFD-2	MAIN ROOF/ PH ROOF	-	COATED CAST IRON	WITH 2" STANDPIPE
OFD-3	SYMPOSIUM ROOF		COATED CAST IRON	FOR GREEN ROOF/ STAINLESS STEEL MESH COVERED DOME, WITH 2" STANDPIPE

BOOSTER PUMP SCHEDULE

ITEM DESIGNATION	LOCATION	SERVICES	PUMP NO.	PUMP TYPE	CAPACITY (GPM)	TDH (FT WG)	MOTOR				REMARKS
							RPM	HP	VOLTS	PHASE	
DWP001	LEVEL 1 PUMP ROOM	ENTIRE BUILDING	1	END SUCTION	119	60	3500	5	460	3	65%/65% SPLIT WITH VFD AND 132 GALLON HYDROPNEUMATIC TANK (REMOTE IN PENTHOUSE)
			2	END SUCTION	119	60	3500	5	460	3	

STEAM FIRED WATER HEATER SCHEDULE

ITEM DESIGNATION	LOCATION	SERVICES	STORAGE CAPACITY (GAL)	RECOVERY AT 100°F RISE (GPM)	INPUT STEAM PRESSURE	MOTOR				REMARKS
						RPM	HP	VOLTS	PHASE	
DWC001	LEVEL 1 PUMP ROOM	ENTIRE BUILDING	N/A	26	15 PSI	N/A	N/A	N/A	N/A	DOUBLE WALL, 140°F TEMPERATURE

THERMOSTATIC MIXING VALVE SCHEDULE

ITEM	LOCATION	SERVICES	DEMAND (GPM)	PRESSURE DROP (PSI)	INLET TEMPERATURE	OUTLET TEMPERATURE	REMARKS
TMV-1	LEVEL ONE PUMP ROOM	ENTIRE BUILDING	38	10	140°F	108°F	
TMV-2	RESTROOMS	ENTIRE BUILDING	2	5	108°F	95°F	

SUMP PUMPS SCHEDULE

ITEM DESIGNATION	LOCATION	TYPE	CAPACITY (GPM)	TDH (FT WG)	MOTOR				BASIN SIZE	REMARKS
					RPM	HP	VOLTS	PHASE		
SUP001	ELEVATOR PIT	SIMPLEX SUBMERSIBLE, EFFLUENT	100	30	3600	2	460	3	2'x2'x2'	PROVIDE OIL MINDER CONTROL

RECIRCULATING PUMP SCHEDULE

ITEM DESIGNATION	LOCATION	SERVICES	PUMP TYPE	CAPACITY (GPM)	TDH (FT WG)					REMARKS
						RPM	HP	VOLTS	PHASE	
DHP001	LEVEL ONE PUMP ROOM	ENTIRE BUILDING	IN-LINE	4	5	3250	1/40	115	1	PROVIDE AQUASTAT ON PIPING

10/12/2012 100% SUBMITTAL

AECOM

AECOM TECHNICAL SERVICES, INC.
3101 WILSON BOULEVARD
SUITE 900
ARLINGTON, VA 22201

T: 703-682-4900 F: 703.682.4901
www.aecom.com

SEAL AREA

STATE OF MARYLAND
WOOD TASHMAN INC.
18112
PROFESSIONAL ENGINEER

KEY PLAN

REV	DATE	DESCRIPTION	S&R BR.	CUSTOMER	PM	SECT. HEAD

	INITIALS	DATE
DRAWN BY	MM	
CHECKED BY	DTM	
A-E MANAGER	EW	
ENVIRONMENTAL BRANCH	JH	
SAFETY BRANCH	CS	
CM	MMD	
PM	RWP	
CUSTOMER	JWB	
ENG. BRANCH	DGL	

PLUMBING SCHEDULES

P-601

FLIGHT PROJECTS BUILDING

NATIONAL AERONAUTICS AND SPACE ADMINISTRATION

GODDARD SPACE FLIGHT CENTER GREENBELT, MARYLAND
FACILITIES MANAGEMENT DIVISION

DATE ISSUED	CoF CODE OR WR#	AECOM PROJECT NO.	SCALE
07/12/2012	12GXAZ	60187636	NOT AT SCALE

FILE DATE: 10/10/2012 4:11:21 PM

GENERAL NOTES:

1. CONTRACTOR SHALL PROVIDE FLUSH VALVE TYPE TRAP PRIMERS FOR ALL FLOOR DRAINS IN ALL TOILET ROOMS AND SHOWER ROOMS. MECHANICAL SPACE FLOOR DRAIN TRAPS SHALL BE PRIMED USING ELECTRONIC TRAP PRIMER DEVICES.

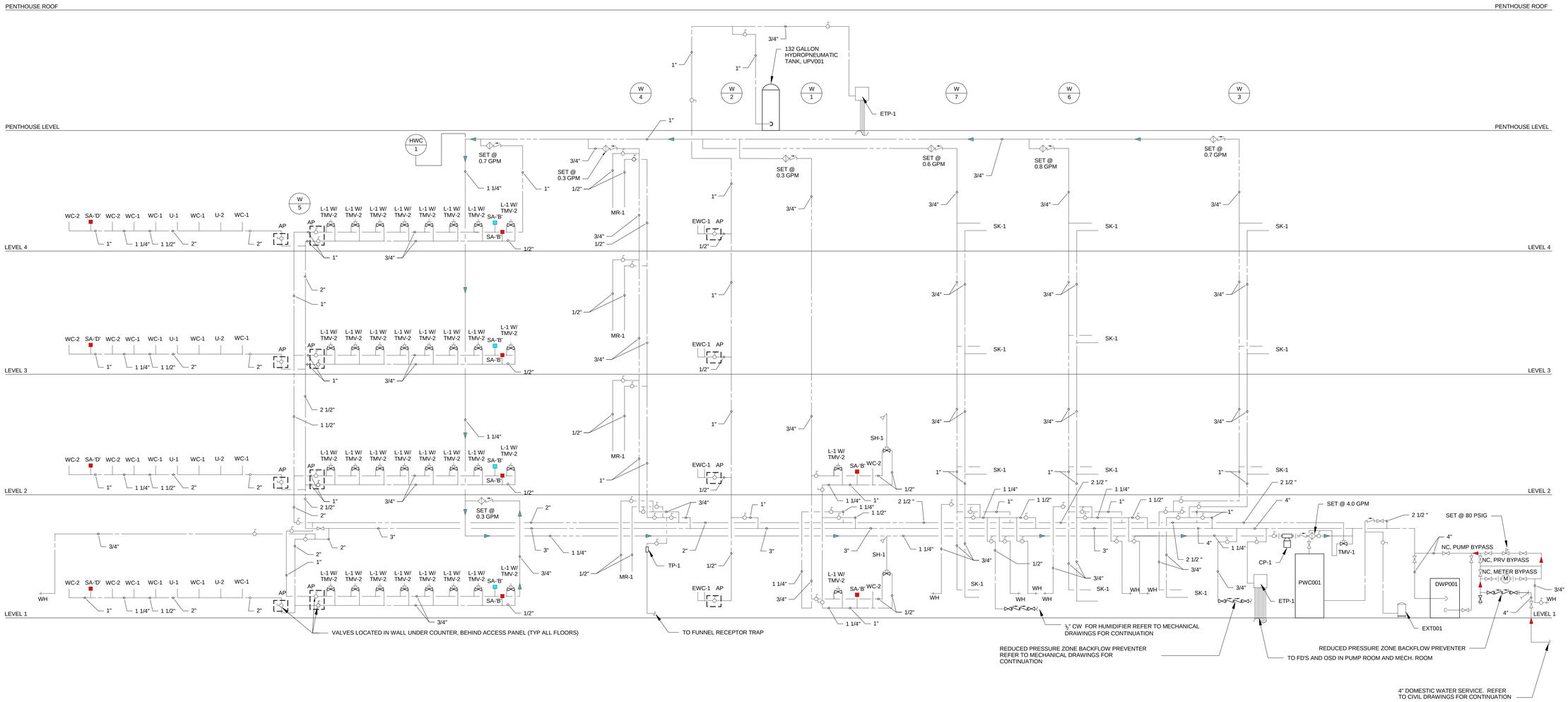

10/12/2012 100% SUBMITTAL

AECOM

AECOM TECHNICAL SERVICES, INC.
3101 WILSON BOULEVARD
SUITE 900
ARLINGTON, VA 22201

T: 703-682-4900 F: 703.682.4901
www.aecom.com

SEAL AREA

STATE OF MARYLAND
SOOD TASHMAJIAN
18113
PROFESSIONAL ENGINEER

KEY PLAN

REV	DATE	DESCRIPTION	S&R BR.	CUSTOMER	PM	SECT. HEAD

	INITIALS	DATE
DRAWN BY	MM	
CHECKED BY	DTM	
A-E MANAGER	EW	
ENVIRONMENTAL BRANCH	JH	
SAFETY BRANCH	CS	
CM	MMD	
PM	RWP	
CUSTOMER	JWB	
ENG. BRANCH	DGL	

DOMESTIC & NON-POTABLE WATER RISER DIAGRAM

P-701

FLIGHT PROJECTS BUILDING

NATIONAL AERONAUTICS AND SPACE ADMINISTRATION

GODDARD SPACE FLIGHT CENTER GREENBELT, MARYLAND
FACILITIES MANAGEMENT DIVISION

DATE ISSUED	CoF CODE OR WR#	AECOM PROJECT NO.	SCALE
07/12/2012	12GXAZ	60187636	NOT AT SCALE

FILE DATE: 10/10/2012 4:11:23 PM

GENERAL NOTES:

1. CONTRACTOR SHALL PROVIDE FLUSH VALVE TYPE TRAP PRIMERS FOR ALL FLOOR DRAINS IN ALL TOILET ROOMS AND SHOWER ROOMS. MECHANICAL SPACE FLOOR DRAIN TRAPS SHALL BE PRIMED USING ELECTRONIC TRAP PRIMER DEVICES.

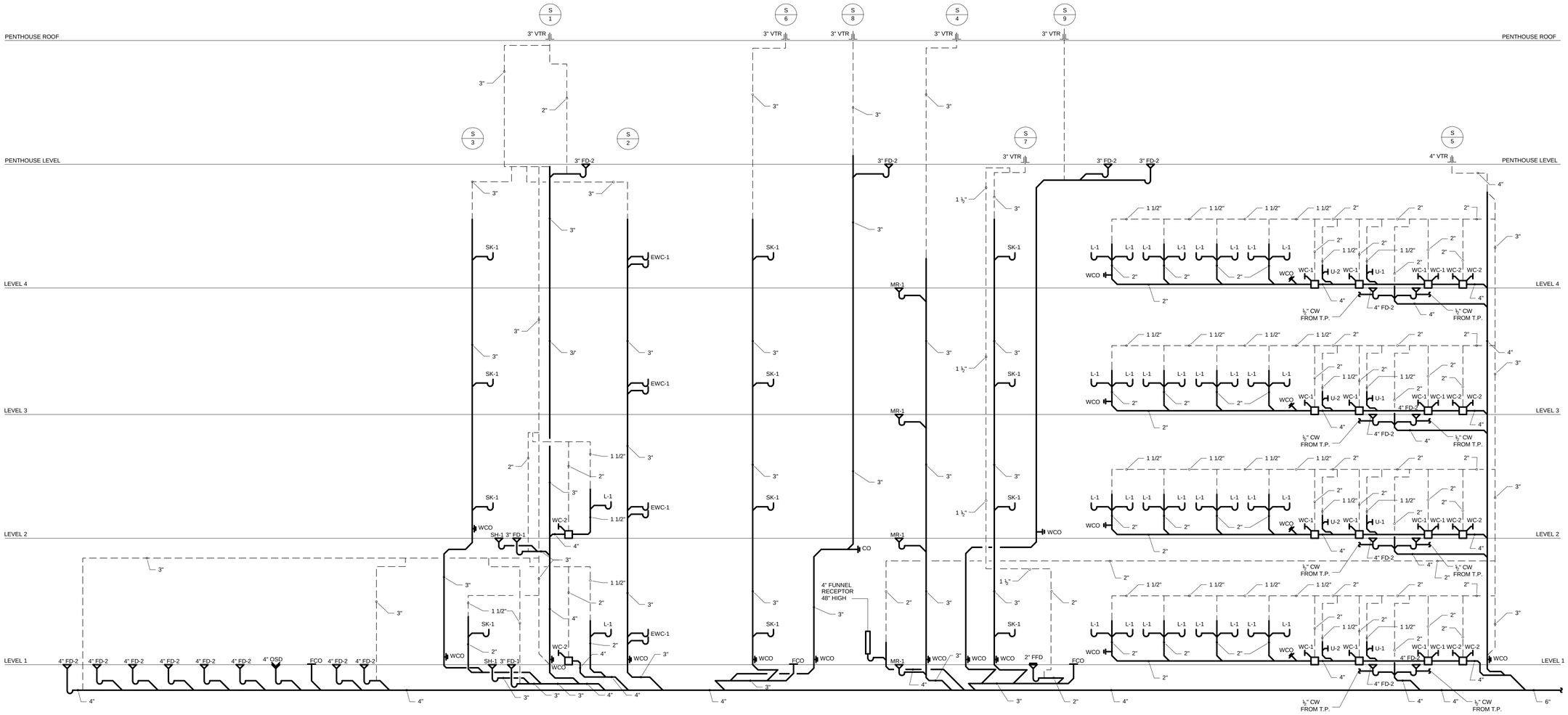

10/12/2012 100% SUBMITTAL

AECOM

AECOM TECHNICAL SERVICES, INC.
3101 WILSON BOULEVARD
SUITE 900
ARLINGTON, VA 22201

T: 703-682-4900 F: 703.682.4901
www.aecom.com

SEAL AREA

STATE OF MARYLAND
ROOD TASHMAJIAN
18113
PROFESSIONAL ENGINEER

KEY PLAN

REV	DATE	DESCRIPTION	S&R BR.	CUSTOMER	PM	SECT. HEAD

	INITIALS	DATE
DRAWN BY	MM	
CHECKED BY	DTM	
A-E MANAGER	EW	
ENVIRONMENTAL BRANCH	JH	
SAFETY BRANCH	CS	
CM	MMD	
PM	RWP	
CUSTOMER	JWB	
ENG. BRANCH	DGL	

SANITARY RISER DIAGRAM

P-702

FLIGHT PROJECTS BUILDING

NATIONAL AERONAUTICS AND SPACE ADMINISTRATION

GODDARD SPACE FLIGHT CENTER GREENBELT, MARYLAND
FACILITIES MANAGEMENT DIVISION

DATE ISSUED	CoF CODE OR WR#	AECOM PROJECT NO.	SCALE
07/12/2012	12GXAZ	60187636	NOT AT SCALE

FILE DATE: 10/10/2012 4:11:24 PM

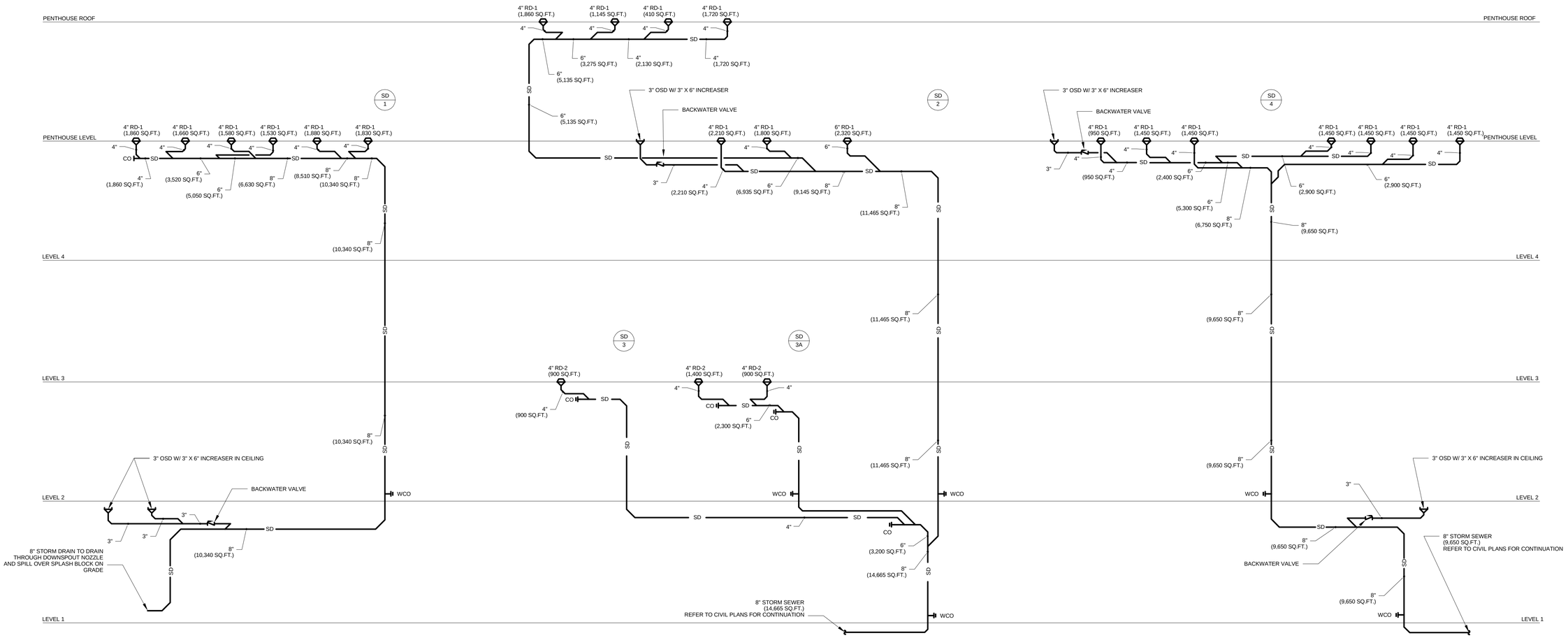

10/12/2012 100% SUBMITTAL

AECOM

AECOM TECHNICAL SERVICES, INC.
3101 WILSON BOULEVARD
SUITE 900
ARLINGTON, VA 22201

T: 703-682-4900 F: 703.682.4901
www.aecom.com

SEAL AREA

STATE OF MARYLAND
RODOLFO TABAMONTE
18113
PROFESSIONAL ENGINEER

KEY PLAN

REV	DATE	DESCRIPTION	S&R BR.	CUSTOMER	PM	SECT. HEAD

	INITIALS	DATE
DRAWN BY	MM	
CHECKED BY	DTM	
A-E MANAGER	EW	
ENVIRONMENTAL BRANCH	JH	
SAFETY BRANCH	CS	
CM	MMD	
PM	RWP	
CUSTOMER	JWB	
ENG. BRANCH	DGL	

STORM DRAIN RISER DIAGRAMS

P-703

FLIGHT PROJECTS BUILDING

NATIONAL AERONAUTICS AND SPACE ADMINISTRATION

GODDARD SPACE FLIGHT CENTER GREENBELT, MARYLAND
FACILITIES MANAGEMENT DIVISION

DATE ISSUED	CoF CODE OR WRF	AECOM PROJECT NO.	SCALE
07/12/2012	12GXAZ	60187636	NOT AT SCALE

FILE DATE: 10/10/2012 4:11:25 PM

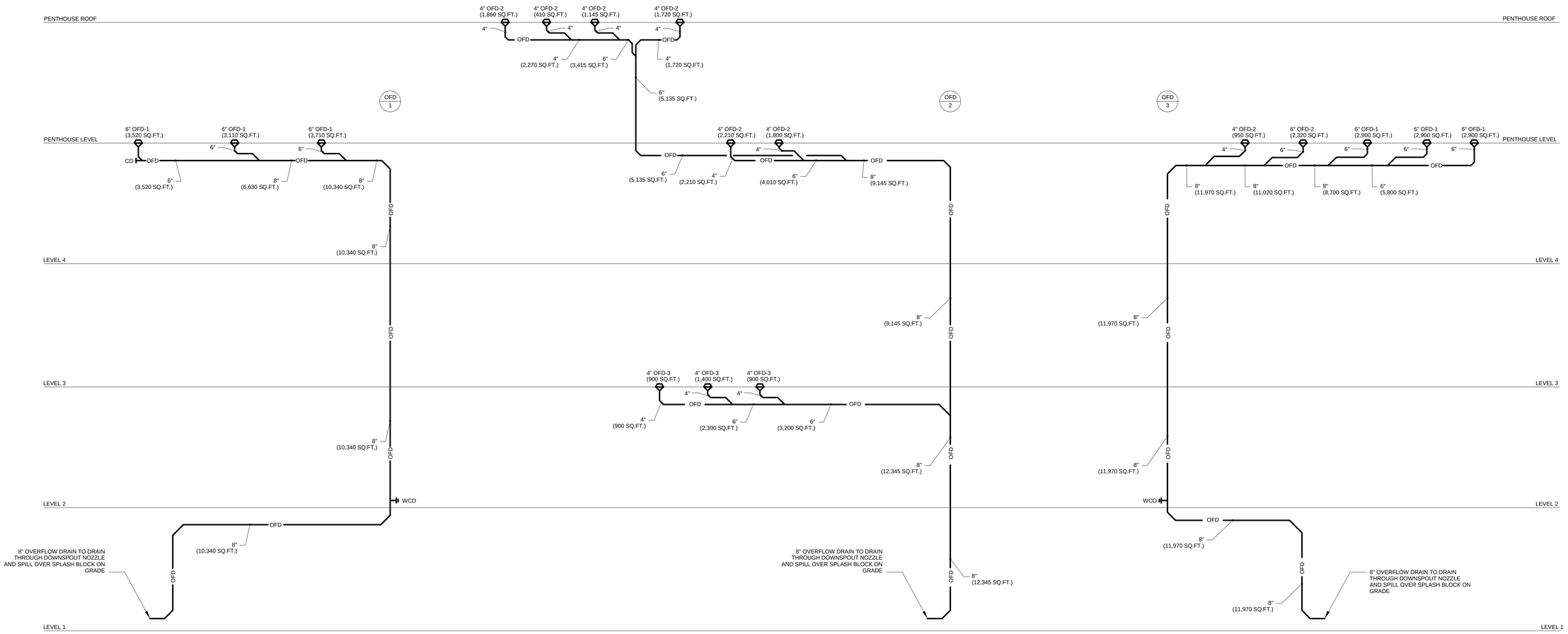

10/12/2012 100% SUBMITTAL

AECOM

AECOM TECHNICAL SERVICES, INC.
3101 WILSON BOULEVARD
SUITE 900
ARLINGTON, VA 22201

T: 703-682-4900 F: 703.682.4901
www.aecom.com

SEAL AREA

STATE OF MARYLAND
GOOD TASHAKOR
18113
PROFESSIONAL ENGINEER

KEY PLAN

REV	DATE	DESCRIPTION	S&R BR.	CUSTOMER	PM	SECT. HEAD

	INITIALS	DATE
DRAWN BY	MM	
CHECKED BY	DTM	
A-E MANAGER	EW	
ENVIRONMENTAL BRANCH	JH	
SAFETY BRANCH	CS	
CM	MMD	
PM	RWP	
CUSTOMER	JWB	
ENG. BRANCH	DGL	

OVERFLOW DRAIN RISER DIAGRAM

P-704

FLIGHT PROJECTS BUILDING

NATIONAL AERONAUTICS AND SPACE ADMINISTRATION

GODDARD SPACE FLIGHT CENTER GREENBELT, MARYLAND
FACILITIES MANAGEMENT DIVISION

DATE ISSUED	CoF CODE OR WR#	AECOM PROJECT NO.	SCALE
07/12/2012	12GXAZ	60187636	NOT AT SCALE

FILE DATE: 10/10/2012 4:11:27 PM

FIRE PROTECTION:

- OS&Y VALVE
- TS — TAMPER SWITCH
- WF — WATER FLOW SWITCH
- CHECK VALVE
- BUTTERFLY VALVE
- —F— ABOVE GROUND STANDPIPE / FIRE PROTECTION SUPPLY
- —SP— ABOVE GROUND SPRINKLER SUPPLY
- 2 1/2" HOSE CONNECTION
- FOUR-WAY FIRE DEPARTMENT CONNECTION
- RISER / STANDPIPE OR PIPE DROP
- FIRE TEST HEADER (4-WAY)
- HAZARD CLASSIFICATION BOUNDARY
- FCA — FLOOR CONTROL ASSEMBLY
- ITC — INSPECTOR'S TEST CONNECTION
- FHVC — FIRE HOSE VALVE CABINET
- PIPE TRANSITION
- ELBOW
- TEE
- END CAP
- PIPE UP

AAAA	AAAA - FIRE PROTECTION ZONE NUMBER & DESCRIPTION
BBBB	BBBB - HAZARD CLASSIFICATION
CCCC	CCCC - SPRINKLER DENSITY OVER MOST REMOTE AREA
DDDD	DDDD - HOSE ALLOWANCE
EEEE	EEEE - HYDRAULICALLY MOST REMOTE AREA, SQFT
FFFF	FFFF - MAXIMUM SPRINKLER SPACING, SQFT
GGGG	GGGG - SPRINKLER NOMINAL TEMPERATURE RATING, DEGREES F
HHHH	HHHH - SPRINKLER RESPONSE TYPE
IIII	IIII - SPRINKLER K FACTOR
JJJJ	JJJJ - SPRINKLER POSITION/FINISH

ABBREVIATIONS:

A.F.F.	ABOVE FINISHED FLOOR
F	FIRE PROTECTION SUPPLY
FCA	FLOOR CONTROL ASSEMBLY
F.D.C.	FIRE DEPARTMENT CONNECTION
N.C.	NORMALLY CLOSED
N.O.	NORMALLY OPEN
O.S. &Y.OPEN	SCREW AND YOKE
PRE	PRE-ACTION
SD	SMOKE DAMPER
SP	SPRINKLER SUPPLY
TS	TAMPER SWITCH
TBD	TO BE DETERMINED
U.O.N	UNLESS OTHERWISE NOTED
WF	WATER FLOW

FIRE PROTECTION CODE ANALYSIS

APPLICABLE CODES AND STANDARDS

STANDARD REFERENCE DOCUMENT FOR FACILITIES, JULY, 2010
INTERNATIONAL BUILDING CODE (IBC), 2009
NASA STD 8719.11A, SAFETY STANDARD FOR FIRE PROTECTION, NOVEMBER, 2008
NFPA 1, NATIONAL FIRE CODE, 2009
NFPA 10, STANDARD FOR PORTABLE FIRE EXTINGUISHERS, 2010
NFPA 13, INSTALLATION OF SPRINKLER SYSTEMS, 2010
NFPA 14, STANDARD FOR THE INSTALLATION OF STANDPIPE, PRIVATE HYDRANTS AND HOSE SYSTEMS, 2010
NFPA 20, STANDARD FOR THE INSTALLATION OF STATIONARY FIRE PUMPS FOR FIRE PROTECTION, 2010
NFPA 24, INSTALLATION OF PRIVATE FIRE SERVICE MAINS AND THEIR APPURTENANCES, 2010
NFPA 291, RECOMMENDED PRACTICE FOR FIRE FLOW TESTING AND MARKING OF HYDRANTS, 2010
NFPA 1901, AUTOMATIC FIRE APPARATUS, 2009

PLANNED SPRINKLER AND STANDPIPE SYSTEMS

A MANUAL CLASS 1 STANDPIPE SYSTEM IS TO BE PROVIDED AS PERMITTED BY NFPA 14
FOR A NON-HIGH RISE BUILDING (SECTION 5.4.1.1).
HOSE CONNECTIONS WILL BE LOCATED WITHIN ENCLOSED EXIT STAIRS, AND ON FLOORS
AS NECESSARY TO COMPLY WITH NFPA 14 TRAVEL DISTANCE REQUIREMENTS TO HOSE VALVES.
A FIRE DEPARTMENT CONNECTION WILL BE PROVIDED IN A FIRE DEPARTMENT APPROVED
LOCATION TO SUPPLY THE STANDPIPE SYSTEM.
THE STANDPIPE SYSTEM WILL BE DESIGNED TO PROVIDE 100 PSI AT THE TOP HOSE
CONNECTIONS, SUPPLIED BY THE FIRE DEPARTMENT PUMPER TRUCK THROUGH 4 WAY FIRE
DEPARTMENT CONNECTIONS (SECTION 7.8.1).
STANDPIPE SYSTEM WILL ALSO SUPPLY SPRINKLER PROTECTION FOR ALL FLOORS IN A
COMBINED SYSTEM, WITH FLOOR CONTROL ASSEMBLIES FOR SPRINKLER FEEDS LOCATED
WITHIN STAIR ENCLOSURES ON EACH LEVEL.
SPRINKLER PROTECTION WILL BE DESIGNED BASED ON ORDINARY HAZARD REQUIREMENTS AS
SHOWN ON THE PLANS.
NO DEVIATIONS FROM A FULLY SPRINKLERED BUILDING ARE ANTICIPATED.
A POST INDICATING VALVE IS TO BE PROVIDED FOR THE INCOMING FIRE WATER SERVICE LINE,
AND A BACKFLOW PREVENTER IS PLANNED.
A TEST HEADER FOR FORWARD FLOW TESTING OF THE BACKFLOW PREVENTER WILL BE LOCATED ON THE EAST
SIDE OF THE BUILDING, NEAR THE INCOMING FIRE WATER SERVICE.
MAIN ELECTRICAL ROOM HAS TWO DRY-TYPE TRANSFORMERS EACH RATED AT 1500 KVA.
ADEQUATE FIRE PROTECTION IS PROVIDED BY THE PLANNED WET PIPE SPRINKLER SYSTEM
FOR THIS SPACE.

WATER SUPPLY TO BE PROVIDED:

PRIOR TO STARTING HYDRAULIC CALCULATIONS OR SPRINKLER SHOP DRAWINGS, THE CONTRACTOR SHALL OBTAIN, AT HIS OWN COST, A FIRE FLOW TEST AND WATER SUPPLY ANALYSIS, CONDUCTED BY QUALIFIED PERSONS IN ACCORDANCE WITH NFPA 291, TO BE USED IN THE DESIGN OF THE SPRINKLER SYSTEMS. THE TEST REPORT AND ANALYSIS SHALL BE SUBMITTED TO THE FIRE PROTECTION ENGINEER OF RECORD AND THE NASA GODDARD FIRE PROTECTION ENGINEER FOR REVIEW AND ACCEPTANCE.

WATER SUPPLY TO BE USED FOR BIDDING PURPOSES:
STATIC: 70 PSI
RESIDUAL: 68 PSI
FLOWING: 2334 GPM
EFFECTIVE AT HYDRANT 126 ALONG EXPLORER ROAD. SOURCE LOCATION IS SHOWN ON DRAWINGS ATTACHED TO HYDRAULIC CALCULATIONS

GENERAL NOTES:

1. IT IS THE CONTRACTOR'S RESPONSIBILITY TO COORDINATE FIRE PROTECTION INSTALLATION AND DRAWINGS WITH MECHANICAL AND ELECTRICAL INSTALLATION AND DRAWINGS.

2. THE FIRE PROTECTION DRAWINGS ARE FOR FIRE PROTECTION EQUIPMENT AND SYSTEMS, AND SHALL NOT BE USED TO SCALE DIMENSIONS.

3. ALL NOTES ON DRAWINGS WITHOUT ⬡ ARE GENERAL NOTES.

4. NUMBERS SHOWN IN BOXES ▭ ARE ROOM NUMBERS.

5. FOR FIRE RATED ASSEMBLIES, SEE LIFE SAFETY DRAWINGS.

6. KEY NOTES MARKED BY SYMBOL ⬡ ARE DEFINED SEPARATELY ON EACH DRAWING.

FIRE SPRINKLER SYSTEM NOTES:

1. PROVIDE A COMPLETE COMBINATION WET-PIPE, CLASS 1 MANUAL WET STANDPIPE SYSTEM.

2. PROVIDE SPRINKLER COVERAGE BELOW ALL DUCTWORK OR OTHER OBSTRUCTIONS 48" WIDE OR GREATER, WHERE LOCATED BELOW FINISHED CEILING OR IN UNFINISHED SPACES.

3. PROVIDE SPRINKLER GUARDS FOR SPRINKLERS WITHIN 7 FT. OF THE FLOOR.

4. PROVIDE DESIGN AND INSTALLATION OF THE FIRE SUPPRESSION SYSTEM TO PROVIDE A FULLY SPRINKLERED BUILDING.

5. SPRINKLERS ARE TO BE INSTALLED IN "CENTER OF TILES" COORDINATED WITH DIFFUSERS AND LIGHT FIXTURES, AND ALL FIXTURES IN GYPSUM BOARD CEILINGS.

6. ALL SPRINKLER CONTROL WATER SUPPLY AND STANDPIPE CONTROL VALVES TO BE PROVIDED WITH TAMPER ALARMS.

7. THIS BUILDING HAS BEEN ASSIGNED A SEISMIC CATEGORY OF "B." NO SPECIAL SEISMIC DESIGN FOR SPRINKLER SYSTEMS IS REQUIRED.

8. ALL FIRE PROTECTION PIPING AND MAINS SHALL BE RUN ABOVE SUSPENDED CEILINGS, EXCEPT IN ROOMS WITHOUT SUSPENDED CEILINGS.

9. CONTRACTOR SHALL COORDINATE THE EXACT REQUIREMENTS AND LOCATION OF HIS WORK WITH THE WORK OF VARIOUS TRADES PRIOR TO FABRICATION. THE CONTRACTOR SHALL COORDINATE EXACT ROUTING OF SPRINKLERS SO THAT NO CONFLICTS OCCUR WITH LIGHTS, DIFFUSERS, BEAMS, CEILING BULKHEADS, ETC.

10. ALL PENETRATIONS THROUGH FIRE-RATED ASSEMBLIES SHALL BE SEALED WITH LISTED FIRESTOP ASSEMBLIES, AND FINISHED FLUSH AND NEAT WITH ADJACENT SURFACES. ALL PENETRATIONS OF FLOOR ASSEMBLIES THAT ARE NOT LOCATED WITHIN A FIRE RATED SHAFT SHALL BE FIRE-STOPPED WITH A LISTED FIRESTOP SYSTEM RATED FOR 2 HOURS.

11. ALL FIRE PROTECTION PIPING SHALL BE SUPPORTED INDEPENDENTLY BY THE BUILDING STRUCTURAL MEMBERS.

12. PROVIDE PRESSURE GAUGES AT TOPS OF OF STANDPIPES AND AT SPRINKLER FEEDS.

13. SPRINKLER/STANDPIPE PIPING ARRANGEMENTS ON THESE DRAWINGS ARE INTENDED TO PROVIDE GENERAL GUIDANCE FOR SYSTEM ARRANGEMENT AND LAYOUT. CONTRACTOR IS RESPONSIBLE FOR ALL FINAL DESIGN OF SYSTEM PER THE REQUIREMENTS OF THE SPECIFICATIONS.

14. THE SPRINKLER SYSTEMS SHALL BE HYDRAULICALLY CALCULATED USING THE HYDRAULICALLY MOST REMOTE AREA, USING THE DESIGN DENSITY METHOD (NOT THE ROOM DESIGN METHOD) OF NFPA 13. HYDRAULIC DEMAND PRESSURES SHALL BE 10 PSI LESS THAN THE SUPPLY CURVE.

15. THE STANDPIPE SYSTEM SHALL BE HYDRAULICALLY CALCULATED PER NFPA 14 REQUIREMENTS BASED ON THE AVAILABLE PUBLIC SUPPLY AND BASED ON THE USE OF A FIRE DEPARTMENT PUMPER APPARATUS AS OUTLINED IN NFPA 1901.

16. PROVIDE PERMANENT SIGN READING "STANDPIPE AND AUTOMATIC SPRINKLER SYSTEM" AT THE BASE OF EACH STANDPIPE.

17. PROVIDE COORDINATION DRAWING TO DESIGN ARCHITECT PRIOR TO FABRICATION.

18. IN FINISHED CEILING AREAS, PROVIDE SPRINKLER HEAD COVERS TO MATCH CEILING COLOR. REFER TO INTERIOR FINISH SCHEDULE.

19. SPRINKLER HYDRAULIC DEMAND AREAS SHOWN ON THE PLANS ARE BASED ON QUICK-RESPONSE SPRINKLER SYSTEM AREA REDUCTION FACTORS PER NFPA 13.

20. PROVIDE INSPECTOR'S TEST CONNECTION IN JANITOR'S CLOSET ON FLOORS 1-4 DRAINING TO A FUNNEL RECEPTOR ON 1ST FLOOR, AND A REMOTE TEST CONNECTION FOR THE PENTHOUSE OUT TO THE ROOF WITH A SPLASH BLOCK. ITCS ON FLOORS 1-4 CONNECT THROUGH THE FLOOR TO THE DRAIN ON THE 1ST FLOOR. SEE PLUMBING DRAWINGS FOR ADDITIONAL DETAIL.

100% SUBMITTAL

AECOM

AECOM TECHNICAL SERVICES, INC.
3101 WILSON BOULEVARD
SUITE 900
ARLINGTON, VA 22201

T: 703-682-4900 F: 703.682.4901
www.aecom.com

SEAL AREA

STATE OF MARYLAND
10-12-12

KEY PLAN

REV	DATE	DESCRIPTION	S&R BR.	CUSTOMER	PM	SECT. HEAD

	INITIALS	DATE
DRAWN BY	TGL	
CHECKED BY	FM	
A-E MANAGER	EW	
ENVIRONMENTAL BRANCH	JH	
SAFETY BRANCH	CS	
CM	MMD	
PM	RWP	
CUSTOMER	JWB	
ENG. BRANCH	DGL	

FIRE PROTECTION
LEGEND, ABBREVIATIONS,
& SYMBOLS

FP-001

FLIGHT PROJECTS BUILDING

NATIONAL AERONAUTICS AND SPACE ADMINISTRATION
GODDARD SPACE FLIGHT CENTER GREENBELT, MARYLAND
FACILITIES MANAGEMENT DIVISION

DATE ISSUED	CoF CODE OR WR#	AECOM PROJECT NO.	SCALE
10/12/2012	12GXAZ	60187636	1/4" = 1'-0"

FILE DATE: 10/8/2012 3:36:44 PM

KEYED NOTES:

1. PROVIDE SPLASH BLOCK FOR DRAIN RISER DISCHARGE AT THIS LOCATION.

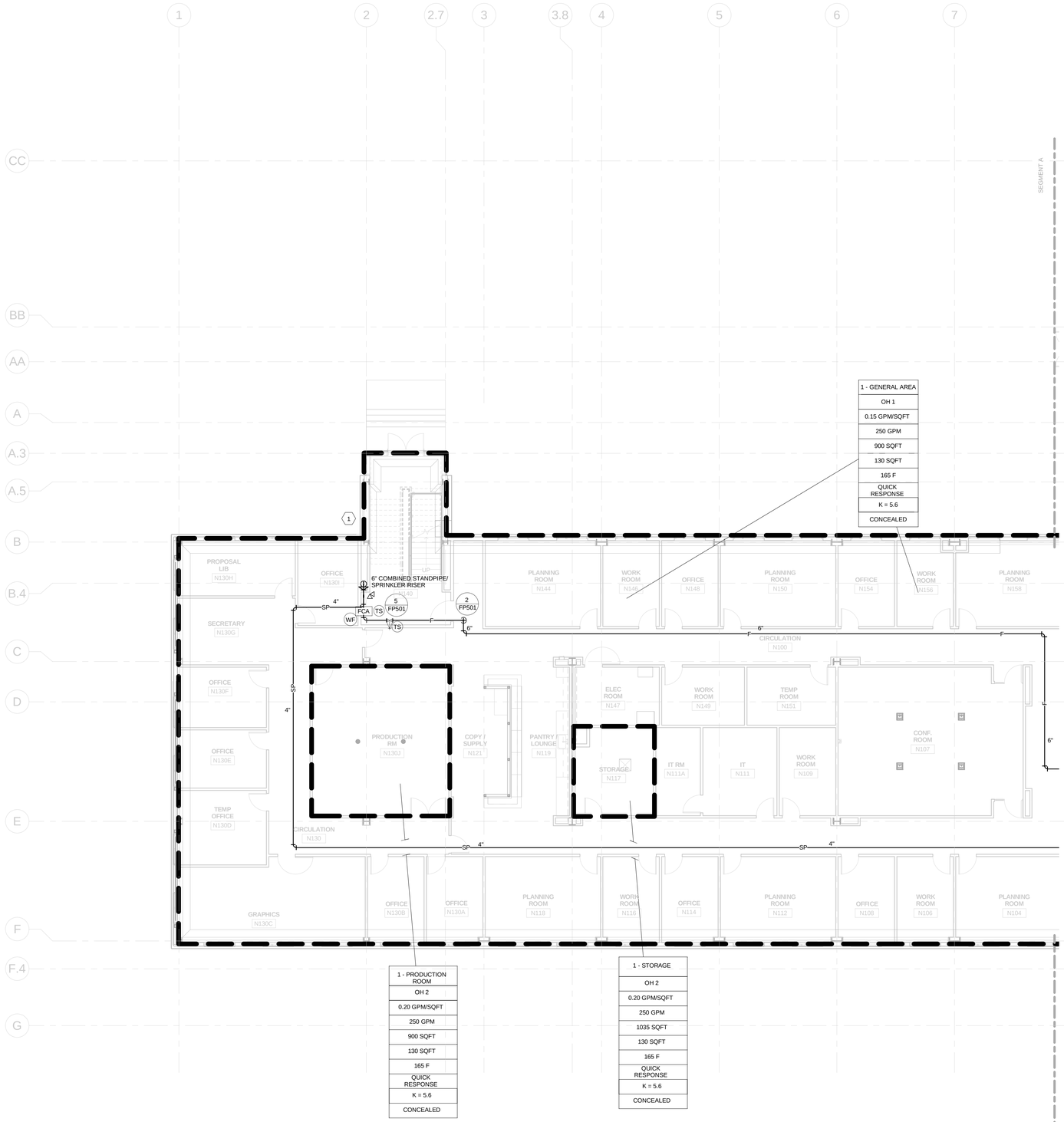

100% SUBMITTAL

NORTH

1/8"=1'-0" 8' 4' 0 8' 16'

AECOM

AECOM TECHNICAL SERVICES, INC.
3101 WILSON BOULEVARD
SUITE 900
ARLINGTON, VA 22201

T: 703-682-4900 F: 703.682.4901
www.aecom.com

SEAL AREA

STATE OF MARYLAND
10-12-12

KEY PLAN

SEGMENT - A

REV	DATE	DESCRIPTION	S&R BR.	CUSTOMER	PM	SECT. HEAD

	INITIALS	DATE
DRAWN BY	TGL	
CHECKED BY	FM	
A-E MANAGER	EW	
ENVIRONMENTAL BRANCH	JH	
SAFETY BRANCH	CS	
CM	MMD	
PM	RWP	
CUSTOMER	JWB	
ENG. BRANCH	DGL	

LEVEL-1 FIRE PROTECTION PLAN SEGMENT A

FP-101a

FLIGHT PROJECTS BUILDING

NATIONAL AERONAUTICS AND SPACE ADMINISTRATION

GODDARD SPACE FLIGHT CENTER GREENBELT, MARYLAND
FACILITIES MANAGEMENT DIVISION

DATE ISSUED	CoF CODE OR WR#	AECOM PROJECT NO.	SCALE
10/12/2012	12GXAZ	60187636	1/8" = 1'-0"

FILE DATE: 10/8/2012 3:36:49 PM

KEYED NOTES:

1. PROVIDE SPLASH BLOCK FOR DRAIN RISER DISCHARGE AT THIS LOCATION.
2. FDC SHALL BE WITHIN 100 FT OF A FIRE HYDRANT. SEE NASA STD 8719.11A FIRE DEPARTMENT CONNECTION (FDC).
3. 4-WAY CHROME LINEAR FIRE TEST HEADER WITH OUTLETS AT LEAST 6" APART, FOR FORWARD FLOW TESTING OF BACKFLOW PREVENTER.

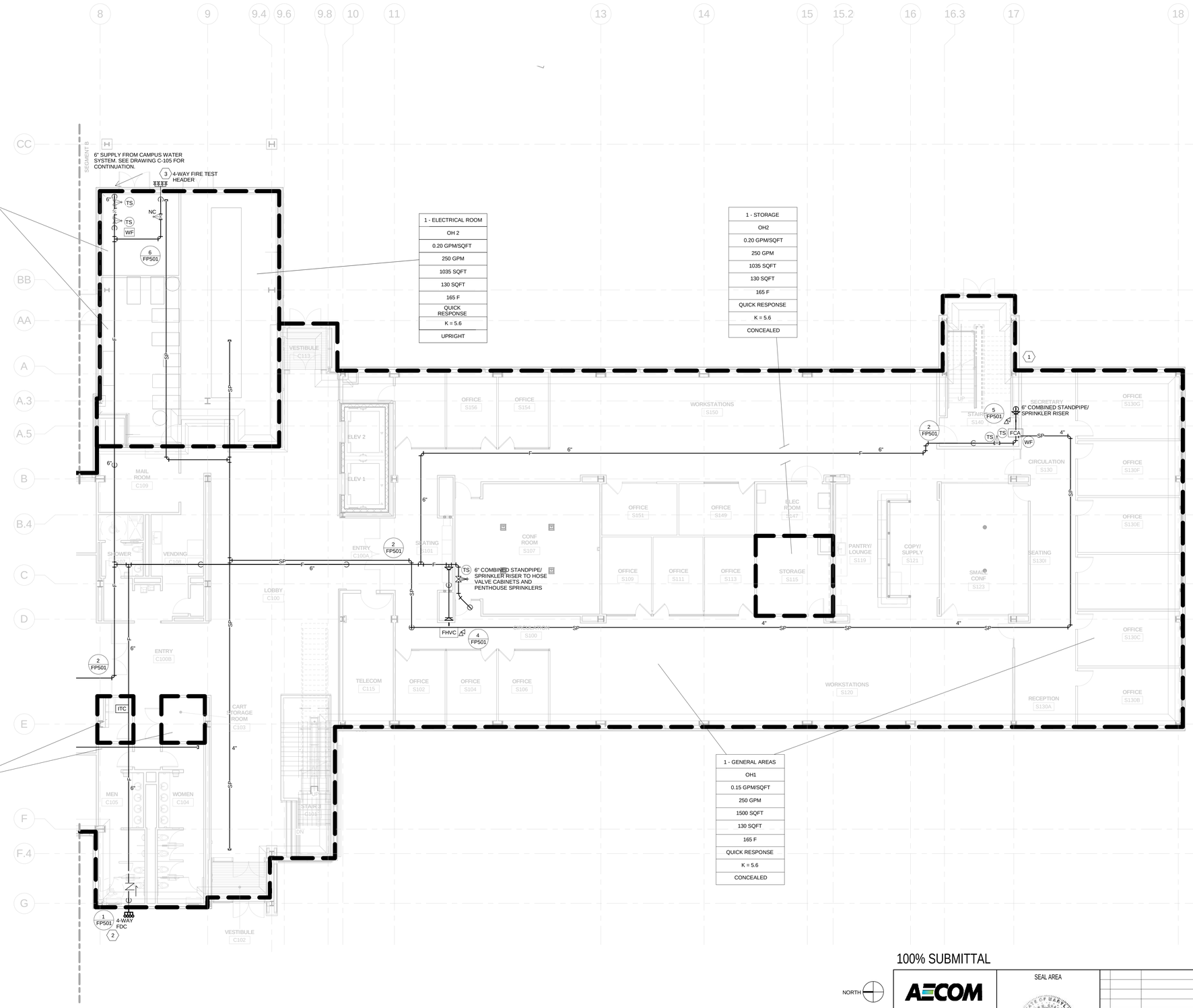

100% SUBMITTAL

AECOM

AECOM TECHNICAL SERVICES, INC.
3101 WILSON BOULEVARD
SUITE 900
ARLINGTON, VA 22201

T: 703-682-4900 F: 703.682.4901
www.aecom.com

SEAL AREA

KEY PLAN

SEGMENT - B

REV	DATE	DESCRIPTION	S&R BR.	CUSTOMER	PM	SECT. HEAD

	INITIALS	DATE
DRAWN BY	TGL	
CHECKED BY	FM	
A-E MANAGER	EW	
ENVIRONMENTAL BRANCH	JH	
SAFETY BRANCH	CS	
CM	MMD	
PM	RWP	
CUSTOMER	JWB	
ENG. BRANCH	DGL	

LEVEL-1 FIRE PROTECTION PLAN SEGMENT B

FP-101b

FLIGHT PROJECTS BUILDING

NATIONAL AERONAUTICS AND SPACE ADMINISTRATION

GODDARD SPACE FLIGHT CENTER GREENBELT, MARYLAND
FACILITIES MANAGEMENT DIVISION

DATE ISSUED	CoF CODE OR WR#	AECOM PROJECT NO.	SCALE
10/12/2012	12GXAZ	60187636	1/8" = 1'-0"

FILE DATE: 10/8/2012 3:36:57 PM

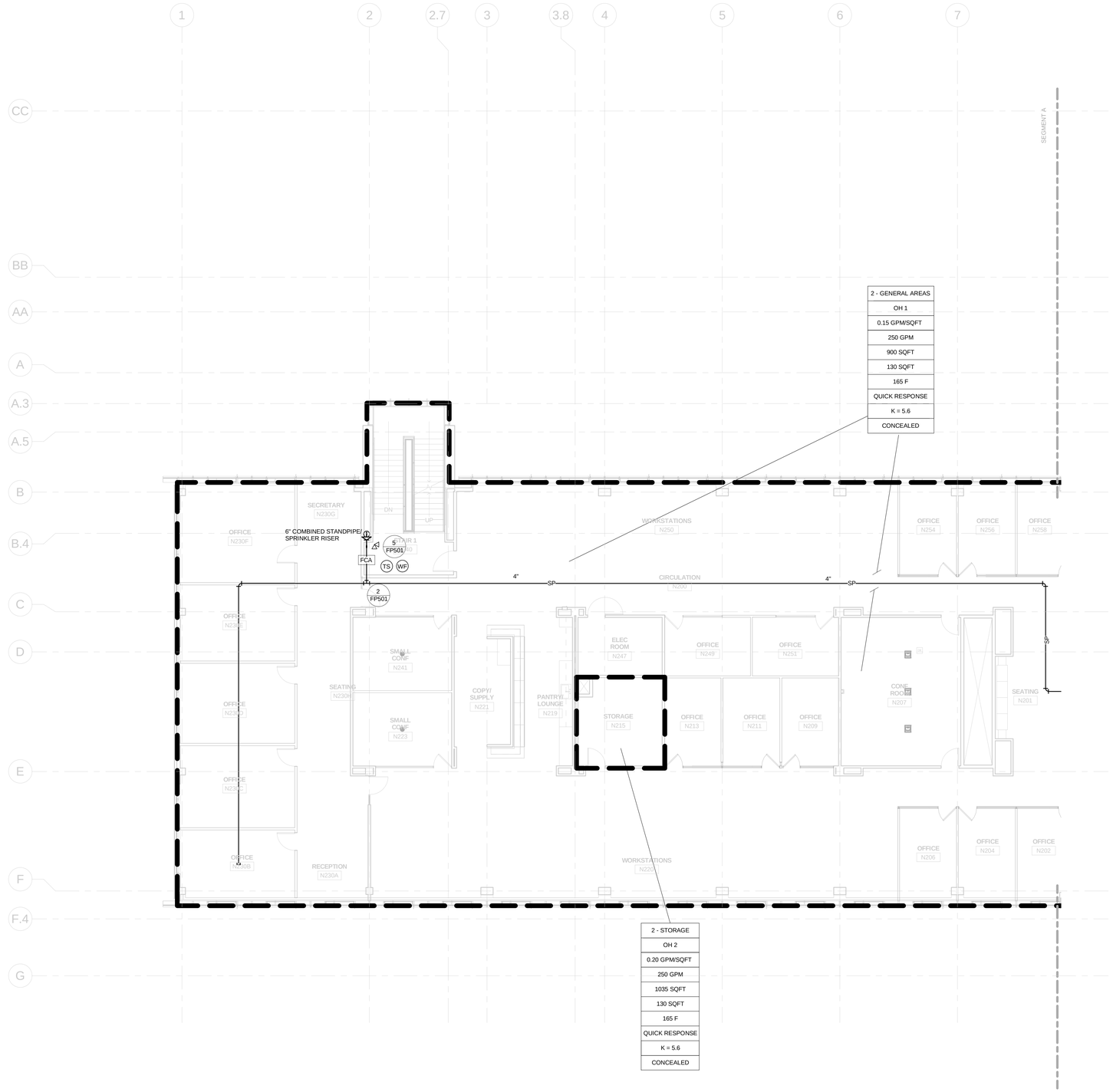

100% SUBMITTAL

NORTH

1/8"=1'-0" 8' 4' 0 8' 16'

AECOM

AECOM TECHNICAL SERVICES, INC.
3101 WILSON BOULEVARD
SUITE 900
ARLINGTON, VA 22201

T: 703-682-4900 F: 703.682.4901
www.aecom.com

SEAL AREA

STATE OF MARYLAND
JOSEPH RAMPONI
PROFESSIONAL ENGINEER
10-12-12

KEY PLAN

SEGMENT - A

REV	DATE	DESCRIPTION	S&R BR.	CUSTOMER	PM	SECT. HEAD

	INITIALS	DATE
DRAWN BY	TGL	
CHECKED BY	FM	
A-E MANAGER	EW	
ENVIRONMENTAL BRANCH	JH	
SAFETY BRANCH	CS	
CM	MMD	
PM	RWP	
CUSTOMER	JWB	
ENG. BRANCH	DGL	

LEVEL-2 FIRE PROTECTION PLAN SEGMENT A

FP-102a

FLIGHT PROJECTS BUILDING

NATIONAL AERONAUTICS AND SPACE ADMINISTRATION

GODDARD SPACE FLIGHT CENTER GREENBELT, MARYLAND
FACILITIES MANAGEMENT DIVISION

DATE ISSUED	CoF CODE OR WR#	AECOM PROJECT NO.	SCALE
10/12/2012	12GXAZ	60187636	1/8" = 1'-0"

FILE DATE: 10/8/2012 3:37:03 PM

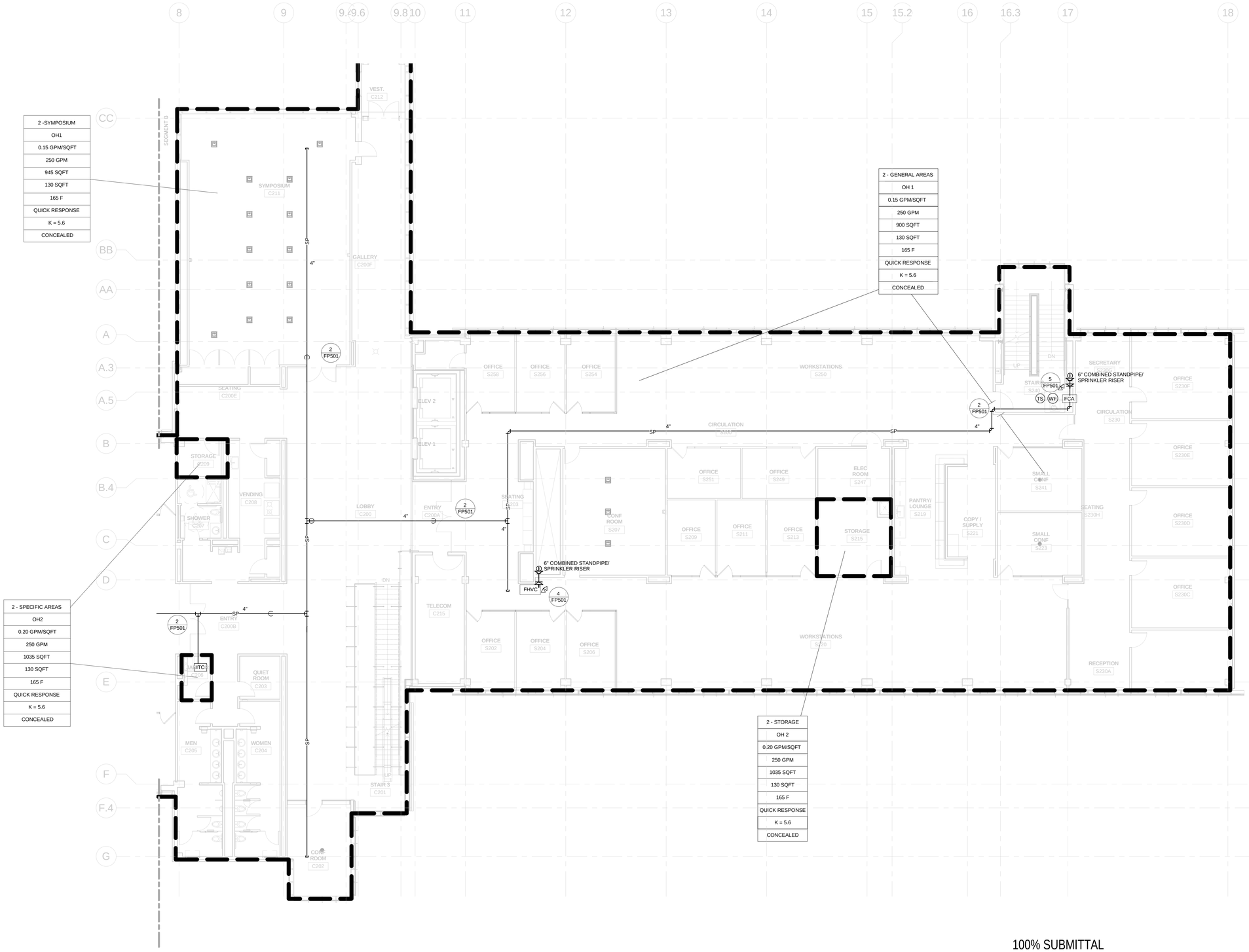

100% SUBMITTAL

NORTH

1/8"=1'-0" 8' 4' 0 8' 16'

AECOM

AECOM TECHNICAL SERVICES, INC.
3101 WILSON BOULEVARD
SUITE 900
ARLINGTON, VA 22201

T: 703-682-4900 F: 703.682.4901
www.aecom.com

SEAL AREA

STATE OF MARYLAND
JOSEPH LAGANA
No. 36001
PROFESSIONAL ENGINEER
10-12-12

KEY PLAN

SEGMENT - B

REV	DATE	DESCRIPTION	S&R BR.	CUSTOMER	PM	SECT. HEAD

	INITIALS	DATE
DRAWN BY	TGL	
CHECKED BY	FM	
A-E MANAGER	EW	
ENVIRONMENTAL BRANCH	JH	
SAFETY BRANCH	CS	
CM	MMD	
PM	RWP	
CUSTOMER	JWB	
ENG. BRANCH	DGL	

LEVEL-2 FIRE PROTECTION PLAN SEGMENT B

FP-102b

FLIGHT PROJECTS BUILDING

NATIONAL AERONAUTICS AND SPACE ADMINISTRATION
GODDARD SPACE FLIGHT CENTER GREENBELT, MARYLAND
FACILITIES MANAGEMENT DIVISION

DATE ISSUED	CoF CODE OR WR#	AECOM PROJECT NO.	SCALE
10/12/2012	12GXAZ	60187636	1/8" = 1'-0"

FILE DATE: 10/8/2012 3:37:13 PM

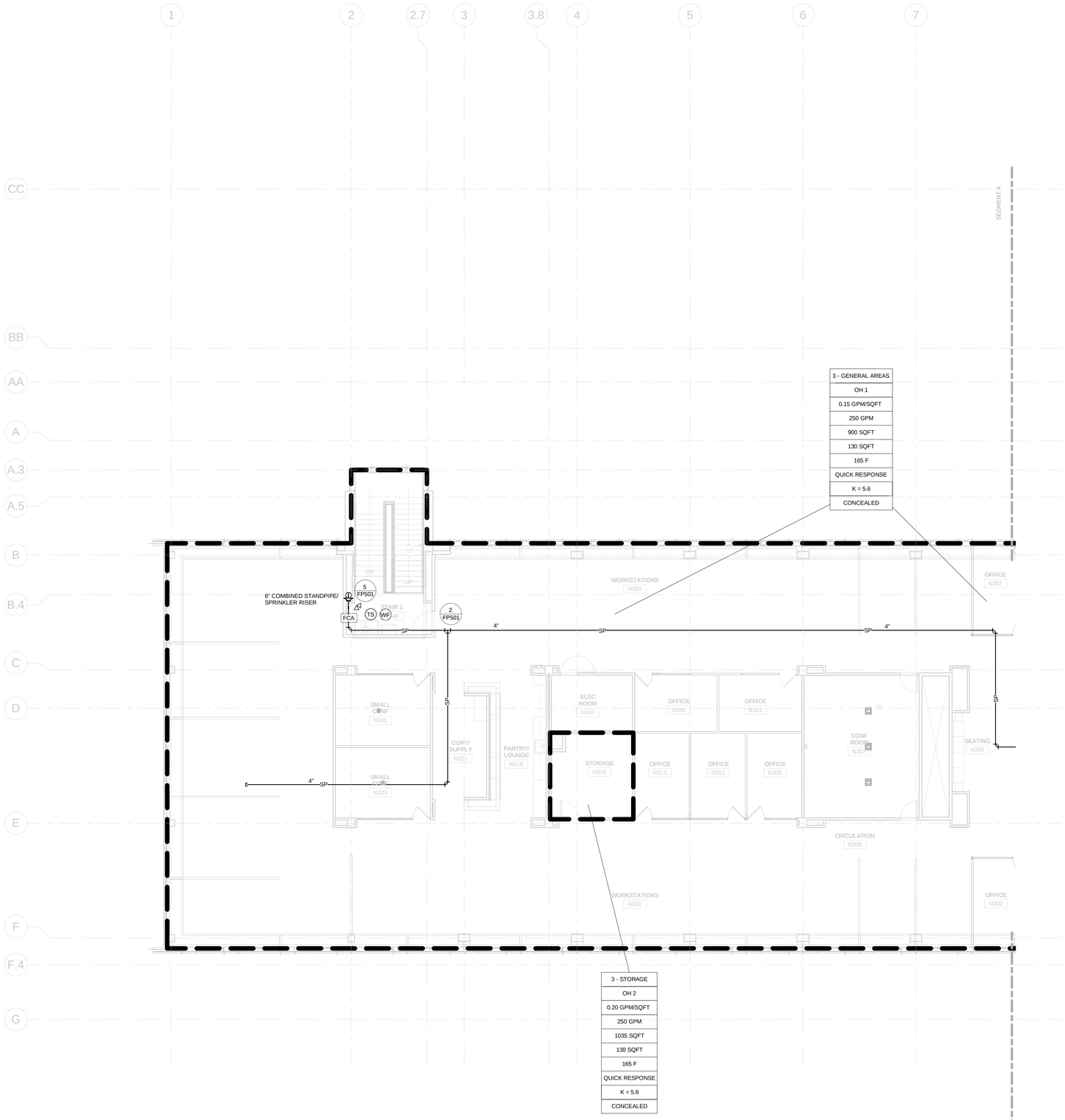

100% SUBMITTAL

NORTH

1/8"=1'-0" 8' 4' 0 8' 16'

AECOM

AECOM TECHNICAL SERVICES, INC.
3101 WILSON BOULEVARD
SUITE 900
ARLINGTON, VA 22201

T: 703-682-4900 F: 703.682.4901
www.aecom.com

SEAL AREA

STATE OF MARYLAND
REGISTERED PROFESSIONAL ENGINEER
JOSEPH FRANGOPULOS
No. 15-12-85
LICENSED

KEY PLAN

SEGMENT - A

REV	DATE	DESCRIPTION	S&R BR.	CUSTOMER	PM	SECT. HEAD

	INITIALS	DATE
DRAWN BY	TGL	
CHECKED BY	FM	
A-E MANAGER	EW	
ENVIRONMENTAL BRANCH	JH	
SAFETY BRANCH	CS	
CM	MMD	
PM	RWP	
CUSTOMER	JWB	
ENG. BRANCH	DGL	

LEVEL-3 FIRE PROTECTION PLAN SEGMENT A

FP-103a

FLIGHT PROJECTS BUILDING

NATIONAL AERONAUTICS AND SPACE ADMINISTRATION

GODDARD SPACE FLIGHT CENTER GREENBELT, MARYLAND
FACILITIES MANAGEMENT DIVISION

DATE ISSUED	CoF CODE OR WR#	AECOM PROJECT NO.	SCALE
10/12/2012	12GXAZ	60187636	1/8" = 1'-0"

FILE DATE: 10/8/2012 3:37:21 PM

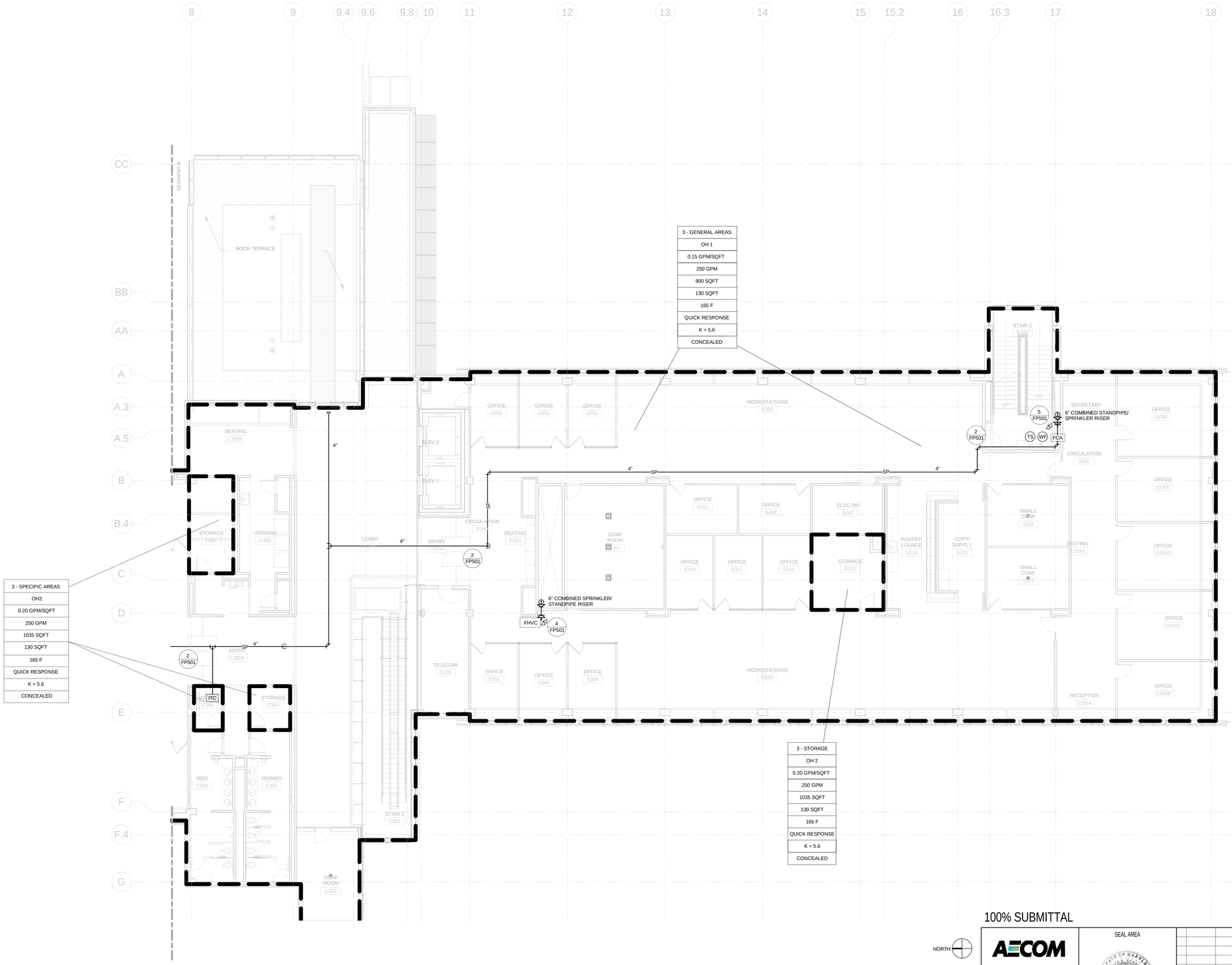

100% SUBMITTAL

AECOM

AECOM TECHNICAL SERVICES, INC.
3101 WILSON BOULEVARD
SUITE 900
ARLINGTON, VA 22201

T: 703-682-4900 F: 703.682.4901
www.aecom.com

SEAL AREA

KEY PLAN

SEGMENT - B

REV	DATE	DESCRIPTION	S&R BR.	CUSTOMER	PM	SECT. HEAD

	INITIALS	DATE
DRAWN BY	TGL	
CHECKED BY	FM	
A-E MANAGER	EW	
ENVIRONMENTAL BRANCH	JH	
SAFETY BRANCH	CS	
CM	MMD	
PM	RWP	
CUSTOMER	JWB	
ENG. BRANCH	DGL	

LEVEL-3 FIRE PROTECTION PLAN SEGMENT B

FP-103b

FLIGHT PROJECTS BUILDING

NATIONAL AERONAUTICS AND SPACE ADMINISTRATION

GODDARD SPACE FLIGHT CENTER GREENBELT, MARYLAND
FACILITIES MANAGEMENT DIVISION

DATE ISSUED	CoF CODE OR WR#	AECOM PROJECT NO.	SCALE
10/12/2012	12GXAZ	60187636	1/8" = 1'-0"

FILE DATE: 10/8/2012 3:37:30 PM

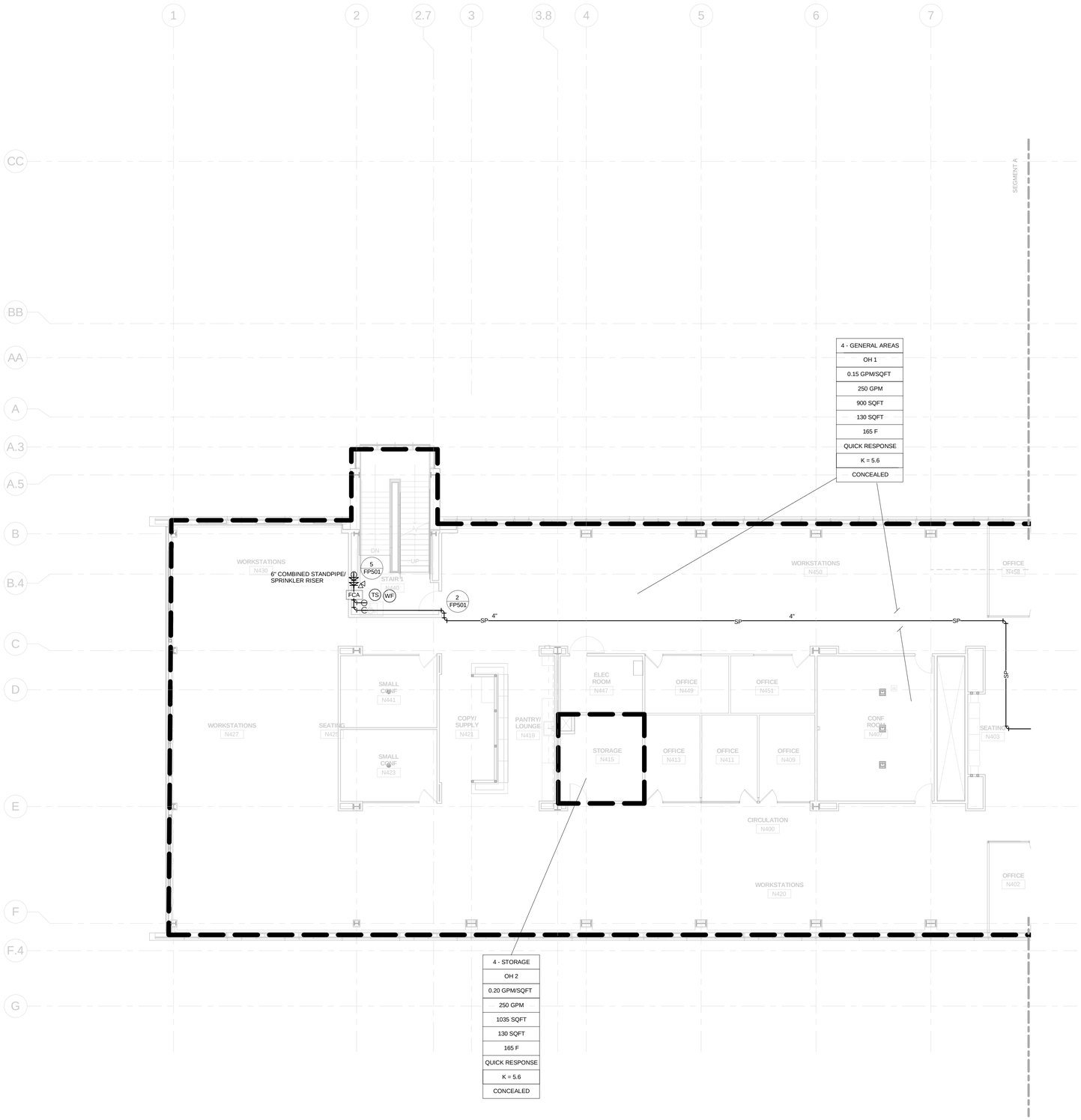

100% SUBMITTAL

NORTH

1/8"=1'-0" 8' 4' 0 8' 16'

AECOM

AECOM TECHNICAL SERVICES, INC.
3101 WILSON BOULEVARD
SUITE 900
ARLINGTON, VA 22201

T: 703-682-4900 F: 703.682.4901
www.aecom.com

SEAL AREA

STATE OF MARYLAND
JOSEPH T. FERGUSON
No. 15250
PROFESSIONAL ENGINEER
10-12-12

KEY PLAN

SEGMENT - A

REV	DATE	DESCRIPTION	S&R BR.	CUSTOMER	PM	SECT. HEAD

	INITIALS	DATE
DRAWN BY	TGL	
CHECKED BY	FM	
A-E MANAGER	EW	
ENVIRONMENTAL BRANCH	JH	
SAFETY BRANCH	CS	
CM	MMD	
PM	RWP	
CUSTOMER	JWB	
ENG. BRANCH	DGL	

LEVEL-4 FIRE PROTECTION PLAN SEGMENT A

FP-104a

FLIGHT PROJECTS BUILDING

NATIONAL AERONAUTICS AND SPACE ADMINISTRATION

GODDARD SPACE FLIGHT CENTER GREENBELT, MARYLAND
FACILITIES MANAGEMENT DIVISION

DATE ISSUED	CoF CODE OR WR#	AECOM PROJECT NO.	SCALE
10/12/2012	12GXAZ	60187636	1/8" = 1'-0"

FILE DATE: 10/8/2012 3:37:37 PM

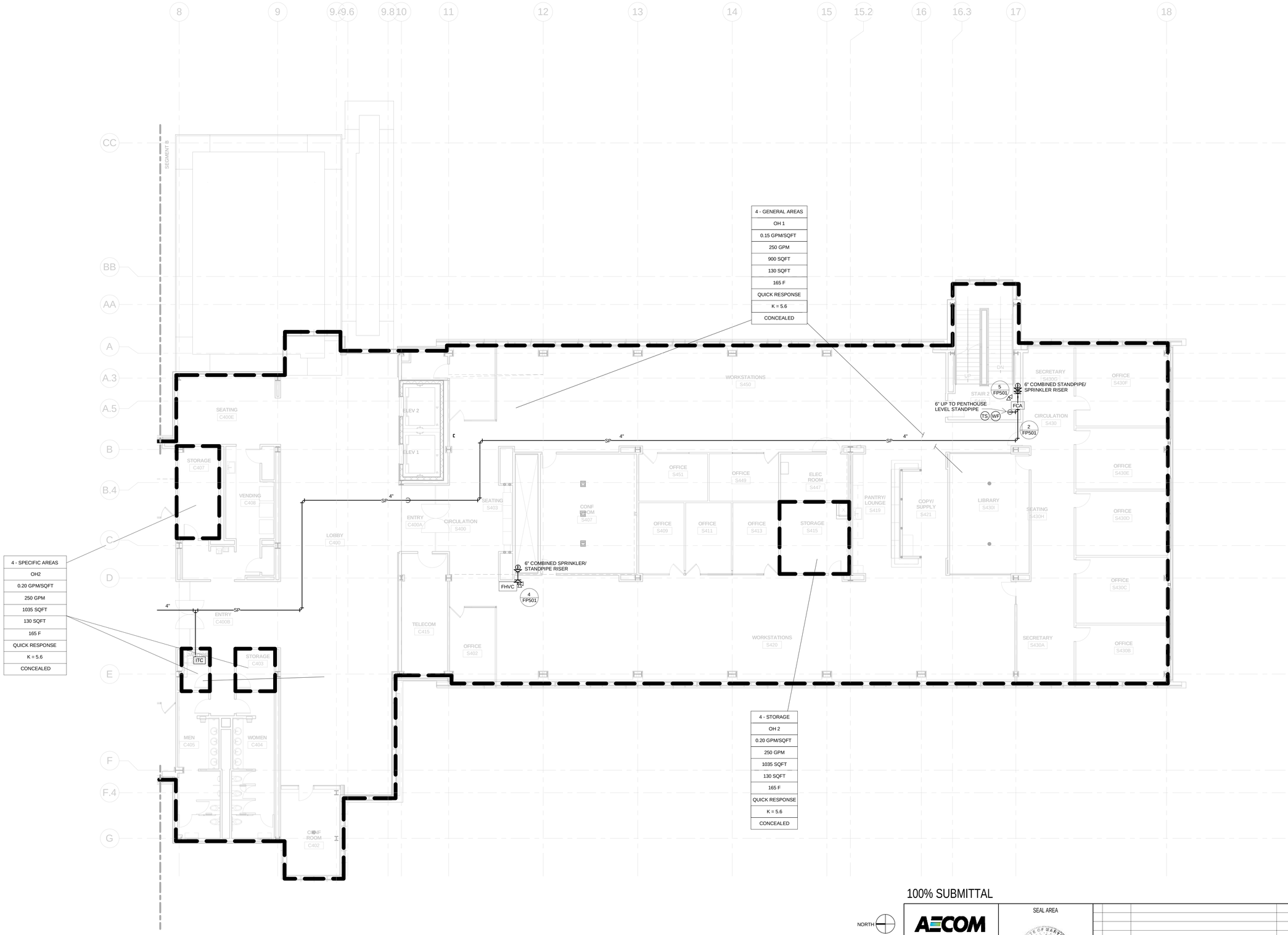

100% SUBMITTAL

NORTH

1/8"=1'-0" 8' 4' 0 8' 16'

AECOM

AECOM TECHNICAL SERVICES, INC.
3101 WILSON BOULEVARD
SUITE 900
ARLINGTON, VA 22201

T: 703-682-4900 F: 703.682.4901
www.aecom.com

SEAL AREA

STATE OF MARYLAND
JOSEPH L. MASSARONI
No. 12-12-12
PROFESSIONAL ENGINEER

KEY PLAN

SEGMENT - B

REV	DATE	DESCRIPTION	S&R BR.	CUSTOMER	PM	SECT. HEAD

	INITIALS	DATE
DRAWN BY	TGL	
CHECKED BY	FM	
A-E MANAGER	EW	
ENVIRONMENTAL BRANCH	JH	
SAFETY BRANCH	CS	
CM	MMD	
PM	RWP	
CUSTOMER	JWB	
ENG. BRANCH	DGL	

LEVEL-4 FIRE PROTECTION PLAN SEGMENT B

FP-104b

FLIGHT PROJECTS BUILDING

NATIONAL AERONAUTICS AND SPACE ADMINISTRATION

GODDARD SPACE FLIGHT CENTER GREENBELT, MARYLAND
FACILITIES MANAGEMENT DIVISION

DATE ISSUED	CoF CODE OR WR#	AECOM PROJECT NO.	SCALE
10/12/2012	12GXAZ	60187636	1/8" = 1'-0"

FILE DATE: 10/8/2012 3:37:47 PM

KEYED NOTES:

1. PROVIDE INSPECTOR'S TEST CONNECTION LOCATED AT REMOTE LOCATION FROM SUPPLY, DISCHARGING TO A SPLASH BLOCK ON THE ROOF.
2. ROUTE MAIN DRAIN TO BUILDING EXTERIOR ROOF.
3. COORDINATE SHUNT TRIP FUNCTIONS WITH FIRE ALARM DESIGN DRAWINGS AND EQUIPMENT INSTALLERS. PROVIDE INTERMEDIATE TEMPERATURE SPRINKLERS THIS ZONE.
4. PROVIDE SPRINKLERS BENEATH ALL AREAS WHERE DUCTWORK MORE THAN 48 INCHES WIDE OBSTRUCTS CEILING SPRINKLERS. PROVIDE SUPPORTS PER NFPA 13 FOR SPRINKLER DROPS. PROVIDE GUARDS ON DROPPED SPRINKLERS LESS THAN 7 FT. ABOVE FINISHED FLOOR.
5. SPRINKLER MAIN UP TO ELEVATOR MACHINE ROOM PARTIAL MEZZANINE LEVEL. SEE ARCHITECTURAL SHEETS FOR ROOM DETAILS. PROVIDE SPRINKLER COVERAGE UNDER MEZZANINE AS WELL.

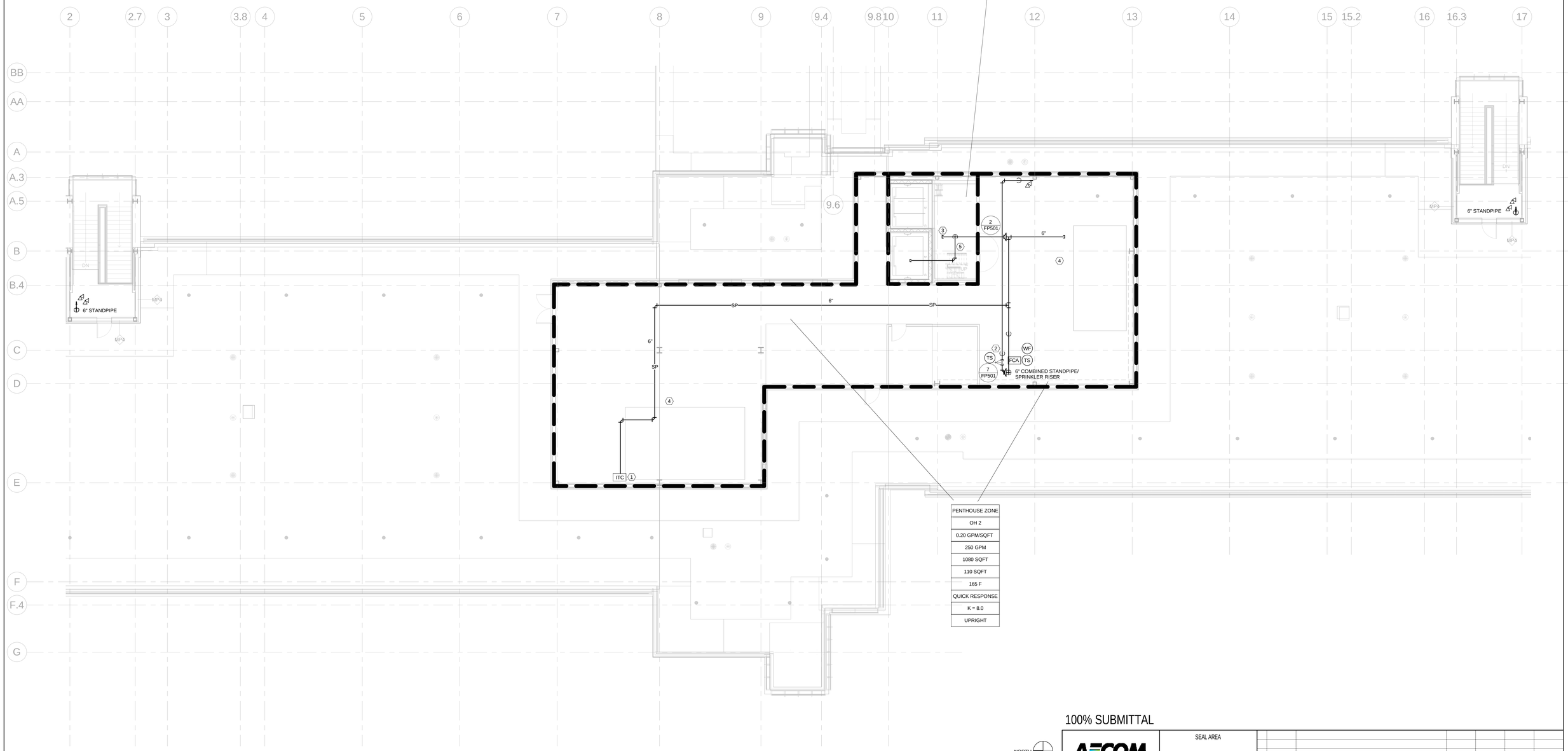

100% SUBMITTAL

NORTH

1/8"=1'-0" 8' 4' 0 8' 16'

AECOM

AECOM TECHNICAL SERVICES, INC.
3101 WILSON BOULEVARD
SUITE 900
ARLINGTON, VA 22201

T: 703-682-4900 F: 703.682.4901
www.aecom.com

SEAL AREA

STATE OF MARYLAND
JOSEPH FERGUSON
10-12-12

KEY PLAN

PH

REV	DATE	DESCRIPTION	S&R BR.	CUSTOMER	PM	SECT. HEAD

	INITIALS	DATE
DRAWN BY	TGL	
CHECKED BY	FM	
A-E MANAGER	EW	
ENVIRONMENTAL BRANCH	JH	
SAFETY BRANCH	CS	
CM	MMD	
PM	RWP	
CUSTOMER	JWB	
ENG. BRANCH	DGL	

PENTHOUSE FIRE PROTECTION PLAN

FP-105

FLIGHT PROJECTS BUILDING

NATIONAL AERONAUTICS AND SPACE ADMINISTRATION

GODDARD SPACE FLIGHT CENTER GREENBELT, MARYLAND
FACILITIES MANAGEMENT DIVISION

DATE ISSUED	CoF CODE OR WR#	AECOM PROJECT NO.	SCALE
10/12/2012	12GXAZ	60187636	1/8" = 1'-0"

FILE DATE: 10/8/2012 3:37:52 PM

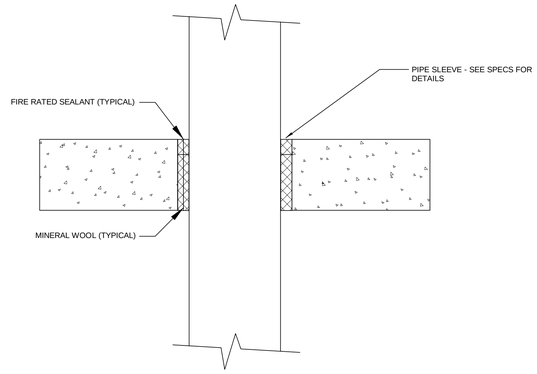

2 FP501 FIRE RATED HORIZONTAL ASSEMBLY PENETRATION DETAIL

SCALE: NTS

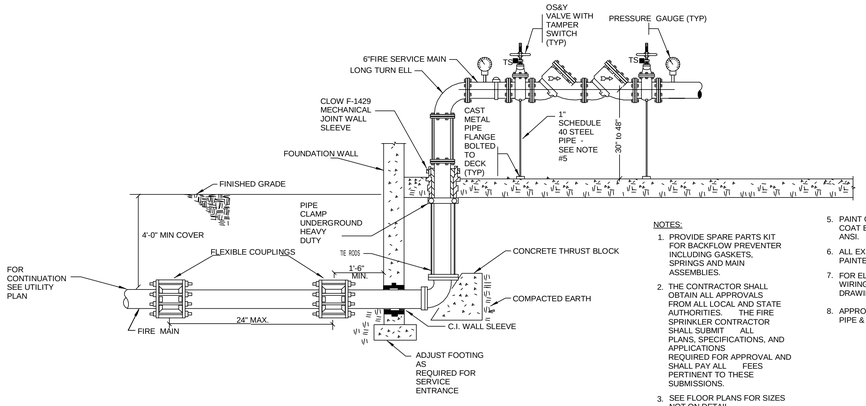

NOTES:

1. PROVIDE SPARE PARTS KIT FOR BACKFLOW PREVENTER INCLUDING GASKETS, SPRINGS AND MAIN ASSEMBLIES.
2. THE CONTRACTOR SHALL OBTAIN ALL APPROVALS FROM ALL LOCAL AND STATE AUTHORITIES. THE FIRE SPRINKLER CONTRACTOR SHALL SUBMIT ALL PLANS, SPECIFICATIONS, AND APPLICATIONS REQUIRED FOR APPROVAL AND SHALL PAY ALL FEES PERTINENT TO THESE SUBMISSIONS.
3. SEE FLOOR PLANS FOR SIZES NOT ON DETAIL.
4. MAINTAIN MINIMUM 1'-0" CLEARANCE BETWEEN WALL AND ITEMS SHOWN IN THIS DETAIL.
5. PAINT ONE COAT PRIMER AND ONE COAT EPOXY RESIN, COLOR PER ANSI.
6. ALL EXPOSED SPRINKLER PIPE SHALL BE PAINTED PER NOTE #5.
7. FOR ELECTRIC POWER AND WIRING SEE ELECTRICAL DRAWINGS.
8. APPROVED MECHANICAL JOINT PIPE & FITTINGS MAY BE USED.

6 FP501 FIRE SERVICE DETAIL - TYPICAL

SCALE: NTS

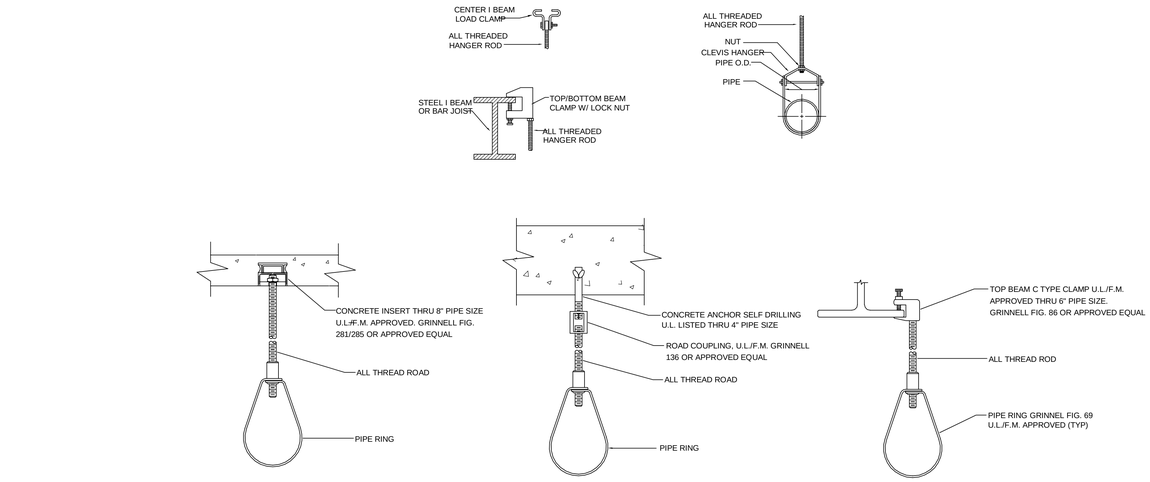

3 FP501 SPRINKLER PIPE HANGER DETAIL

SCALE: NTS

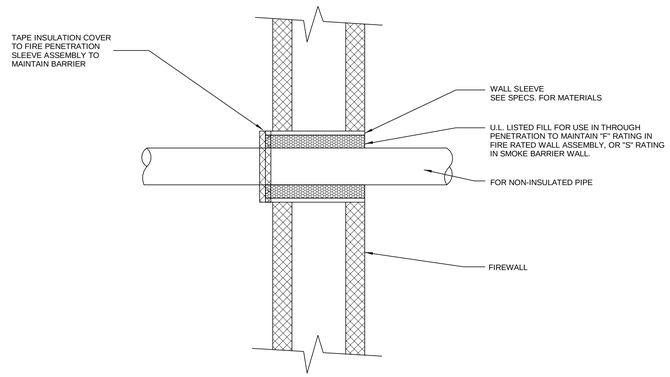

2 FP501 FIRE- AND SMOKE-RATED WALL PENETRATION DETAIL

SCALE: NTS

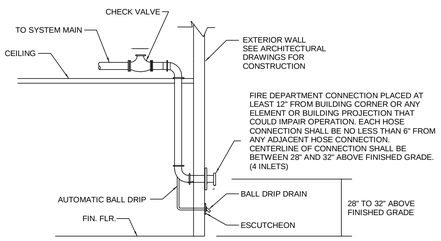

PROVIDE SIGN ON EXTERIOR WALL ABOVE FDC STATING: "STANDPIPE AND AUTOMATIC SPRINKLER"

PROVIDE A CLEAR AND UNOBSTRUCTED PATH, FREE OF PLANTINGS, FROM THE STREET TO THE FIRE DEPARTMENT CONNECTION.

MOUNT FDC WITHIN 100 FT OF A FIRE HYDRANT.

FDC SHALL BE PROVIDED WITH APPROPRIATE PROTECTIVE CAPS AND CHAIN. THE MINIMUM LENGTH OF CHAIN SHALL BE 12 INCHES.

FDC SHALL BE OF AN APPROVED TYPE FOR P.G. COUNTY FIRE DEPARTMENT APPARATUS.

1 FP501 FIRE DEPARTMENT CONNECTION DETAIL

SCALE: NTS

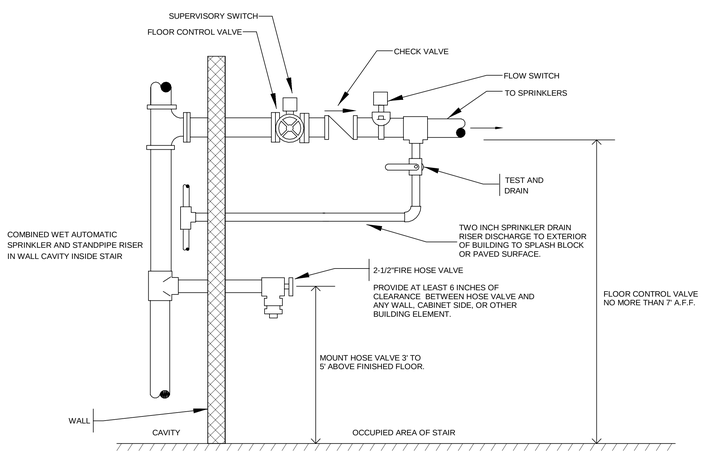

5 FP501 FLOOR CONTROL VALVE ASSEMBLY

SCALE: NTS

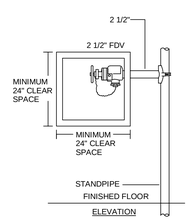

HOSE VALVES SHALL HAVE MINIMUM 6" CLEARANCE FROM BUILDING WALLS, SIDE OF CABINET, OR OTHER BUILDING BUILDING ELEMENTS.

4 FP501 2 1/2" HOSE CONNECTION CABINET DETAIL

SCALE: NTS

100% SUBMITTAL

AECOM

AECOM TECHNICAL SERVICES, INC.
3101 WILSON BOULEVARD
SUITE 900
ARLINGTON, VA 22201

T: 703-682-4900 F: 703.682.4901
www.aecom.com

SEAL AREA

STATE OF MARYLAND JOSEPH HOOPERMAN No. 15 PROFESSIONAL ENGINEER

10-12-12

KEY PLAN

REV	DATE	DESCRIPTION	S&R BR.	CUSTOMER	PM	SECT. HEAD

	INITIALS	DATE
DRAWN BY	TGL	
CHECKED BY	FM	
A-E MANAGER	EW	
ENVIRONMENTAL BRANCH	JH	
SAFETY BRANCH	CS	
CM	MMD	
PM	RWP	
CUSTOMER	JWB	
ENG. BRANCH	DGL	

FIRE PROTECTION DETAILS

FP-501

FLIGHT PROJECTS BUILDING

NATIONAL AERONAUTICS AND SPACE ADMINISTRATION

GODDARD SPACE FLIGHT CENTER GREENBELT, MARYLAND
FACILITIES MANAGEMENT DIVISION

DATE ISSUED	CoF CODE OR WR#	AECOM PROJECT NO.	SCALE
10/12/2012	12GXAZ	60187636	NTS

FILE DATE: 10/8/2012 3:37:54 PM

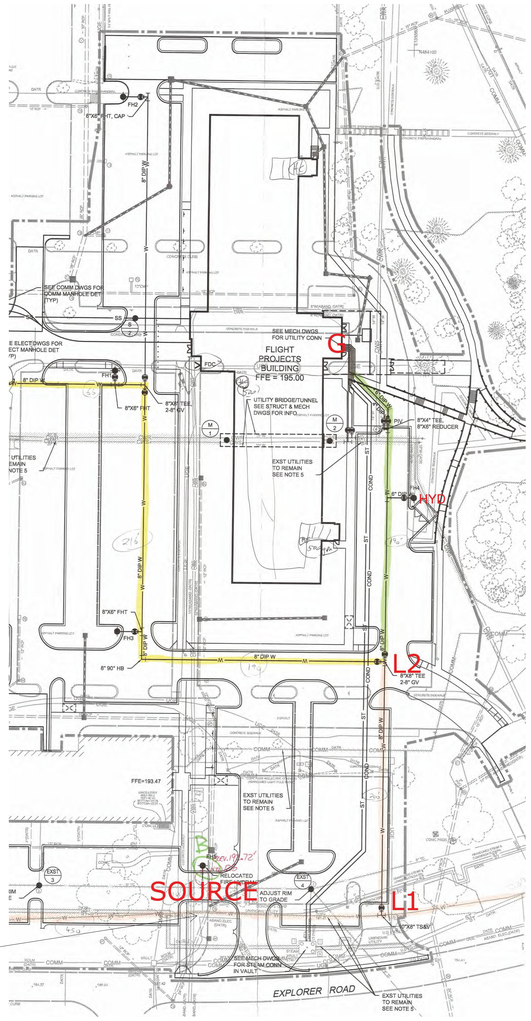

RESIDUAL PRESSURE MEASURED AT HYDRANT 126, SOUTH OF THE BUILDING AND MARKED AS "SOURCE." HYDRANTS 121 AND 122 FLOWED, AND ARE NOT SHOWN ON THE DRAWING TO THE RIGHT.

2. FP601 FIRE FLOW TEST LOCATION DIAGRAM
SCALE: 1" = 70'

NOTES:

1. FULL FLOW TEST CAPABILITY FOR BACK-FLOW PREVENTER PROVIDED BY FIRE TEST HEADER.

2. TWO INCH EXPRESS DRAINS TO BE PROVIDED IN EACH STAIR, DISCHARGING TO EXTERIOR AT LEVEL 1. DRAIN RISERS NOT SHOWN ON THIS DRAWING FOR CLARITY.

3. HOSE CONNECTIONS PROVIDE BOTTOM DRAINAGE FOR EACH STAIRWAY STANDPIPE.

4. 2" AUXILIARY DRAIN TO BE PROVIDED AT BOTTOM OF CENTER STANDPIPE. PROVIDE CONNECTION FOR SMALL HOSE FOR DRAINAGE USE ONLY IN BOTTOM OF FIRE HOSE VALVE CABINET AT LEVEL 1.

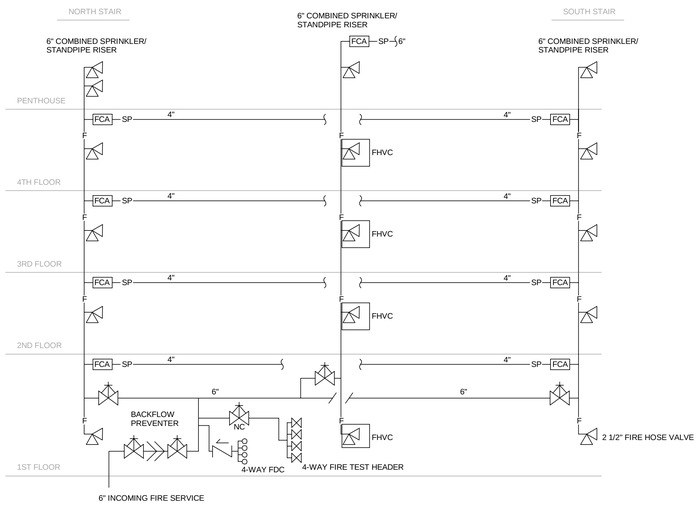

1. FP601 FIRE SUPPRESSION RISER SCHEMATIC DIAGRAM
SCALE: NTS

100% SUBMITTAL

AECOM
AECOM TECHNICAL SERVICES, INC.
3101 WILSON BOULEVARD
SUITE 900
ARLINGTON, VA 22201
T: 703-682-4900 F: 703.682.4901
www.aecom.com

SEAL AREA

KEY PLAN

REV	DATE	DESCRIPTION	S&R BR.	CUSTOMER	PM	SECT. HEAD

	INITIALS	DATE
DRAWN BY	TGL	
CHECKED BY	FM	
A-E MANAGER	EW	
ENVIRONMENTAL BRANCH	JH	
SAFETY BRANCH	CS	
CM	MMD	
PM	RWP	
CUSTOMER	JWB	
ENG. BRANCH	DGL	

FIRE PROTECTION DIAGRAMS

FP-601

FLIGHT PROJECTS BUILDING

NATIONAL AERONAUTICS AND SPACE ADMINISTRATION
GODDARD SPACE FLIGHT CENTER GREENBELT, MARYLAND
FACILITIES MANAGEMENT DIVISION

DATE ISSUED	CoF CODE OR WR#	AECOM PROJECT NO.	SCALE
10/12/2012	12GXAZ	60187636	NTS

FILE DATE: 10/8/2012 3:37:56 PM

FIRE ALARM SYMBOLS:

Symbol	Description
AIM / PS	ADDRESSABLE INPUT MODULE - PUMP SUPERVISORY
BPS	BOOSTER POWER SUPPLY
(heat)	HEAT DETECTOR
(smoke)	SMOKE DETECTOR
(smoke) SD	SMOKE DAMPER SMOKE DETECTOR
(duct smoke)	DUCT SMOKE DETECTOR
AIM / WF	MONITOR MODULE - WATER FLOW SWITCH
AIM / TS	MONITOR MODULE - TAMPER SWITCH
CM / AHU	CONTROL MODULE - AIR HANDLING UNIT
CM / DC	CONTROL MODULE - DOOR CLOSER
CM (AS NOTED)	MISCELLANEOUS CONTROL MODULE FUNCTIONS AS INDICATED
FTR	FIRE ALARM TRANSPONDER PANEL (REMOTE CONTROL PANEL WITHOUT ANNUNCIATOR PROVIDES REMOTE AMPLIFIER FUNCTIONS)
PRT	PRINTER
LED	INDICATING L.E.D. FOR ACTIVATED DUCT DETECTOR
110 / A	CEILING STROBE 110 ETC. CANDELA RATING A, AMBER
110	WALL MOUNT STROBE
FACU	FIRE ALARM/MASS NOTIFICATION CONTROL PANEL
DACT	DIGITAL ALARM COMMUNICATOR TRANSMITTER
LOC	LOCAL OPERATOR CONSOLE FOR MASS NOTIFICATION SYSTEM
FAA	FIRE ALARM GRAPHIC ANNUNCIATOR
P	MANUAL PULL STATION
S	CEILING MOUNTED SPEAKER
S / 110	CEILING MOUNTED SPEAKER STROBE 110 ETC. CANDELA RATING
TEXT	TEXT ALERT SIGN AT EXIT
AR	AREA OF REFUGE 2-WAY COMMUNICATION DEVICE
AR	AREA OF REFUGE RECEIVER

ABBREVIATIONS:

110, ETC.	CANDELA RATING
A	AMBER (FOR MN STROBES)
AHU	AIR HANDLING UNIT
AIM	ADDRESSABLE INPUT MODULE
AR	AREA OF REFUGE
ASD	AIR SAMPLING DEVICE
DACT	DIGITAL ALARM COMMUNICATOR TRANSMITTER
E	ELEVATOR RECALL
FAA	FIRE ALARM ANNUNCIATOR
FACP	FIRE ALARM CONTROL PANEL
FACU	FIRE ALARM CONTROL UNIT
LOC	LOCAL OPERATOR CONSOLE
P	MANUAL PULL STATION
PIV	POST INDICATING VALVE
PS	PUMP SUPERVISORY
RTS	REMOTE TEST SWITCH
S	SPEAKER
SD	SMOKE DAMPER
TS	TAMPER SWITCH
UON	UNLESS OTHERWISE NOTED
WF	WATER FLOW
WP	WEATHER PROOF

FIRE PROTECTION CODE ANALYSIS:

APPLICABLE CODES AND STANDARDS

STANDARD REFERENCE DOCUMENT FOR FACILITIES, JULY, 2010
INTERNATIONAL BUILDING CODE (IBC), 2009
NASA STD 8719.11A, SAFETY STANDARD FOR FIRE PROTECTION, NOVEMBER, 2008
NFPA 70, NATIONAL ELECTRICAL CODE, 2011
NFPA 72, NATIONAL FIRE ALARM CODE, 2010
NFPA 90A, STANDARD FOR THE INSTALLATION OF AIR-CONDITIONING AND VENTILATING SYSTEMS 2009
NFPA 101, LIFE SAFETY CODE, 2009

FIRE DETECTION AND ALARM SYSTEM REQUIREMENTS - GENERAL SCOPE OF WORK

A COMPLETE, ANALOG-ADDRESSABLE FIRE ALARM AND MASS NOTIFICATION SYSTEM SHALL BE PROVIDED THROUGHOUT ALL LEVELS.
THE FIRE ALARM SYSTEM SHALL CONSIST OF SPEAKERS AND STROBES ARRANGED FOR PROVIDING A GENERAL ALARM TO PROVIDE AUDIBILITY AND INTELLIGIBILITY THROUGHOUT ALL OCCUPIED AREAS, AND STROBE COVERAGE THROUGHOUT ALL COMMON AREAS.
THE FIRE ALARM SYSTEM SHALL BE A SIEMENS XLS SYSTEM.
A REMOTE CONNECTION SHALL BE PROVIDED TO THE GODDARD BUILDING 31 OPERATORS WORK STATION FOR MONITORING OF THE SYSTEM AT THE FLIGHT PROJECTS BUILDING AND THE NASA CENTER CENTRAL FIRE ALARM MONITORING SYSTEM.
DETECTION SHALL BE PROVIDED FOR ELEVATOR LOBBIES, ELEVATOR MACHINERY ROOMS, AND FOR THE AIR HANDLING SYSTEM.
A REMOTE FLUSH MOUNTED GRAPHIC ANNUNCIATOR SHALL BE PROVIDED AT THE MAIN ENTRANCE TO THE BUILDING.
MANUAL PULL STATIONS SHALL BE PROVIDED AT EACH LEVEL OF THE EXIT STAIRS.
WATER FLOW SWITCHES SHALL BE PROVIDED FOR EACH SPRINKLER ZONE, AND TAMPER SWITCHES SHALL BE PROVIDED FOR EACH SPRINKLER CONTROL VALVE.
SHUNT TRIP DETECTORS SHALL BE PROVIDED FOR THE ELEVATOR MACHINERY ROOM.
TEXT SIGNS SHALL BE PROVIDED ABOVE EXIT DOORS AS SHOWN ON THE PLANS.
AREA OF REFUGE 2 WAY COMMUNICATION DEVICES SHALL BE PROVIDED AT LOCATIONS SHOWN ON THE PLANS.
AN INTERFACE SHALL BE PROVIDED FROM THE FA/MNS PANEL TO THE EXISTING GODDARD ePAS SYSTEM TO ALLOW THE PUBLIC ADDRESS SYSTEM TO TEMPORARILY DISABLE THE FIRE ALARM PANEL (IF NECESSARY) AND BROADCAST MASS NOTIFICATION MESSAGES THROUGHOUT THE BUILDING. SEE THE WRITTEN FA SPECIFICATION FOR ADDITIONAL DETAILS ON THIS INTERFACE.

GENERAL PROJECT NOTES:

1. INSTALLATION SHALL BE DONE IN ACCORDANCE WITH THE SITE REQUIREMENTS, STANDARD REFERENCE DOCUMENT FOR FACILITIES, JULY, 2010, NASA-STD-8719.11, NFPA 70 (2011), NFPA 72 (2010), AND NFPA 101 (2009).

2. THE FIRE ALARM PLANS ARE DIAGRAMMATIC ONLY. DEVICES MAY REQUIRE ADJUSTMENT IN THE FIELD.

3. THE CONTRACTOR SHALL ROUTE WIRING AND CONDUIT ALONG THE SHORTEST AND MOST COST EFFECTIVE ROUTE WHERE POSSIBLE. DO NOT MIX POWER LIMITED AND NON-POWER LIMITED WIRING WITHIN THE SAME CONDUIT. CONTRACTOR SHALL NOT EXCEED 40% CONDUIT FILL. KEEP SLC AND AUDIO CIRCUITS SEPARATED.

4. COORDINATE ALL FIRE ALARM EQUIPMENT WITH ALL OTHER TRADES TO AVOID CONFLICTS. PROVIDE ALL NECESSARY FITTINGS, EQUIPMENT, HANGERS, OFFSETS, ROUTING, ETC. TO AVOID ALL CONFLICTS AT NO ADDITIONAL COST.

5. COORDINATE JUNCTION BOX MOUNTING HEIGHTS FOR EQUIPMENT FURNISHED BY OTHER TRADES, ADJUST AS NECESSARY TO ACCOMMODATE THE EQUIPMENT SELECTED. PROVIDE ALL FINAL CONNECTIONS TO NEW EQUIPMENT.

6. CONTRACTOR SHALL PROVIDE ALL END OF LINE DEVICES AS REQUIRED TO MATCH THE CONTROL EQUIPMENT REQUIREMENTS AND TO SUPERVISE ALL CIRCUITS.

7. CONTRACTOR SHALL VERIFY ALL WIRE SIZES BASED ON ACTUAL CIRCUIT LENGTH INSTALLED IN THE FIELD TO STAY WITHIN THE MANUFACTURER'S ACCEPTABLE VOLTAGE DROP. SUBMIT WIRE SIZE SUBSTITUTIONS FOR APPROVAL. CHANGES IN WIRE SIZE SHALL BE AT NO ADDITIONAL COST.

8.PROVIDE THE MANUFACTURER'S RECOMMENDED SIZE AND TYPE OF CABLING BETWEEN ALL FIRE ALARM EQUIPMENT REQUIRING CONNECTIONS TO FUNCTION PROPERLY.

9. EXPOSED BOXES AND CONDUIT SHALL BE PAINTED TO MATCH THE EXISTING FINISHES.

10. ALL WIRING OUTSIDE OF CABINETS AND BOXES SHALL BE ROUTED IN CONDUIT IN ACCORDANCE WITH DIVISION 26 RACEWAY REQUIREMENTS.

11. ALL EXTERIOR APPLIANCES SHALL BE WEATHERPROOF.

12. ALL PENETRATIONS OF FIRE RATED PARTITIONS AND FLOORS SHALL BE FIRE STOPPED PER THE SPECIFICATIONS. CONTRACTOR SHALL PROVIDE FIRE STOPPING SUBMISSIONS FOR EACH ASSEMBLY FOR APPROVAL PRIOR TO INSTALLATION. REFER TO FIRESTOP SPECIFICATION SECTION FOR MORE INFORMATION. FLOOR PENETRATIONS NOT LOCATED WITHIN A FIRE RATED SHAFT SHALL BE FIRESTOPPED WITH SYSTEMS LISTED FOR 2 HOUR FIRE RESISTANCE.

13. DRAWINGS ARE DIAGRAMMATIC ONLY. CONTRACTOR IS ULTIMATELY RESPONSIBLE FOR FINALIZED DESIGN TO MEET REQUIREMENTS OF CODES AND SPECIFICATIONS.

14. THE CONTRACTOR SHALL BE RESPONSIBLE FOR DETERMINING THE NECESSARY NUMBER OF STROBE BOOSTER POWER SUPPLIES AND SPEAKER AMPLIFIERS.

FIRE ALARM GENERAL NOTES:

1. STROBES ARE IN PAIRS, ONE WITH A CLEAR LENS MARKED "FIRE" AND THE OTHER WITH AN AMBER LENS MARKED "ALERT" FOR MASS NOTIFICATION IN ALL AREAS.

2. SPEAKER LAYOUT IS TO ACHIEVE AN INTELLIGIBILITY SCORE OF 0.7 ON THE COMMON INTELLIGIBILITY SCALE (CIS), AND AUDIBILITY PER NFPA 72. DESIGN IS PERFORMANCE - BASED. CONTRACTOR MAY ADJUST NUMBERS OF SPEAKERS AS LONG AS AUDIBILITY AND INTELLIGIBILITY ARE ACHIEVED DURING TESTING. CONTRACTOR IS RESPONSIBLE FOR PROVIDING A FIRE ALARM AND MASS NOTIFICATION SYSTEM THAT COMPLIES WITH THE PERFORMANCE REQUIREMENTS OF THE SPECIFICATIONS. INTELLIGIBILITY OF FIRE ALARM/MASS NOTIFICATION MESSAGES SHALL BE PROVIDED BY ACHIEVING A COMMON INTELLIGIBILITY SCALE (CIS) SCORE OF AT LEAST 0.7 IN PUBLIC AREAS INCLUDING OPEN OFFICES, CORRIDORS, CONFERENCE ROOMS, AND RESTROOMS. INTELLIGIBILITY SHALL NOT BE REQUIRED IN MECHANICAL ROOMS, ELECTRICAL ROOMS, ELEVATOR MACHINERY ROOMS, ELEVATOR CABS, INDIVIDUAL OFFICES, KITCHEN AREAS, STORAGE ROOMS, STAIRWAYS, CLOSETS, OR EXTERIOR AREAS.

3. MOUNTING OF FIELD DEVICES SHALL BE COORDINATED IN THE FIELD. DEVICES IN FINISHED AREAS SHALL BE RECESSED IN GYPSUM BOARD PARTITIONS AND GYPSUM BOARD AND LAY IN CEILINGS. IN ALL OTHER LOCATIONS, DEVICES SHALL BE SURFACE MOUNTED AND BE PROVIDED WITH THE MANUFACTURER'S SURFACE MOUNTED BACK BOXES, U.O.N.

4. PULL STATIONS SHALL BE SEMI-FLUSH MOUNTED, DOUBLE-ACTION TYPE, WITH MANUAL RESET. A KEY IS REQUIRED AND IT SHALL BE THE SAME KEY AS REQUIRED FOR THE FIRE ALARM PANEL.

5. REMOTE INDICATING SWITCHES SHALL BE PROVIDED FOR DUCT DETECTORS AS SHOWN ON THE PLANS.

6. ROUTE ALL FIRE ALARM CABLE WITHIN FACTORY FINISHED RED METAL CONDUIT.

7. NOTIFICATION CIRCUITS FOR THE BUILDING SHALL BE CLASS A. "T" TAPPING OF NOTIFICATION CIRCUITS SHALL NOT BE ALLOWED.

8. SIGNALING LINE CIRCUITS (SLC) SHALL BE CLASS A. "T" TAPPING OF SLC CIRCUITS SHALL NOT BE ALLOWED.

9. PROVIDE SMOKE DETECTION ABOVE FACU'S PER 2010 NFPA 72 SECTION 10.15. SMOKE DETECTORS SHALL NOT BE LOCATED WITHIN 3 FEET OF RETURN OR SUPPLY AIR DIFFUSERS.

10. INDIVIDUAL MONITOR AND CONTROL MODULES ARE SHOWN FOR FUNCTIONS SUCH AS ELEVATOR CONTROL, WATER-FLOW AND TAMPER, ETC. FOR CLARITY. IF THE REQUIRED CONTROL OR MONITORING CAN BE ACHIEVED WITH COMBINATION MODULES, THIS IS THE CONTRACTOR'S OPTION.

11. AREA OF REFUGE 2-WAY COMMUNICATION DEVICES TO BE PROVIDED AS SHOWN. CONNECTING CIRCUITS SHALL BE ROUTED WITHIN 2 HOUR RATED CONSTRUCTION, OR SHALL USE LISTED CIRCUIT INTEGRITY CABLE. COMMUNICATING DEVICES SHALL BE HANDS FREE TYPE, ADA COMPLIANT, AND MOUNTED AS SHOWN ON DETAIL 1, SHEET FA-501. AREA OF REFUGE COMMUNICATION CIRCUITS SHALL REPORT TO THE MASTER COMMUNICATION DEVICE LOCATED AT THE FRONT LOBBY ON LEVEL 1. SEE WRITTEN FA SPECIFICATION FOR ADDITIONAL INFORMATION.

12. ENCLOSED EXIT STAIRS ARE TO BE PROVIDED WITH SEPARATE NOTIFICATION CIRCUITS FOR MANUAL PAGING ONLY. BOTH STAIRS MAY BE ON A COMMON CIRCUIT IF PERFORMANCE CRITERIA IS ACHEIVED.

13. THE ELEVATORS ARE TO BE PROVIDED WITH SEPARATE NOTIFICATION CIRCUITS FOR MANUAL PAGING ONLY. THE ELEVATORS MAY BOTH BE ON A COMMON CIRCUIT IF PERFORMANCE CRITERIA IS ACHIEVED.

14. CANDELA RATINGS SHOWN ARE SUGGESTIONS ONLY, AND MAY REQUIRE ADJUSTMENTS IN FIELD TO ACHIEVE REQUIRED CANDELA LEVELS.

15. ALL VISIBLE STROBES SHALL BE SYNCHRONIZED IN ACCORDANCE WITH NFPA 72 REQUIREMENTS.

16. CANDELA RATINGS FOR AMBER STROBES SHOWN ON THESE DRAWINGS ARE BASED ON SIEMENS CUT SHEETS THAT INDICATE DERATING AS FOLLOWS:
NOMINAL 30 CD DERATED TO 22 CD
NOMINAL 75 CD DERATED TO 56 CD
NOMINAL 95 CD DERATED TO 71 CD
NOMINAL 110 CD DERATED TO 82 CD

17. FOR THIS BUILDING EVACUATING IN A GENERAL ALARM MODE, SURVIVABILITY WILL COMPLY WITH NFPA 72 REQUIRMENTS FOR LEVEL 1 FOR A FULLY SPRINKLERED BUILDING WITH CABLES INSTALLED IN METAL CONDUIT FOR FIRE ALARM AND MASS NOTIFICATION SYSTEMS.

18. USE "LIQUID TITE" CONDUIT IN WET LOCATIONS.

19. DUCT SMOKE DETECTORS SHALL BE MOUNTED IN READILY ACCESSIBLE LOCATIONS TO FACILITATE MAINTENANCE.

20. SMOKE DETECTORS FOR DOOR RELEASING SERVICE SHALL BE LISTED FOR RELEASING SERVICE.

21. OUTDOOR MASS NOTIFICATION SYSTEM SPEAKERS AND STROBES SHALL HAVE THE CAPABILITY TO OPERATE INDEPENDENTLY FROM INDOOR MNS APPLIANCES.

22. THE CONNECTION TO THE CAMPUS FIRE ALARM NETWORK AND OWS IS VIA TWO FIBER OPTIC CIRCUITS TO THE FIRE ALARM NETWORK IN BUILDING 22 AND WILL REQUIRE MODIFICATION TO THE EXISTING NETWORK AT THIS POINT. THE FIBER OPTIC TYPE WILL BE SINGLE-MODE. ALL PROGRAMMING WILL BE REQUIRED.

23. A DUCT ACCESS DOOR SHALL BE INSTALLED ADJACENT TO EACH FIRE DAMPER, SMOKE DAMPER, AND DUCT SMOKE DETECTOR FOR MAINTENANCE AND INSPECTION. SIZE SHALL BE LARGE ENOUGH FOR INTENDED PURPOSE AND SHALL BE APPROVED BY THE GOVERNMENT. SEE MECHANICAL DRAWINGS M-502 AND M-504 THAT SHOW ACCESS PANELS.

24. PROVIDE TEXT SIGNS ABOVE EXIT DOORS AS SHOWN. THESE SIGNS READ "EVACUATE" WHEN FIRE ALARM SYSTEM IS IN ALARM, AND READ "ANNOUNCEMENT" WHEN MASS NOTIFICATION SYSTEM IS ACTUATED. THE TEXT SIGN SHALL STAY ILLUMINATED 10 SECONDS AFTER THE ANNOUNCEMENT IS FINISHED. SEE FA SPECIFICATION FOR ADDITIONAL INFORMATION.

100% SUBMITTAL

AECOM
AECOM TECHNICAL SERVICES, INC.
3101 WILSON BOULEVARD
SUITE 900
ARLINGTON, VA 22201

T: 703-682-4900 F: 703.682.4901
www.aecom.com

SEAL AREA

10-12-12

KEY PLAN

REV	DATE	DESCRIPTION	S&R BR.	CUSTOMER	PM	SECT. HEAD

	INITIALS	DATE
DRAWN BY	TGL	
CHECKED BY	FM	
A-E MANAGER	EW	
ENVIRONMENTAL BRANCH	JH	
SAFETY BRANCH	CS	
CM	MMD	
PM	RWP	
CUSTOMER	JWB	
ENG. BRANCH	DGL	

FIRE ALARM LEGEND, ABBREVIATIONS, AND SYMBOLS

FA-001

FLIGHT PROJECTS BUILDING

NATIONAL AERONAUTICS AND SPACE ADMINISTRATION

GODDARD SPACE FLIGHT CENTER GREENBELT, MARYLAND
FACILITIES MANAGEMENT DIVISION

DATE ISSUED	CoF CODE OR WR#	AECOM PROJECT NO.	SCALE
10/12/2012	12GXAZ	60187636	

FILE DATE: 10/9/2012 2:05:40 PM

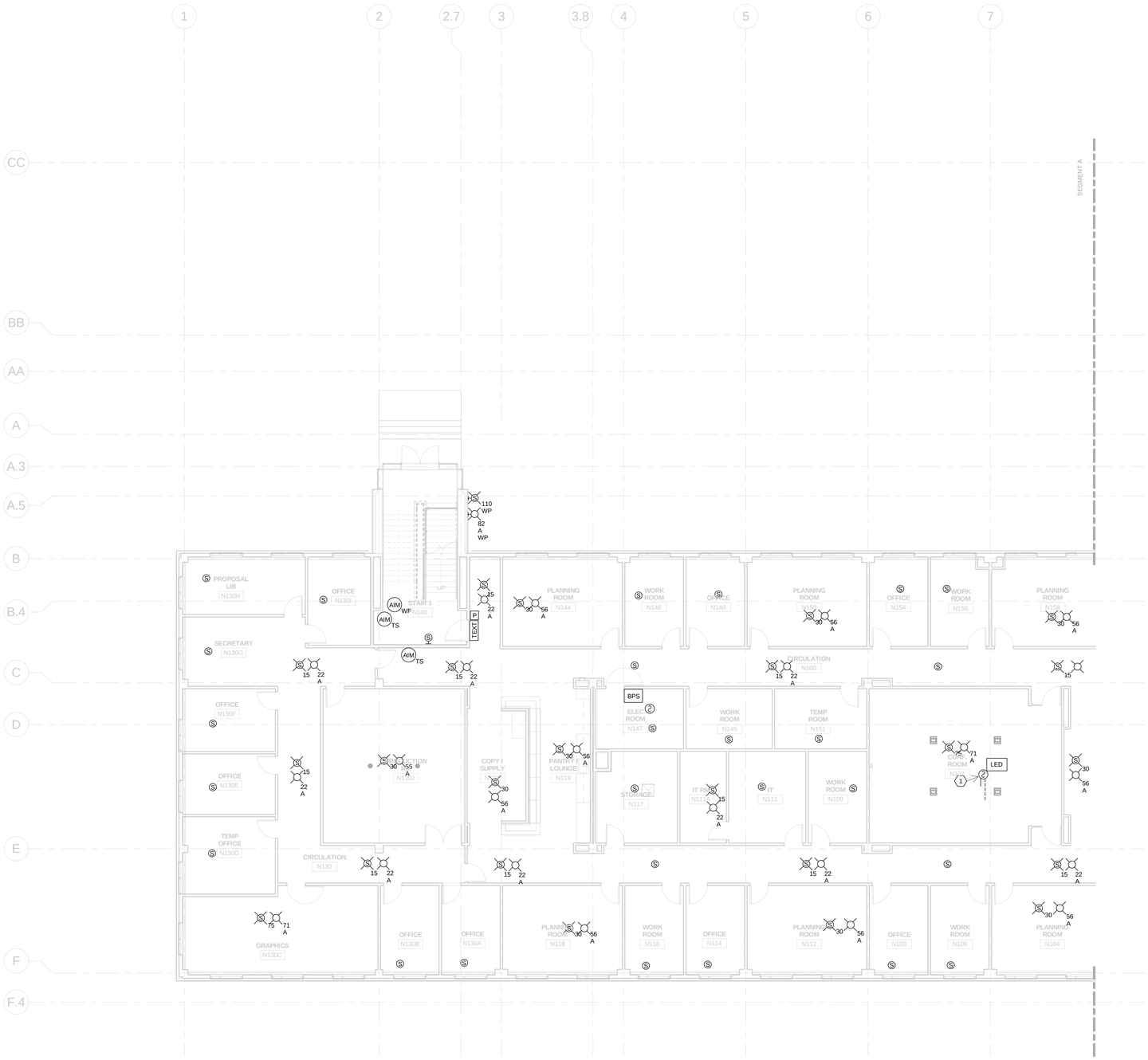

KEYED NOTES:

1. ACTUATION OF THIS DUCT DETECTOR SHUTS DOWN ASSOCIATED AIR HANDLER UNIT.

100% SUBMITTAL

NORTH

1/8"=1'-0" 8' 4' 0 8' 16'

AECOM

AECOM TECHNICAL SERVICES, INC.
3101 WILSON BOULEVARD
SUITE 900
ARLINGTON, VA 22201

T: 703-682-4900 F: 703.682.4901
www.aecom.com

SEAL AREA

STATE OF MARYLAND

KEY PLAN

SEGMENT - A

REV	DATE	DESCRIPTION	S&R BR.	CUSTOMER	PM	SECT. HEAD

	INITIALS	DATE
DRAWN BY	TGL	
CHECKED BY	FM	
A-E MANAGER	EW	
ENVIRONMENTAL BRANCH	JH	
SAFETY BRANCH	CS	
CM	MMD	
PM	RWP	
CUSTOMER	JWB	
ENG. BRANCH	DGL	

LEVEL-1 FIRE ALARM PLAN SEGMENT A

FA-101a

FLIGHT PROJECTS BUILDING

NATIONAL AERONAUTICS AND SPACE ADMINISTRATION

GODDARD SPACE FLIGHT CENTER GREENBELT, MARYLAND
FACILITIES MANAGEMENT DIVISION

DATE ISSUED	CoF CODE OR WR#	AECOM PROJECT NO.	SCALE
10/12/2012	12GXAZ	60187636	1/8" = 1'-0"

FILE DATE: 10/9/2012 2:05:45 PM

KEYED NOTES:

1. SMOKE DETECTOR AT THIS LOCATION IS FOR ACTUATION OF DOOR CLOSERS ON DOORS TO MAIN LOBBY FROM WING. THIS DETECTOR ALSO PERFORMS FUNCTIONS AS SHOWN ON THE FIRE ALARM MATRIX.
2. ACTUATION OF THIS DUCT DETECTOR:
   1. SHUTS DOWN ASSOCIATED AIR HANDLER UNIT.
   2. CLOSES ALL SMOKE DAMPERS AT SMOKE BARRIER.
3. DUCT DETECTOR:
   1. CLOSES SMOKE DAMPERS AT SMOKE BARRIER.
4. DUCT DETECTOR:
   1. SHUTS DOWN ASSOCIATED AHU.
5. MAIN FIRE ALARM/MASS NOTIFICATION SYSTEM CONTROL PANEL.
6. REMOTE CONTROL PANEL WITH LED TYPE ANNUNCIATOR AND EQUAL FUNCTIONALITY OF MAIN ELECTRICAL ROOM FACU, SIEMENS MODEL SSD-C.

100% SUBMITTAL

NORTH

1/8"=1'-0" 8' 4' 0 8' 16'

AECOM

AECOM TECHNICAL SERVICES, INC.
3101 WILSON BOULEVARD
SUITE 900
ARLINGTON, VA 22201

T: 703-682-4900 F: 703.682.4901
www.aecom.com

SEAL AREA

STATE OF MARYLAND
JOSEPH FRANCESCONI
No. 15 PE
16-12-12

KEY PLAN

SEGMENT - B

REV	DATE	DESCRIPTION	S&R BR.	CUSTOMER	PM	SECT. HEAD

	INITIALS	DATE
DRAWN BY	TGL	
CHECKED BY	FM	
A-E MANAGER	EW	
ENVIRONMENTAL BRANCH	JH	
SAFETY BRANCH	CS	
CM	MMD	
PM	RWP	
CUSTOMER	JWB	
ENG. BRANCH	DGL	

LEVEL-1 FIRE ALARM PLAN SEGMENT B

FA-101b

FLIGHT PROJECTS BUILDING

NATIONAL AERONAUTICS AND SPACE ADMINISTRATION

GODDARD SPACE FLIGHT CENTER GREENBELT, MARYLAND
FACILITIES MANAGEMENT DIVISION

DATE ISSUED	CoF CODE OR WR#	AECOM PROJECT NO.	SCALE
10/12/2012	12GXAZ	60187636	1/8" = 1'-0"

FILE DATE: 10/9/2012 2:05:54 PM

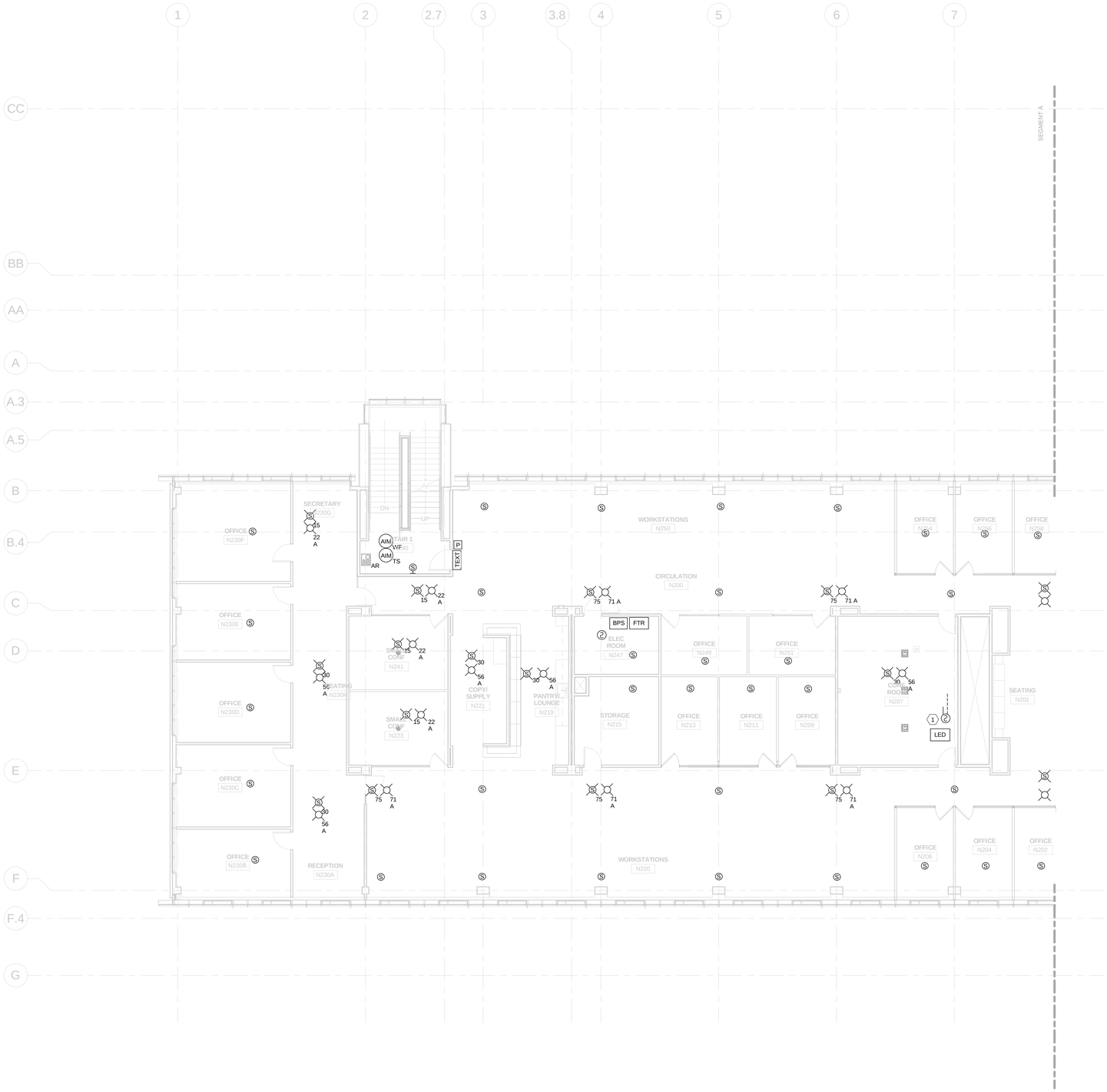

KEYED NOTES:

1. ACTUATION OF THE DUCT DETECTOR SHUTS DOWN ASSOCIATED AIR HANDLER UNIT.

100% SUBMITTAL

NORTH

1/8"=1'-0" 8' 4' 0 8' 16'

AECOM

AECOM TECHNICAL SERVICES, INC.
3101 WILSON BOULEVARD
SUITE 900
ARLINGTON, VA 22201

T: 703.682.4900 F: 703.682.4901
www.aecom.com

SEAL AREA

STATE OF MARYLAND
JOSEPH LAUGHLIN
No. 15000
PROFESSIONAL ENGINEER

10-12-12

KEY PLAN

SEGMENT - A

REV	DATE	DESCRIPTION	S&R BR.	CUSTOMER	PM	SECT. HEAD

	INITIALS	DATE
DRAWN BY	TGL	
CHECKED BY	FM	
A-E MANAGER	EW	
ENVIRONMENTAL BRANCH	JH	
SAFETY BRANCH	CS	
CM	MMD	
PM	RWP	
CUSTOMER	JWB	
ENG. BRANCH	DGL	

LEVEL-2 FIRE ALARM PLAN SEGMENT A

FA-102a

FLIGHT PROJECTS BUILDING

NATIONAL AERONAUTICS AND SPACE ADMINISTRATION

GODDARD SPACE FLIGHT CENTER GREENBELT, MARYLAND
FACILITIES MANAGEMENT DIVISION

DATE ISSUED	CoF CODE OR WR#	AECOM PROJECT NO.	SCALE
10/12/2012	12GXAZ	60187636	1/8" = 1'-0"

FILE DATE: 10/9/2012 2:06:01 PM

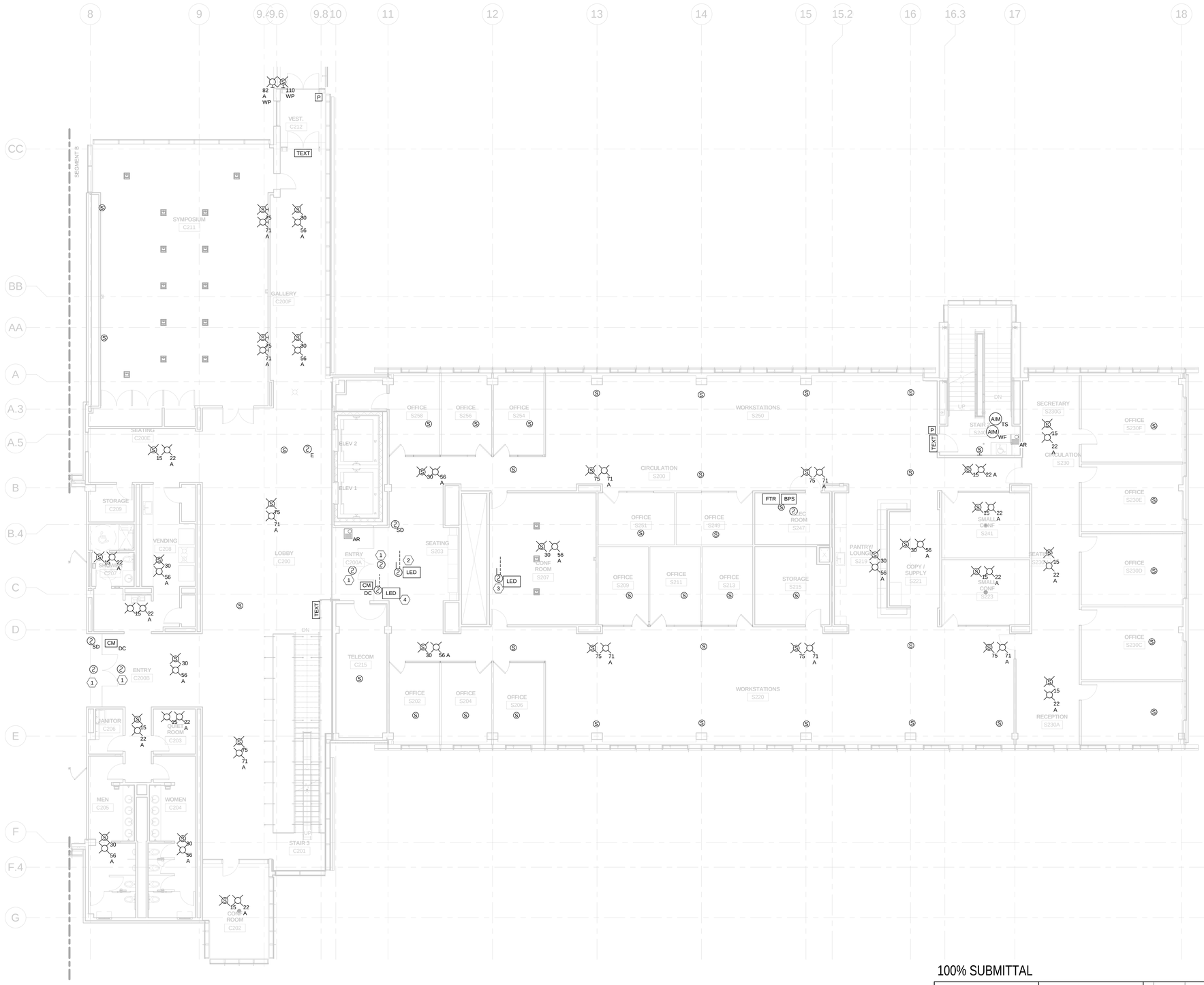

KEYED NOTES:

1. SMOKE DETECTOR AT THIS LOCATION IS FOR ACTUATION OF DOOR CLOSERS ON DOORS TO MAIN LOBBY FROM WING. THIS DETECTOR ALSO PERFORMS FUNCTIONS AS SHOWN ON THE FIRE ALARM MATRIX.
2. ACTUATION OF THIS DUCT DETECTOR:
   1. SHUTS DOWN ASSOCIATED AIR HANDLER UNIT.
   2. CLOSES ASSOCIATED SMOKE DAMPERS AT SMOKE BARRIER.
3. DUCT DETECTOR SHUTS ASSOCIATED AHU
4. DUCT DETECTOR:
   1. CLOSES ASSOCIATED SMOKE DAMPER AT SMOKE BARRIER.

100% SUBMITTAL

NORTH

1/8"=1'-0" 8' 4' 0 8' 16'

AECOM

AECOM TECHNICAL SERVICES, INC.
3101 WILSON BOULEVARD
SUITE 900
ARLINGTON, VA 22201

T: 703-682-4900 F: 703.682.4901
www.aecom.com

SEAL AREA

STATE OF MARYLAND
REGISTERED PROFESSIONAL ENGINEER
No. 12613
10-12-12

KEY PLAN

SEGMENT - B

REV	DATE	DESCRIPTION	S&R BR.	CUSTOMER	PM	SECT. HEAD

	INITIALS	DATE
DRAWN BY	TGL	
CHECKED BY	FM	
A-E MANAGER	EW	
ENVIRONMENTAL BRANCH	JH	
SAFETY BRANCH	CS	
CM	MMD	
PM	RWP	
CUSTOMER	JWB	
ENG. BRANCH	DGL	

LEVEL-2 FIRE ALARM PLAN SEGMENT B

FA-102b

FLIGHT PROJECTS BUILDING

NATIONAL AERONAUTICS AND SPACE ADMINISTRATION

GODDARD SPACE FLIGHT CENTER GREENBELT, MARYLAND
FACILITIES MANAGEMENT DIVISION

DATE ISSUED	CoF CODE OR WR#	AECOM PROJECT NO.	SCALE
10/12/2012	12GXAZ	60187636	1/8" = 1'-0"

FILE DATE: 10/9/2012 2:06:13 PM

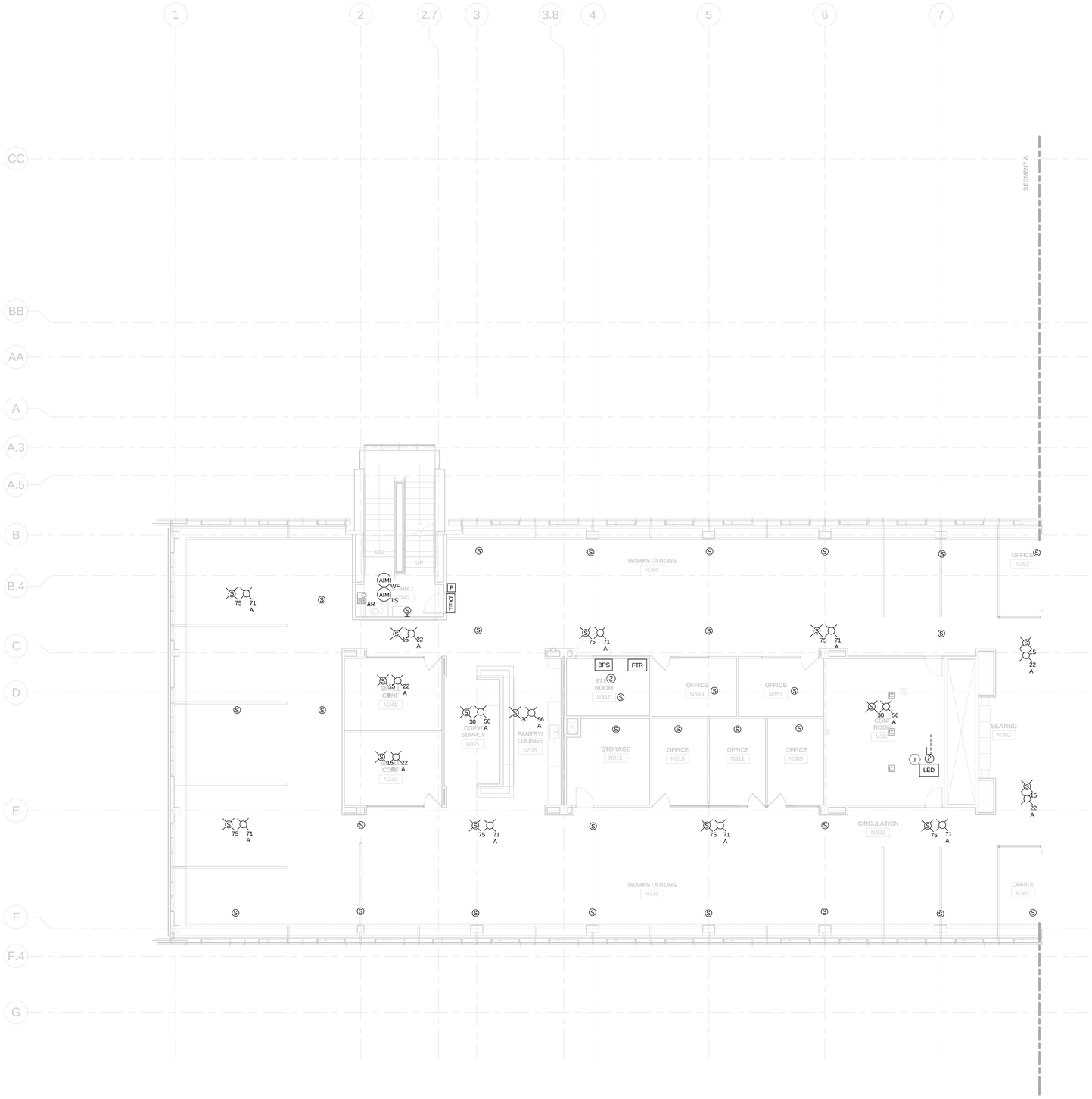

KEYED NOTES:

1. ACTIVATION OF DUCT DETECTOR SHUTS DOWN ASSOCIATED AHU.

100% SUBMITTAL

NORTH

1/8"=1'-0" 8' 4' 0 8' 16'

AECOM

AECOM TECHNICAL SERVICES, INC.
3101 WILSON BOULEVARD
SUITE 900
ARLINGTON, VA 22201

T: 703-682-4900 F: 703.682.4901
www.aecom.com

SEAL AREA

STATE OF MARYLAND
JOSEPH FRESCATORE
No. 15-13-5

KEY PLAN

SEGMENT - A

REV	DATE	DESCRIPTION	S&R BR.	CUSTOMER	PM	SECT. HEAD

	INITIALS	DATE
DRAWN BY	TGL	
CHECKED BY	FM	
A-E MANAGER	EW	
ENVIRONMENTAL BRANCH	JH	
SAFETY BRANCH	CS	
CM	MMD	
PM	RWP	
CUSTOMER	JWB	
ENG. BRANCH	DGL	

LEVEL-3 FIRE ALARM PLAN SEGMENT A

FA-103a

FLIGHT PROJECTS BUILDING

NATIONAL AERONAUTICS AND SPACE ADMINISTRATION

GODDARD SPACE FLIGHT CENTER GREENBELT, MARYLAND
FACILITIES MANAGEMENT DIVISION

DATE ISSUED	CoF CODE OR WR#	AECOM PROJECT NO.	SCALE
10/12/2012	12GXAZ	60187636	1/8" = 1'-0"

FILE DATE: 10/9/2012 2:06:21 PM

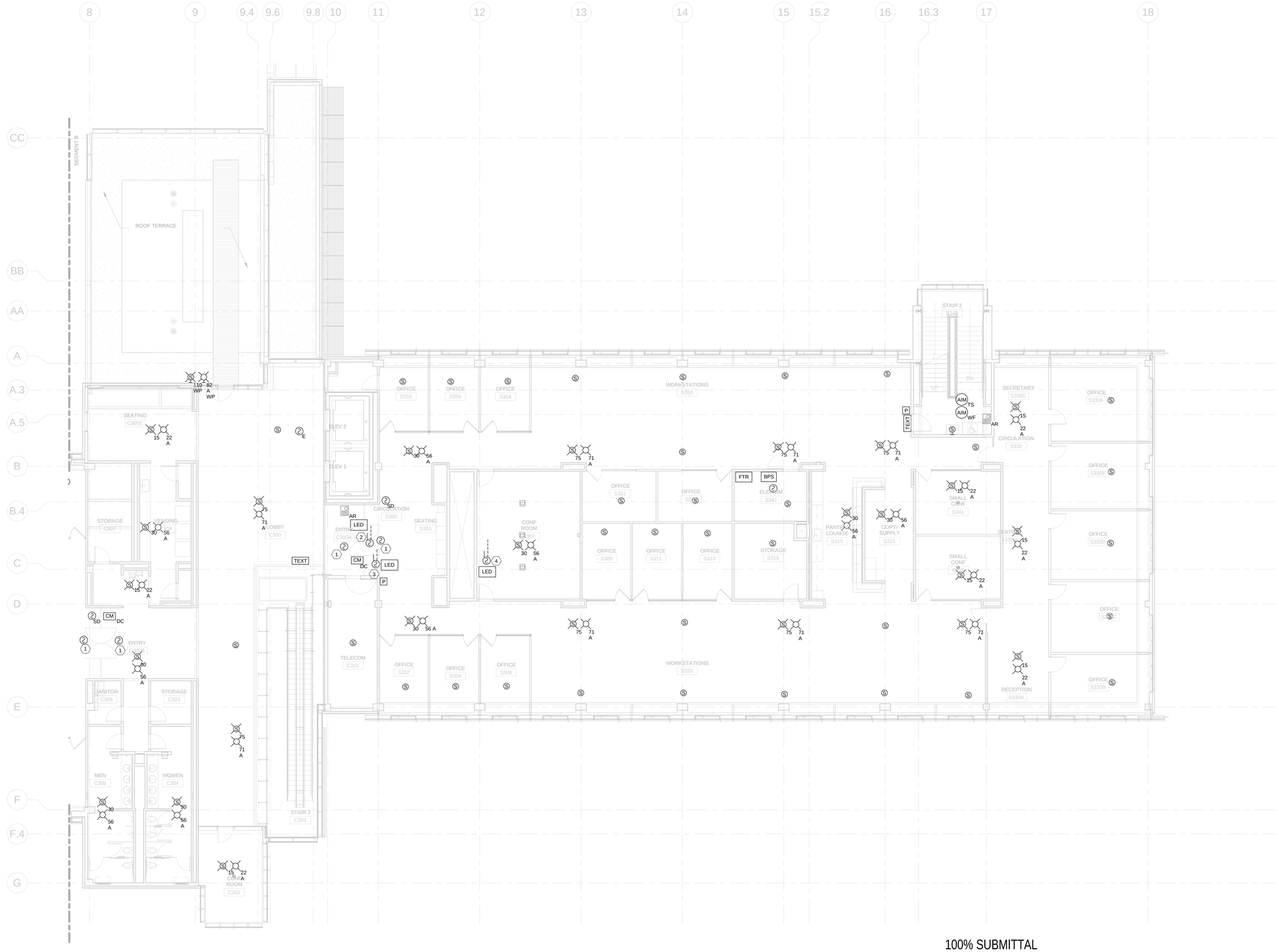

KEYED NOTES:

1. SMOKE DETECTOR AT THIS LOCATION IS FOR ACTUATION OF DOOR CLOSERS ON DOORS TO MAIN LOBBY FROM WING. THIS DETECTOR ALSO PERFORMS FUNCTIONS AS SHOWN ON THE FIRE ALARM MATRIX.
2. ACTUATION OF THIS DUCT DETECTOR:
   1. CLOSES ASSOCIATED SMOKE DAMPER AT SMOKE BARRIER.
   2. SHUTS ASSOCIATED AHU DOWN.
3. ACTUATION OF DUCT DETECTOR:
   1. CLOSES ASSOCIATED SMOKE DAMPER AT SMOKE BARRIER.
4. ACTIVATION OF DUCT DETECTOR SHUTS ASSOCIATED AHU DOWN.

100% SUBMITTAL

NORTH

1/8"=1'-0" 8' 4' 0 8' 16'

AECOM

AECOM TECHNICAL SERVICES, INC.
3101 WILSON BOULEVARD
SUITE 900
ARLINGTON, VA 22201

T: 703-682-4900 F: 703.682.4901
www.aecom.com

SEAL AREA

STATE OF MARYLAND
JOSEPH KUNGPAIBOON
No. 29884
PROFESSIONAL ENGINEER
10-12-12

KEY PLAN

SEGMENT - B

REV	DATE	DESCRIPTION	S&R BR.	CUSTOMER	PM	SECT. HEAD

	INITIALS	DATE
DRAWN BY	TGL	
CHECKED BY	FM	
A-E MANAGER	EW	
ENVIRONMENTAL BRANCH	JH	
SAFETY BRANCH	CS	
CM	MMD	
PM	RWP	
CUSTOMER	JWB	
ENG. BRANCH	DGL	

LEVEL-3 FIRE ALARM PLAN SEGMENT B

FA-103b

FLIGHT PROJECTS BUILDING

NATIONAL AERONAUTICS AND SPACE ADMINISTRATION

GODDARD SPACE FLIGHT CENTER GREENBELT, MARYLAND
FACILITIES MANAGEMENT DIVISION

DATE ISSUED	CoF CODE OR WR#	AECOM PROJECT NO.	SCALE
10/12/2012	12GXAZ	60187636	1/8" = 1'-0"

FILE DATE : 10/9/2012 2:06:32 PM

KEYED NOTES:

1. ACTIVATION OF DUCT DETECTOR SHUTS DOWN ASSOCIATED AHU.

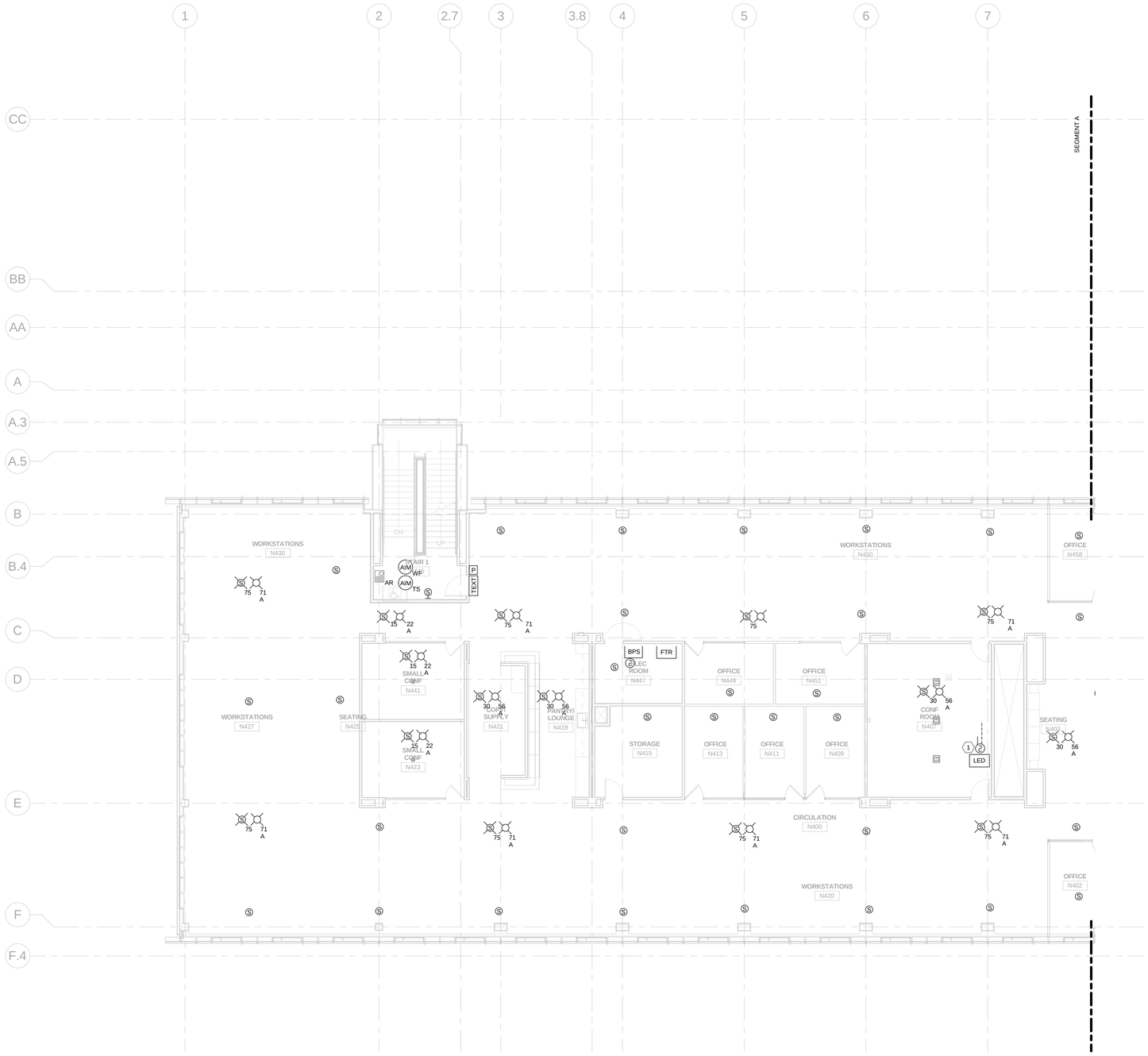

100% SUBMITTAL

NORTH

1/8"=1'-0" 8' 4' 0 8' 16'

AECOM

AECOM TECHNICAL SERVICES, INC.
3101 WILSON BOULEVARD
SUITE 900
ARLINGTON, VA 22201

T: 703-682-4900 F: 703.682.4901
www.aecom.com

SEAL AREA

STATE OF MARYLAND
JOSEPH RAMPONES
No. 20000
PROFESSIONAL ENGINEER

10-12-12

KEY PLAN

SEGMENT - A

REV	DATE	DESCRIPTION	S&R BR.	CUSTOMER	PM	SECT. HEAD

	INITIALS	DATE
DRAWN BY	TGL	
CHECKED BY	FM	
A-E MANAGER	EW	
ENVIRONMENTAL BRANCH	JH	
SAFETY BRANCH	CS	
CM	MMD	
PM	RWP	
CUSTOMER	JWB	
ENG. BRANCH	DGL	

LEVEL-4 FIRE ALARM PLAN SEGMENT A

FA-104a

FLIGHT PROJECTS BUILDING

NATIONAL AERONAUTICS AND SPACE ADMINISTRATION

GODDARD SPACE FLIGHT CENTER GREENBELT, MARYLAND
FACILITIES MANAGEMENT DIVISION

DATE ISSUED	CoF CODE OR WR#	AECOM PROJECT NO.	SCALE
10/12/2012	12GXAZ	60187636	1/8" = 1'-0"

FILE DATE: 10/9/2012 2:06:40 PM

KEYED NOTES:

1. SMOKE DETECTOR AT THIS LOCATION IS FOR ACTUATION OF DOOR CLOSERS ON DOORS TO MAIN LOBBY FROM WING. THIS DETECTOR ALSO PERFORMS FUNCTIONS AS SHOWN ON THE FIRE ALARM MATRIX.
2. ACTUATION OF THIS DUCT DETECTOR:
   1. CLOSES ASSOCIATED SMOKE DAMPER AT SMOKE BARRIER.
   2. SHUTS ASSOCIATED AHU DOWN.
3. ACTIVATION OF DUCT DETECTOR:
   1. SHUTS ASSOCIATED AHU DOWN.
4. ACTUATION OF THIS DUCT DETECTOR:
   1. CLOSES ASSOCIATED SMOKE DAMPER AT SMOKE BARRIER.

100% SUBMITTAL

NORTH

1/8"=1'-0" 8' 4' 0 8' 16'

AECOM

AECOM TECHNICAL SERVICES, INC.
3101 WILSON BOULEVARD
SUITE 900
ARLINGTON, VA 22201

T: 703-682-4900 F: 703.682.4901
www.aecom.com

SEAL AREA

STATE OF MARYLAND
JOSEPH A. FRANCHINO
No. 15000
LICENSED PROFESSIONAL ENGINEER

10-12-12

KEY PLAN

SEGMENT - B

REV	DATE	DESCRIPTION	S&R BR.	CUSTOMER	PM	SECT. HEAD

	INITIALS	DATE
DRAWN BY	TGL	
CHECKED BY	FM	
A-E MANAGER	EW	
ENVIRONMENTAL BRANCH	JH	
SAFETY BRANCH	CS	
CM	MMD	
PM	RWP	
CUSTOMER	JWB	
ENG. BRANCH	DGL	

LEVEL-4 FIRE ALARM PLAN SEGMENT B

FA-104b

FLIGHT PROJECTS BUILDING

NATIONAL AERONAUTICS AND SPACE ADMINISTRATION

GODDARD SPACE FLIGHT CENTER GREENBELT, MARYLAND
FACILITIES MANAGEMENT DIVISION

DATE ISSUED	CoF CODE OR WR#	AECOM PROJECT NO.	SCALE
10/12/2012	12GXAZ	60187636	1/8" = 1'-0"

FILE DATE: 10/9/2012 2:06:50 PM

KEYED NOTES:

1. HEAT DETECTOR, SPEAKER STROBE, AND AMBER STROBE HERE ARE FOR ELEVATOR MACHINE ROOM PARTIAL MEZZANINE LEVEL.
2. ACTIVATION OF SUPPLY SIDE DUCT DETECTOR SHUTS DOWN ASSOCIATED AHU.

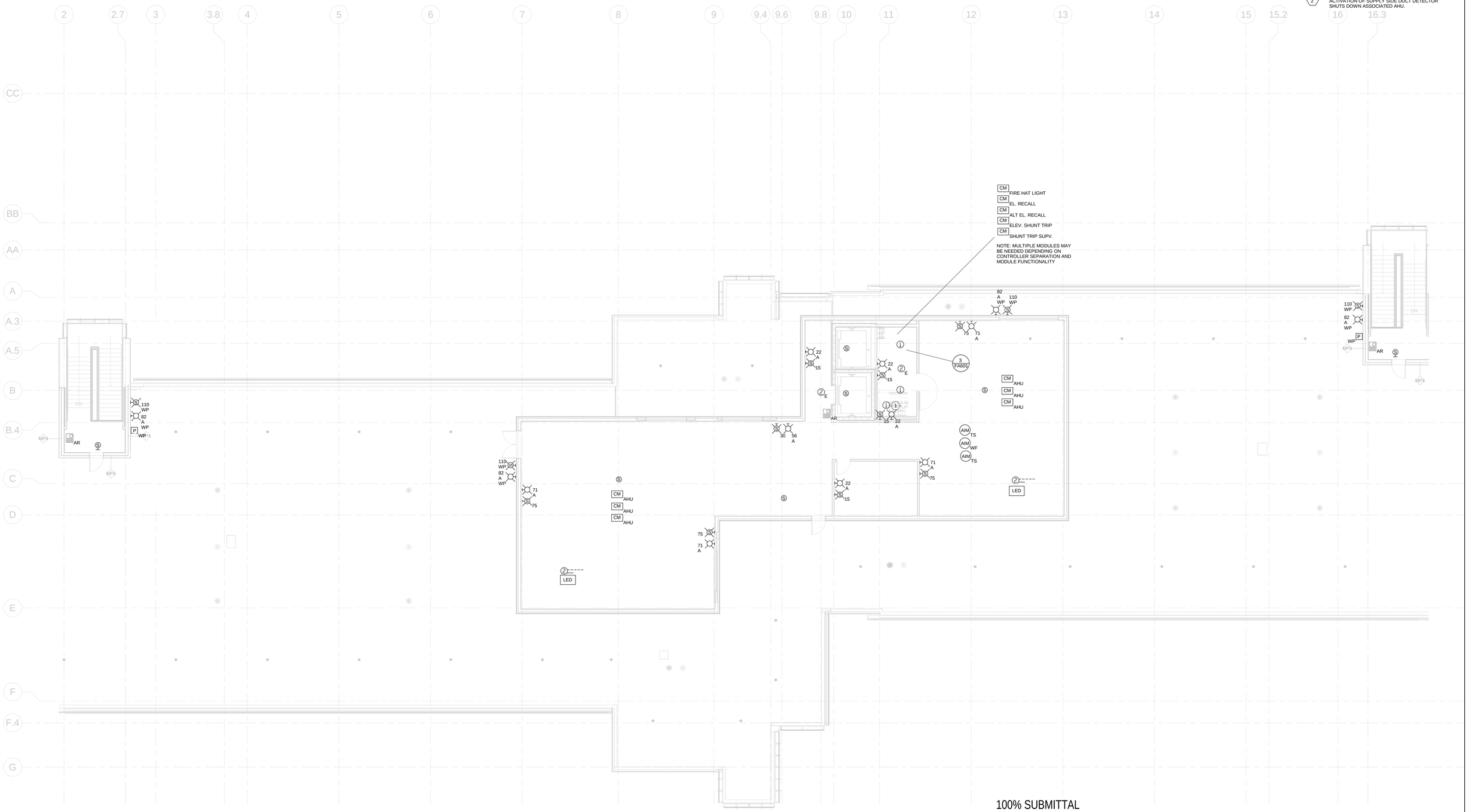

100% SUBMITTAL

NORTH

1/8"=1'-0" 8' 4' 0 8' 16'

AECOM

AECOM TECHNICAL SERVICES, INC.
3101 WILSON BOULEVARD
SUITE 900
ARLINGTON, VA 22201

T: 703-682-4900 F: 703.682.4901
www.aecom.com

SEAL AREA

STATE OF MARYLAND
JOSEPH LAUGHLIN
No. 15-0000
PROFESSIONAL ENGINEER
10-12-12

KEY PLAN

PH

REV	DATE	DESCRIPTION	S&R BR.	CUSTOMER	PM	SECT. HEAD

	INITIALS	DATE
DRAWN BY	TGL	
CHECKED BY	FM	
A-E MANAGER	EW	
ENVIRONMENTAL BRANCH	JH	
SAFETY BRANCH	CS	
CM	MMD	
PM	RWP	
CUSTOMER	JWB	
ENG. BRANCH	DGL	

PENTHOUSE FIRE ALARM PLAN

FA-105

FLIGHT PROJECTS BUILDING

NATIONAL AERONAUTICS AND SPACE ADMINISTRATION

GODDARD SPACE FLIGHT CENTER GREENBELT, MARYLAND
FACILITIES MANAGEMENT DIVISION

DATE ISSUED	CoF CODE OR WR#	AECOM PROJECT NO.	SCALE
10/12/2012	12GXAZ	60187636	1/8" = 1'-0"

FILE DATE: 10/8/2012 3:36:39 PM

ONE DETECTOR REQUIRED WHEN WALL ABOVE DOOR IS LESS THAN 24" ON EITHER SIDE. USE TWO DETECTORS (ONE ON EACH SIDE) WHERE WALL ABOVE DOOR IS GREATER THAN 24" ON BOTH SIDES.

LOCATE DETECTOR ALONG CENTERLINE OF DOUBLE-DOORS.

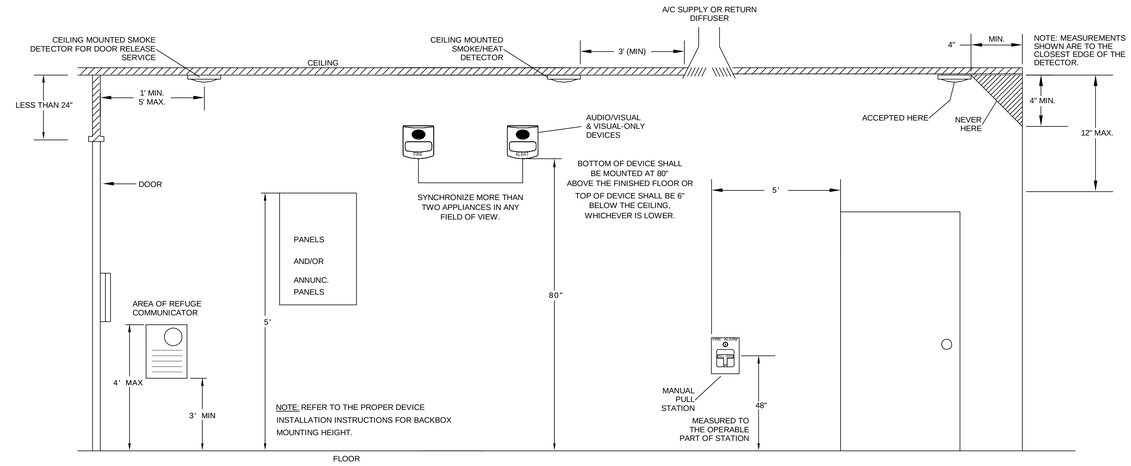

1 FA501 FIRE ALARM - TYPICAL DEVICE MOUNTING DETAIL

100% SUBMITTAL

AECOM

AECOM TECHNICAL SERVICES, INC.
3101 WILSON BOULEVARD
SUITE 900
ARLINGTON, VA 22201

T: 703-682-4900 F: 703.682.4901
www.aecom.com

SEAL AREA

STATE OF MARYLAND
JOSEPH L. GIAMPIETRO
No. 20000
PROFESSIONAL ENGINEER
10-12-12

KEY PLAN

REV	DATE	DESCRIPTION	S&R BR.	CUSTOMER	PM	SECT. HEAD

	INITIALS	DATE
DRAWN BY	TGL	
CHECKED BY	FM	
A-E MANAGER	EW	
ENVIRONMENTAL BRANCH	JH	
SAFETY BRANCH	CS	
CM	MMD	
PM	RWP	
CUSTOMER	JWB	
ENG. BRANCH	DGL	

FIRE ALARM DETAILS

FA-501

FLIGHT PROJECTS BUILDING

NATIONAL AERONAUTICS AND SPACE ADMINISTRATION

GODDARD SPACE FLIGHT CENTER GREENBELT, MARYLAND
FACILITIES MANAGEMENT DIVISION

DATE ISSUED	CoF CODE OR WR#	AECOM PROJECT NO.	SCALE
10/12/2012	12GXAZ	60187636	NTS

FILE DATE: 10/8/2012 3:36:40 PM

FIRE ALARM MATRIX

OUTPUT/ SYSTEM RESPONSE / INPUT	ACTIVATION OF ANY FIRE ALARM MANUAL PULL STATION	ACTIVATION OF ELEVATOR LOBBY SMOKE DETECTOR ON FLOORS 2-5, PH ELEVATOR MACHINE ROOM	RETURN AIR SYSTEM DUCT DETECTOR	ACTIVATION OF 1ST FLOOR ELEVATOR LOBBY SMOKE DETECTOR	ACTIVATION OF ANY FLOOR AREA SPRINKLER SYSTEM WATERFLOW SWITCH	ACTIVATION OF ANY VALVE TAMPER SUPERVISORY SWITCH	ELEVATOR SHUNT - TRIP POWER PROBLEM	POWER SUPPLY PROBLEMS AND AMPLIFIER PROBLEMS (PRIMARY, TROUBLE AND SECONDARY)	OPEN WIRE OR GROUND IN ANY SUPERVISED CIRCUIT	PRE-RECORDED INPUT AT LOC PANEL	ACTIVATION OF MAIN WATER FLOW SWITCH	LIVE MESSAGE INPUT TO LOC	PRE-RECORDED "ALL CLEAR" INPUT TO LOC	NON-EMERGENCY LIVE MESSAGE INPUT TO LOC	ELEVATOR MACHINERY ROOM HEAT DETECTOR	DUCT DETECTOR ON AIR HANDLER SUPPLY UNIT	ACTUATION OF SMOKE DETECTOR AT MAIN LOBBY DOORS	SMOKE DAMPER SMOKE DETECTOR	SHORT CIRCUIT ON ALARM SYSTEM	LIVE VOICE MESSAGE FROM GODDARD ePAS SYSTEM WITHOUT FIRE ALARM SYSTEM OPERATING	SIGNAL FROM GODDARD CAMPUS ePAS SYSTEM WITHOUT FIRE ALARM SYSTEM OPERATING	PRE-RECORDED MESSAGE FROM GODDARD ePAS SYSTEM WITHOUT FIRE ALARM SYSTEM OPERATING	LIVE MESSAGE FROM GODDARD ePAS SYSTEM WITH FIRE ALARM SYSTEM IN OPERATION	PRE-RECORDED MESSAGE FROM GODDARD ePAS SYSTEM WITH FIRE ALARM SYSTEM IN OPERATION	MESSAGE OR SIGNAL FROM ePAS SYSTEM FOR EXTERNAL MNS SYSTEM OPERATIONS ONLY	MESSAGE OR SIGNAL FROM ePAS SYSTEM FOR INTERNAL MNS OPERATION ONLY
ACTIVATE INDOOR CLEAR STROBES AND SPEAKERS ON ALL FLOORS	●	●		●	●										●		●										
INITIATE PRIMARY ELEVATOR RECALL		●																									
INITIATE SECONDARY ELEVATOR RECALL				●																							
SHUTDOWN ASSOCIATED MECHANICAL UNIT			●													●											
SHUNT - TRIP POWER TO THE ELEVATORS															●												
ACTIVATE SYSTEM SUPERVISORY			●			●	●				●					●		●						●	●		
ACTIVATE SYSTEM TROUBLE								●	●										●								
ANNUNCIATE AT THE FACP AND ANNUNCIATOR PANEL	●	●	●	●	●	●	●	●	●		●				●	●	●	●	●								
RECORD EVENTS IN THE SYSTEM MEMORY	●	●	●	●	●	●	●	●	●		●				●	●	●	●	●	●				●	●		
ACTIVATE THE DACT SIGNAL TO NASA CENTER	●	●	●	●	●	●	●	●	●		●				●	●	●	●	●	●				●	●		
ACTIVATE AMBER STROBES INSIDE BUILDING										●		●	●	●						●	●	●	●	●			●
LIVE MESSAGE TO BUILDING												●		●						●			●				●
CLOSE MAIN LOBBY SMOKE DOORS THROUGHOUT FLOOR OF ACTUATED DETECTOR	●	●		●	●												●										
CLOSE ALL SMOKE DAMPERS AT SMOKE BARRIER WALLS ON FLOORS 1-4																	●	●									
SYSTEM ALARM	●	●		●	●										●		●										
DISABLE FIRE ALARM NOTIFICATION APPLIANCES																								●	●		
ACTUATE TEXT SIGNS "EVACUATE"	●	●		●	●										●		●										
ACTUATE TEXT SIGNS "ANNOUNCEMENT"										●		●	●	●						●	●	●	●	●			●
PRE-RECORDED ANNOUNCEMENT MESSAGE TO BUILDING													●									●					
ACTIVATE EXTERIOR SPEAKERS																										●	
ACTIVATE EXTERIOR AMBER STROBES																										●	

5 FA601 FIRE ALARM MATRIX

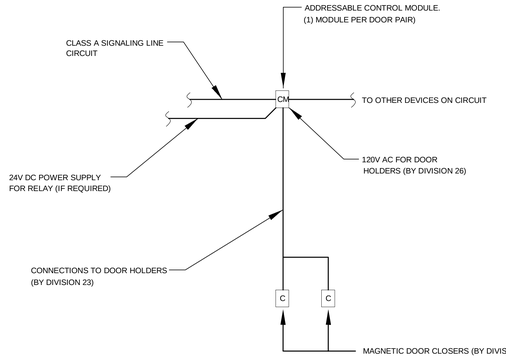

4 FA601 SCHEMATIC OF FIRE ALARM DOOR CLOSER INTERFACE

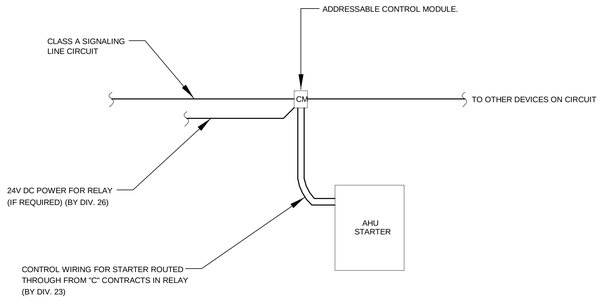

2 FA601 F.A. SYSTEM-AHU INTERFACE

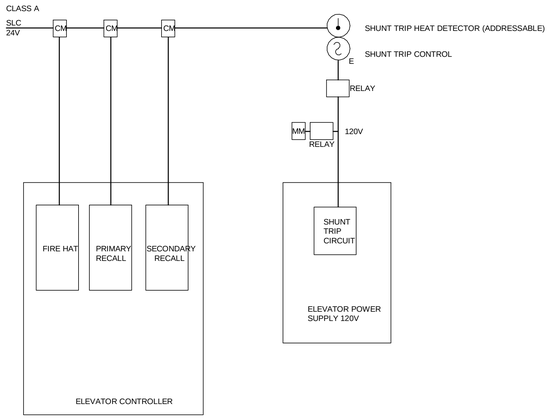

NOTE:

NUMBERS OF CONTROL MODULES AND RELAYS ARE SHOWN PER CONTROLLER, FOR CLARITY. DEPENDING ON SPACE SEPARATION BETWEEN CONTROLLERS, AND MODULE FUNCTIONALITY, IT MAY BE PRACTICAL TO PROVIDE MODULES TO CONTROL MULTIPLE CAB ELEVATOR CONTROLLERS. COORDINATE FINAL DESIGN WITH CONTRACTOR.

3 FA601 F.A. SYSTEM-ELEVATOR INTERFACE

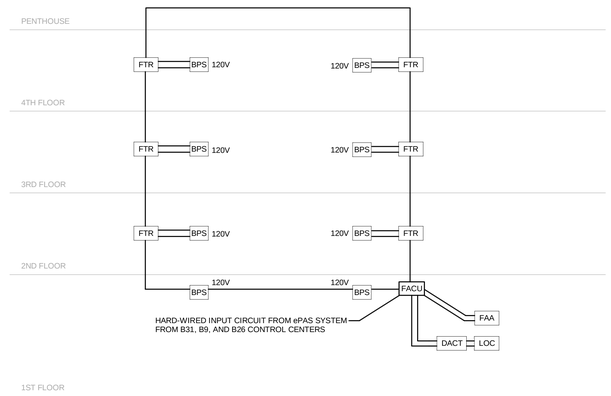

THE CONNECTION TO THE CAMPUS FIRE ALARM NETWORK AND OWS IN BUILDING 31 IS VIA TWO REDUNDANT FIBER OPTIC CIRCUITS TO A NEARBY, EXISTING BUILDING AND WILL REQUIRE MODIFICATION TO THE EXISTING NETWORK AT THIS POINT.

1 FA601 FIRE ALARM - RISER DIAGRAM

100% SUBMITTAL

AECOM

AECOM TECHNICAL SERVICES, INC.
3101 WILSON BOULEVARD
SUITE 900
ARLINGTON, VA 22201

T: 703-682-4900 F: 703.682.4901
www.aecom.com

SEAL AREA

STATE OF MARYLAND REGISTERED PROFESSIONAL ENGINEER

10-12-12

KEY PLAN

REV	DATE	DESCRIPTION	S&R BR.	CUSTOMER	PM	SECT. HEAD

	INITIALS	DATE
DRAWN BY	TGL	
CHECKED BY	FM	
A-E MANAGER	EW	
ENVIRONMENTAL BRANCH	JH	
SAFETY BRANCH	CS	
CM	MMD	
PM	RWP	
CUSTOMER	JWB	
ENG. BRANCH	DGL	

FIRE ALARM DIAGRAMS

FA-601

FLIGHT PROJECTS BUILDING

NATIONAL AERONAUTICS AND SPACE ADMINISTRATION

GODDARD SPACE FLIGHT CENTER GREENBELT, MARYLAND
FACILITIES MANAGEMENT DIVISION

DATE ISSUED	CoF CODE OR WR#	AECOM PROJECT NO.	SCALE
10/12/2012	12GXAZ	60187636	NTS

FILE DATE: 10/8/2012 3:36:42 PM

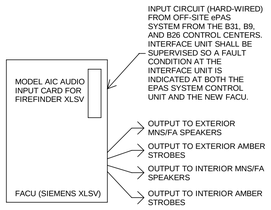

4 FA602 INTERFACE TO FA/MNS CONTROL PANEL FROM EXISTING GODDARD CAMPUS ePAS SYSTEM FOR MNS INPUTS FROM CAMPUS SYSTEM

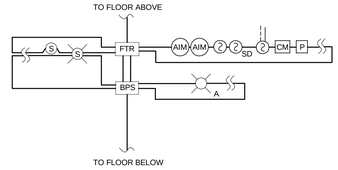

2 FA602 TYPICAL FIRE ALARM CIRCUIT LAYOUT (PER FLOOR SECTION)

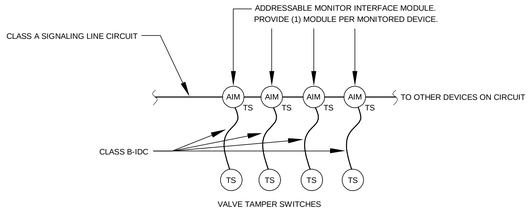

3 FA602 SCHEMATIC OF FIRE ALARM-TAMPER SWITCH INTERFACES

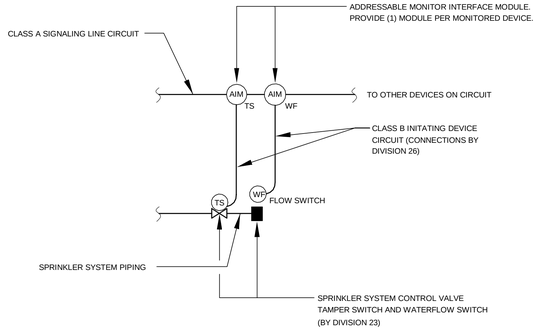

1 FA602 SCHEMATIC OF FIRE ALARM-SPRINKLER SYSTEM INTERFACE

100% SUBMITTAL

AECOM
AECOM TECHNICAL SERVICES, INC.
3101 WILSON BOULEVARD
SUITE 900
ARLINGTON, VA 22201
T: 703-682-4900 F: 703.682.4901
www.aecom.com

SEAL AREA

STATE OF MARYLAND
JOSEPH T. GIORDANO
No. 15000
PROFESSIONAL ENGINEER
10-12-12

KEY PLAN

REV	DATE	DESCRIPTION	S&R BR.	CUSTOMER	PM	SECT. HEAD

	INITIALS	DATE
DRAWN BY	TGL	
CHECKED BY	FM	
A-E MANAGER	EW	
ENVIRONMENTAL BRANCH	JH	
SAFETY BRANCH	CS	
CM	MMD	
PM	RWP	
CUSTOMER	JWB	
ENG. BRANCH	DGL	

FIRE ALARM DIAGRAMS

FA-602

FLIGHT PROJECTS BUILDING

NATIONAL AERONAUTICS AND SPACE ADMINISTRATION
GODDARD SPACE FLIGHT CENTER GREENBELT, MARYLAND
FACILITIES MANAGEMENT DIVISION

DATE ISSUED	CoF CODE OR WR#	AECOM PROJECT NO.	SCALE
10/12/2012	12GXAZ	60187636	NTS

FILE DATE: 10/8/2012 3:36:43 PM

GENERAL NOTES:

1. COORDINATE WITH ARCHITECTURAL ELEVATIONS FOR EXACT MOUNTING LOCATIONS.

KEY NOTES:

1. (4) 4" CONDUITS.
2. (2) 4" CONDUITS.
3. NOT USED.
4. NOT USED.
5. PROVIDE (1) DUAL TELEPHONE OUTLET (FLOOR MOUNTED) & (1) DUAL DATA OUTLET (FLOOR MOUNTED) AT EACH LOCATION U.O.N. PROVIDE (2) 1-1/4" CONDUIT TO 6" ABOVE CEILING (AIM CONDUIT TOWARD NEAREST IT ROOM) WITH A 4" J-BOX FOR EACH OUTLET SHOWN.

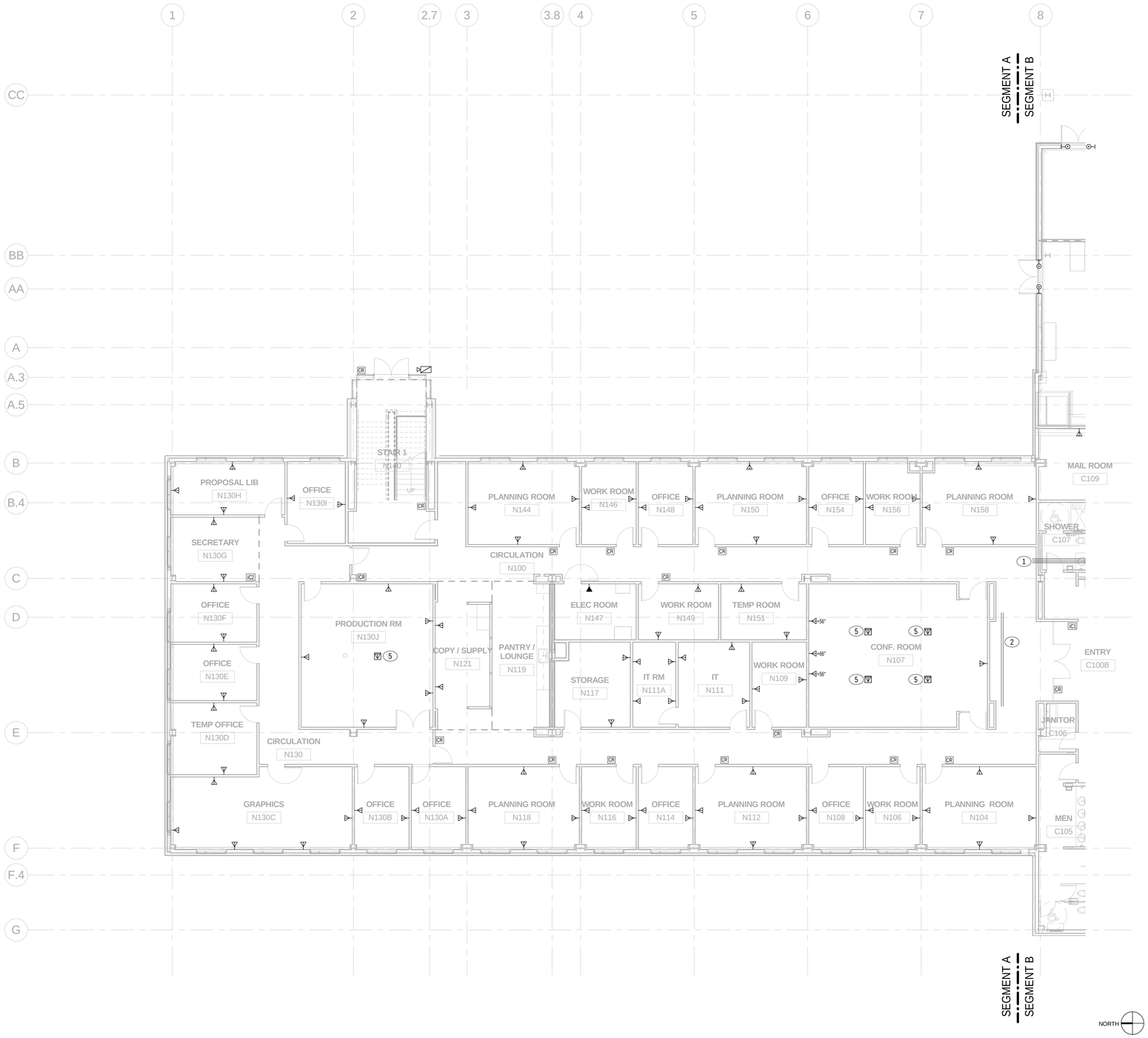

100% SUBMITTAL

AECOM

AECOM TECHNICAL SERVICES, INC.
3101 WILSON BOULEVARD
SUITE 900
ARLINGTON, VA 22201

T: 703-682-4900 F: 703.682.4901
www.aecom.com

SEAL AREA

STATE OF MARYLAND
JIEEB PAN
No. 40968
PROFESSIONAL ENGINEER
10-11-2012

KEY PLAN

SEGMENT - A

REV	DATE	DESCRIPTION	S&R BR.	CUSTOMER	PM	SECT. HEAD

	INITIALS	DATE
DRAWN BY	LB/BF	
CHECKED BY	JR/MM	
A-E MANAGER	EW	
ENVIRONMENTAL BRANCH	JH	
SAFETY BRANCH	CS	
CM	MMD	
PM	RWP	
CUSTOMER	JWB	
ENG. BRANCH	DGL	

LEVEL-1 ELECTRICAL TELECOMM. PLAN SEGMENT A

T-101a

FLIGHT PROJECTS BUILDING

NATIONAL AERONAUTICS AND SPACE ADMINISTRATION

GODDARD SPACE FLIGHT CENTER GREENBELT, MARYLAND
FACILITIES MANAGEMENT DIVISION

DATE ISSUED	CoF CODE OR WR#	AECOM PROJECT NO.	SCALE
10/12/2012	12GXAZ	60187636	1/8" = 1'-0"

FILE DATE: 10/11/2012 2:15:31 PM

GENERAL NOTES:

1. COORDINATE WITH ARCHITECTURAL ELEVATIONS FOR EXACT MOUNTING LOCATIONS.

KEY NOTES:

1. (4) 4" CONDUITS.
2. (2) 4" CONDUITS.
3. (4) 4" CONDUITS TO 2ND FLOOR TELECOM ROOM.
4. GROUNDING BUS BAR.
5. PROVIDE (1) DUAL TELEPHONE OUTLET (FLOOR MOUNTED) & (1) DUAL DATA OUTLET (FLOOR MOUNTED) AT EACH LOCATION U.O.N. PROVIDE (2) 1-1/4" CONDUIT TO 6" ABOVE CEILING (AIM CONDUIT TOWARD NEAREST IT ROOM) WITH A 4" J-BOX FOR EACH OUTLET SHOWN.
6. PROVIDE (1) QUAD TELEPHONE OUTLET & (1) QUAD DATA OUTLET AT EACH LOCATION. PROVIDE (1) 1-1/4" CONDUIT TO 6" ABOVE CEILING SPACE (AIM CONDUIT TOWARD NEAREST IT ROOM) WITH A 4" J-BOX FOR EACH OUTLET SHOWN.
7. CABLE TRAY: DEPTH 4", WIDTH 18", 9" RUNG SPACING.
8. PROVIDE (2) DATA OUTLETS MOUNTED AT 52" AND 70.5" AFF. COORDINATE FINAL LOCATION WITH ARCHITECTURE DRAWINGS AND ELEVATIONS.

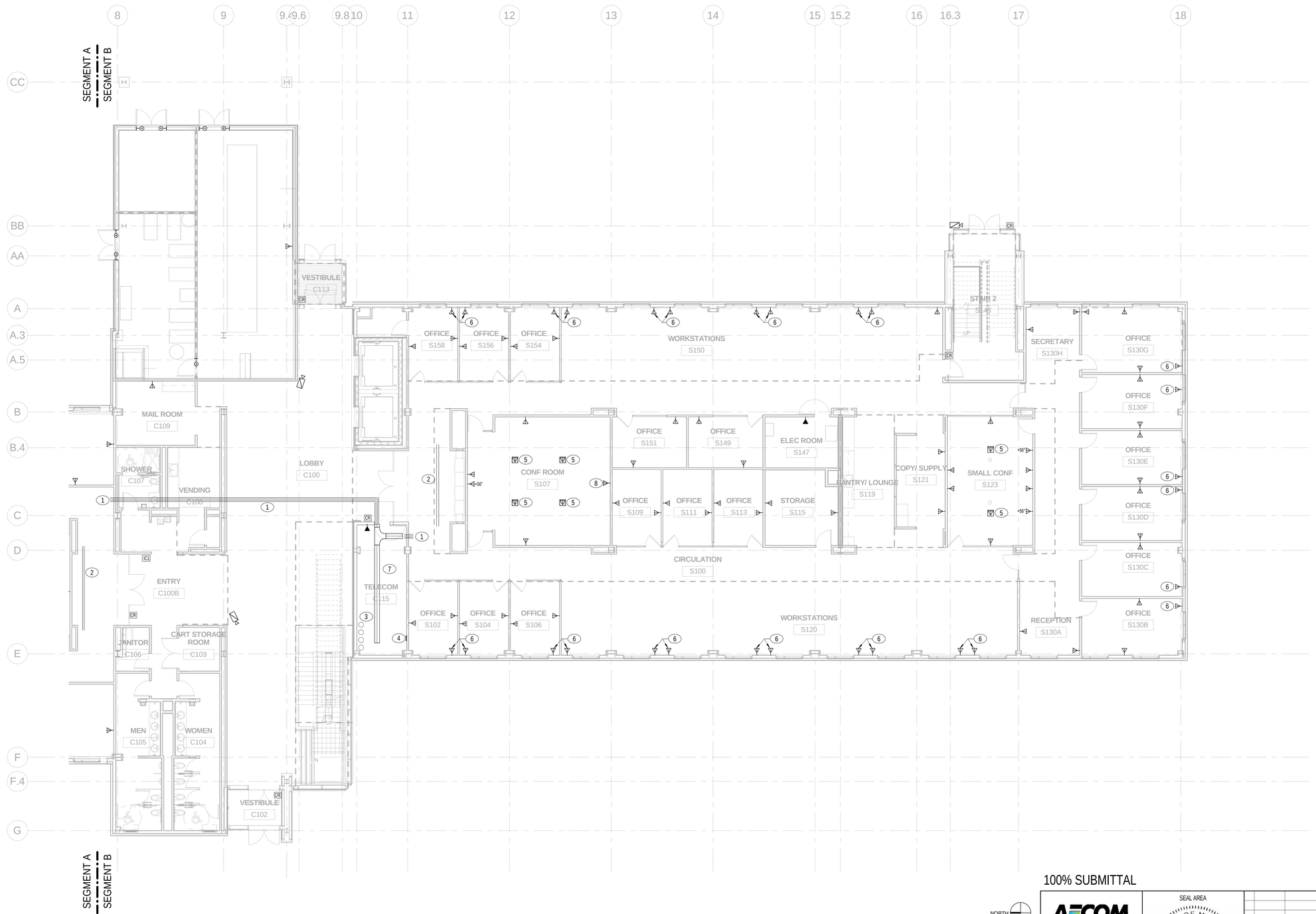

100% SUBMITTAL

NORTH

1/8"=1'-0" 8' 4' 0 8' 16'

AECOM

AECOM TECHNICAL SERVICES, INC.
3101 WILSON BOULEVARD
SUITE 900
ARLINGTON, VA 22201

T: 703-682-4900 F: 703.682.4901
www.aecom.com

SEAL AREA

STATE OF MARYLAND
JEEB BIN
10-11-2012
NO. 40964
PROFESSIONAL ENGINEER

KEY PLAN

SEGMENT - B

REV	DATE	DESCRIPTION	S&R BR.	CUSTOMER	PM	SECT. HEAD

	INITIALS	DATE
DRAWN BY	LB/BF	
CHECKED BY	JR/MM	
A-E MANAGER	EW	
ENVIRONMENTAL BRANCH	JH	
SAFETY BRANCH	CS	
CM	MMD	
PM	RWP	
CUSTOMER	JWB	
ENG. BRANCH	DGL	

LEVEL-1 ELECTRICAL TELECOMM. PLAN SEGMENT B

T-101b

FLIGHT PROJECTS BUILDING

NATIONAL AERONAUTICS AND SPACE ADMINISTRATION

GODDARD SPACE FLIGHT CENTER GREENBELT, MARYLAND
FACILITIES MANAGEMENT DIVISION

DATE ISSUED	CoF CODE OR WR#	AECOM PROJECT NO.	SCALE
10/12/2012	12GXAZ	60187636	1/8" = 1'-0"

FILE DATE: 10/11/2012 2:15:34 PM

GENERAL NOTES:

1. COORDINATE WITH ARCHITECTURAL ELEVATIONS FOR EXACT MOUNTING LOCATIONS.

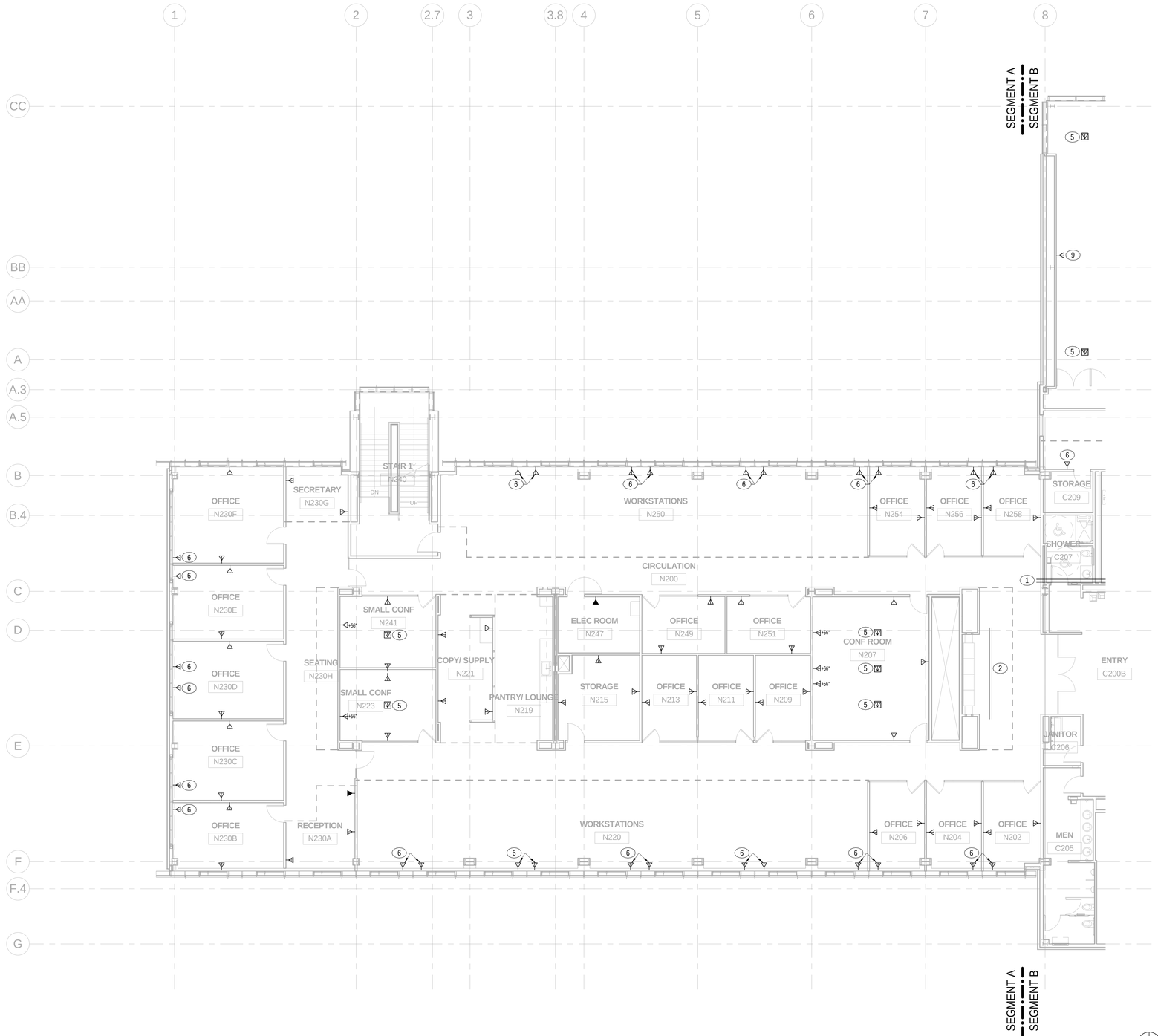

KEY NOTES:

1. (4) 4" CONDUITS.
2. (2) 4" CONDUITS.
3. NOT USED.
4. NOT USED.
5. PROVIDE (1) DUAL TELEPHONE OUTLET (FLOOR MOUNTED) & (1) DUAL DATA OUTLET (FLOOR MOUNTED) AT EACH LOCATION U.O.N. PROVIDE (2) 1-1/4" CONDUIT TO 6" ABOVE CEILING (AIM CONDUIT TOWARD NEAREST IT ROOM) WITH A 4" J-BOX FOR EACH OUTLET SHOWN.
6. PROVIDE (1) QUAD TELEPHONE OUTLET & (1) QUAD DATA OUTLET AT EACH LOCATION. PROVIDE (1) 1-1/4" CONDUIT TO 6" ABOVE CEILING SPACE (AIM CONDUIT TOWARD NEAREST IT ROOM) WITH A 4" J-BOX FOR EACH OUTLET SHOWN.
7. NOT USED.
8. NOT USED.
9. PROVIDE (2) DATA OUTLETS MOUNTED AT 66" AND 76" AFF. COORDINATE FINAL LOCATION WITH ARCHITECTURE DRAWINGS AND ELEVATIONS.

100% SUBMITTAL

AECOM

AECOM TECHNICAL SERVICES, INC.
3101 WILSON BOULEVARD
SUITE 900
ARLINGTON, VA 22201

T: 703-682-4900 F: 703.682.4901
www.aecom.com

SEAL AREA

STATE OF MARYLAND
JEEB-BIN
10-11-2012
NO. 40964
PROFESSIONAL ENGINEER

KEY PLAN

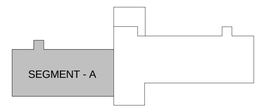

REV	DATE	DESCRIPTION	S&R BR.	CUSTOMER	PM	SECT. HEAD

	INITIALS	DATE
DRAWN BY	LB/BF	
CHECKED BY	JR/MM	
A-E MANAGER	EW	
ENVIRONMENTAL BRANCH	JH	
SAFETY BRANCH	CS	
CM	MMD	
PM	RWP	
CUSTOMER	JWB	
ENG. BRANCH	DGL	

LEVEL-2 ELECTRICAL TELECOMM. PLAN SEGMENT A

T-102a

FLIGHT PROJECTS BUILDING

NATIONAL AERONAUTICS AND SPACE ADMINISTRATION

GODDARD SPACE FLIGHT CENTER GREENBELT, MARYLAND
FACILITIES MANAGEMENT DIVISION

DATE ISSUED	CoF CODE OR WR#	AECOM PROJECT NO.	SCALE
10/12/2012	12GXAZ	60187636	1/8" = 1'-0"

FILE DATE: 10/11/2012 2:15:37 PM

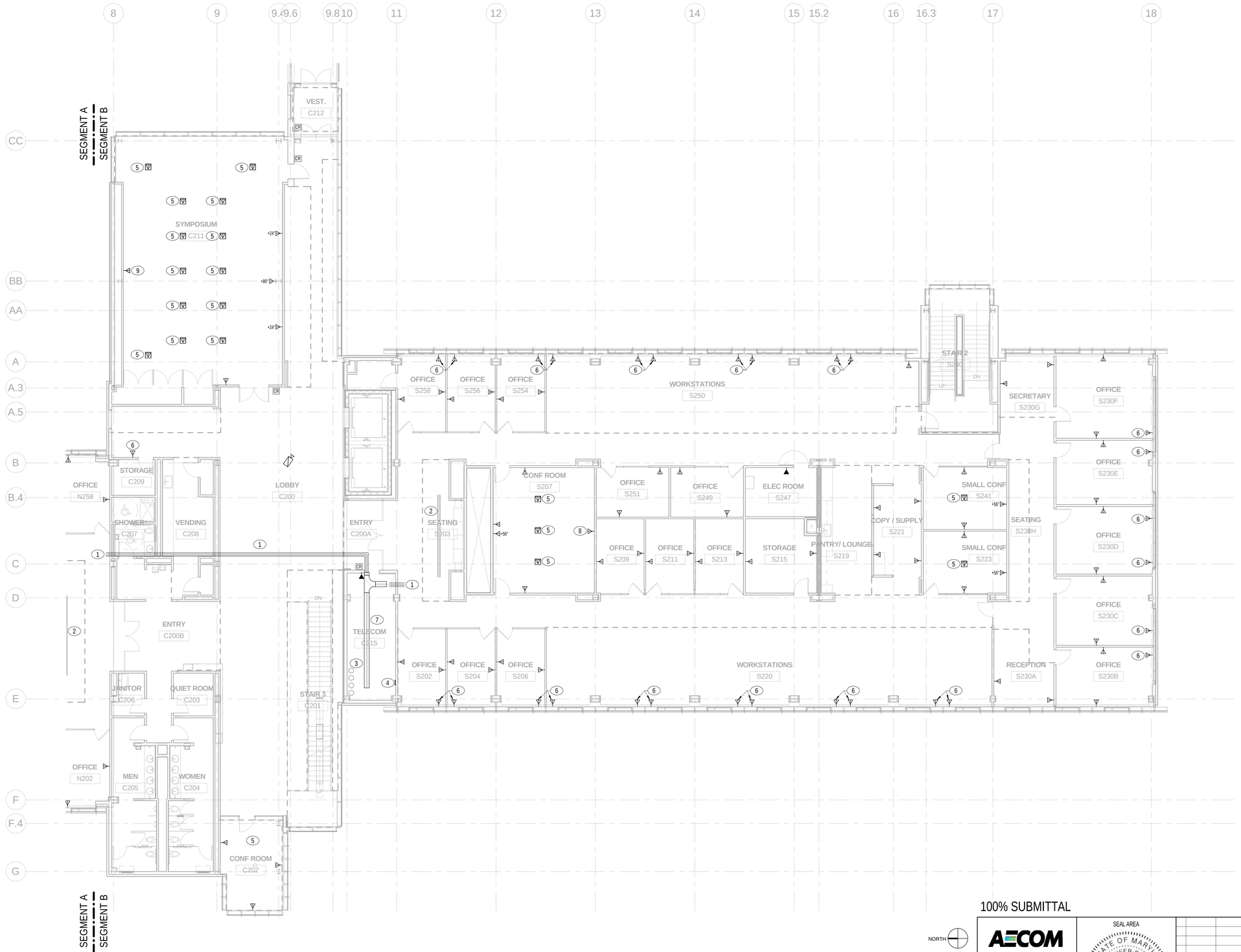

GENERAL NOTES:

1. COORDINATE WITH ARCHITECTURAL ELEVATIONS FOR EXACT MOUNTING LOCATIONS.

KEY NOTES:

1. (4) 4" CONDUITS.
2. (2) 4" CONDUITS.
3. (4) 4" CONDUITS TO 2ND FLOOR TELECOM ROOM.
4. GROUNDING BUS BAR.
5. PROVIDE (1) DUAL TELEPHONE OUTLET (FLOOR MOUNTED) & (1) DUAL DATA OUTLET (FLOOR MOUNTED) AT EACH LOCATION U.O.N. PROVIDE (2) 1-1/4" CONDUIT TO 6" ABOVE CEILING (AIM CONDUIT TOWARD NEAREST IT ROOM) WITH A 4" J-BOX FOR EACH OUTLET SHOWN.
6. PROVIDE (1) QUAD TELEPHONE OUTLET & (1) QUAD DATA OUTLET AT EACH LOCATION. PROVIDE (1) 1-1/4" CONDUIT TO 6" ABOVE CEILING SPACE (AIM CONDUIT TOWARD NEAREST IT ROOM) WITH A 4" J-BOX FOR EACH OUTLET SHOWN.
7. CABLE TRAY: DEPTH 4", WIDTH 18", 9" RUNG SPACING.
8. PROVIDE (2) DATA OUTLETS MOUNTED AT 52" AND 70.5" AFF. COORDINATE FINAL LOCATION WITH ARCHITECTURE DRAWINGS AND ELEVATIONS.
9. PROVIDE (2) DATA OUTLETS MOUNTED AT 66" AND 76" AFF. COORDINATE FINAL LOCATION WITH ARCHITECTURE DRAWINGS AND ELEVATIONS.

100% SUBMITTAL

AECOM
AECOM TECHNICAL SERVICES, INC.
3101 WILSON BOULEVARD
SUITE 900
ARLINGTON, VA 22201
T: 703-682-4900 F: 703.682.4901
www.aecom.com

SEAL AREA

STATE OF MARYLAND
JEEBEN
No. 40961
PROFESSIONAL ENGINEER
10-11-2012

KEY PLAN

SEGMENT - B

REV	DATE	DESCRIPTION	S&R BR.	CUSTOMER	PM	SECT. HEAD

	INITIALS	DATE
DRAWN BY	LB/BF	
CHECKED BY	JR/MM	
A-E MANAGER	EW	
ENVIRONMENTAL BRANCH	JH	
SAFETY BRANCH	CS	
CM	MMD	
PM	RWP	
CUSTOMER	JWB	
ENG. BRANCH	DGL	

LEVEL-2 ELECTRICAL TELECOMM. PLAN SEGMENT B

T-102b

FLIGHT PROJECTS BUILDING

NATIONAL AERONAUTICS AND SPACE ADMINISTRATION

GODDARD SPACE FLIGHT CENTER GREENBELT, MARYLAND
FACILITIES MANAGEMENT DIVISION

DATE ISSUED	CoF CODE OR WRF	AECOM PROJECT NO.	SCALE
10/12/2012	12GXAZ	60187636	1/8" = 1'-0"

FILE DATE: 10/11/2012 2:15:40 PM

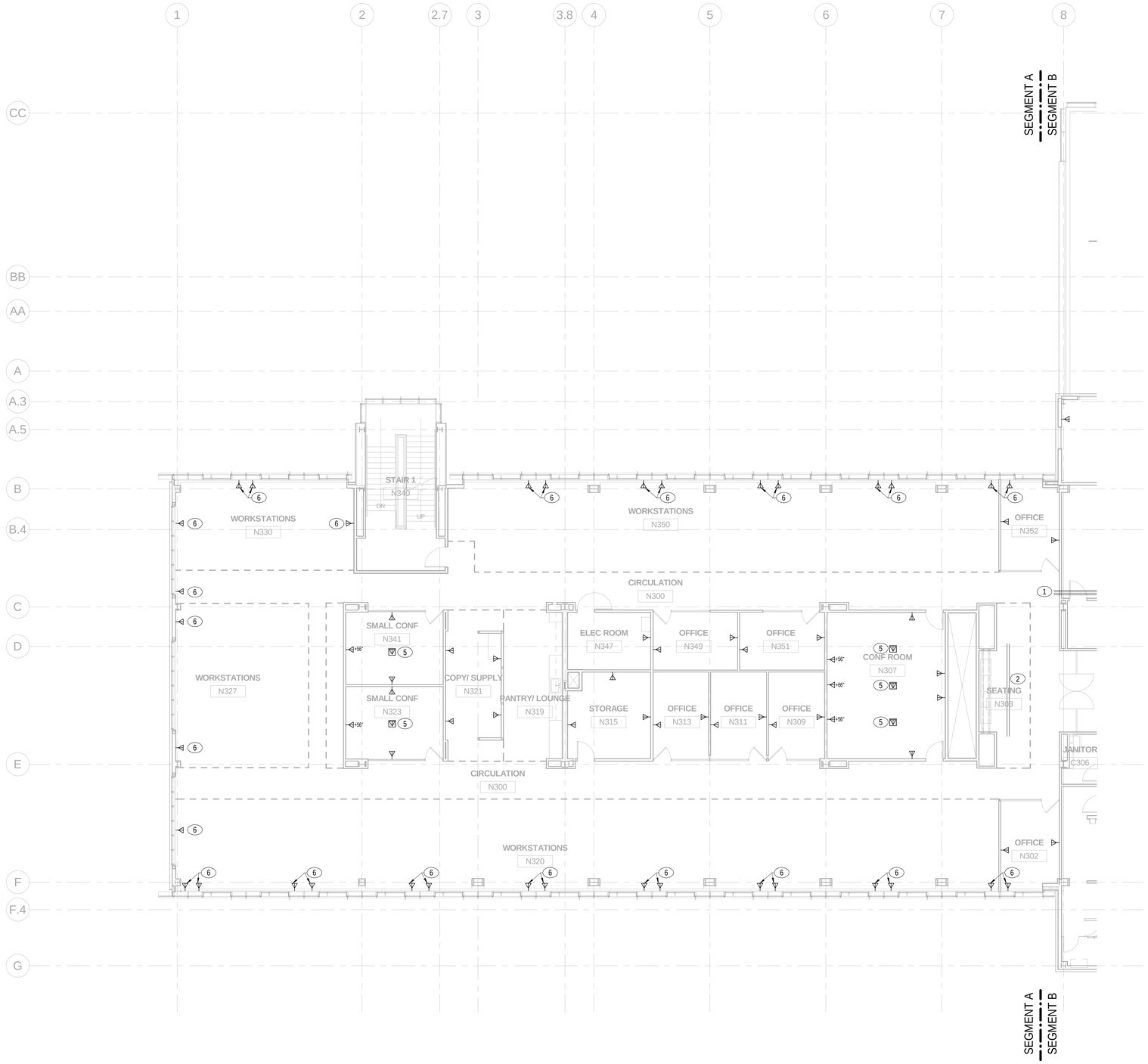

GENERAL NOTES:

1. COORDINATE WITH ARCHITECTURAL ELEVATIONS FOR EXACT MOUNTING LOCATIONS.

KEY NOTES:

1. (4) 4" CONDUITS.
2. (2) 4" CONDUITS.
3. NOT USED.
4. NOT USED.
5. PROVIDE (1) DUAL TELEPHONE OUTLET (FLOOR MOUNTED) & (1) DUAL DATA OUTLET (FLOOR MOUNTED) AT EACH LOCATION U.O.N. PROVIDE (2) 1-1/4" CONDUIT TO 6" ABOVE CEILING (AIM CONDUIT TOWARD NEAREST IT ROOM) WITH A 4" J-BOX FOR EACH OUTLET SHOWN.
6. PROVIDE (1) QUAD TELEPHONE OUTLET & (1) QUAD DATA OUTLET AT EACH LOCATION. PROVIDE (1) 1-1/4" CONDUIT TO 6" ABOVE CEILING SPACE (AIM CONDUIT TOWARD NEAREST IT ROOM) WITH A 4" J-BOX FOR EACH OUTLET SHOWN.

100% SUBMITTAL

NORTH

1/8"=1'-0" 8' 4' 0 8' 16'

AECOM

AECOM TECHNICAL SERVICES, INC.
3101 WILSON BOULEVARD
SUITE 900
ARLINGTON, VA 22201

T: 703-682-4900 F: 703.682.4901
www.aecom.com

SEAL AREA

STATE OF MARYLAND
JIEEB REN
10-11-2012
No. 40961
PROFESSIONAL ENGINEER

KEY PLAN

SEGMENT - A

REV	DATE	DESCRIPTION	S&R BR.	CUSTOMER	PM	SECT. HEAD

	INITIALS	DATE
DRAWN BY	LB/BF	
CHECKED BY	JR/MM	
A-E MANAGER	EW	
ENVIRONMENTAL BRANCH	JH	
SAFETY BRANCH	CS	
CM	MMD	
PM	RWP	
CUSTOMER	JWB	
ENG. BRANCH	DGL	

LEVEL-3 ELECTRICAL TELECOMM. PLAN SEGMENT A

T-103a

FLIGHT PROJECTS BUILDING

NATIONAL AERONAUTICS AND SPACE ADMINISTRATION

GODDARD SPACE FLIGHT CENTER GREENBELT, MARYLAND
FACILITIES MANAGEMENT DIVISION

DATE ISSUED	CoF CODE OR WR#	AECOM PROJECT NO.	SCALE
10/12/2012	12GXAZ	60187636	1/8" = 1'-0"

FILE DATE: 10/11/2012 2:15:42 PM

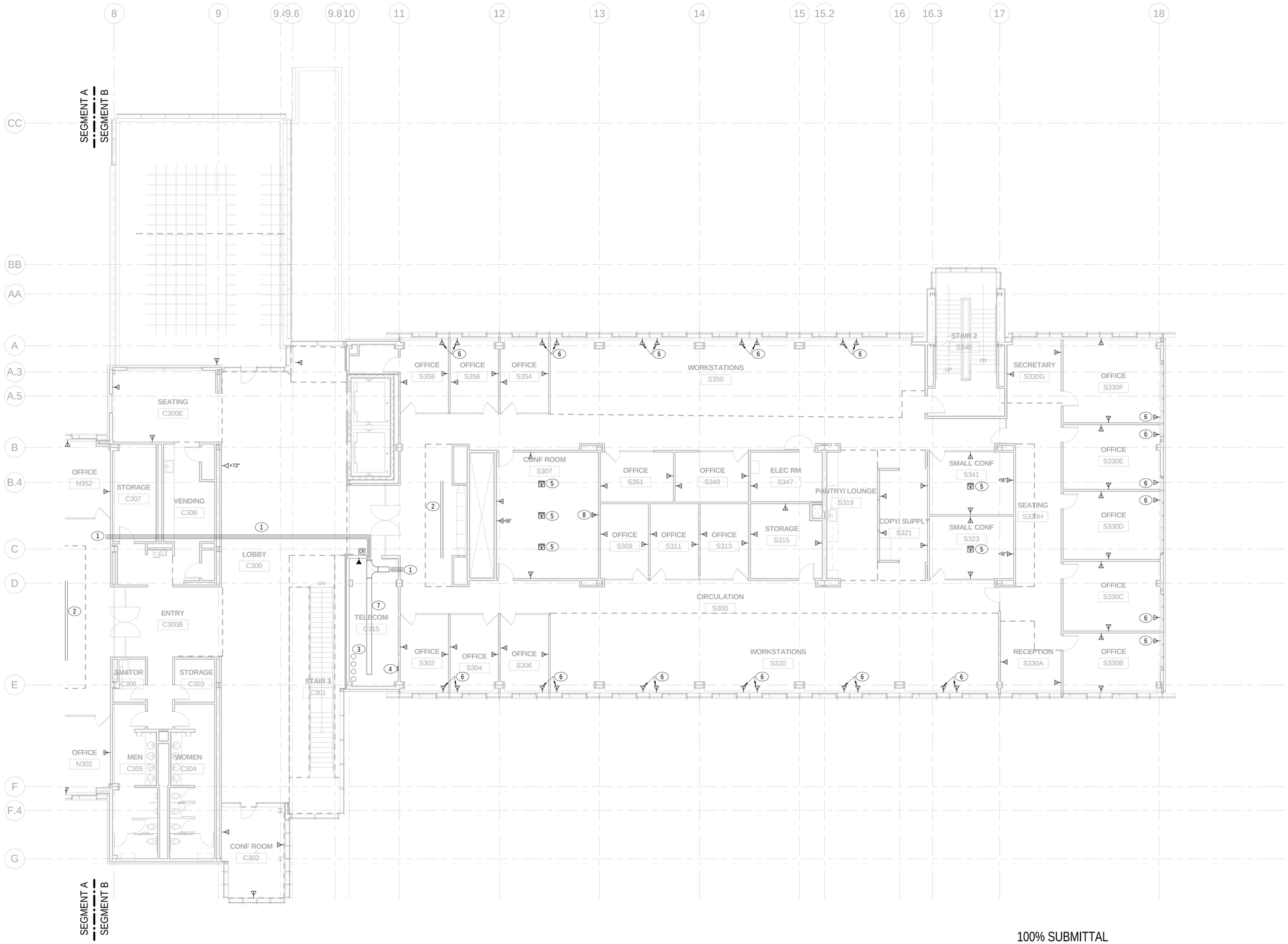

GENERAL NOTES:

1. COORDINATE WITH ARCHITECTURAL ELEVATIONS FOR EXACT MOUNTING LOCATIONS.

KEY NOTES:

1. (4) 4" CONDUITS.
2. (2) 4" CONDUITS.
3. (4) 4" CONDUITS TO 2ND FLOOR TELECOM ROOM.
4. GROUNDING BUS BAR.
5. PROVIDE (1) DUAL TELEPHONE OUTLET (FLOOR MOUNTED) & (1) DUAL DATA OUTLET (FLOOR MOUNTED) AT EACH LOCATION U.O.N. PROVIDE (2) 1-1/4" CONDUIT TO 6" ABOVE CEILING (AIM CONDUIT TOWARD NEAREST IT ROOM) WITH A 4" J-BOX FOR EACH OUTLET SHOWN.
6. PROVIDE (1) QUAD TELEPHONE OUTLET & (1) QUAD DATA OUTLET AT EACH LOCATION. PROVIDE (1) 1-1/4" CONDUIT TO 6" ABOVE CEILING SPACE (AIM CONDUIT TOWARD NEAREST IT ROOM) WITH A 4" J-BOX FOR EACH OUTLET SHOWN.
7. CABLE TRAY: DEPTH 4", WIDTH 18", 9" RUNG SPACING.
8. PROVIDE (2) DATA OUTLETS MOUNTED AT 52" AND 70.5" AFF. COORDINATE FINAL LOCATION WITH ARCHITECTURE DRAWINGS AND ELEVATIONS.

100% SUBMITTAL

NORTH

1/8"=1'-0" 8' 4' 0 8' 16'

AECOM
AECOM TECHNICAL SERVICES, INC.
3101 WILSON BOULEVARD
SUITE 900
ARLINGTON, VA 22201
T: 703-682-4900 F: 703.682.4901
www.aecom.com

SEAL AREA

STATE OF MARYLAND
JEFFREY BRIAN WEBB
No. 40964
PROFESSIONAL ENGINEER
10-12-2012

KEY PLAN

SEGMENT - B

REV	DATE	DESCRIPTION	S&R BR.	CUSTOMER	PM	SECT. HEAD

	INITIALS	DATE
DRAWN BY	LB/BF	
CHECKED BY	JR/MM	
A-E MANAGER	EW	
ENVIRONMENTAL BRANCH	JH	
SAFETY BRANCH	CS	
CM	MMD	
PM	RWP	
CUSTOMER	JWB	
ENG. BRANCH	DGL	

LEVEL-3 ELECTRICAL TELECOMM. PLAN SEGMENT B

T-103b

FLIGHT PROJECTS BUILDING

NATIONAL AERONAUTICS AND SPACE ADMINISTRATION

GODDARD SPACE FLIGHT CENTER GREENBELT, MARYLAND
FACILITIES MANAGEMENT DIVISION

DATE ISSUED	CoF CODE OR WR#	AECOM PROJECT NO.	SCALE
10/12/2012	12GXAZ	60187636	1/8" = 1'-0"

FILE DATE: 10/11/2012 2:15:46 PM

GENERAL NOTES:

1. COORDINATE WITH ARCHITECTURAL ELEVATIONS FOR EXACT MOUNTING LOCATIONS.

KEY NOTES:

1. (4) 4" CONDUITS.
2. (2) 4" CONDUITS.
3. NOT USED.
4. NOT USED.
5. PROVIDE (1) DUAL TELEPHONE OUTLET (FLOOR MOUNTED) & (1) DUAL DATA OUTLET (FLOOR MOUNTED) AT EACH LOCATION U.O.N. PROVIDE (2) 1-1/4" CONDUIT TO 6" ABOVE CEILING (AIM CONDUIT TOWARD NEAREST IT ROOM) WITH A 4" J-BOX FOR EACH OUTLET SHOWN.
6. PROVIDE (1) QUAD TELEPHONE OUTLET & (1) QUAD DATA OUTLET AT EACH LOCATION. PROVIDE (1) 1-1/4" CONDUIT TO 6" ABOVE CEILING SPACE (AIM CONDUIT TOWARD NEAREST IT ROOM) WITH A 4" J-BOX FOR EACH OUTLET SHOWN.

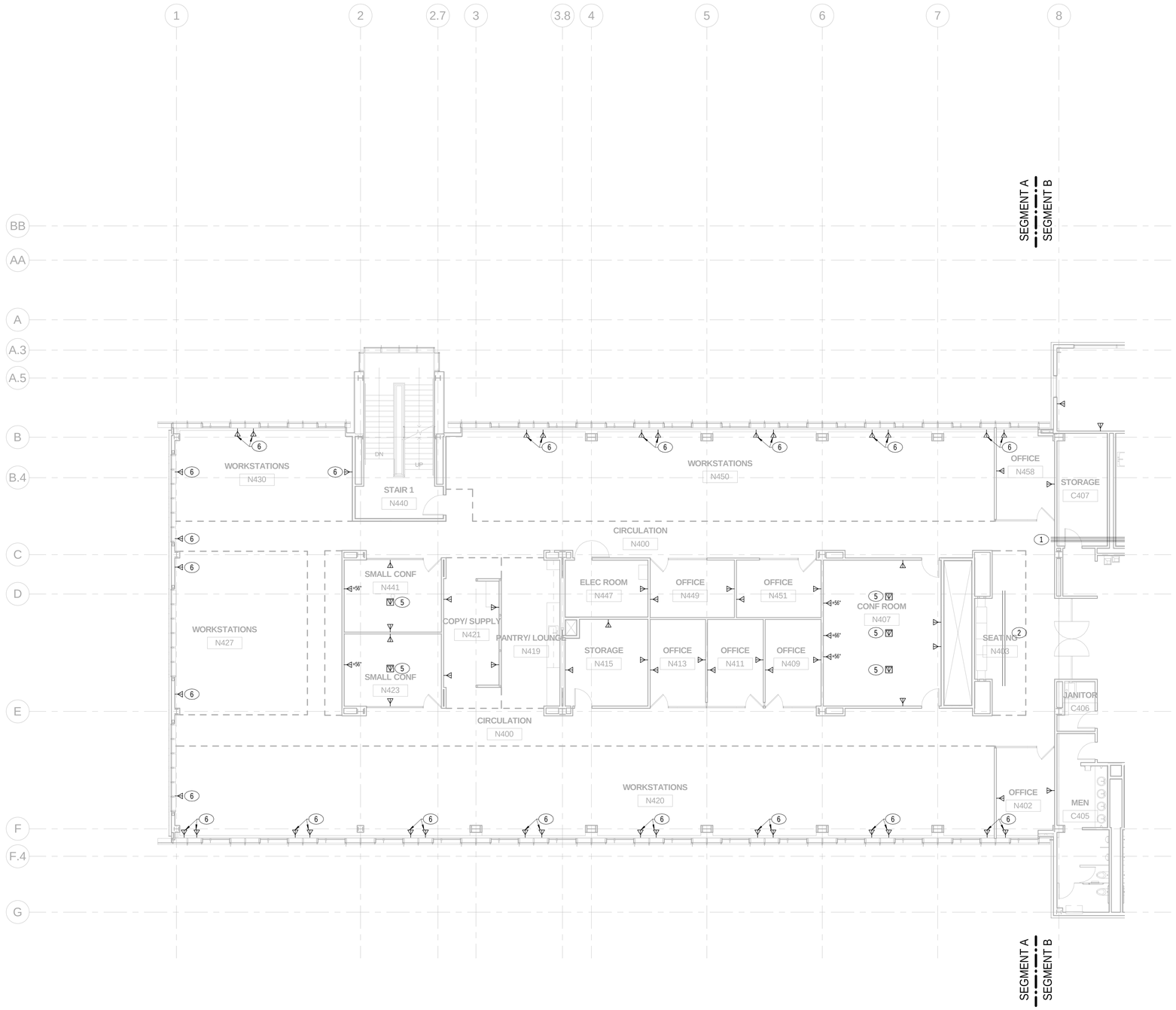

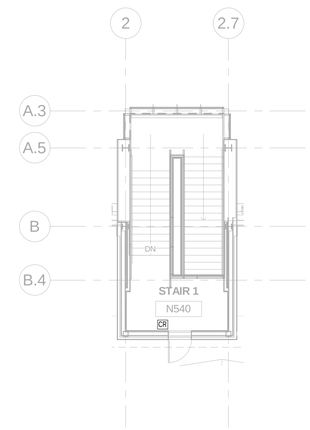

2 STAIR 1 PENTHOUSE
1/8" = 1'-0"

100% SUBMITTAL

NORTH

1/8"=1'-0" 8' 4' 0 8' 16'

AECOM
AECOM TECHNICAL SERVICES, INC.
3101 WILSON BOULEVARD
SUITE 900
ARLINGTON, VA 22201
T: 703-682-4900 F: 703.682.4901
www.aecom.com

SEAL AREA

STATE OF MARYLAND
JIEEB PAN
No. 40968
PROFESSIONAL ENGINEER
10-11-2012

KEY PLAN

SEGMENT - A

REV	DATE	DESCRIPTION	S&R BR.	CUSTOMER	PM	SECT. HEAD

	INITIALS	DATE
DRAWN BY	LB/BF	
CHECKED BY	JR/MM	
A-E MANAGER	EW	
ENVIRONMENTAL BRANCH	JH	
SAFETY BRANCH	CS	
CM	MMD	
PM	RWP	
CUSTOMER	JWB	
ENG. BRANCH	DGL	

LEVEL-4 ELECTRICAL TELECOMM. PLAN SEGMENT A

T-104a

FLIGHT PROJECTS BUILDING

NATIONAL AERONAUTICS AND SPACE ADMINISTRATION
GODDARD SPACE FLIGHT CENTER GREENBELT, MARYLAND
FACILITIES MANAGEMENT DIVISION

DATE ISSUED	CoF CODE OR WR#	AECOM PROJECT NO.	SCALE
10/12/2012	12GXAZ	60187636	1/8" = 1'-0"

FILE DATE: 10/11/2012 2:15:49 PM

GENERAL NOTES:

1. COORDINATE WITH ARCHITECTURAL ELEVATIONS FOR EXACT MOUNTING LOCATIONS.

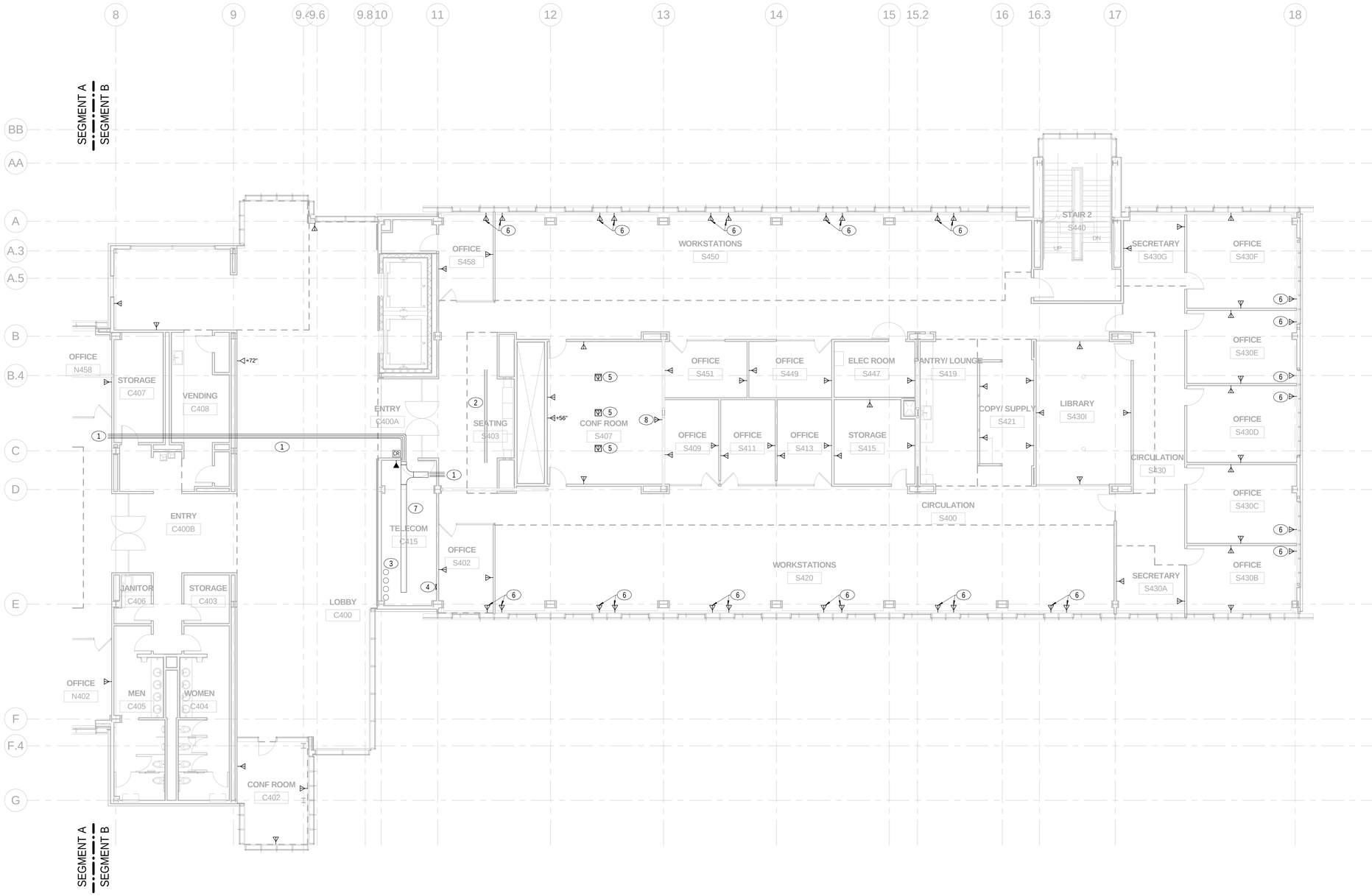

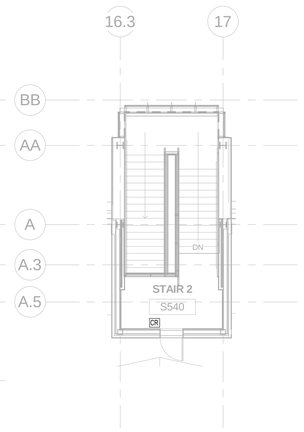

2 STAIR 2 PENTHOUSE
1/8" = 1'-0"

KEY NOTES:

1. (4) 4" CONDUITS.
2. (2) 4" CONDUITS.
3. (4) 4" CONDUITS TO 2ND FLOOR TELECOM ROOM.
4. GROUNDING BUS BAR.
5. PROVIDE (1) DUAL TELEPHONE OUTLET (FLOOR MOUNTED) & (1) DUAL DATA OUTLET (FLOOR MOUNTED) AT EACH LOCATION U.O.N. PROVIDE (2) 1-1/4" CONDUIT TO 6" ABOVE CEILING (AIM CONDUIT TOWARD NEAREST IT ROOM) WITH A 4" J-BOX FOR EACH OUTLET SHOWN.
6. PROVIDE (1) QUAD TELEPHONE OUTLET & (1) QUAD DATA OUTLET AT EACH LOCATION. PROVIDE (1) 1-1/4" CONDUIT TO 6" ABOVE CEILING SPACE (AIM CONDUIT TOWARD NEAREST IT ROOM) WITH A 4" J-BOX FOR EACH OUTLET SHOWN.
7. CABLE TRAY: DEPTH 4", WIDTH 18", 9" RUNG SPACING.
8. PROVIDE (2) DATA OUTLETS MOUNTED AT 52" AND 70.5" AFF. COORDINATE FINAL LOCATION WITH ARCHITECTURE DRAWINGS AND ELEVATIONS.

100% SUBMITTAL

NORTH

1/8"=1'-0" 8' 4' 0 8' 16'

AECOM

AECOM TECHNICAL SERVICES, INC.
3101 WILSON BOULEVARD
SUITE 900
ARLINGTON, VA 22201

T: 703-682-4900 F: 703.682.4901
www.aecom.com

SEAL AREA

STATE OF MARYLAND
JEEB-PEN
10-12-2012
No. 40964
PROFESSIONAL ENGINEER

KEY PLAN

SEGMENT - B

REV	DATE	DESCRIPTION	S&R BR.	CUSTOMER	PM	SECT. HEAD

	INITIALS	DATE
DRAWN BY	LB/BF	
CHECKED BY	JR/MM	
A-E MANAGER	EW	
ENVIRONMENTAL BRANCH	JH	
SAFETY BRANCH	CS	
CM	MMD	
PM	RWP	
CUSTOMER	JWB	
ENG. BRANCH	DGL	

LEVEL-4 ELECTRICAL TELECOMM. PLAN SEGMENT B

T-104b

FLIGHT PROJECTS BUILDING

NATIONAL AERONAUTICS AND SPACE ADMINISTRATION

GODDARD SPACE FLIGHT CENTER GREENBELT, MARYLAND
FACILITIES MANAGEMENT DIVISION

DATE ISSUED	CoF CODE OR WR#	AECOM PROJECT NO.	SCALE
10/12/2012	12GXAZ	60187636	1/8" = 1'-0"

FILE DATE: 10/11/2012 2:15:52 PM

GENERAL NOTES:

1. COORDINATE WITH ARCHITECTURAL ELEVATIONS FOR EXACT MOUNTING LOCATIONS.

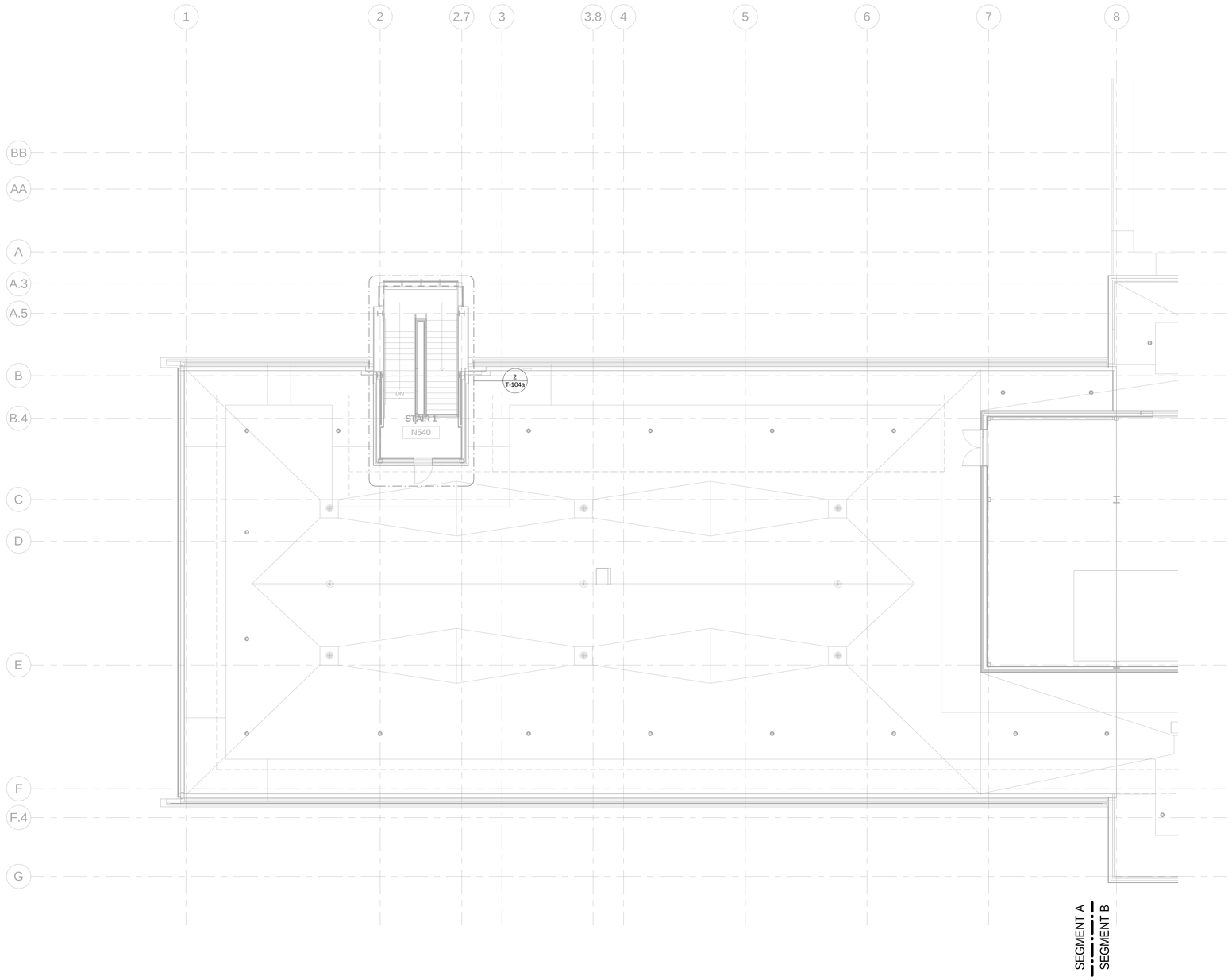

100% SUBMITTAL

AECOM

AECOM TECHNICAL SERVICES, INC.
3101 WILSON BOULEVARD
SUITE 900
ARLINGTON, VA 22201

T: 703-682-4900 F: 703.682.4901
www.aecom.com

SEAL AREA

STATE OF MARYLAND
ENGINEER
10-11-2012
NO. 40964
PROFESSIONAL ENGINEER

KEY PLAN

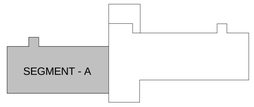

1/8"=1'-0" 8' 4' 0 8' 16'

REV	DATE	DESCRIPTION	S&R BR.	CUSTOMER	PM	SECT. HEAD

	INITIALS	DATE
DRAWN BY	LB/BF	
CHECKED BY	JR/MM	
A-E MANAGER	EW	
ENVIRONMENTAL BRANCH	JH	
SAFETY BRANCH	CS	
CM	MMD	
PM	RWP	
CUSTOMER	JWB	
ENG. BRANCH	DGL	

PENTHOUSE - ELECTRICAL TELECOMM. PLAN SEGMENT A

T-105a

FLIGHT PROJECTS BUILDING

NATIONAL AERONAUTICS AND SPACE ADMINISTRATION

GODDARD SPACE FLIGHT CENTER GREENBELT, MARYLAND
FACILITIES MANAGEMENT DIVISION

DATE ISSUED	CoF CODE OR WR#	AECOM PROJECT NO.	SCALE
10/12/2012	12GXAZ	60187636	1/8" = 1'-0"

FILE DATE: 10/11/2012 2:15:53 PM

GENERAL NOTES:

1. COORDINATE WITH ARCHITECTURAL ELEVATIONS FOR EXACT MOUNTING LOCATIONS.

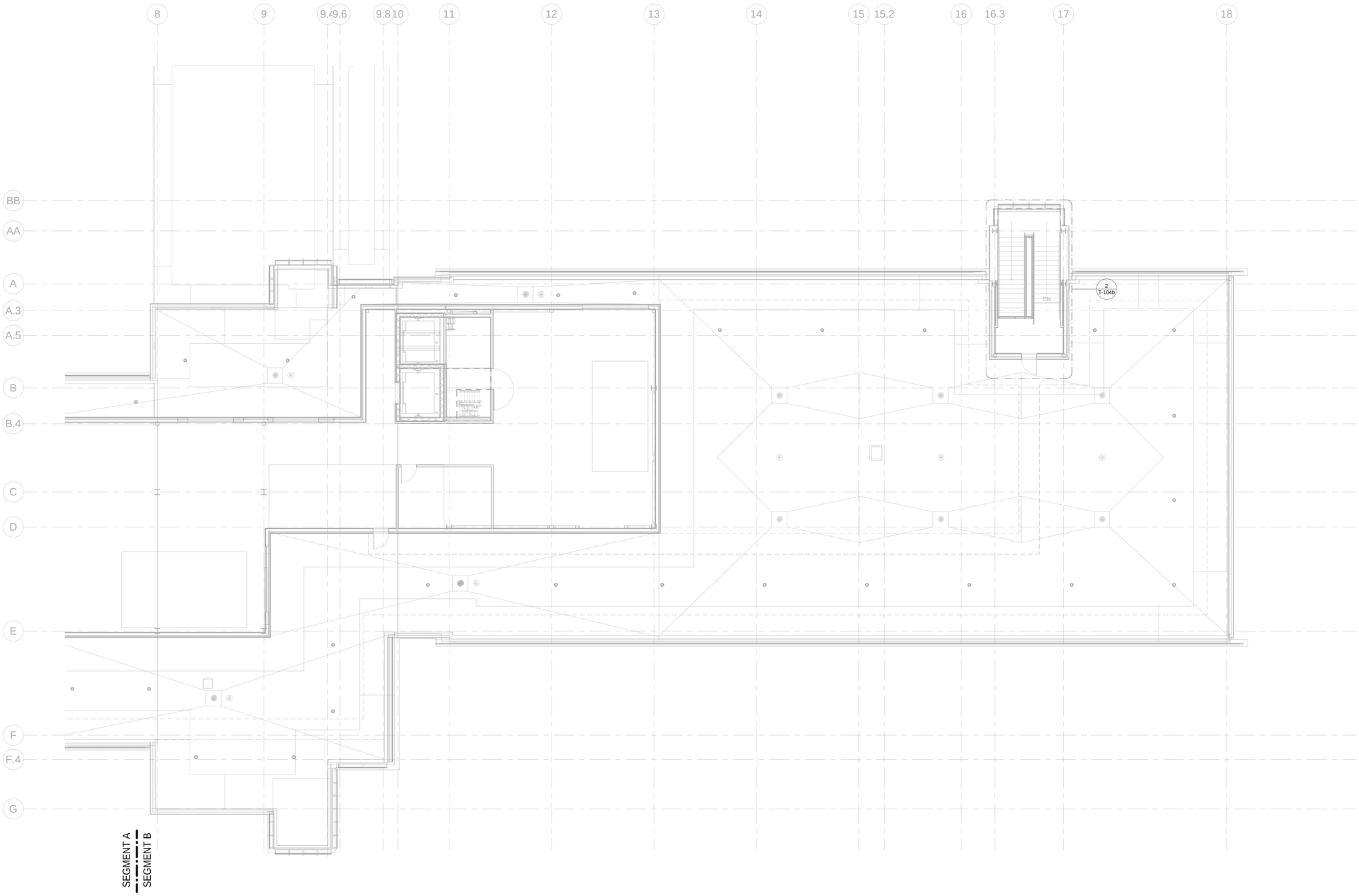

100% SUBMITTAL

AECOM

AECOM TECHNICAL SERVICES, INC.
3101 WILSON BOULEVARD
SUITE 900
ARLINGTON, VA 22201

T: 703-682-4900 F: 703.682.4901
www.aecom.com

SEAL AREA

STATE OF MARYLAND
ENGINEER
10-15-2012
No. 4096
PROFESSIONAL ENGINEER

KEY PLAN

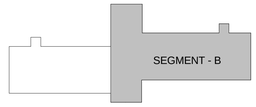

1/8"=1'-0" 8' 4' 0 8' 16'

REV	DATE	DESCRIPTION	S&R BR.	CUSTOMER	PM	SECT. HEAD

	INITIALS	DATE
DRAWN BY	LB/BF	
CHECKED BY	JR/MM	
A-E MANAGER	EW	
ENVIRONMENTAL BRANCH	JH	
SAFETY BRANCH	CS	
CM	MMD	
PM	RWP	
CUSTOMER	JWB	
ENG. BRANCH	DGL	

PENTHOUSE - ELECTRICAL TELECOMM. PLAN SEGMENT B

T-105b

FLIGHT PROJECTS BUILDING

NATIONAL AERONAUTICS AND SPACE ADMINISTRATION

GODDARD SPACE FLIGHT CENTER GREENBELT, MARYLAND
FACILITIES MANAGEMENT DIVISION

DATE ISSUED	CoF CODE OR WR#	AECOM PROJECT NO.	SCALE
10/12/2012	12GXAZ	60187636	1/8" = 1'-0"

FILE DATE: 10/11/2012 2:15:56 PM