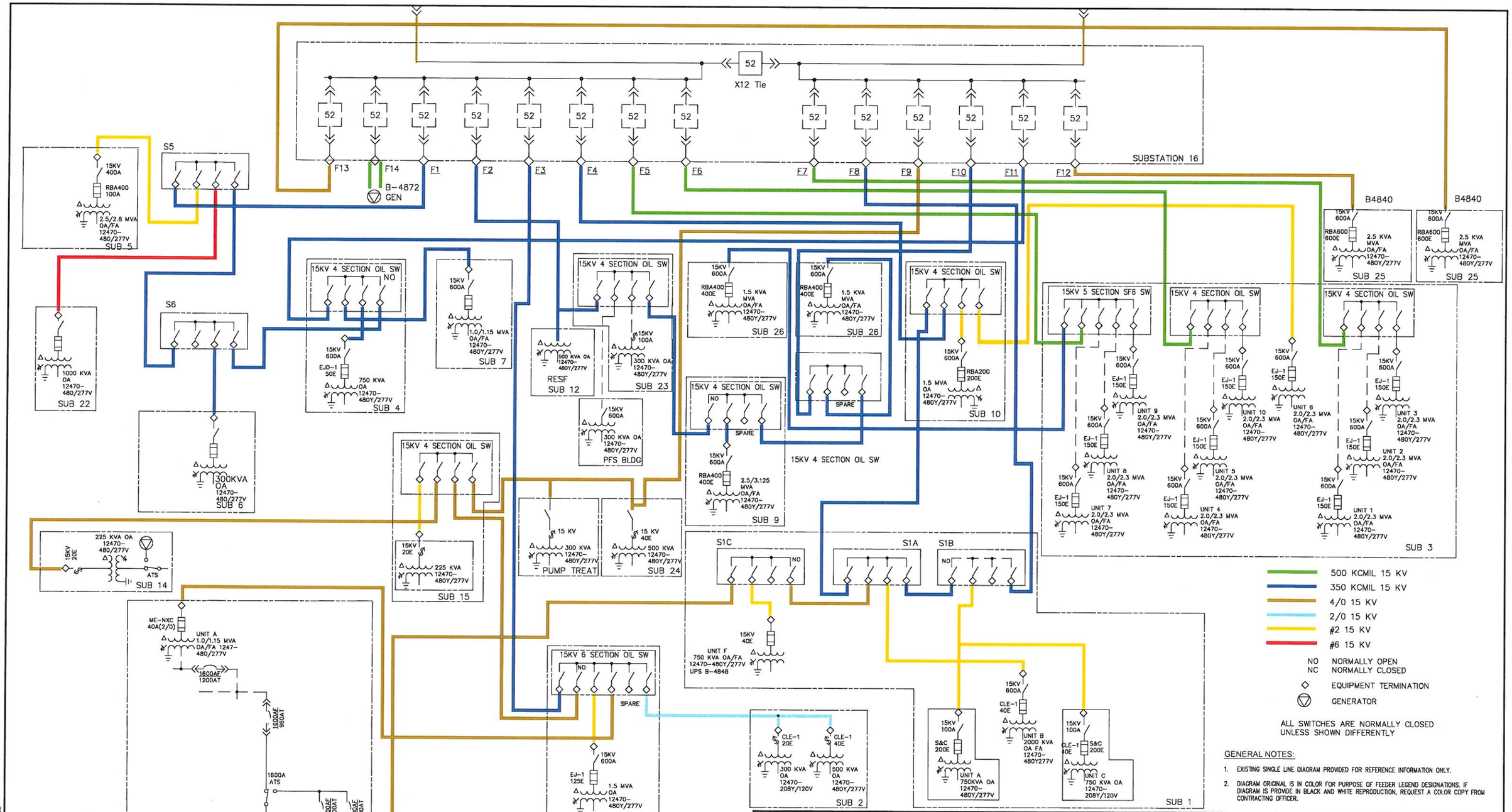

REGISTERED PROFESSIONAL ENGINEER KURT KAISER No. E015181 Exp. 6-30-12 ELECTRICAL STATE OF CALIFORNIA

DONN C. GILMORE & ASSOCIATES, INC.
Consulting Mechanical and Electrical Engineers
DCGA
4051 E. La Palma Ave., Ste. A
Anaheim, CA 92807
Ph: 714.630.4191
Fax: 714.630.4805

DATE	SYM	REVISION	BY	A'PD

NATIONAL AERONAUTICS AND SPACE ADMINISTRATION
DRYDEN FLIGHT RESEARCH CENTER
EDWARDS, CA

DRAWING TITLE
EXISTING ELECTRICAL SINGLE LINE FROM SUBSTATION 16

PROJECT TITLE
REPAIR PRIMARY ELECTRICAL DISTRIBUTION SYSTEM, PHASE VII
100% FINAL DESIGN

APPROVALS	DATE
Chief, Facilities Engineering & Asset Mgmt. Office	
Project Manager	
Facility Manager	
Project Requestor/Customer	
Safety, Health & Environmental	
Office of Protective Services	
Office of the CIO	

DATE STRTD	7/22/10	DATE PRNTD	6/17/11
DRAWN BY	WAS	TRADE SK. No.	EDM-1705
SCALE	NONE		
FILE NAME		E11	SHEET No. __ of __

DWG P:\3075 Phase 7 Substation\Dwg\E11\3075 E11.dwg USER bauhoey
DATE June 27, 2011 1:34pm XREF'S 1ef-3 Title Block IMAGES