National Aeronautics and Space Administration

DRYDEN FLIGHT RESEARCH CENTER

PROJECT TITLE:

REPAIR CENTER-WIDE FIRE MAINS

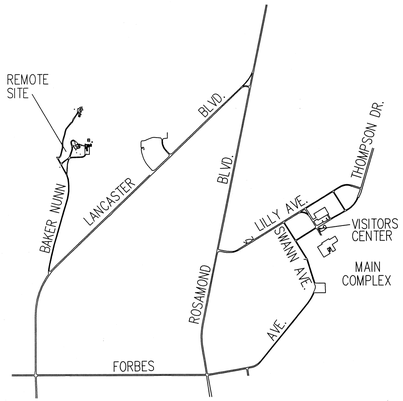

AREA PLAN

NOT TO SCALE

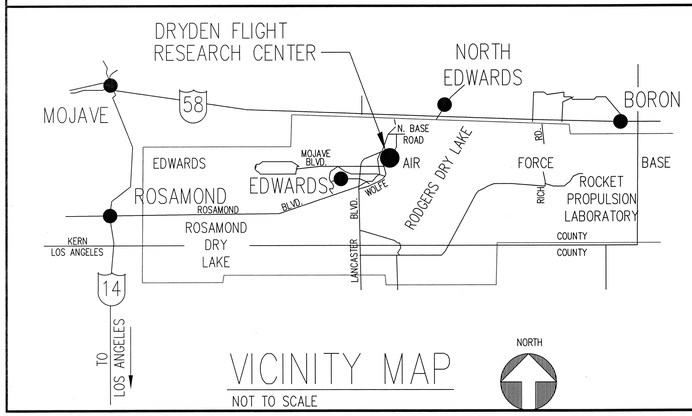

VICINITY MAP

NOT TO SCALE

DRAWING INDEX

SHEET NO.	DWG NO.	SHEET TITLE
1	T-1	TITLE SHEET
2	T-2	LEGEND, ABBREVIATIONS & NOTES
3	T-3	EXISTING FIRE MAIN LAYOUT
4	T-4	NEW FIRE MAIN LAYOUT & PHASING
5	T-5	PROJECT WORK NOTES
6	C-1	UTILITY PLAN #1
7	C-2	UTILITY PLAN #2
8	C-3	UTILITY PLAN #3
9	C-4	UTILITY PLAN #4
10	C-5	UTILITY PLAN #5
11	C-5.1	NOTES FOR UTILITY PLAN #5
12	C-6	UTILITY PLAN #6
13	C-7	UTILITY PLAN #7
14	C-8	UTILITY PLAN #8
15	C-9	UTILITY PLAN #9
16	C-10	UTILITY PLAN #10
17	C-10.1	NOTES FOR UTILITY PLAN #10
18	C-11	UTILITY PLAN #11
19	C-12	UTILITY PLAN #12
20	C-13	CIVIL DETAILS
21	C-14	CIVIL DETAILS
22	C-15	CIVIL DETAILS
23	C-16	CIVIL DETAILS
24	C-17	CIVIL DETAILS
25	C-18	CIVIL DETAILS

DRAWING INDEX

SHEET NO.	DWG NO.	SHEET TITLE
26	C-19	CIVIL DETAILS
27	C-20	HORIZONTAL PIPE LAYOUT
28	C-21	HORIZONTAL PIPE LAYOUT
29	C-22	HORIZONTAL PIPE LAYOUT
30	FA-1	FIRE ALARM PLAN
31	FA-2	BUILDING B4852, TANKS NB103 & NB108
32	FA-3	BUILDING B4853 & TANK NB114
33	FA-4	BUILDING B4840 & NEW FIREWATER TANK
34	FA-5	FIRE ALARM DETAILS
35	E1	ELECTRICAL LEGEND AND NOTES
36	E2	ELECTRICAL UTILITY PLAN
37	E3	ELECTRICAL PANEL AND SCHEDULES

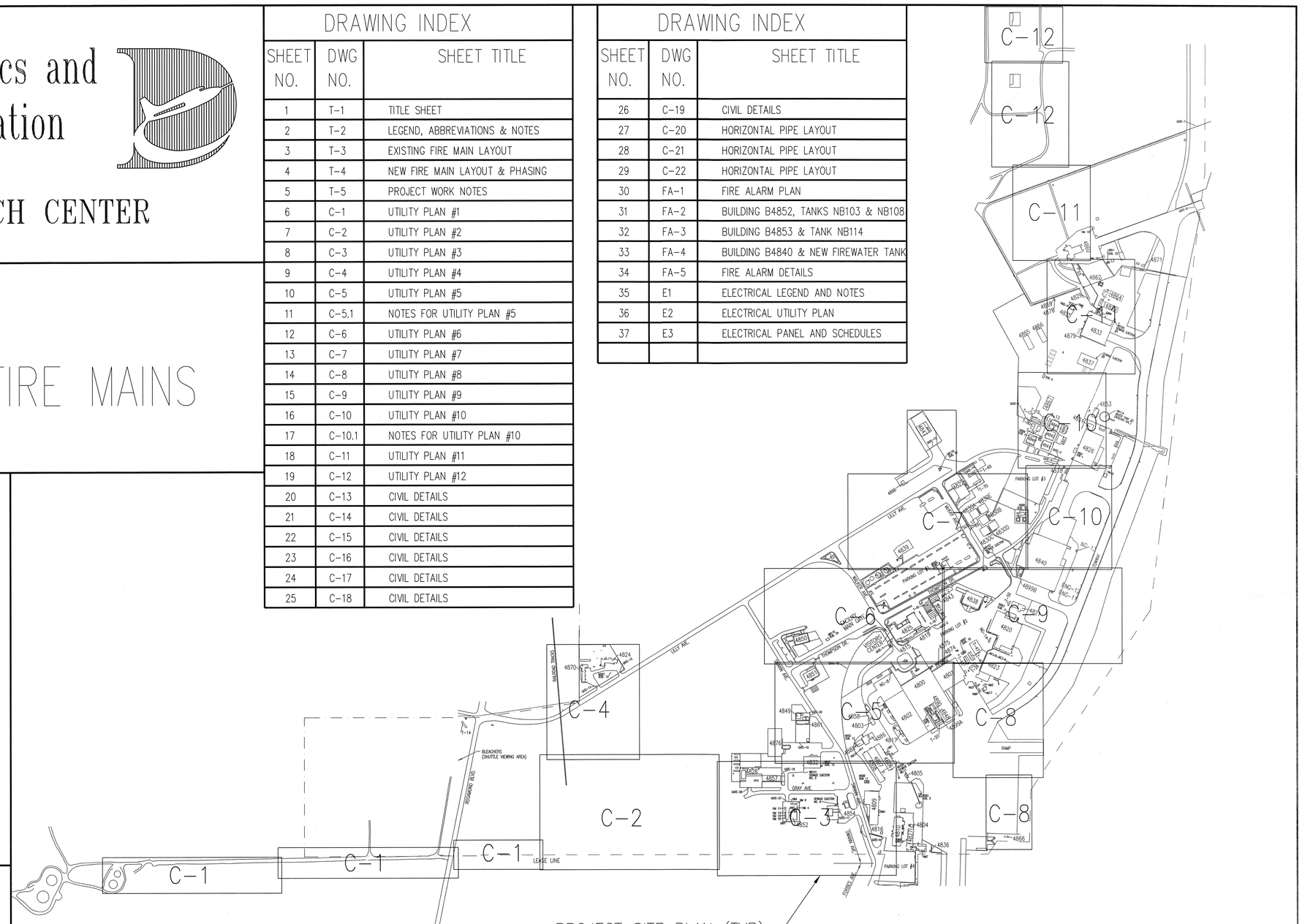

PROJECT SITE PLAN (TYP)

DRYDEN FLIGHT RESEARCH CENTER
MAIN COMPLEX SITE PLAN

SCALE: 1"= 400'

400' 200' 0' 400' 800'

100M 50M 0M 100M 200M

NORTH

REGISTERED PROFESSIONAL ENGINEER
JOHN F. BERTRAM III
NO. 60229
EXP. 6/30/12
CIVIL
STATE OF CALIFORNIA

JBY #0622-15

JB YOUNG & ASSOCIATES
CONSULTANT ENGINEERS
11440 RIVERSIDE DRIVE, SUITE M
LAKESIDE, CA 92040
619-448-9424
619-448-4690 (FAX)

DATE	SUB	DESCRIPTION	BY	A'PD
07/22/11	C	100% FINAL DESIGN		
06/30/11	B	95% NEAR-FINAL DESIGN		
01/31/11	A	30% PRELIMINARY DESIGN		

NATIONAL AERONAUTICS AND SPACE ADMINISTRATION
DRYDEN FLIGHT RESEARCH CENTER
EDWARDS, CA

DRAWING TITLE

TITLE SHEET

PROJECT TITLE

REPAIR CENTER-WIDE FIRE MAINS
DESIGN SUBMITTAL "C"

APPROVALS	DATE
Chief, Facilities Engineering & Asset Mgmt. Office	2-1-12
Project Requestor/Customer	2-1-12
Facilities Project Manager	1-31-12
Chief, Office of Protective Services	02/01/12
Chief, Safety, Health and Environmental Office	2-1-12
DFRC Chief Information Officer	1 Feb 12

DATE STRTD	7/23/10	DATE PRNTD	7/22/11
DRAWN BY	JFB		EDM-1697
SCALE	AS NOTED	TRADE SH. No.	T-1
FILE NAME		SHEET No.	1 of 37

EXISTING CONDITIONS LEGEND

Symbol	Description
△	HORIZONTAL/VERTICAL CONTROL
○LP	LIGHT POLE
○PP	POWER POLE
○TS	TRAFFIC SIGNAL
┬S, ○S	SIGN
○ MH	MANHOLE
○ SMH	SEWER MANHOLE
□WH	WATER HANDHOLE
○V	VALVE WELL
⋈ PIV	POST INDICATOR VALVE
FH	FIRE HYDRANT
□DI	DRAIN INLET
□ CB	CATCH BASIN
□TB	TELEPHONE BOOTH
○FP	FLAG POLE
	TREE
x 1902.4	SPOT GRADE
IE 1992.3	INVERT ELEVATION
▭ PRV	PRESSURE REDUCING VALVE ASSY
▭ BPA	BACKFLOW PREVENTION ASSEMBLY
	PAINTED CROSSWALK
	CANOPY/PATIO
1732	STRUCTURE OR BUILDING AND NUMBER
	FENCE
WALL	MASONRY WALL
	RETAINING WALL
C&G	CURB/GUTTER
ASPH.	ASPHALT SURFACE
DIRT	DIRT SURFACE
CONC.	CONCRETE SURFACE
	GUARDRAIL
	TREE LINE
1750	INDEX CONTOUR (5' INTERVALS)
	INTERMEDIATE CONTOUR (1' INTERVALS)
	APPROXIMATE CONTOUR
HDWL	HEADWALL
E	ELECTRICAL LINE–UNDERGROUND
E O/H	ELECTRICAL LINE–OVERHEAD
FUEL	FUEL LINE
T	TELECOMMUNICATIONS
SS	SANITARY SEWER LINE
SFM	SANITARY SEWER FORCEMAIN LINE
W	POTABLE WATER LINE
F	NON–POTABLE WATER LINE USED EXCLUSIVELY FOR FIRE SUPPRESSION SYSTEMS AND FIRE HYDRANTS.

NEW WORK CONDITIONS LEGEND

Symbol	Description
F	– EXISTING FIRE WATER PIPE TO REMAIN
F	– CAP AND ABANDON EXST FIRE WATER PIPE
F	– NEW PIPE CAP
6"F	– NEW NON–POTABLE PVC FIRE WATER PIPE. MIN 200 PSI RATING. SEE SPECIFICATIONS.
6"F FH	– NEW FIRE HYDRANT
⊗	– NEW FIRE WATER VALVE
⊗ PIV	– NEW FIRE WATER VALVE WITH POST INDICATOR OPERATOR
● 6"F	– POINT OF CONNECTION
	– NEW FIRE DEPARTMENT CONNECTION

GENERAL NOTES

1. THE CONTRACTOR SHALL PROVIDE ALL LABOR AND MATERIALS TO ASSURE A COMPLETE AND PROPER INSTALLATION OF THIS PROJECT.

2. SAWCUT, REMOVE, DISPOSE OF AND REPLACE ASPHALT PAVEMENT AND/OR CONCRETE PAVEMENT TO MATCH EXISTING WHERE REQUIRED.

3. EXISTING SIGNS REMOVED DURING CONSTRUCTION SHALL BE REPLACED IMMEDIATELY AFTER TRENCH HAS BEEN BACKFILLED AND COMPACTED. USE TEMPORARY PORTABLE SIGNS WHERE REQUIRED.

4. AS–BUILT UTILITIES SHOWN INCLUDING MAINS AND ALL LATERALS ASSUMED TO BE LIVE. EXACT LOCATIONS UNVERIFIED.

5. ALL CONSTRUCTION IS NEW UNLESS OTHERWISE NOTED.

6. ALL DIMENSIONS AND CONDITIONS SHALL BE VERIFIED IN THE FIELD BY THE CONTRACTOR.

7. THE CONTRACTOR SHALL EXERCISE EXTREME VERIFIED IN THE FIELD BY THE CONTRACTOR. STRUCTURE, EQUIPMENT, OR UTILITIES. ANY DAMAGE SHALL BE REPAIRED AT THE CONTRACTORS EXPENSE.

8. ALL RESULTANT DEBRIS SHALL BE DISPOSED OF OFF BASE BY THE CONTRACTOR.

9. CONTRACTOR SHALL OBTAIN AIR PERMIT REGISTRATION FOR ALL PORTABLE EQUIPMENT THAT DISCHARGE EMISSIONS (AIR COMPRESSORS, GENERATORS, EQUIPMENT WITH AN INTERNAL COMBUSTION ENGINE OVER 50 BHP, ETC...) FROM THE KERN COUNTY AIR POLLUTION CONTROL DISTRICT. A COPY OF THIS PERMIT SHALL BE SUBMITTED TO THE CODE S.H. OFFICE. IN ADDITION, CONTRACTOR SHALL APPLY FOR A LOCAL PERMIT FOR AIR COMPRESSORS FROM MR. RICHARD WONG.

10. THE CONTRACTOR SHALL INSTALL BITUMINOUS PAINT BINDER BETWEEN NEW ASPHALT PAVEMENT AND EXISTING CONCRETE & ASPHALT PAVEMENT.

11. LEAD PAINT HAS BEEN DETERMINED TO BE PRESENT IN TAXIWAY/TOW–WAY STRIPING; IF THEY WILL BE DISTURBED DURING CONSTRUCTION, PROPER SAFETY, HEALTH, AND ENVIRONMENTAL PROTOCOLS MUST BE DEVELOPED AND FOLLOWED. LEAD–BASED PAINT SHALL BE REMOVED BY A LICENSED CONTRACTOR PRIOR TO CONSTRUCTION ACTIVITIES. ALL WORK MUST BE CONDUCTED IN A MANNER THAT DOES NOT EXPOSE WORKERS TO LEAD AS OUTLINED IN 40 CFR PARTS 61 AND 763, 29 CFR PARTS 1910 AND 1926, AND 8CCR SECTION 5216.

12. FIRE HYDRANTS SHALL BE INSTALLED ADJACENT TO PAVED AREAS, NOT CLOSER THAN 3' AND NOT FARTHER THAN 7' FROM THE ROADWAY SHOULDER OR CURB LINE, WHERE THEY WILL BE ACCESSIBLE TO THE FIRE DEPARTMENT APPARATUS. HYDRANT BARRELS SHALL BE LONG ENOUGH TO PERMIT AT LEAST 18" CLEARANCE BETWEEN THE CENTER OF THE 4.5" PUMPER CONNECTION AND GRADE.

13. CONTRACTOR SHALL REPLACE ALL PAVEMENT STRIPING TO MATCH EXISTING THAT IS REMOVED DURING UTILITY TRENCHING.

14. CONTRACTOR HAS THE OPTION OF INSTALLING RESTRAINED JOINT THRUST RESTRAINT INSTEAD OF THRUST BLOCKS ON NEW BELOW GROUND FIRE WATER PIPE FLANGED TEES, BENDS, AND VALVES. IF RESTRAINED JOINTS ARE USED, THEN THEY SHALL BE INSTALLED FOR A MINIMUM DISTANCE OF 90' ON BOTH SIDES OF A RESTRAINED JOINT FLANGED TEE, BEND OR VALVE.

15. ALL NEW UNDER GROUND DUCTILE IRON PIPE, DUCTILE IRON PIPE FITTINGS, AND RESTRAINED PIPE JOINT FITTINGS SHALL BE WRAPPED WITH 2 LAYERS OF 10 MIL POLYETHYLENE FOR PROTECTION FROM CORROSIVE SOILS.

16. CONTRACTOR SHALL REMOVE & DISPOSE OF ALL NON–POTABLE WATER FROM ALL EXISTING FIRE WATER MAINS THAT ARE ABANDONED–IN–PLACE UNDER THIS PROJECT.

17. ALL EXISTING BUILDING FIRE SUPPRESSION SYSTEMS SHALL NOT BE "OUT OF SERVICE" FOR MORE THAN 4 HOURS IN 1 WORK WEEK WITHOUT PERMISSION BY CONTRACTING OFFICER.

18. WHEN EXISTING FIRE HYDRANT IS TAKEN "OUT OF SERVICE", THE NEW DESIGNATED FIRE HYDRANT REPLACEMENT SHALL BE PUT "IN SERVICE" WITH IN 4 HOURS.

19. CONTRACTOR SHALL COORDINATE PHASING PLAN TO CONTRACTING OFFICER FOR APPROVAL BEFORE CONSTRUCTION.

ASBUILT GIS SURVEY NOTES

1. THE CONTRACTOR SHALL PROVIDE ASBUILT GPS HORIZONTAL COORDINATES AND VERTICAL ELEVATIONS FOR ALL NEW FIRE WATER UTILITY DEVICES. SURVEY SHALL BE CONDUCTED IN NAD 27 AND NAVD 27 CALIFORNIA STATE PLANE. NEW UTILITY DEVISES SHALL INCLUDE: FIRE WATER PIPE VALVES (TOP OF HANDHOLE), AIR RELEASE VALVES (TOP OF PAD), BLOW OFF VALVES (TOP OF PAD), BLOW OFF RISERS (TOP OF GRADE), FIRE HYDRANTS (TOP OF PAD), ETC... THE CONTRACTOR SHALL RECORD THIS DATA ON THE ASBUILTS. ACCURACY SHALL BE TO THE 0.01'. CONTRACTOR SHALL ALSO FURNISH THIS SURVEY DATA IN AUTOCAD 2004.

2. THE CONTRACTOR SHALL ASBUILT SURVEY NEW WATER PIPELINE LAYOUT. THE CONTRACTOR SHALL PROVIDE ASBUILT GPS HORIZONTAL COORDINATES AND VERTICAL ELEVATIONS IN NAD 27 AND NAVD 27 CALIFORNIA STATE PLANE. CONTRACTOR SHALL SURVEY ALL NEW PIPELINE POINT OF CONNECTIONS, HORIZONTAL DEFLECTIONS, BENDS, AND TEE'S. CONTRACTOR RECORD THIS DATA ON THE ASBUILT DRAWINGS.

ABBREVIATIONS

A	ANGLE
AB	ABANDONED
ACP	ASBESTOS CEMENT PIPE
AC	ASPHALTIC CONCRETE
ARV	AIR RELEASE VACUUM ASSY
ASPH	ASPHALT
ASSY	ASSEMBLY
A/G	ABOVE GROUND
AVE.	AVENUE
B	BELL
BC	BEGIN CURVE
BFP	BACKFLOW PREVENTER
BLDG	BUILDING
B/G	BELOW GROUND
BOT	BOTTOM
BOV	BLOW–OFF VALVE ASSY
CI	CAST IRON
CL	CLASS, CENTER LINE
CLR	CLEAR
CNTR	CENTER
CO	CLEANOUT
CONT	CONTINUOUS
CONC	CONCRETE
CONN	CONNECT, CONNECTION
CPE	CHLORINE POLYETHYLENE
CPLG	COUPLING
C/G	CURB/GUTTER
℄, C.L.	CENTER LINE
DESC	DESCRIPTION
DET	DETAIL
DBL	DOUBLE
DIA, ø	DIAMETER
DI	DUCTILE IRON
D.I.P.	DUCTILE IRON PIPE
DWG.	DRAWING
E	EAST, EASTINGS
EQ	EQUAL
EA	EACH
E	ELECTRICAL
EC	END CURVE
EIC	ENGINEER IN CHARGE
EL	ELEVATION
EMH	ELECTRICAL MANHOLE
ETC	ETCETERA
EW	EACH WAY
EXP	EXPANSION
EXST	EXISTING
F	FIRE WATER
FH	FIRE HYDRANT
FLG	FLANGE
FIN.	FINISH
FL	FLOW LINE
FM	FACTORY MUTUAL
FO	FIBER OPTIC
FS	FAR SIDE
FT	FEET
GAL	GALLON
GALV	GALVANIZED
GP	GUARD POST
GR	GUARD RAIL
GIS	GEOGRAPHICAL INFORMATION SYSTEM
GPM	GALLONS PER MINUTE
GPS	GEOGRAPHICAL POSITIONING SYSTEM
GR	GRADE
GV	GATE VALVE
H	HIGH, HEIGHT
HH	HANDHOLE
HDPE	HIGH DENSITY POLYETHYLENE
HDWL	HEADWALL
HORIZ	HORIZONTAL
HP	HIGH PRESSURE
HTHW	HIGH TEMPERATURE HOT WATER
HWY	HIGHWAY
I.D.	INTERIOR DIMENSION
IE	INVERT ELEVATION
IRR	IRRIGATION
L	ARC LENGTH, LENGTH
MAG	MAGNETIC
MAX	MAXIMUM
MIN	MINIMUM
MH	MANHOLE
MFR	MANUFACTURER
N	NORTH, NORTHINGS
NAD	NORTH AMERICAN DATUM
NAVD	NORTH AMERICAN VERTICAL DATUM
NAVFAC	NAVAL FACILITIES
N.I.C.	NOT IN CONTRACT
NPW	NON–POTABLE WATER
NF	NOT FOUND
NS	NEAR SIDE
NO.,#	NUMBER
O/C	ON CENTER
O.D.	OUTSIDE DIAMETER OR DIMENSIONS
OH, O/H	OVER HEAD
OPNG	OPENING
OS&Y, OSY	OUTSIDE STEM & YOKE
PCC	PORTLAND CEMENT CONCRETE
PL	PLATE
PE	PLAIN END
PE	POLYETHYLENE
PIV	POST INDICATOR VALVE
POC	POINT OF CONNECTION
P	POLE
PRV	PRESSURE REDUCING VALVE
PSF	POUNDS PER SQUARE FOOT
PSI	POUNDS PER SQUARE INCH
PT	POINT
PWO	PUBLIC WORKS OFFICE
PP	POWER POLE
PVC	POLYVINYL CHLORIDE
PVMT	PAVEMENT
R	RADIUS
RD.	ROAD
RED.	REDUCER
REF	REFERENCE
REINF	REINFORCED
REQD	REQUIRED
RJ	RESTRAINED JOINT
RPBP	REDUCED PRESSURE BACKFLOW PREVENTER
S/C	CONC. LINED/COATED STEEL PIPE
SS	SANITARY SEWER
SCH	SCHEDULE
S	SIGN, SLOPE
SFM	SEWER FORCE MAIN
SIM	SIMILAR
SMH	SEWER MANHOLE
SQ	SQUARE
SST	STAINLESS STEEL
ST.	STREET
STA	STATION
STL	STEEL
SP	STANDPIPE
TAP.	TAPPING
TB	THRUST BLOCK
T&B	TOP AND BOTTOM
TDH	TOTAL DYNAMIC HEAD
TEL.	TELEPHONE
TMH	TELEPHONE MANHOLE
T.W.	TOP OF WALL
TYP	TYPICAL
U/G	UNDERGROUND
UL	UNDERWRITERS LABORATORIES
UNK	UNKNOWN
U.O.N.	UNLESS OTHERWISE NOTED
UTIL	UTILITY
V	VALVE
VCP	VITRIFIED CLAY PIPE
VERT	VERTICAL
VLT	VAULT
W	WATER, WIDE, WIDTH
WH	WATER HANDHOLE
WLS	WELDED STEEL
W/	WITH
±	PLUS OR MINUS
△	DELTA
℄ (F/L)	FLOW LINE

CONSTRUCTION BID SCHEDULE

CONTRACTOR SHALL ISSUE THE BID WITH THE FOLLOWING ITEMS INCLUDED AS DISTINCT, SEPARATE BID OPTIONS. NO OTHER SEPARATION OF OPTIONS OR ALLOWANCE ITEMS IS TO BE INCLUDED IN THE BID. SEE ENTIRE SET FOR LOCATION AND DESCRIPTION OF BID OPTIONS.

BASE BID ITEM: PROVIDE ALL MATERIALS, EQUIPMENT AND LABOR TO CONSTRUCT THE SCOPE OF WORK FOR THE REPAIR FIRE WATER INFRASTRUCTURE PROJECT AS SHOWN AND DESCRIBED IN THE CONTRACT DRAWINGS AND SPECIFICATIONS; LOCATED AT NASA DRYDEN FLIGHT RESEARCH CENTER, EDWARDS AFB, CA 93523; WITH THE EXCEPTION OF THE WORK DESCRIBED HEREAFTER AND INCLUDED IN ADDITIVE BID OPTIONS #1 THROUGH #4

BID OPTION ⟨#⟩ – INDICATES BID OPTION SCOPE OF WORK

BID OPTION ⟨1⟩ PROVIDE ALL MATERIALS, EQUIPMENT AND LABOR TO SAFELY DEMOLISH AND INSTALL NEW 10" TO 3" FIRE FIRE WATER PIPING AND VALVES SHOWN CLOUDED ON C–11 AND C–12. WORK ALSO INCLUDES DEMOLISHING AND REPLACING PIV'S, FH'S, FDC ASSEMBLIES, PAVEMENT, GRADING WORK, AND EARTHWORK. IF OPTION IS NOT EXERCISED THEN THE CONTRACTOR SHALL CONNECT NEW FIRE WATER PIPING TO EXISTING FIRE WATER PIPING WITH 10" DI BENDS AND ADAPTER COUPLINGS.

BID OPTION ⟨2⟩ PROVIDE ALL MATERIALS, EQUIPMENT AND LABOR TO SAFELY TO INSTALL NEW 50,000 GALLON FIRE WATER TANK, ALL TANK APPURTANCES, LEVEL SENSORS, CATHODIC PROTECTION, TANK FOUNDATION, GRADING & EARTHWORK, PAVEMENT REPAIR, NEW 6" FILL PIPE, NEW 12" RECIRCULATION PIPE, NEW 20" SUCTION PIPING, VALVES, TAMPER SWITCHES, AND NEW POWER WHICH ARE ALL SHOWN ON C–10, E–2, AND FA–4. WORK INCLUDES CONNECTION TO BLDG 4840 FIRE PUMP ROOM. WORK DOES NOT INCLUDE NEW 20–INCH MAINLINE STREET PIPING AND FIRE FIRE HYDRANTS SHOWN ON DRAWING C–10.

BID OPTION ⟨3⟩ PROVIDE ALL MATERIALS, EQUIPMENT AND LABOR TO SAFELY DEMOLISH AND INSTALL NEW 20" FIRE FIRE WATER PIPING SHOWN CLOUDED ON DRAWING C–5. WORK ALSO INCLUDES DEMOLISHING AND REPLACING CONCRETE PAVEMENT, GRADING, AND EARTHWORK. IF OPTION IS NOT EXERCISED THEN THE CONTRACTOR SHALL CONNECT NEW FIRE WATER PIPING TO EXISTING FIRE WATER PIPING WITH 20" DI BENDS AND ADAPTER COUPLINGS.

BID OPTION ⟨4⟩ PROVIDE ALL MATERIALS, EQUIPMENT AND LABOR TO SAFELY DEMOLISH AND INSTALL NEW 18" TO 6" FIRE WATER PIPING & VALVES SHOWN CLOUDED ON C–10, C–19, E–2, AND FA–3. WORK INCLUDES DEMOLISHING AND REPLACING BPA'S, PIV'S, FDC ASSEMBLIES, METERS, AND PAVEMENT. WORK INCLUDES TANK PAINTING & REPLACING TANK CATHODIC PROTECTION. THE WORK INCLUDES GRADING WORK AND EARTHWORK. WORK INCLUDES TAMPER SWITCHES, TANK MONITORING, FIRE ALARM CONTROL PANEL MODIFICATIONS, FIRE ALARM DEVICE WORK, FUEL TANK WORK, AND POWER. THE WORK DOES NOT INCLUDE THE NEW 20" MAIN TO THE WEST OF B4853. IF OPTION IS NOT EXERCISED THEN THE CONTRACTOR SHALL CONNECT EXISTING 18" AND 6" CONNECTIONS FROM B4853 TO THE NEW 20" MAIN LOCATED TO THE WEST OF B4853.

BID OPTION ⟨5⟩ △1 PROVIDE ALL MATERIALS, EQUIPMENT AND LABOR TO SAFELY DEMOLISH AND INSTALL NEW 20" TO 3" FIRE FIRE WATER PIPING AND VALVES SHOWN CLOUDED ON C–10 AND C–11. WORK ALSO INCLUDES DEMOLISHING AND REPLACING PIV'S, FH'S, FDC ASSEMBLIES, PAVEMENT, GRADING WORK, AND EARTHWORK. IF OPTION IS NOT EXERCISED THEN THE CONTRACTOR SHALL CONNECT NEW FIRE WATER PIPING TO EXISTING FIRE WATER PIPING WITH 20" DI BENDS AND ADAPTER COUPLINGS.

HORIZONTAL AND VERTICAL CONTROL

MONUMENT #1:

CONCRETE MONUMENT AT CORNER OF WALKER AVE AND THOMPSON DR (NAD 27)
NORTHERN 528,183.086'
EASTERN 2,033,650.182'
ELEVATION 2,292.15'

MONUMENT #2:

CONCRETE MONUMENT NEAR CORNER OF MCKAY AVE AND THOMPSON DR (NAD 27)
NORTHERN 528,601.559'
EASTERN 2,034,416.916'
ELEVATION 2,280.85'

MONUMENT #3:

CONCRETE MONUMENT AT CORNER OF WALKER AVE AND LILLY AVE (NAD 27)
NORTHERN 528,717.766'
EASTERN 2,033,320.393'
ELEVATION 2,305.56'

REGISTERED PROFESSIONAL ENGINEER JONATHAN E. BERLUCHI NO. 60229 EXP. 6/30/12 CIVIL STATE OF CALIFORNIA

JBY #0622–15

JB YOUNG & ASSOCIATES
CONSULTANT ENGINEERS
11440 RIVERSIDE DRIVE, SUITE M
LAKESIDE, CA 92040
619–448–9424
619–448–4690 (FAX)

DATE	SUB	DESCRIPTION	BY	A'PD
05/10/12		NASA EDITS – DELTA 1 △1	TSS	TSS
07/22/11	C	100% FINAL DESIGN		
06/30/11	B	95% NEAR–FINAL DESIGN		
01/31/11	A	30% PRELIMINARY DESIGN		

NATIONAL AERONAUTICS AND SPACE ADMINISTRATION
DRYDEN FLIGHT RESEARCH CENTER
EDWARDS, CA

DRAWING TITLE
LEGEND, ABBREVIATIONS, & NOTES

PROJECT TITLE
REPAIR CENTER–WIDE FIRE MAINS
DESIGN SUBMITTAL "C"

APPROVALS	DATE
Chief, Facilities Engineering & Asset Mgmt. Office	5-10-12
Project Requestor/Customer	5-10-12
Facilities Project Manager	5-10-12
Chief, Office of Protective Services	10/5/12
Chief – Safety, Health and Environmental Office	5-10-12
DFRC Chief Information Officer	10 May 12

DATE STRTD	7/23/10	DATE PRNTD	7/22/11
DRAWN BY	JFB		EDM–1697
SCALE	AS NOTED	TRADE SH. No. T–2	SHEET No. 2 of 37
FILE NAME			

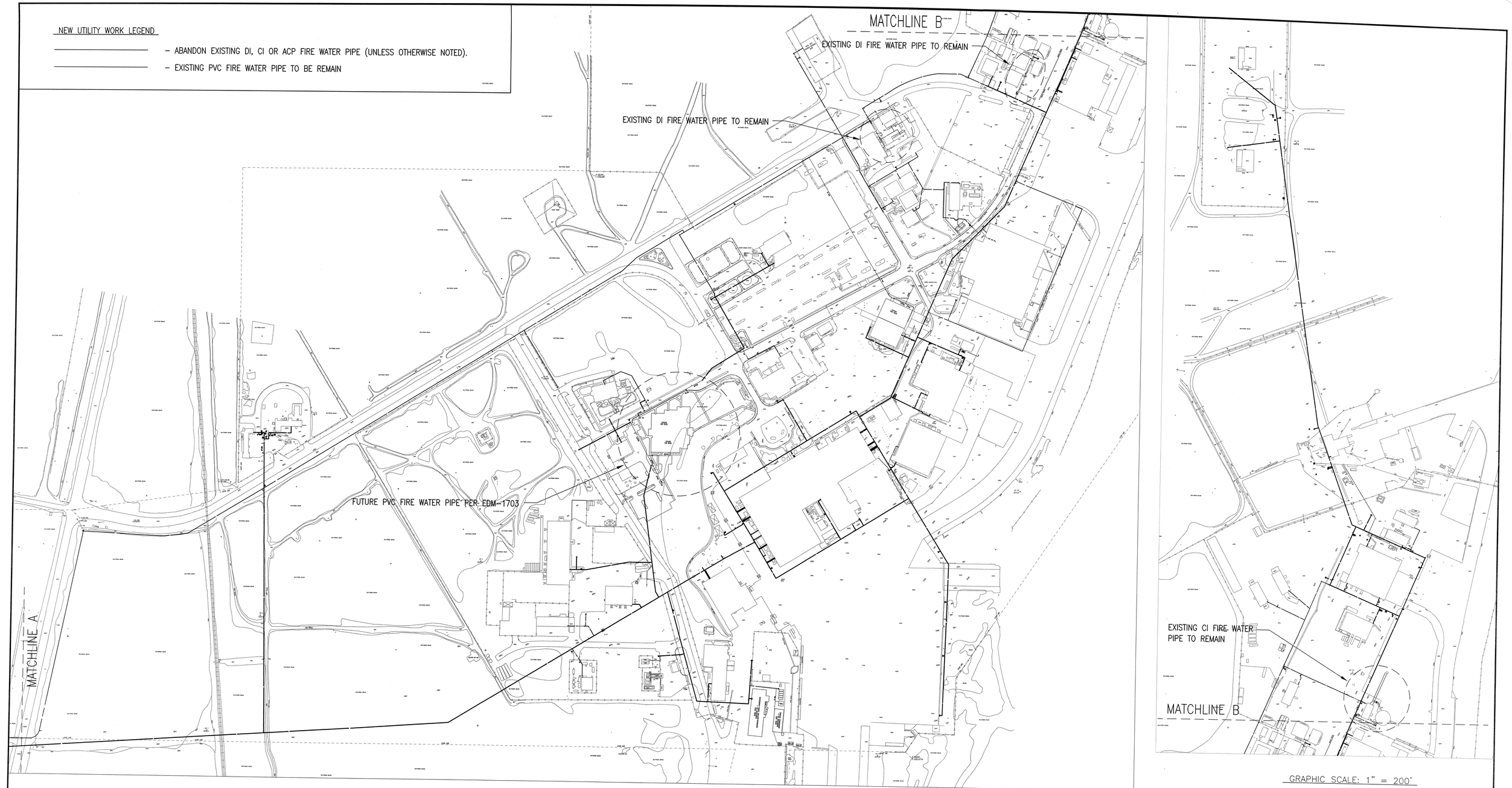

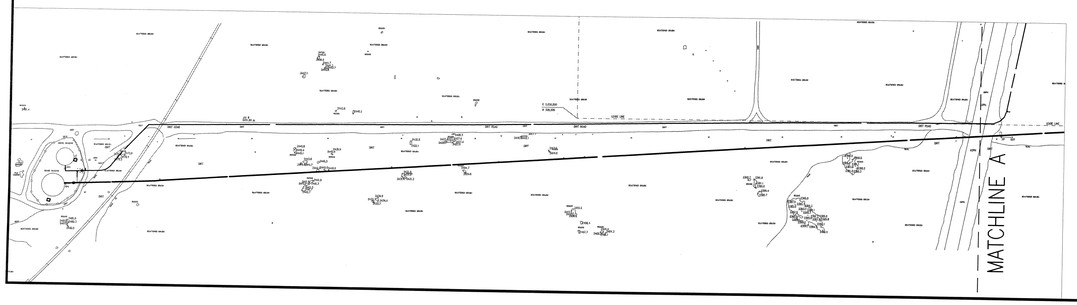

REGISTERED PROFESSIONAL ENGINEER
JONATHAN F. BERENCHI
NO. 60229
EXP. 6/30/12
CIVIL
STATE OF CALIFORNIA

JBY #0622-15

JB YOUNG & ASSOCIATES
CONSULTANT ENGINEERS
11440 RIVERSIDE DRIVE, SUITE M
LAKESIDE, CA 92040
619-448-9424
619-448-4690 (FAX)

DATE	SUB	DESCRIPTION	BY	A'PD
07/22/11	C	100% FINAL DESIGN		
06/30/11	B	95% NEAR-FINAL DESIGN		
01/31/11	A	30% PRELIMINARY DESIGN		

NATIONAL AERONAUTICS AND SPACE ADMINISTRATION
DRYDEN FLIGHT RESEARCH CENTER
EDWARDS, CA

DRAWING TITLE
EXISTING FIRE MAIN LAYOUT

PROJECT TITLE
REPAIR CENTER-WIDE FIRE MAINS
DESIGN SUBMITTAL "C"

APPROVALS	DATE
Chief, Facilities Engineering & Asset Mgmt. Office: Dan Cowley	2-1-12
Project Requestor/Customer: Dan Cowley	2-1-12
Facilities Project Manager: [signature]	1-31-12
Chief, Office of Protective Services: [signature]	02/01/12
Chief, Safety, Health and Environmental Office: [signature]	2-1-12
DFRC Chief Information Officer: P. Harrington	1 Feb 12

DATE STRTD	7/23/10	DATE PRNTD	7/22/11
DRAWN BY	JFB		EDM-1697
SCALE	AS NOTED	TRADE SH. No. T-3	
FILE NAME			SHEET No. 3 of 37

NEW UTILITY WORK LEGEND

– NEW PVC FIRE WATER PIPE

– EXISTING PVC FIRE WATER PIPE TO BE REMAIN (UNLESS OTHERWISE NOTED)

– PHASE BOUNDARY

PHASING NOTES:

A) ONE PHASE SHALL BE COMPLETELY FINISHED BEFORE CONSTRUCTION & DEMOLITION CAN START ON ANOTHER PHASE.
B) COMPLETION OF A PHASE SHALL INCLUDE ALL DEMOLITION AND NEW CONSTRUCTION WORK.
C) PHASING SHALL PROCEED IN SEQUENTIAL ORDER, UNLESS OTHERWISE DIRECTED BY THE CONTRACTING OFFICER.

MATCHLINE B

EXISTING DI FIRE WATER PIPE TO REMAIN

PHASE 3

EXISTING DI FIRE WATER PIPE TO REMAIN

PHASE 1

PHASE 7

PHASE 6

EXISTING CI FIRE WATER PIPE TO REMAIN

MATCHLINE B

FUTURE PVC FIRE WATER PIPE PER EDM-1703

PHASE 4

PHASE 2

MATCHLINE A

PHASE 5

MATCHLINE A

GRAPHIC SCALE: 1" = 200'

200' 0 200' 400' 600'

TRUE NORTH

REGISTERED PROFESSIONAL ENGINEER
JONATHAN B. YOUNG
No. 60229
EXP. 6/30/12
CIVIL
STATE OF CALIFORNIA

JBY #0622-15

JB YOUNG & ASSOCIATES
CONSULTANT ENGINEERS
11440 RIVERSIDE DRIVE, SUITE M
LAKESIDE, CA 92040
619-448-9424
619-448-4690 (FAX)

DATE	SUB	DESCRIPTION	BY	A'PD
07/22/11	C	100% FINAL DESIGN		
06/30/11	B	95% NEAR-FINAL DESIGN		
01/31/11	A	30% PRELIMINARY DESIGN		

NATIONAL AERONAUTICS AND SPACE ADMINISTRATION
DRYDEN FLIGHT RESEARCH CENTER
EDWARDS, CA

DRAWING TITLE

NEW FIRE MAIN LAYOUT & PHASING

PROJECT TITLE

REPAIR CENTER-WIDE FIRE MAINS
DESIGN SUBMITTAL "C"

APPROVALS	DATE
Chief, Facilities Engineering & Asset Mgmt. Office	
Project Requestor/Customer	2-1-12
Facilities Project Manager	2-1-12
Chief, Office of Protective Services	1-31-12
Chief - Safety, Health and Environmental Office	02/01/12
DFRC Chief Information Officer	2-1-12
	1 Feb 12

DATE STRTD	7/23/10	DATE PRNTD	7/22/11
DRAWN BY	JFB	TRADE SH. No.	EDM-1697
SCALE	AS NOTED		
FILE NAME		T-4	SHEET No. 4 of 37

(XX) NOTES:

1) INSTALL NEW DI PIPE TEE & TB (SIZE PER PLAN), SEE DETAIL 3 / C-13

2) REMOVE, DISPOSE AND REPLACE EXST VALVES IN VAULT, 20" DI PIPE PIPE RISER AND FLEX JOINT, SEE DETAIL 3 / C-17

3) INSTALL NEW ABOVE GROUND 24" FLEX PIPE CONNECTION & BFV, SEE DETAIL 1 / C-17

4) SANDBLAST & PAINT EXTERIOR OF EXISTING WATER TANK TO MATCH EXISTING COLOR, SEE DETAIL 1 / C-18

5) INSTALL NEW WATER METER AND VAULT ON 6" TANK FILL LINE, SEE DETAIL 2 / C-17

6) JACK NEW PIPE UNDER EXISTING RAILROAD TRACKS, PER SPEC'S.

7) REMOVE, DISPOSE, AND REPLACE EXISTING TANK CATHODIC PROTECTION SYSTEM AND PANEL, SEE SPECIFICATIONS.

8) INSTALL NEW ULTRASONIC LEVEL SENSOR AND CONTROL PANEL, SEE SPEC'S.

9) INSTALL NEW 20" PVC FIRE WATER PIPE, SEE DETAIL 1 / C-13

10) INSTALL NEW 20" 45° DI BEND AND THRUST BLOCK, SEE DETAIL 3 / C-13

11) DEFLECT PIPE AS REQUIRED.

12) ABANDON EXISTING FIRE WATER PIPE IN PLACE.

13) CLOSE VALVE. REMOVE AND DISPOSE OF VALVE WELL AND CONC COLLAR IN DIRT AND ASPH PVMT AREAS. GRADE TO MATCH EXST IN DIRT AREAS. INSTALL ASPHALT PATCH IN ASPH PVMT AREAS. REMOVE VALVE COVER AND FILL WITH CONC IN CONC PVMT AREAS.

14) INSTALL NEW 20" 22.5° DI BEND AND THRUST BLOCK. DEFLECT PIPE AS REQUIRED. SEE DETAIL 3 / C-13

15) INSTALL NEW TAPPING SADDLE AND TB (SIZE PER PLAN), SEE DETAIL 3 / C-13

16) INSTALL NEW 8" GATE VALVE, SEE DETAIL 2 / C-13

17) INSTALL NEW DI PIPE REDUCER (SIZE PER PLAN).

18) REMOVE SECTION OF 8" PIPE. INSTALL (2) NEW 8" 45° BENDS WITH THRUST BLOCKS. INSTALL NEW 8" PVC PIPE. CONNECT TO EXISTING PIPE 3' CLEAR OF BUILDING WITH NEW ADAPTER COUPLING. SEE DETAIL 3 / C-13

19) INSTALL NEW 8" 22.5° BEND WITH TB, SEE DETAIL 3 / C-13

20) INSTALL NEW 8" 45° BEND WITH TB, SEE DETAIL 3 / C-13

21) INSTALL 6" GATE VALVE, 6" PVC PIPE, AND FIRE HYDRANT, SEE DETAIL 4 / C-13

22) CUT & CAP OR PLUG EXISTING PIPE, SEE DETAIL 1 / C-14
REMOVE AND DISPOSE OF UNUSED PIPE SECTION.

23) INSTALL NEW 8" PVC PIPE, SEE DETAIL 1 / C-13

24) INSTALL NEW 6" PVC PIPE, SEE DETAIL 1 / C-13

25) INSTALL NEW 6" 45° BEND WITH TB, SEE DETAIL 3 / C-13
DEFLECT PIPE AS REQUIRED.

26) INSTALL NEW 6" 22.5° BEND WITH TB, SEE DETAIL 3 / C-13
DEFLECT PIPE AS REQUIRED.

27) INSTALL NEW 6" 90° BEND WITH TB, SEE DETAIL 3 / C-13

28) REMOVE SECTION OF 6" PIPE. INSTALL (2) NEW 6" 45° BENDS WITH THRUST BLOCKS. INSTALL NEW 6" PVC PIPE. CONNECT TO EXISTING PIPE 3' CLEAR OF BUILDING WITH NEW ADAPTER COUPLING. SEE DETAIL 3 / C-13

29) REMOVE AND DISPOSE OF EXISTING FIRE HYDRANT AND RISER PIPE. CAP OR PLUG PIPE A MINIMUM OF 24" BELOW FINISHED GRADE. GRADE SITE TO MATCH EXST. IN PAVED AREAS, REPAIR ASPHALT OR CONC PVMT TO MATCH EXISTING.

30) REMOVE AND DISPOSE OF POST INDICTOR ASSEMBLY. CLOSE EXISTING VALVE. GRADE SITE TO MATCH EXST. IN PAVED AREAS, REPAIR ASPHALT OR CONC PVMT TO MATCH EXISTING.

31) REMOVE AND DISPOSE OF GUARD POST. GRADE SITE TO MATCH EXST. IN PAVED AREAS, REPAIR ASPHALT OR CONC PVMT TO MATCH EXISTING.

32) SAWCUT, REMOVE, DISPOSE AND REPLACE ASPHALT PAVEMENT, SEE DETAIL 1 / C-13

33) SAWCUT, REMOVE, DISPOSE AND REPLACE 8" THICK CONC PAVEMENT, SEE DETAIL 2 / C-14

34) INSTALL NEW 20" 11.25° DI BEND AND THRUST BLOCK. DEFLECT PIPE AS REQUIRED. SEE DETAIL 3 / C-13

35) SAWCUT, REMOVE, DISPOSE AND REPLACE V-DITCH CHANNEL PAVEMENT, SEE DETAIL 7 / C-14

36) SAWCUT, REMOVE, DISPOSE AND REPLACE 16" THICK CONC PAVEMENT, SEE DETAIL 1 / C-15

37) INSTALL NEW CHECK VALVE, GATE VALVE, PIV AND FDC, IN EXISTING VAULT (1)

38) EXST FIRE HYDRANT TO REMAIN.

39) CONNECT TO EXISTING PIPE WITH ADAPTER COUPLING.

40) REMOVE AND DISPOSE OF CONCRETE VAULT, SEE DETAIL 4 / C-15

41) INSTALL NEW 10" PVC PIPE, SEE DETAIL 1 / C-13

42) INSTALL NEW 6" GATE VALVE, SEE DETAIL 2 / C-13

43) INSTALL NEW 6" 11.25° BEND WITH TB, SEE DETAIL 3 / C-13

44) INSTALL NEW 8" 11.25° BEND WITH TB, SEE DETAIL 3 / C-13

45) REMOVE AND DISPOSE OF EXST GV INSIDE VAULT.
REMOVE, DISPOSE, AND REPLACE EXST 6" CHECK VALVE INSIDE VAULT.
INSTALL NEW 6" PIPE SPOOL AND ADAPTER COUPLINGS.
EXST FIRE DEPARTMENT CONNECTION (FDC) & VAULT TO REMAIN.

46) INSTALL NEW 10" GATE VALVE, SEE DETAIL 2 / C-13

47) INSTALL NEW POST INDICATOR, SEE DETAIL 4 / C-13

48) INSTALL NEW 20" BUTTERFLY VALVE, SEE DETAIL 2 / C-13

49) INSTALL NEW 10" 90° BEND WITH TB, SEE DETAIL 3 / C-13

50) INSTALL NEW 10" 45° BEND WITH TB, SEE DETAIL 3 / C-13

51) INSTALL NEW 10" 22.5° BEND WITH TB, SEE DETAIL 3 / C-13

52) RELOCATE EXISTING WALL MOUNTED FIRE DEPARTMENT CONNECTION, SEE DETAIL 4 / C-16

53) SAWCUT, REMOVE, DISPOSE AND REPLACE CONC SWALE, SEE DETAIL 6 / C-14

54) INSTALL NEW BLIND FLANGE TO MATCH NEW PIPE SIZE AND TB, SEE DETAIL 3 / C-13

55) SAWCUT, REMOVE, DISPOSE AND REPLACE CONC SIDEWALK, SEE DETAIL 8 / C-14

56) INSTALL NEW 16" BUTTERFLY VALVE, SEE DETAIL 2 / C-13

57) PROTECT EXISTING FENCING IN PLACE.

58) INSTALL NEW 20" 90° DI BEND AND THRUST BLOCK, SEE DETAIL 3 / C-13

59) SAWCUT, REMOVE, DISPOSE AND REPLACE CONC CURB & GUTTER TO MATCH EXISTING, SEE DETAIL 4 / C-14

60) INSTALL NEW 12" PVC PIPE, SEE DETAIL 1 / C-13

61) INSTALL NEW 12" GATE VALVE, SEE DETAIL 2 / C-13

62) INSTALL NEW 12" 90° BEND WITH TB, SEE DETAIL 3 / C-13

63) INSTALL NEW 16" PVC PIPE, SEE DETAIL 1 / C-13

64) CUT, REMOVE, AND DISPOSE OF SECTION OF PIPE.

65) INSTALL NEW 10" 11.25° BEND WITH TB, SEE DETAIL 3 / C-13

66) INSTALL NEW PIPING UNDER EXISTING CONCRETE UTILITY TRENCH OR GRATED CONC CHANNEL, TO REMAIN. PROTECT AS REQUIRED.

67) INSTALL NEW BLIND FLANGE AND THRUST BLOCK FOR FUTURE EXTENSION, SEE DETAIL 3 / C-13

68) REMOVE, DISPOSE, AND REPLACE GUARD POST, SEE DETAIL 7 / C-13

69) INSTALL NEW DI CROSS (SIZE PER PLAN).

70) INSTALL NEW 12" 45° BEND WITH TB, SEE DETAIL 3 / C-13

71) INSTALL NEW 12" 22.5° BEND WITH TB, SEE DETAIL 3 / C-13

72) REMOVE, DISPOSE, AND REPLACE FLOW METER, SEE DETAIL 3 / C-16

73) JACK PIPING UNDER EXISTING 8' TALL CMU BLOCK SCREEN WALL AND CONC FOOTING

74) INSTALL NEW 20" PVC TANK SUCTION PIPE, 12" PVC RE-CIRCULATION PIPE, AND 6" PVC TANK FILL PIPE, SEE DETAIL 1 / C-13

75) CONNECT THE (3) NEW PIPES TO NEW BLDG 4840 SPRINKLER ROOM, SEE DETAIL 3 / C-19

76) INSTALL NEW 20", 12" & 6" 90° RESTRAINED JOINT DI BENDS.

77) NEW 50,000 GALLON BOLTED STEEL TANK, SEE DETAIL 1 / C-19

78) INSTALL NEW 20", 12" & 6" 45° RESTRAINED JOINT DI BENDS.

79) INSTALL NEW 16" 45° BEND WITH TB, SEE DETAIL 3 / C-13

80) INSTALL NEW 18" PVC PIPE, SEE DETAIL 1 / C-13

81) INSTALL NEW 18" BUTTERFLY VALVE, SEE DETAIL 2 / C-13

82) REMOVE, DISPOSE, AND REPLACE EXISTING 18" PRV, SEE DETAIL 2 / C-16
MATCH EXISTING PRV SETTINGS.

83) CONNECT TO EXISTING FIRE SERVICE RISER INSIDE BLDG, SEE DETAIL 2 / C-19

84) INSTALL NEW 4" RPBP ON DOMESTIC WATER SERVICE, SEE DETAIL 5 / C-15

85) REMOVE AND DISPOSE OF DOMESTIC WATER 4" RPBP INSIDE VAULT.
REPLACE WITH 4" DI PIPE SPOOL.
REMOVE, DISPOSE, AND REPLACE 6" FIRE WATER FILL ALTITUDE VALVE INSIDE VAULT.
NEW ALTITUDE VALVE SHALL BE CONTROLLED BY NEW TANK LEVEL SENSING SYSTEM.

86) INSTALL NEW 16" 90° BEND WITH TB, SEE DETAIL 3 / C-13

87) INSTALL NEW 3" GATE VALVE, SEE DETAIL 2 / C-13

88) INSTALL NEW 3" PVC PIPE, SEE DETAIL 1 / C-13

89) SAWCUT, REMOVE, AND DISPOSE OF 12" WIDE STRIP OF ASPHALT PAVEMENT TO PROVIDE A CLEAN EDGE.

90) INSTALL NEW ASPHALT PAVEMENT, SEE DETAIL 5 / C-17

91) REMOVE, SALVAGE, AND REPLACE SIGN TO MATCH EXST.

92) CUT, REMOVE & DISPOSE OF PORTION OF EXST 5' TALL WROUGHT IRON FENCE.
INSTALL NEW LOCKABLE 3' WIDE X 5' TALL WROUGHT IRON SWING GATE TO MATCH EXST.

93) REMOVE, DISPOSE, AND REPLACE 30" TANK OUTLET BUTTERFLY VALVE, INSULATION W/ ALUMINUM COVER, AND TAMPER SWITCH.

REGISTERED PROFESSIONAL ENGINEER — JONATHAN F. BERRY — NO. 60229 — EXP. 6/30/12 — CIVIL — STATE OF CALIFORNIA

JBY #0622-15

JB YOUNG & ASSOCIATES
CONSULTANT ENGINEERS
11440 RIVERSIDE DRIVE, SUITE M
LAKESIDE, CA 92040
619-448-9424
619-448-4690 (FAX)

DATE	SUB	DESCRIPTION	BY	A'PD
05/10/12		NASA EDITS – DELTA 1 (1)	TSS	TSS
07/22/11	C	100% FINAL DESIGN		
06/30/11	B	95% NEAR-FINAL DESIGN		
01/31/11	A	30% PRELIMINARY DESIGN		

NATIONAL AERONAUTICS AND SPACE ADMINISTRATION
DRYDEN FLIGHT RESEARCH CENTER
EDWARDS, CA

DRAWING TITLE
PROJECT WORK NOTES

PROJECT TITLE
REPAIR CENTER-WIDE FIRE MAINS
DESIGN SUBMITTAL "C"

APPROVALS	DATE
Chief - Facilities Engineering & Asset Mgmt. Office: Dan Crowley	5-10-12
Project Requestor/Customer: Dan Crowley	5-10-12
Facilities Project Manager	5-10-12
Chief, Office of Protective Services	5/10/12
Chief - Safety, Health and Environmental Office: Dorothy Frazier	5/10/12
DFRC Chief Information Officer: P. Hammington	10 May 12

DATE STRTD	7/23/10	DATE PRNTD	7/22/11
DRAWN BY	JFB		EDM-1697
SCALE	AS NOTED	TRADE SH. No.	T-5
FILE NAME		SHEET No.	5 of 37

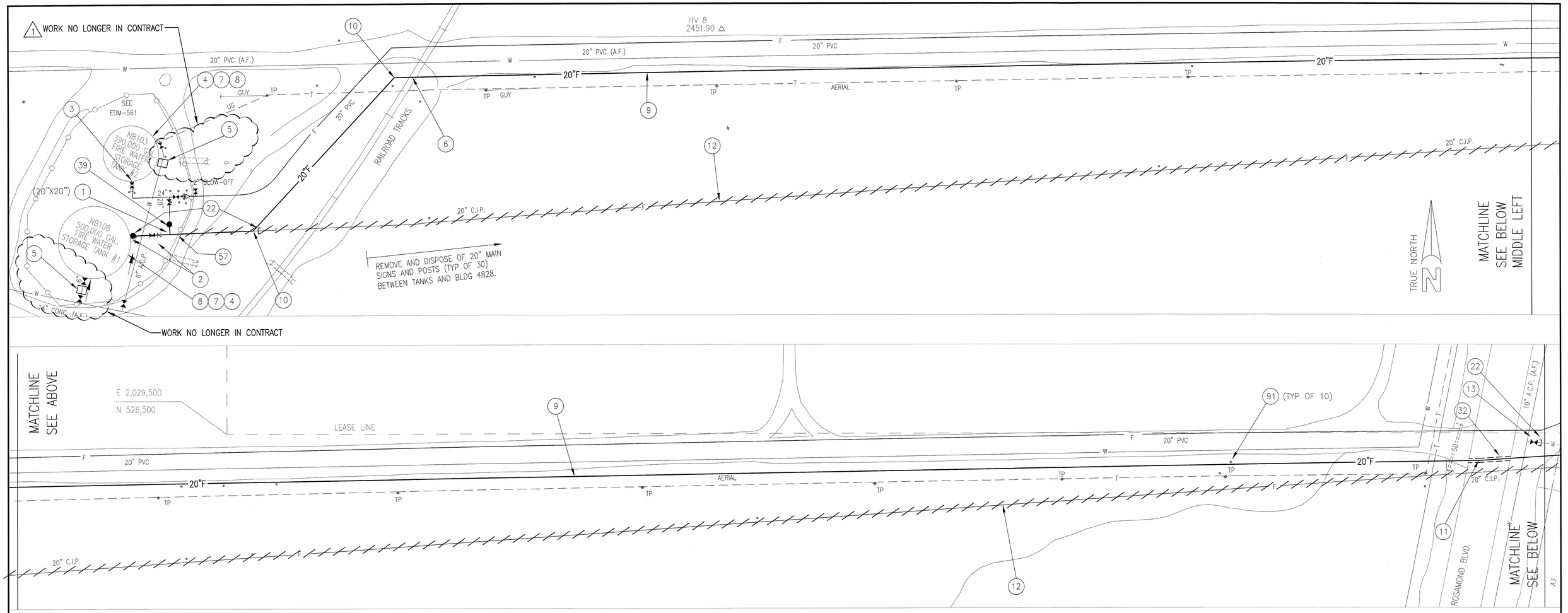

GRAPHIC SCALE: 1" = 40'

40' 0 40' 80' 120'

GENERAL NOTE: FOR UTILITY WORK LEGEND SEE DRAWING T-2.

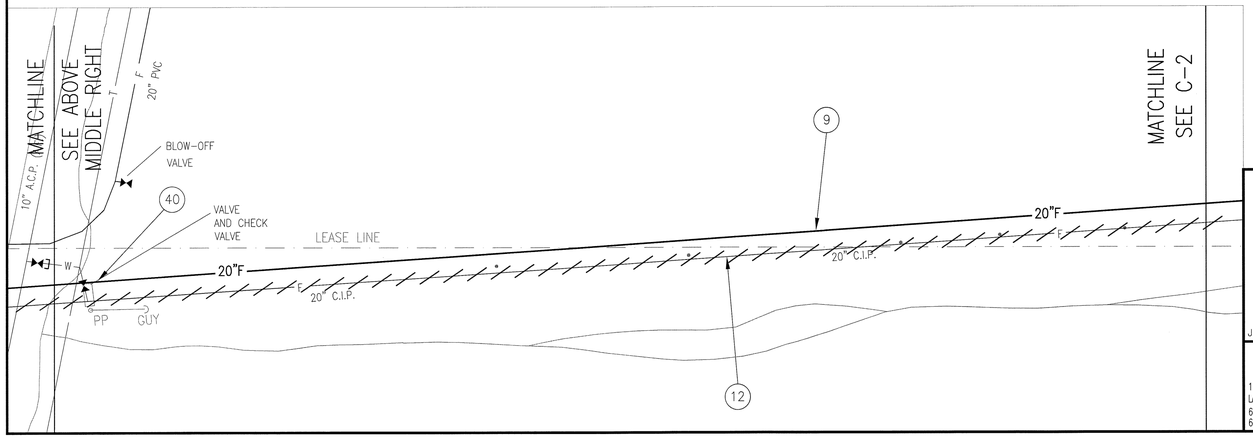

(XX) NOTES:

1) INSTALL NEW DI PIPE TEE & TB (SIZE PER PLAN), SEE DETAIL 3 C-1 | C-13
2) REMOVE, DISPOSE AND REPLACE EXST VALVES IN VAULT, 20" DI PIPE PIPE RISER AND FLEX JOINT, SEE DETAIL 3 C-1 | C-17
3) INSTALL NEW ABOVE GROUND 24" FLEX PIPE CONNECTION & BFV, SEE DETAIL 1 C-1 | C-17
4) SANDBLAST & PAINT EXTERIOR OF EXISTING WATER TANK TO MATCH EXISTING COLOR, SEE DETAIL 1 C-1 | C-18
5) INSTALL NEW WATER METER AND VAULT ON 6" TANK FILL LINE, SEE DETAIL 2 C-1 | C-17
6) JACK NEW PIPE UNDER EXISTING RAILROAD TRACKS, PER SPEC'S.
7) REMOVE, DISPOSE, AND REPLACE EXISTING TANK CATHODIC PROTECTION SYSTEM AND PANEL, SEE SPECIFICATIONS.
8) INSTALL NEW ULTRASONIC LEVEL SENSOR AND CONTROL PANEL, SEE SPEC'S.
9) INSTALL NEW 20" PVC FIRE WATER PIPE, SEE DETAIL 1 C-1 | C-13
10) INSTALL NEW 20" DI 45° BEND AND THRUST BLOCK, SEE DETAIL 3 C-1 | C-13
11) DEFLECT PIPE AS REQUIRED.
12) ABANDON EXISTING FIRE WATER PIPE IN PLACE.
13) CLOSE VALVE. REMOVE AND DISPOSE OF VALVE WELL AND CONC COLLAR IN DIRT AND ASPH PVMT AREAS. GRADE TO MATCH EXST IN DIRT AREAS. INSTALL ASPHALT PATCH IN ASPH PVMT AREAS. REMOVE VALVE COVER AND FILL WITH CONC IN CONC PVMT AREAS.
22) CUT & CAP OR PLUG EXISTING PIPE, SEE DETAIL 1 C-1 | C-14
REMOVE AND DISPOSE OF UNUSED PIPE SECTION.
32) SAWCUT, REMOVE, DISPOSE AND REPLACE ASPHALT PAVEMENT, SEE DETAIL 1 C-1 | C-13
39) CONNECT TO EXISTING PIPE WITH ADAPTER COUPLING.
40) REMOVE AND DISPOSE OF CONCRETE VAULT, SEE DETAIL 4 C-1 | C-15
57) PROTECT EXISTING FENCING IN PLACE.
91) REMOVE, SALVAGE, AND REPLACE SIGN TO MATCH EXST.

REGISTERED PROFESSIONAL ENGINEER JONATHAN F. BERNARD YOUNG NO. 60229 EXP. 6/30/12 CIVIL STATE OF CALIFORNIA

JBY #0622-15

JB YOUNG & ASSOCIATES
CONSULTANT ENGINEERS
11440 RIVERSIDE DRIVE, SUITE M
LAKESIDE, CA 92040
619-448-9424
619-448-4690 (FAX)

DATE	SUB	DESCRIPTION	BY	A'PD
05/10/12		NASA EDITS - DELTA 1 (1)	TSS	TSS
07/22/11	C	100% FINAL DESIGN		
06/30/11	B	95% NEAR-FINAL DESIGN		
01/31/11	A	30% PRELIMINARY DESIGN		

NATIONAL AERONAUTICS AND SPACE ADMINISTRATION
DRYDEN FLIGHT RESEARCH CENTER
EDWARDS, CA

DRAWING TITLE
UTILITY PLAN #1

PROJECT TITLE
REPAIR CENTER-WIDE FIRE MAINS
DESIGN SUBMITTAL "C"

APPROVALS	DATE
Chief, Facilities Engineering & Asset Mgmt. Office: Dan Cowly	5-10-12
Project Requestor/Customer: Dan Cowly	5-10-12
Facilities Project Manager	5-10-12
Chief, Office of Initiative Services	5/10/12
Chief - Safety, Health and Environmental Office: Stephen Morgan	5-10-12
DFRC Chief Information Officer: T. Harrington	10May12

DATE STRTD	7/22/10	DATE PRNTD	7/22/11
DRAWN BY	JFB		EDM-1697
SCALE	AS NOTED	TRADE Sh. No.	C-1
FILE NAME			SHEET No. 6 of 37

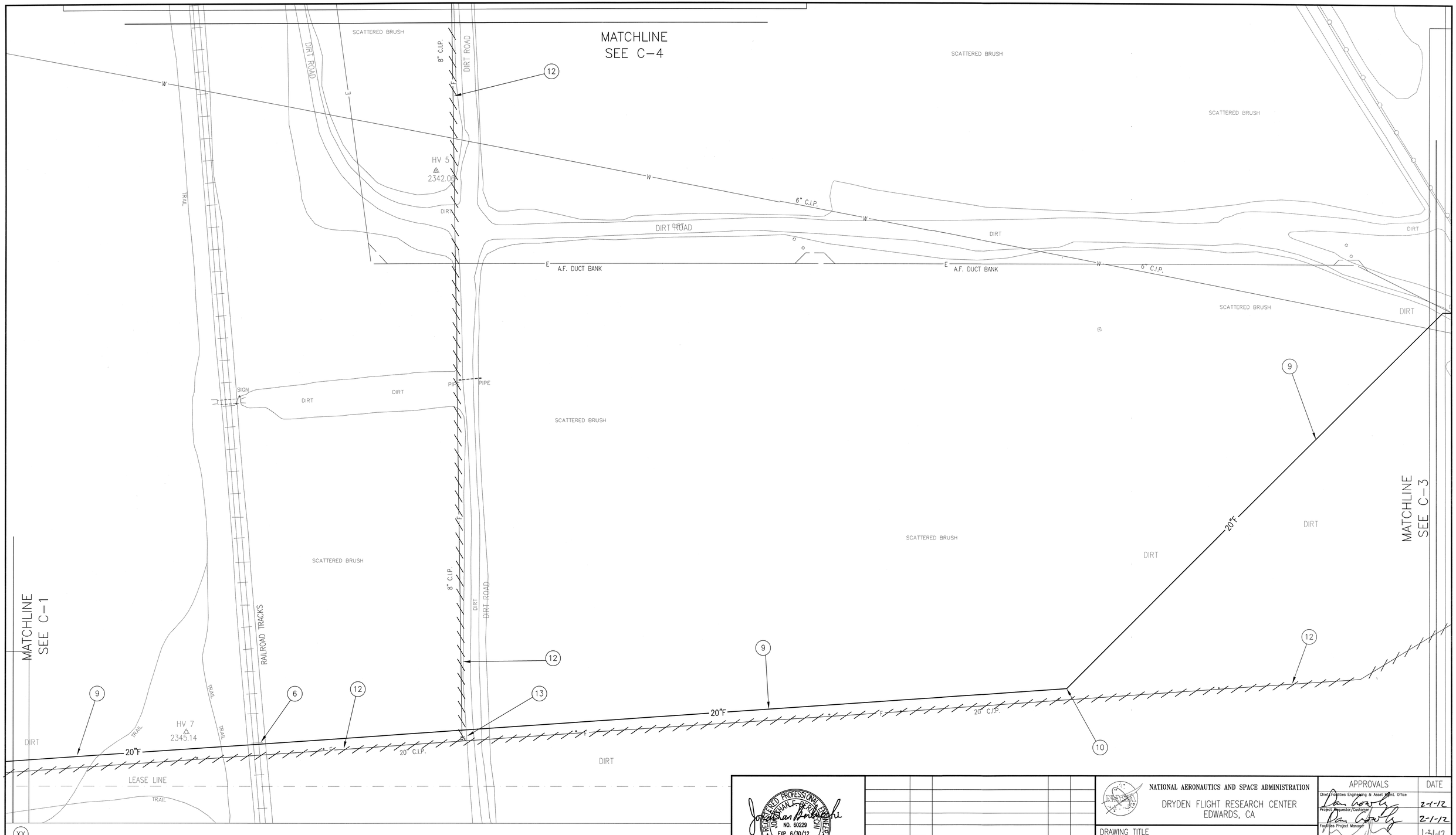

(XX) NOTES:

6) JACK NEW PIPE UNDER EXISTING RAILROAD TRACKS PER SPEC'S.

9) INSTALL NEW 20" PVC FIRE WATER PIPE, SEE DETAIL 1 / C-2 | C-13

10) INSTALL NEW 20" 45° DI BEND AND THRUST BLOCK.
DEFLECT PIPE AS REQUIRED. SEE DETAIL 3 / C-2 | C-13

12) ABANDON EXISTING FIRE WATER PIPE IN PLACE.

13) CLOSE VALVE. REMOVE AND DISPOSE OF VALVE WELL AND CONC COLLAR IN DIRT AND ASPH PVMT AREAS. GRADE TO MATCH EXST IN DIRT AREAS. INSTALL ASPHALT PATCH IN ASPH PVMT AREAS. REMOVE VALVE COVER AND FILL WITH CONC IN CONC PVMT AREAS.

GENERAL NOTE: FOR UTILITY WORK LEGEND SEE DRAWING T-2.

GRAPHIC SCALE: 1" = 40'

40' 0 40' 80' 120'

TRUE NORTH

REGISTERED PROFESSIONAL ENGINEER — JOHN F. HANLEY BERNARD — No. 60229 — EXP. 6/30/12 — CIVIL — STATE OF CALIFORNIA

JBY #0622-15

JB YOUNG & ASSOCIATES
CONSULTANT ENGINEERS
11440 RIVERSIDE DRIVE, SUITE M
LAKESIDE, CA 92040
619-448-9424
619-448-4690 (FAX)

DATE	SUB	DESCRIPTION	BY	A'PD
07/22/11	C	100% FINAL DESIGN		
06/30/11	B	95% NEAR-FINAL DESIGN		
01/31/11	A	30% PRELIMINARY DESIGN		

NATIONAL AERONAUTICS AND SPACE ADMINISTRATION
DRYDEN FLIGHT RESEARCH CENTER
EDWARDS, CA

DRAWING TITLE

UTILITY PLAN #2

PROJECT TITLE

REPAIR CENTER-WIDE FIRE MAINS
DESIGN SUBMITTAL "C"

APPROVALS	DATE
Chief, Facilities Engineering & Asset Mgmt. Office	2-1-12
Project Inspector/Customer	2-1-12
Facilities Project Manager	1-31-12
Chief, Office of Protective Services	02/01/12
Chief - Safety, Health and Environmental Office	2-1-12
DFRC Chief Information Officer	1 Feb 12

DATE STRTD	7/23/10	DATE PRNTD	7/22/11
DRAWN BY	JFB		
SCALE	AS NOTED	TRADE SH. No.	C-2
FILE NAME			EDM-1697
		SHEET No.	7 of 37

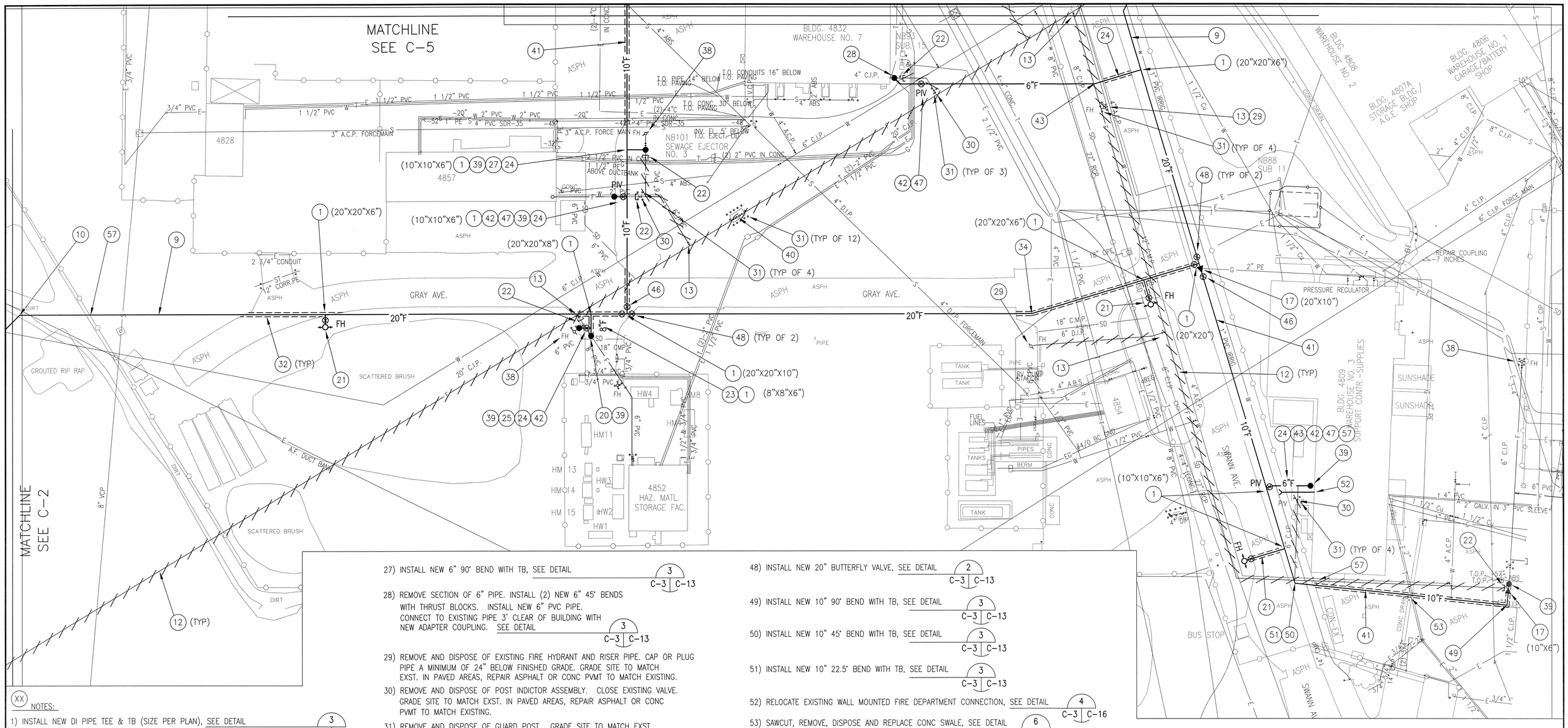

GENERAL NOTE: FOR UTILITY WORK LEGEND SEE DRAWING T-2.

GRAPHIC SCALE: 1" = 40'

40' 0 40' 80' 120'

TRUE NORTH

(XX) NOTES:

1) INSTALL NEW DI PIPE TEE & TB (SIZE PER PLAN), SEE DETAIL 3 C-3 | C-13
9) INSTALL NEW 20" PVC FIRE WATER PIPE, SEE DETAIL 1 C-3 | C-13
10) INSTALL NEW 20" 45° DI BEND AND THRUST BLOCK, SEE DETAIL 3 C-3 | C-13
12) ABANDON EXISTING FIRE WATER PIPE IN PLACE.
13) CLOSE VALVE. REMOVE AND DISPOSE OF VALVE WELL AND CONC COLLAR IN DIRT AND ASPH PVMT AREAS. GRADE TO MATCH EXST IN DIRT AREAS. INSTALL ASPHALT PATCH IN ASPH PVMT AREAS. REMOVE VALVE COVER AND FILL WITH CONC IN CONC PVMT AREAS.
17) INSTALL NEW DI PIPE REDUCER (SIZE PER PLAN).
20) INSTALL NEW 8" 45° BEND WITH TB, SEE DETAIL 3 C-3 | C-13
21) INSTALL 6" GATE VALVE, 6" PVC PIPE, AND FIRE HYDRANT, SEE DETAIL 4 C-3 | C-13
22) CUT & CAP OR PLUG EXISTING PIPE, SEE DETAIL 1 C-3 | C-14
REMOVE AND DISPOSE OF UNUSED PIPE SECTION.
23) INSTALL NEW 8" PVC PIPE, SEE DETAIL 1 C-3 | C-13
24) INSTALL NEW 6" PVC PIPE, SEE DETAIL 1 C-3 | C-13
25) INSTALL NEW 6" 45° BEND WITH TB, SEE DETAIL 3 C-3 | C-13
DEFLECT PIPE AS REQUIRED.
27) INSTALL NEW 6" 90° BEND WITH TB, SEE DETAIL 3 C-3 | C-13
28) REMOVE SECTION OF 6" PIPE. INSTALL (2) NEW 6" 45° BENDS WITH THRUST BLOCKS. INSTALL NEW 6" PVC PIPE. CONNECT TO EXISTING PIPE 3' CLEAR OF BUILDING WITH NEW ADAPTER COUPLING. SEE DETAIL 3 C-3 | C-13
29) REMOVE AND DISPOSE OF EXISTING FIRE HYDRANT AND RISER PIPE. CAP OR PLUG PIPE A MINIMUM OF 24" BELOW FINISHED GRADE. GRADE SITE TO MATCH EXST. IN PAVED AREAS, REPAIR ASPHALT OR CONC PVMT TO MATCH EXISTING.
30) REMOVE AND DISPOSE OF POST INDICTOR ASSEMBLY. CLOSE EXISTING VALVE. GRADE SITE TO MATCH EXST. IN PAVED AREAS, REPAIR ASPHALT OR CONC PVMT TO MATCH EXISTING.
31) REMOVE AND DISPOSE OF GUARD POST. GRADE SITE TO MATCH EXST. IN PAVED AREAS, REPAIR ASPHALT OR CONC PVMT TO MATCH EXISTING.
32) SAWCUT, REMOVE, DISPOSE AND REPLACE ASPHALT PAVEMENT, SEE DETAIL 1 C-3 | C-13
34) INSTALL NEW 20" 11.25° DI BEND AND THRUST BLOCK, SEE DETAIL 3 C-3 | C-13
DEFLECT PIPE AS REQUIRED.
38) EXST FIRE HYDRANT TO REMAIN.
39) CONNECT TO EXISTING PIPE WITH ADAPTER COUPLING.
40) REMOVE AND DISPOSE OF CONCRETE VAULT, SEE DETAIL 4 C-3 | C-15
41) INSTALL NEW 10" PVC PIPE, SEE DETAIL 1 C-3 | C-13
42) INSTALL NEW 6" GATE VALVE, SEE DETAIL 2 C-3 | C-13
43) INSTALL NEW 6" 11.25° BEND WITH TB, SEE DETAIL 3 C-3 | C-13
46) INSTALL NEW 10" GATE VALVE, SEE DETAIL 2 C-3 | C-13
47) INSTALL NEW POST INDICATOR, SEE DETAIL 5 C-3 | C-13
48) INSTALL NEW 20" BUTTERFLY VALVE, SEE DETAIL 2 C-3 | C-13
49) INSTALL NEW 10" 90° BEND WITH TB, SEE DETAIL 3 C-3 | C-13
50) INSTALL NEW 10" 45° BEND WITH TB, SEE DETAIL 3 C-3 | C-13
51) INSTALL NEW 10" 22.5° BEND WITH TB, SEE DETAIL 3 C-3 | C-13
52) RELOCATE EXISTING WALL MOUNTED FIRE DEPARTMENT CONNECTION, SEE DETAIL 4 C-3 | C-16
53) SAWCUT, REMOVE, DISPOSE AND REPLACE CONC SWALE, SEE DETAIL 6 C-3 | C-14
57) PROTECT EXISTING FENCING IN PLACE.

REGISTERED PROFESSIONAL ENGINEER
JONATHAN F. BERKOWITZ
NO. 60229
EXP. 6/30/12
CIVIL
STATE OF CALIFORNIA

JBY #0622-15

JB YOUNG & ASSOCIATES
CONSULTANT ENGINEERS
11440 RIVERSIDE DRIVE, SUITE M
LAKESIDE, CA 92040
619-448-9424
619-448-4690 (FAX)

DATE	SUB	DESCRIPTION	BY	A'PD
07/22/11	C	100% FINAL DESIGN		
06/30/11	B	95% NEAR-FINAL DESIGN		
01/31/11	A	30% PRELIMINARY DESIGN		

NATIONAL AERONAUTICS AND SPACE ADMINISTRATION
DRYDEN FLIGHT RESEARCH CENTER
EDWARDS, CA

DRAWING TITLE
UTILITY PLAN #3

PROJECT TITLE
REPAIR CENTER-WIDE FIRE MAINS
DESIGN SUBMITTAL "C"

APPROVALS	DATE
Chief, Facilities Engineering & Asset Mgmt. Office	2-1-12
Project Requestor/Customer	2-1-12
Facilities Project Manager	1-31-12
Chief, Office of Protective Services	02/01/12
Chief - Safety, Health and Environmental Office	2-1-12
OFRC Chief Information Officer	1 Feb 12

DATE STRTD	7/23/10	DATE PRNTD	7/22/11
DRAWN BY	JFB		EDM-1697
SCALE	AS NOTED	TRADE SH. No.	C-3
FILE NAME		SHEET No.	8 of 37

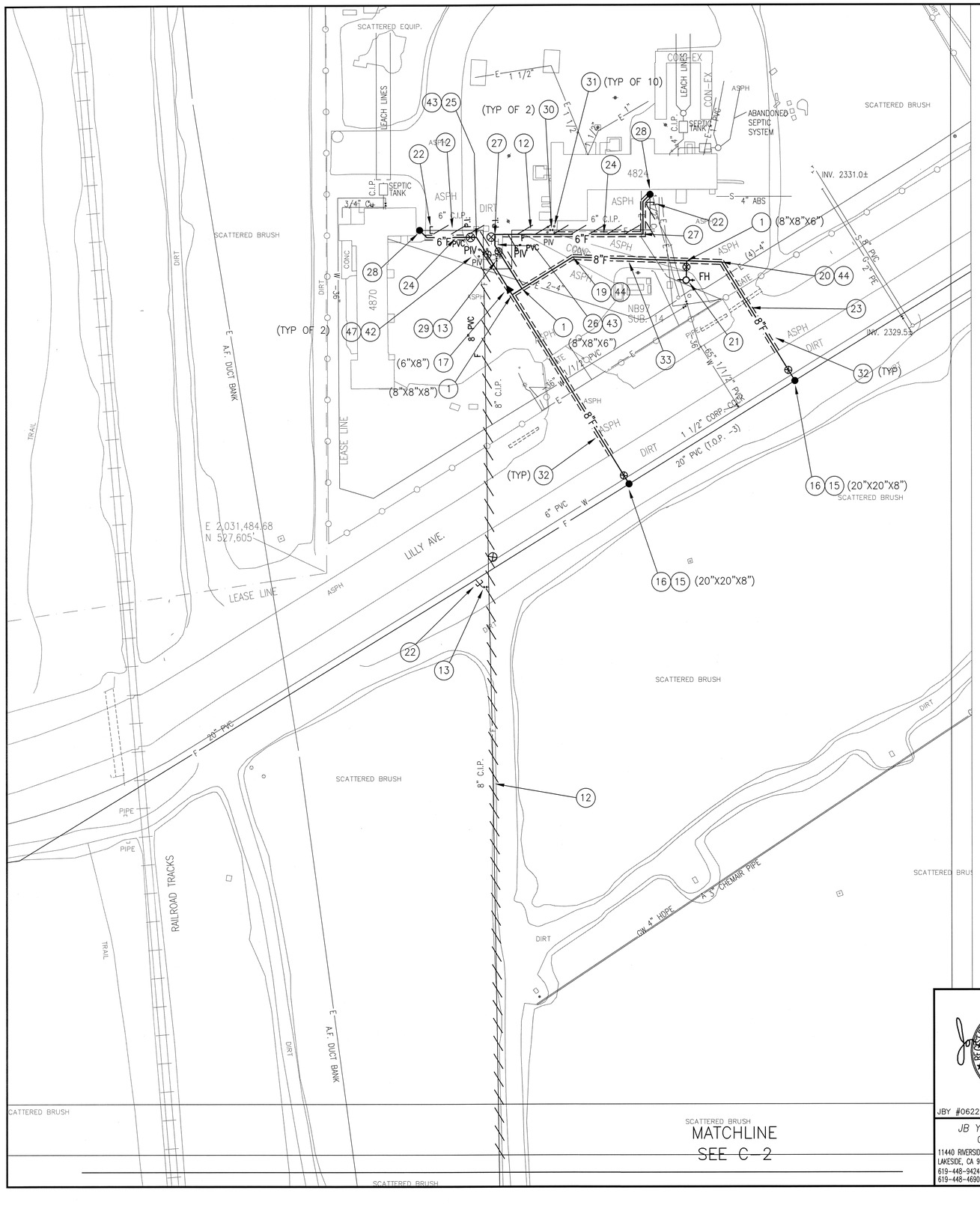

XX NOTES:

1) INSTALL NEW DI PIPE TEE & TB (SIZE PER PLAN), SEE DETAIL 3 C-4 | C-13

12) ABANDON EXISTING FIRE WATER PIPE IN PLACE.

13) CLOSE VALVE. REMOVE AND DISPOSE OF VALVE WELL AND CONC COLLAR IN DIRT AND ASPH PVMT AREAS. GRADE TO MATCH EXST IN DIRT AREAS. INSTALL ASPHALT PATCH IN ASPH PVMT AREAS. REMOVE VALVE COVER AND FILL WITH CONC IN CONC PVMT AREAS.

15) INSTALL NEW TAPPING SADDLE AND TB (SIZE PER PLAN), SEE DETAIL 3 C-4 | C-13

16) INSTALL NEW 8" GATE VALVE, SEE DETAIL 2 C-4 | C-13

17) INSTALL NEW DI REDUCER (SIZE PER PLAN).

19) INSTALL NEW 8" 22.5° BEND WITH TB, SEE DETAIL 3 C-4 | C-13

20) INSTALL NEW 8" 45° BEND WITH TB, SEE DETAIL 3 C-4 | C-13

21) INSTALL NEW 8"X6" DI TEE, 6" GATE VALVE, 6" PVC PIPE, AND FIRE HYDRANT, SEE DETAIL 4 C-4 | C-13

22) CUT & CAP OR PLUG EXISTING PIPE, SEE DETAIL 1 C-4 | C-14
REMOVE AND DISPOSE OF UNUSED PIPE SECTION.

23) INSTALL NEW 8" PVC PIPE, SEE DETAIL 1 C-4 | C-13

24) INSTALL NEW 6" PVC PIPE, SEE DETAIL 1 C-4 | C-13

25) INSTALL NEW 6" 45° BEND WITH TB, SEE DETAIL 3 C-4 | C-13
DEFLECT PIPE AS REQUIRED.

26) INSTALL NEW 6" 22.5° BEND WITH TB, SEE DETAIL 3 C-4 | C-13
DEFLECT PIPE AS REQUIRED.

27) INSTALL NEW 6" 90° BEND WITH TB, SEE DETAIL 3 C-4 | C-13

28) REMOVE SECTION OF 6" PIPE. INSTALL (2) NEW 6" 45° BENDS WITH THRUST BLOCKS. INSTALL NEW 6" PVC PIPE. CONNECT TO EXISTING PIPE 3' CLEAR OF BUILDING WITH NEW ADAPTER COUPLING. SEE DETAIL 3 C-4 | C-13

29) REMOVE AND DISPOSE OF EXISTING FIRE HYDRANT AND RISER PIPE. CAP OR PLUG PIPE A MINIMUM OF 24" BELOW FINISHED GRADE. GRADE SITE TO MATCH EXST. IN PAVED AREAS, REPAIR ASPHALT OR CONC PVMT TO MATCH EXISTING.

30) REMOVE AND DISPOSE OF POST INDICTOR ASSEMBLY. CLOSE EXISTING VALVE. GRADE SITE TO MATCH EXST. IN PAVED AREAS, REPAIR ASPHALT OR CONC PVMT TO MATCH EXISTING.

31) REMOVE AND DISPOSE OF GUARD POST. GRADE SITE TO MATCH EXST. IN PAVED AREAS, REPAIR ASPHALT OR CONC PVMT TO MATCH EXISTING.

32) SAWCUT, REMOVE, DISPOSE AND REPLACE ASPHALT PAVEMENT, SEE DETAIL 1 C-4 | C-13

33) SAWCUT, REMOVE, DISPOSE AND REPLACE 8" THICK CONC PAVEMENT, SEE DETAIL 2 C-4 | C-14

42) INSTALL NEW 6" GATE VALVE, SEE DETAIL 2 C-4 | C-13

43) INSTALL NEW 6" 11.25° BEND WITH TB, SEE DETAIL 3 C-4 | C-13

44) INSTALL NEW 8" 11.25° BEND WITH TB, SEE DETAIL 3 C-4 | C-13

47) INSTALL NEW POST INDICATOR, SEE DETAIL 5 C-4 | C-13

GRAPHIC SCALE: 1" = 40'
40' 0 40' 80' 120'

TRUE NORTH

GENERAL NOTE: FOR UTILITY WORK LEGEND SEE DRAWING T-2.

REGISTERED PROFESSIONAL ENGINEER JOSHUA F. BERKOWITZ NO. 60229 EXP. 6/30/12 CIVIL STATE OF CALIFORNIA

JBY #0622-15

JB YOUNG & ASSOCIATES
CONSULTANT ENGINEERS
11440 RIVERSIDE DRIVE, SUITE M
LAKESIDE, CA 92040
619-448-9424
619-448-4690 (FAX)

DATE	SUB	DESCRIPTION	BY	A'PD
07/22/11	C	100% FINAL DESIGN		
06/30/11	B	95% NEAR-FINAL DESIGN		
01/31/11	A	30% PRELIMINARY DESIGN		

NATIONAL AERONAUTICS AND SPACE ADMINISTRATION
DRYDEN FLIGHT RESEARCH CENTER
EDWARDS, CA

DRAWING TITLE
UTILITY PLAN #4

PROJECT TITLE
REPAIR CENTER-WIDE FIRE MAINS
DESIGN SUBMITTAL "C"

APPROVALS	DATE
Chief, Facilities Engineering & Asset Mgmt. Office	2-1-12
Project Requestor/Customer	2-1-12
Facilities Project Manager	1-31-12
Chief, Office of Protective Services	02/01/12
Chief - Safety, Health and Environmental Office	2-1-12
DFRC Chief Information Officer	1 Feb 12

DATE STRTD	7/23/10	DATE PRNTD	7/22/11
DRAWN BY	JFB		EDM-1697
SCALE	AS NOTED	TRADE SH. No.	C-4
FILE NAME		SHEET No.	9 of 37

(XX) NOTES:

SEE DRAWING C-5.1.

GENERAL NOTE: FOR UTILITY WORK LEGEND SEE DRAWING T-2.

GRAPHIC SCALE: 1" = 40'

40' 0 40' 80' 120'

TRUE NORTH

REGISTERED PROFESSIONAL ENGINEER JONATHAN E. BERLUCCHI NO. 60229 EXP. 6/30/12 CIVIL STATE OF CALIFORNIA

JBY #0622-15

JB YOUNG & ASSOCIATES
CONSULTANT ENGINEERS
11440 RIVERSIDE DRIVE, SUITE M
LAKESIDE, CA 92040
619-448-9424
619-448-4690 (FAX)

DATE	SUB	DESCRIPTION	BY	A'PD
07/22/11	C	100% FINAL DESIGN		
06/30/11	B	95% NEAR-FINAL DESIGN		
01/31/11	A	30% PRELIMINARY DESIGN		

NATIONAL AERONAUTICS AND SPACE ADMINISTRATION
DRYDEN FLIGHT RESEARCH CENTER
EDWARDS, CA

DRAWING TITLE

UTILITY PLAN #5

PROJECT TITLE

REPAIR CENTER-WIDE FIRE MAINS
DESIGN SUBMITTAL "C"

APPROVALS	DATE
Chief, Facilities Engineering & Asset Mgmt. Office	2-1-12
Project Requestor/Customer	2-1-12
Facilities Project Manager	1-31-12
Chief, Office of Protective Services	02/01/12
Chief – Safety, Health and Environmental Office	2-1-12
DFRC Chief Information Officer	1 Feb 12

DATE STRTD	7/23/10	DATE PRNTD	7/22/11
DRAWN BY	JFB		EDM-1697
SCALE	AS NOTED	TRADE SH. No.	
FILE NAME		C-5	SHEET No. 10 of 37

XX NOTES (FOR UTILITY PLAN #5):

1) INSTALL NEW DI PIPE TEE & TB (SIZE PER PLAN), SEE DETAIL 3 C-5.1 | C-13

9) INSTALL NEW 20" PVC FIRE WATER PIPE, SEE DETAIL 1 C-5.1 | C-13

10) INSTALL NEW 20" 45° DI BEND AND THRUST BLOCK, SEE DETAIL 3 C-5.1 | C-13

12) ABANDON EXISTING FIRE WATER PIPE IN PLACE.

13) CLOSE VALVE. REMOVE AND DISPOSE OF VALVE WELL AND CONC COLLAR IN DIRT AND ASPH PVMT AREAS. GRADE TO MATCH EXST IN DIRT AREAS. INSTALL ASPHALT PATCH IN ASPH PVMT AREAS. REMOVE VALVE COVER AND FILL WITH CONC IN CONC PVMT AREAS.

14) INSTALL NEW 20" 22.5° DI BEND AND THRUST BLOCK. DEFLECT PIPE AS REQUIRED. SEE DETAIL 3 C-5.1 | C-13

16) INSTALL NEW 8" GATE VALVE, SEE DETAIL 2 C-5.1 | C-13

17) INSTALL NEW DI PIPE REDUCER (SIZE PER PLAN).

18) REMOVE SECTION OF 8" PIPE. INSTALL (2) NEW 8" 45° BENDS WITH THRUST BLOCKS. INSTALL NEW 8" PVC PIPE. CONNECT TO EXISTING PIPE 3' CLEAR OF BUILDING WITH NEW ADAPTER COUPLING. SEE DETAIL 3 C-5.1 | C-13

21) INSTALL 6" GATE VALVE, 6" PVC PIPE, AND FIRE HYDRANT, SEE DETAIL 4 C-5.1 | C-13

22) CUT & CAP OR PLUG EXISTING PIPE, SEE DETAIL 1 C-5.1 | C-14 REMOVE AND DISPOSE OF UNUSED PIPE SECTION.

23) INSTALL NEW 8" PVC PIPE, SEE DETAIL 1 C-5.1 | C-13

24) INSTALL NEW 6" PVC PIPE, SEE DETAIL 1 C-5.1 | C-13

25) INSTALL NEW 6" 45° BEND WITH TB, SEE DETAIL 3 C-5.1 | C-13 DEFLECT PIPE AS REQUIRED.

27) INSTALL NEW 6" 90° BEND WITH TB, SEE DETAIL 3 C-5.1 | C-13

28) REMOVE SECTION OF 6" PIPE. INSTALL (2) NEW 6" 45° BENDS WITH THRUST BLOCKS. INSTALL NEW 6" PVC PIPE. CONNECT TO EXISTING PIPE 3' CLEAR OF BUILDING WITH NEW ADAPTER COUPLING. SEE DETAIL 3 C-5.1 | C-13

29) REMOVE AND DISPOSE OF EXISTING FIRE HYDRANT AND RISER PIPE. CAP OR PLUG PIPE A MINIMUM OF 24" BELOW FINISHED GRADE. GRADE SITE TO MATCH EXST. IN PAVED AREAS, REPAIR ASPHALT OR CONC PVMT TO MATCH EXISTING.

30) REMOVE AND DISPOSE OF POST INDICTOR ASSEMBLY. CLOSE EXISTING VALVE. GRADE SITE TO MATCH EXST. IN PAVED AREAS, REPAIR ASPHALT OR CONC PVMT TO MATCH EXISTING.

31) REMOVE AND DISPOSE OF GUARD POST. GRADE SITE TO MATCH EXST. IN PAVED AREAS, REPAIR ASPHALT OR CONC PVMT TO MATCH EXISTING.

32) SAWCUT, REMOVE, DISPOSE AND REPLACE ASPHALT PAVEMENT, SEE DETAIL 1 C-5.1 | C-13

35) SAWCUT, REMOVE, DISPOSE AND REPLACE V-DITCH CHANNEL PAVEMENT, SEE DETAIL 7 C-5.1 | C-14

36) SAWCUT, REMOVE, DISPOSE AND REPLACE 16" THICK CONC PAVEMENT, SEE DETAIL 1 C-5.1 | C-15

39) CONNECT TO EXISTING PIPE WITH ADAPTER COUPLING.

41) INSTALL NEW 10" PVC PIPE, SEE DETAIL 1 C-5.1 | C-13

42) INSTALL NEW 6" GATE VALVE, SEE DETAIL 2 C-5.1 | C-13

45) REMOVE AND DISPOSE OF EXST GV INSIDE VAULT. REMOVE, DISPOSE, AND REPLACE EXST 6" CHECK VALVE INSIDE VAULT. INSTALL NEW 6" PIPE SPOOL AND ADAPTER COUPLINGS. EXST FIRE DEPARTMENT CONNECTION (FDC) & VAULT TO REMAIN.

47) INSTALL NEW POST INDICATOR, SEE DETAIL 5 C-5.1 | C-13

48) INSTALL NEW 20" BUTTERFLY VALVE, SEE DETAIL 2 C-5.1 | C-13

54) INSTALL NEW BLIND FLANGE TO MATCH NEW PIPE SIZE AND TB, SEE DETAIL 3 C-5.1 | C-13

55) SAWCUT, REMOVE, DISPOSE AND REPLACE CONC SIDEWALK, SEE DETAIL 8 C-5.1 | C-14

56) INSTALL NEW 16" BUTTERFLY VALVE, SEE DETAIL 2 C-5.1 | C-13

57) PROTECT EXISTING FENCING IN PLACE.

58) INSTALL NEW 20" 90° DI BEND AND THRUST BLOCK, SEE DETAIL 3 C-5.1 | C-13

63) INSTALL NEW 16" PVC PIPE, SEE DETAIL 1 C-5.1 | C-13

89) SAWCUT, REMOVE, AND DISPOSE OF 12" WIDE STRIP OF ASPHALT PAVEMENT TO PROVIDE A CLEAN EDGE.

90) INSTALL NEW ASPHALT PAVEMENT, SEE DETAIL 5 C-5.1 | C-17

REGISTERED PROFESSIONAL ENGINEER — JOSHUA F. BERKOWITZ — NO. 60229 — EXP. 6/30/12 — CIVIL — STATE OF CALIFORNIA

JBY #0622-15

JB YOUNG & ASSOCIATES
CONSULTANT ENGINEERS
11440 RIVERSIDE DRIVE, SUITE M
LAKESIDE, CA 92040
619-448-9424
619-448-4690 (FAX)

DATE	SUB	DESCRIPTION	BY	A'PD
07/22/11	C	100% FINAL DESIGN		
06/30/11	B	95% NEAR-FINAL DESIGN		
01/31/11	A	30% PRELIMINARY DESIGN		

NATIONAL AERONAUTICS AND SPACE ADMINISTRATION
DRYDEN FLIGHT RESEARCH CENTER
EDWARDS, CA

DRAWING TITLE
NOTES FOR UTILITY PLAN #5

PROJECT TITLE
REPAIR CENTER-WIDE FIRE MAINS
DESIGN SUBMITTAL "C"

APPROVALS	DATE
Chief, Facilities Engineering & Asset Mgmt. Office	2-1-12
Project Requestor/Customer	2-1-12
Facilities Project Manager	1-31-12
Chief, Office of Professional Services	02/01/12
Chief - Safety, Health and Environmental Office	2-1-12
DFRC Chief Information Officer	1 Feb 12

DATE STRTD	7/23/10	DATE PRNTD	7/22/11
DRAWN BY	JFB		EDM-1697
SCALE	AS NOTED	TRADE SH. No.	C-5.1
FILE NAME		SHEET No.	11 of 37

(XX) NOTES:

1) INSTALL NEW DI PIPE TEE & TB (SIZE PER PLAN), SEE DETAIL 3 C-6 | C-13

9) INSTALL NEW 20" PVC FIRE WATER PIPE, SEE DETAIL 1 C-6 | C-13

12) ABANDON EXISTING FIRE WATER PIPE IN PLACE.

13) CLOSE VALVE. REMOVE AND DISPOSE OF VALVE WELL AND CONC COLLAR IN DIRT AND ASPH PVMT AREAS. GRADE TO MATCH EXST IN DIRT AREAS. INSTALL ASPHALT PATCH IN ASPH PVMT AREAS. REMOVE VALVE COVER AND FILL WITH CONC IN CONC PVMT AREAS.

15) INSTALL NEW TAPPING SADDLE AND TB (SIZE PER PLAN), SEE DETAIL 3 C-6 | C-13

17) INSTALL NEW DI PIPE REDUCER (SIZE PER PLAN).

21) INSTALL 6" GATE VALVE, 6" PVC PIPE, AND FIRE HYDRANT, SEE DETAIL 4 C-6 | C-13

22) CUT & CAP OR PLUG EXISTING PIPE, SEE DETAIL 1 C-6 | C-14
REMOVE AND DISPOSE OF UNUSED PIPE SECTION.

24) INSTALL NEW 6" PVC PIPE, SEE DETAIL 1 C-6 | C-13

27) INSTALL NEW 6" 90° BEND WITH TB, SEE DETAIL 3 C-6 | C-13

29) REMOVE AND DISPOSE OF EXISTING FIRE HYDRANT AND RISER PIPE. CAP OR PLUG PIPE A MINIMUM OF 24" BELOW FINISHED GRADE. GRADE SITE TO MATCH EXST. IN PAVED AREAS, REPAIR ASPHALT OR CONC PVMT TO MATCH EXISTING.

30) REMOVE AND DISPOSE OF POST INDICTOR ASSEMBLY. CLOSE EXISTING VALVE. GRADE SITE TO MATCH EXST. IN PAVED AREAS, REPAIR ASPHALT OR CONC PVMT TO MATCH EXISTING.

32) SAWCUT, REMOVE, DISPOSE AND REPLACE ASPHALT PAVEMENT, SEE DETAIL 1 C-6 | C-13

38) EXST FIRE HYDRANT TO REMAIN.

39) CONNECT TO EXISTING PIPE WITH ADAPTER COUPLING.

42) INSTALL NEW 6" GATE VALVE, SEE DETAIL 2 C-6 | C-13

47) INSTALL NEW POST INDICATOR, SEE DETAIL 5 C-6 | C-13

48) INSTALL NEW 20" BUTTERFLY VALVE, SEE DETAIL 2 C-6 | C-13

53) SAWCUT, REMOVE, DISPOSE AND REPLACE CONC SWALE, SEE DETAIL 6 C-6 | C-14

55) SAWCUT, REMOVE, DISPOSE AND REPLACE CONC SIDEWALK, SEE DETAIL 8 C-6 | C-14

56) INSTALL NEW 16" BUTTERFLY VALVE, SEE DETAIL 2 C-6 | C-13

57) PROTECT EXISTING FENCING IN PLACE.

58) INSTALL NEW 20" 90° DI BEND AND THRUST BLOCK, SEE DETAIL 3 C-6 | C-13

59) SAWCUT, REMOVE, DISPOSE AND REPLACE CONC CURB & GUTTER TO MATCH EXISTING, SEE DETAIL 4 C-6 | C-14

60) INSTALL NEW 12" PVC PIPE, SEE DETAIL 1 C-6 | C-13

61) INSTALL NEW 12" GATE VALVE, SEE DETAIL 2 C-6 | C-13

63) INSTALL NEW 16" PVC PIPE, SEE DETAIL 1 C-6 | C-13

64) CUT, REMOVE, AND DISPOSE OF SECTION OF PIPE.

86) INSTALL NEW 16" 90° BEND WITH TB, SEE DETAIL 3 C-6 | C-13

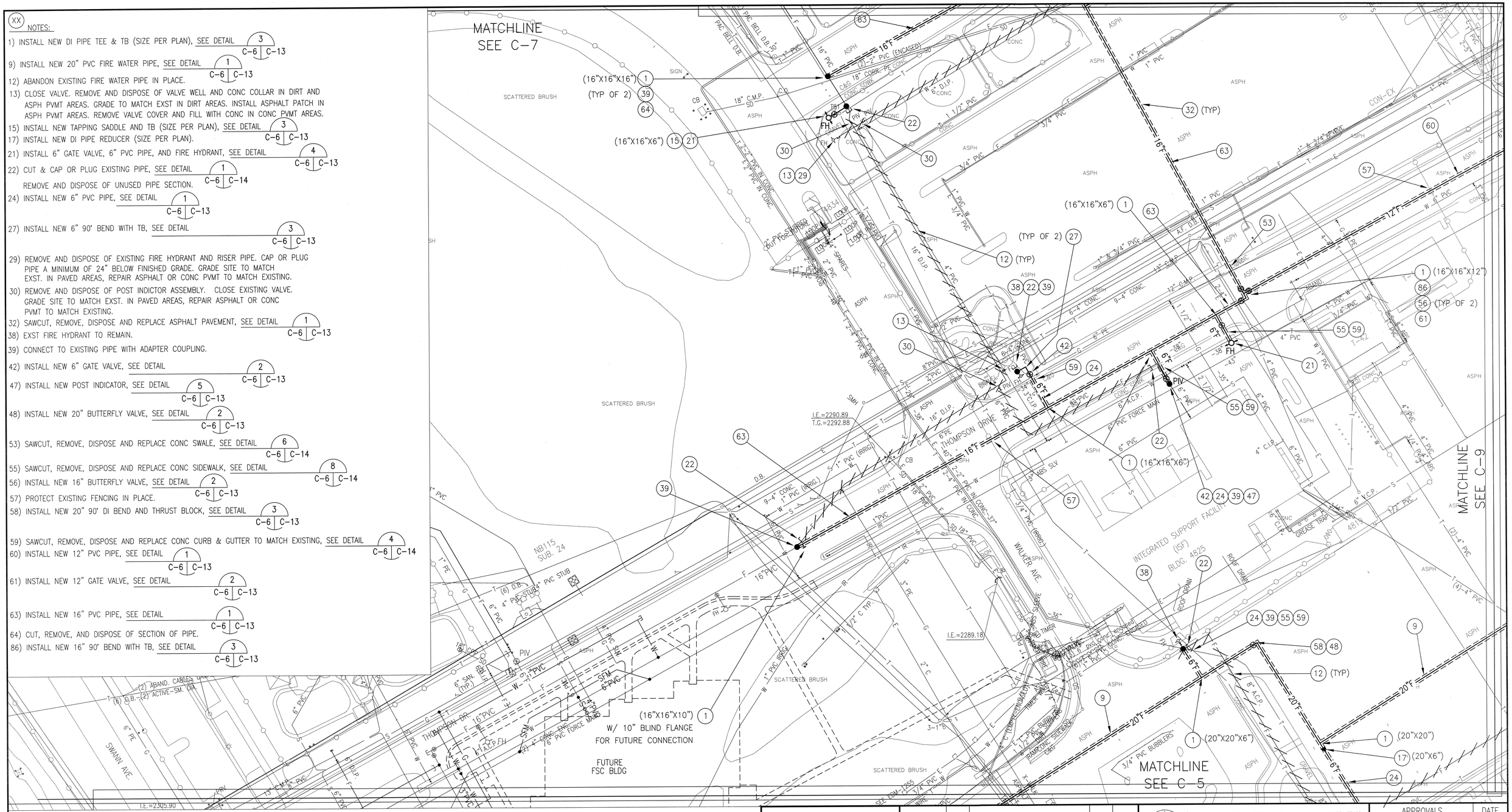

GENERAL NOTE: FOR UTILITY WORK LEGEND SEE DRAWING T-2.

GRAPHIC SCALE: 1" = 40'
40' 0 40' 80' 120'

TRUE NORTH

REGISTERED PROFESSIONAL ENGINEER JOSHUA F. BERTRAM NO. 60229 EXP. 6/30/12 CIVIL STATE OF CALIFORNIA

JBY #0622-15

JB YOUNG & ASSOCIATES
CONSULTANT ENGINEERS
11440 RIVERSIDE DRIVE, SUITE M
LAKESIDE, CA 92040
619-448-9424
619-448-4690 (FAX)

DATE	SUB	DESCRIPTION	BY	A'PD
07/22/11	C	100% FINAL DESIGN		
06/30/11	B	95% NEAR-FINAL DESIGN		
01/31/11	A	30% PRELIMINARY DESIGN		

NATIONAL AERONAUTICS AND SPACE ADMINISTRATION
DRYDEN FLIGHT RESEARCH CENTER
EDWARDS, CA

DRAWING TITLE
UTILITY PLAN #6

PROJECT TITLE
REPAIR CENTER-WIDE FIRE MAINS
DESIGN SUBMITTAL "C"

APPROVALS	DATE
Chief, Facilities Engineering & Asset Mgmt. Office	2-1-12
Project Requestor/Customer	2-1-12
Facilities Project Manager	1-31-12
Chief, Office of Protective Services	02/01/12
Chief, Safety, Health and Environmental Office	2-1-12
DFRC Chief Information Officer	1 Feb 12

DATE STRTD	7/23/10	DATE PRNTD	7/22/11
DRAWN BY	JFB	EDM-1697	
SCALE	AS NOTED	TRADE STR. No. C-6	
FILE NAME		SHEET No. 12 of 37	

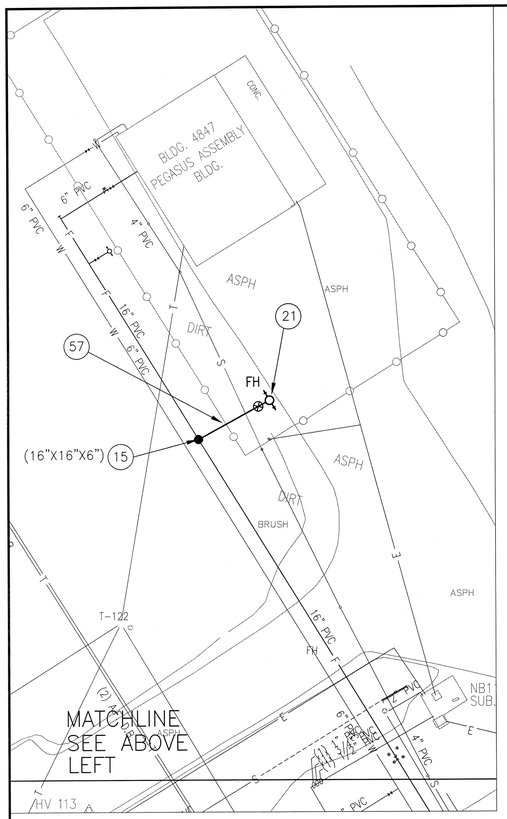

(XX) NOTES:

1) INSTALL NEW DI PIPE TEE & TB (SIZE PER PLAN), SEE DETAIL 3 C-7 | C-13
9) INSTALL NEW 20" PVC FIRE WATER PIPE, SEE DETAIL 1 C-7 | C-13
11) DEFLECT PIPE AS REQUIRED.
12) ABANDON EXISTING FIRE WATER PIPE IN PLACE.
13) CLOSE VALVE. REMOVE AND DISPOSE OF VALVE WELL AND CONC COLLAR IN DIRT AND ASPH PVMT AREAS. GRADE TO MATCH EXST IN DIRT AREAS. INSTALL ASPHALT PATCH IN ASPH PVMT AREAS. REMOVE VALVE COVER AND FILL WITH CONC IN CONC PVMT AREAS.
15) INSTALL NEW TAPPING SADDLE AND TB (SIZE PER PLAN), SEE DETAIL 3 C-7 | C-13
17) INSTALL NEW DI PIPE REDUCER (SIZE PER PLAN).
21) INSTALL 6" GATE VALVE, 6" PVC PIPE, AND FIRE HYDRANT, SEE DETAIL 4 C-7 | C-13
22) CUT & CAP OR PLUG EXISTING PIPE, SEE DETAIL 1 C-7 | C-14
REMOVE AND DISPOSE OF UNUSED PIPE SECTION.
24) INSTALL NEW 6" PVC PIPE, SEE DETAIL 1 C-7 | C-13
25) INSTALL NEW 6" 45° BEND WITH TB, SEE DETAIL 3 C-7 | C-13
DEFLECT PIPE AS REQUIRED.
29) REMOVE AND DISPOSE OF EXISTING FIRE HYDRANT AND RISER PIPE. CAP OR PLUG PIPE A MINIMUM OF 24" BELOW FINISHED GRADE. GRADE SITE TO MATCH EXST. IN PAVED AREAS, REPAIR ASPHALT OR CONC PVMT TO MATCH EXISTING.
30) REMOVE AND DISPOSE OF POST INDICTOR ASSEMBLY. CLOSE EXISTING VALVE. GRADE SITE TO MATCH EXST. IN PAVED AREAS, REPAIR ASPHALT OR CONC PVMT TO MATCH EXISTING.
31) REMOVE AND DISPOSE OF GUARD POST. GRADE SITE TO MATCH EXST. IN PAVED AREAS, REPAIR ASPHALT OR CONC PVMT TO MATCH EXISTING.
32) SAWCUT, REMOVE, DISPOSE AND REPLACE ASPHALT PAVEMENT, SEE DETAIL 1 C-7 | C-13
34) INSTALL NEW 20" 11.25° DI BEND AND THRUST BLOCK.
DEFLECT PIPE AS REQUIRED, SEE DETAIL 3 C-7 | C-13
39) CONNECT TO EXISTING PIPE WITH ADAPTER COUPLING.
42) INSTALL NEW 6" GATE VALVE, SEE DETAIL 2 C-7 | C-13
47) INSTALL NEW POST INDICATOR, SEE DETAIL 5 C-7 | C-13
48) INSTALL NEW 20" BUTTERFLY VALVE, SEE DETAIL 2 C-7 | C-13
53) SAWCUT, REMOVE, DISPOSE AND REPLACE CONC SWALE, SEE DETAIL 6 C-7 | C-14
55) SAWCUT, REMOVE, DISPOSE AND REPLACE CONC SIDEWALK, SEE DETAIL 8 C-7 | C-14
57) PROTECT EXISTING FENCING IN PLACE.
59) SAWCUT, REMOVE, DISPOSE AND REPLACE CONC CURB & GUTTER TO MATCH EXISTING, SEE DETAIL 4 C-7 | C-14
60) INSTALL NEW 12" PVC PIPE, SEE DETAIL 1 C-7 | C-13

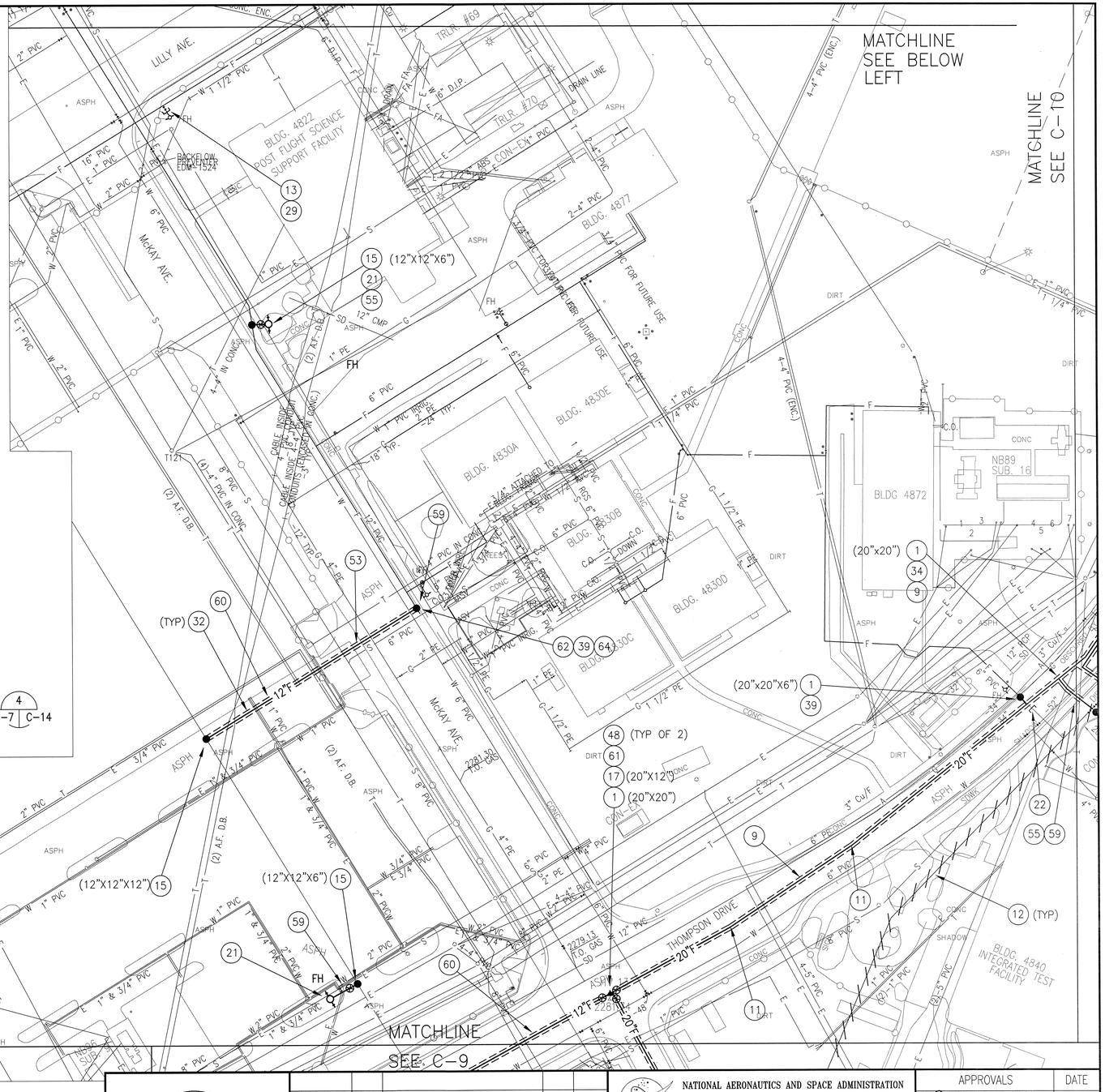

(XX) NOTES (CONTINUED):

61) INSTALL NEW 12" GATE VALVE, SEE DETAIL 2 C-7 | C-13
62) INSTALL NEW 12" 90° BEND WITH TB, SEE DETAIL 3 C-7 | C-13
63) INSTALL NEW 16" PVC PIPE, SEE DETAIL 1 C-7 | C-13
64) CUT, REMOVE, AND DISPOSE OF SECTION OF PIPE.
92) CUT, REMOVE & DISPOSE OF PORTION OF EXST 5' TALL WROUGHT IRON FENCE. INSTALL NEW LOCKABLE 3' WIDE X 5' TALL WROUGHT IRON SWING GATE TO MATCH EXST.

GENERAL NOTE: FOR UTILITY WORK LEGEND SEE DRAWING T-2.

GRAPHIC SCALE: 1" = 40'
40' 0 40' 80' 120'

TRUE NORTH

REGISTERED PROFESSIONAL ENGINEER JONATHAN E. BERGSCHNEIDER NO. 60229 EXP. 6/30/12 CIVIL STATE OF CALIFORNIA

JBY #0622-15

JB YOUNG & ASSOCIATES
CONSULTANT ENGINEERS
11440 RIVERSIDE DRIVE, SUITE M
LAKESIDE, CA 92040
619-448-9424
619-448-4690 (FAX)

DATE	SUB	DESCRIPTION	BY	A'PD
07/22/11	C	100% FINAL DESIGN		
06/30/11	B	95% NEAR-FINAL DESIGN		
01/31/11	A	30% PRELIMINARY DESIGN		

NATIONAL AERONAUTICS AND SPACE ADMINISTRATION
DRYDEN FLIGHT RESEARCH CENTER
EDWARDS, CA

DRAWING TITLE
UTILITY PLAN #7

PROJECT TITLE
REPAIR CENTER-WIDE FIRE MAINS
DESIGN SUBMITTAL "C"

APPROVALS	DATE
Chief, Facilities Engineering & Asset Mgmt. Office	2-1-12
Project Requestor/Customer	2-1-12
Facilities Project Manager	1-31-12
Chief, Office of Protective Services	02/01/12
Chief – Safety, Health and Environmental Office	2-1-12
DFRC Chief Information Officer	1 Feb 12

DATE STRTD	7/23/10	DATE PRNTD	7/22/11
DRAWN BY	JFB	EDM-1697	
SCALE	AS NOTED	TRADE SH. No. C-7	
FILE NAME		SHEET No. 13 of 37	

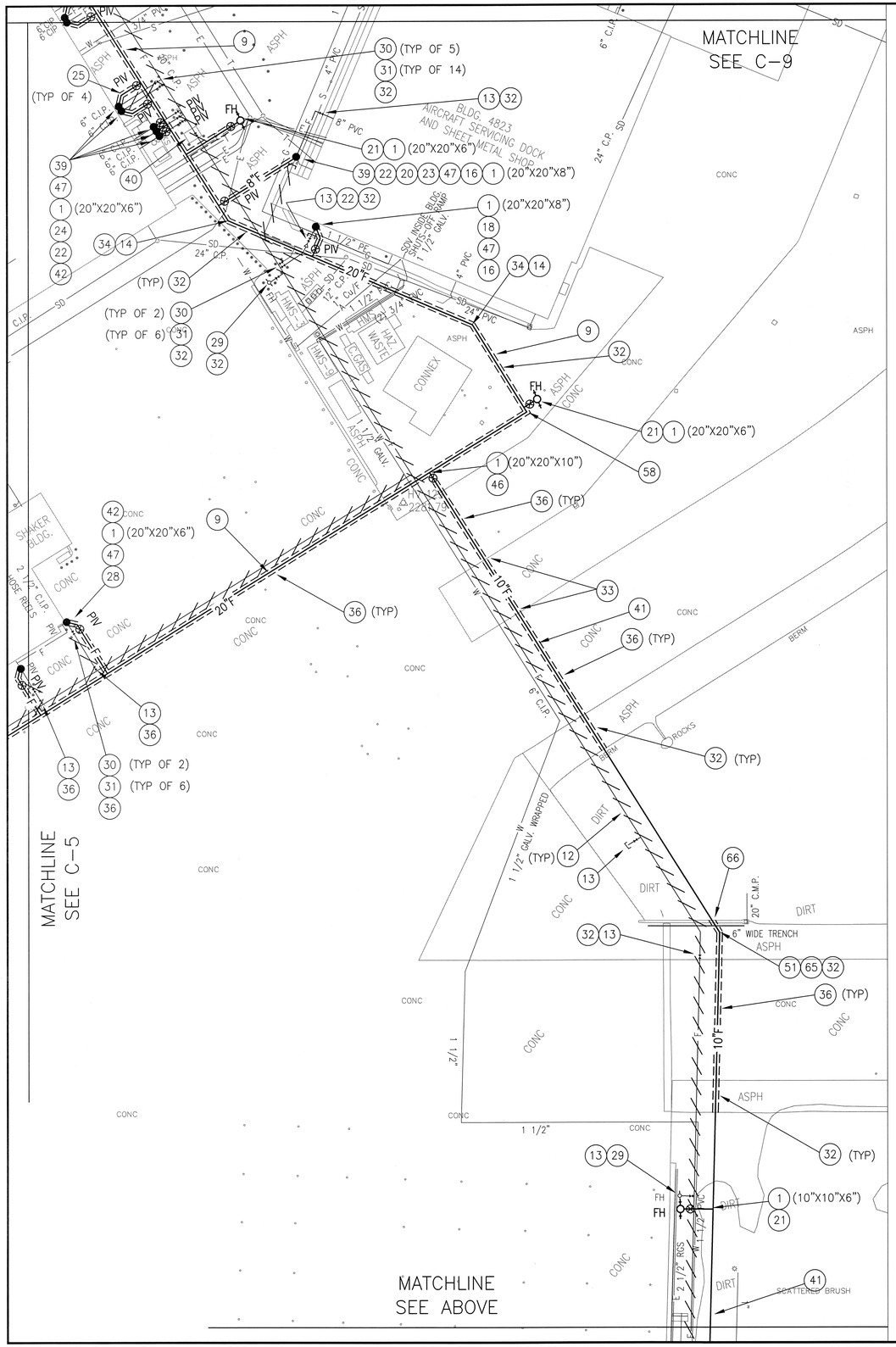

(XX) NOTES:

1) INSTALL NEW DI PIPE TEE & TB (SIZE PER PLAN), SEE DETAIL 3 C-8 | C-13

9) INSTALL NEW 20" PVC FIRE WATER PIPE, SEE DETAIL 1 C-8 | C-13

13) CLOSE VALVE. REMOVE AND DISPOSE OF VALVE WELL AND CONC COLLAR IN DIRT AND ASPH PVMT AREAS. GRADE TO MATCH EXST IN DIRT AREAS. INSTALL ASPHALT PATCH IN ASPH PVMT AREAS. REMOVE VALVE COVER AND FILL WITH CONC IN CONC PVMT AREAS.

14) INSTALL NEW 20" 22.5° DI BEND AND THRUST BLOCK. DEFLECT PIPE AS REQUIRED, SEE DETAIL 3 C-8 | C-13

16) INSTALL NEW 8" GATE VALVE, SEE DETAIL 2 C-8 | C-13

18) REMOVE SECTION OF 8" PIPE. INSTALL (2) NEW 8" 45° BENDS WITH THRUST BLOCKS. INSTALL NEW 8" PVC PIPE. CONNECT TO EXISTING PIPE 3' CLEAR OF BUILDING WITH NEW ADAPTER COUPLING. SEE DETAIL 3 C-8 | C-13

20) INSTALL NEW 8" 45° BEND WITH TB, SEE DETAIL 3 C-8 | C-13

21) INSTALL NEW 6" GATE VALVE, 6" PVC PIPE, AND FIRE HYDRANT, SEE DETAIL 4 C-8 | C-13

22) CUT & CAP OR PLUG EXISTING PIPE, SEE DETAIL 1 C-8 | C-14 REMOVE AND DISPOSE OF UNUSED PIPE SECTION.

23) INSTALL NEW 8" PVC PIPE, SEE DETAIL 1 C-8 | C-13

24) INSTALL NEW 6" PVC PIPE, SEE DETAIL 1 C-8 | C-13

25) INSTALL NEW 6" 45° BEND WITH TB, SEE DETAIL 3 C-8 | C-13 DEFLECT PIPE AS REQUIRED.

28) REMOVE SECTION OF 6" PIPE. INSTALL (2) NEW 6" 45° BENDS WITH THRUST BLOCKS. INSTALL NEW 6" PVC PIPE. CONNECT TO EXISTING PIPE 3' CLEAR OF BUILDING WITH NEW ADAPTER COUPLING. SEE DETAIL 3 C-8 | C-13

29) REMOVE AND DISPOSE OF EXISTING FIRE HYDRANT AND RISER PIPE. CAP OR PLUG PIPE A MINIMUM OF 24" BELOW FINISHED GRADE. GRADE SITE TO MATCH EXST. IN PAVED AREAS, REPAIR ASPHALT OR CONC PVMT TO MATCH EXISTING.

30) REMOVE AND DISPOSE OF POST INDICTOR ASSEMBLY. CLOSE EXISTING VALVE. GRADE SITE TO MATCH EXST. IN PAVED AREAS, REPAIR ASPHALT OR CONC PVMT TO MATCH EXISTING.

31) REMOVE AND DISPOSE OF GUARD POST. GRADE SITE TO MATCH EXST. IN PAVED AREAS, REPAIR ASPHALT OR CONC PVMT TO MATCH EXISTING.

32) SAWCUT, REMOVE, DISPOSE AND REPLACE ASPHALT PAVEMENT, SEE DETAIL 1 C-8 | C-13

33) SAWCUT, REMOVE, DISPOSE AND REPLACE 8" THICK CONC PAVEMENT, SEE DETAIL 2 C-8 | C-14

34) INSTALL NEW 20" 11.25° DI BEND AND THRUST BLOCK. DEFLECT PIPE AS REQUIRED, SEE DETAIL 3 C-8 | C-13

36) SAWCUT, REMOVE, DISPOSE AND REPLACE 16" THICK CONC PAVEMENT, SEE DETAIL 1 C-8 | C-15

39) CONNECT TO EXISTING PIPE WITH ADAPTER COUPLING.

40) REMOVE AND DISPOSE OF CONCRETE VAULT, SEE DETAIL 4 C-8 | C-15

41) INSTALL NEW 10" PVC PIPE, SEE DETAIL 1 C-8 | C-13

42) INSTALL NEW 6" GATE VALVE, SEE DETAIL 2 C-8 | C-13

46) INSTALL NEW 10" GATE VALVE, SEE DETAIL 2 C-8 | C-13

47) INSTALL NEW POST INDICATOR, SEE DETAIL 5 C-8 | C-13

51) INSTALL NEW 10" 22.5° BEND WITH TB, SEE DETAIL 3 C-8 | C-13

58) INSTALL NEW 20" 90° DI BEND AND THRUST BLOCK, SEE DETAIL 3 C-8 | C-13

65) INSTALL NEW 10" 11.25° BEND WITH TB, SEE DETAIL 3 C-8 | C-13

66) INSTALL NEW PIPING UNDER EXISITNG CONCRETE UTILITY TRENCH OR GRATED CONC CHANNEL, TO REMAIN. PROTECT AS REQUIRED.

67) INSTALL NEW BLIND FLANGE AND THRUST BLOCK FOR FUTURE EXTENSION, SEE DETAIL 3 C-8 | C-13

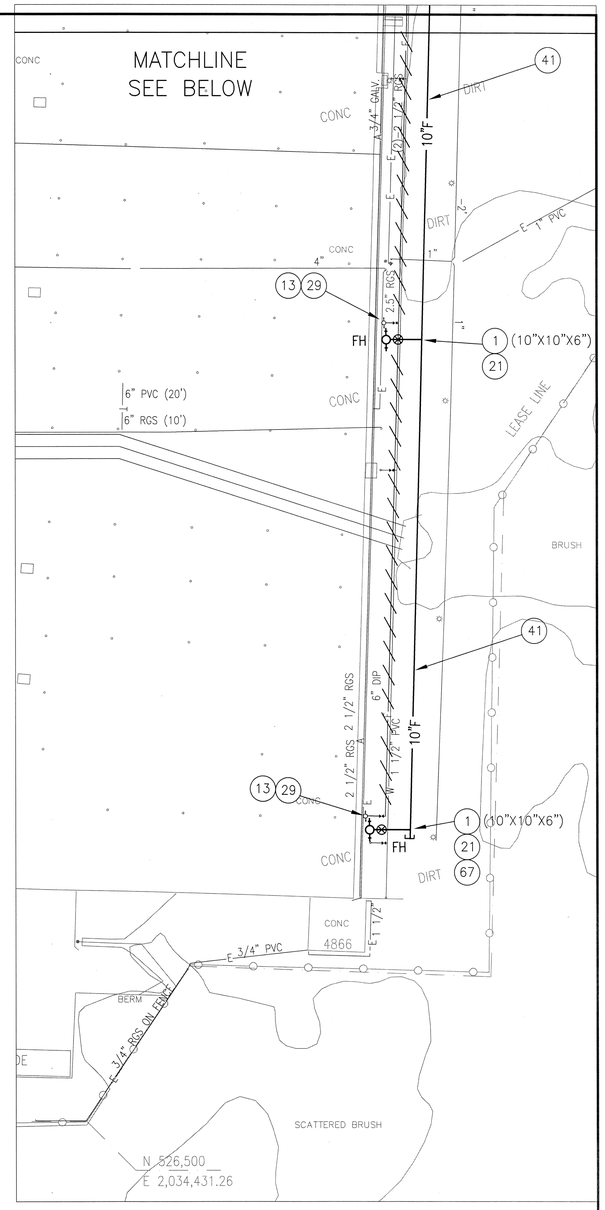

GENERAL NOTE: FOR UTILITY WORK LEGEND SEE DRAWING T-2.

GRAPHIC SCALE: 1" = 40'

40' 0 40' 80' 120'

TRUE NORTH

REGISTERED PROFESSIONAL ENGINEER JONATHAN F. BERKSHIRE NO. 60229 EXP. 6/30/12 CIVIL STATE OF CALIFORNIA

JBY #0622-15

JB YOUNG & ASSOCIATES
CONSULTANT ENGINEERS
11440 RIVERSIDE DRIVE, SUITE M
LAKESIDE, CA 92040
619-448-9424
619-448-4690 (FAX)

DATE	SUB	DESCRIPTION	BY	A'PD
07/22/11	C	100% FINAL DESIGN		
06/30/11	B	95% NEAR-FINAL DESIGN		
01/31/11	A	30% PRELIMINARY DESIGN		

NATIONAL AERONAUTICS AND SPACE ADMINISTRATION
DRYDEN FLIGHT RESEARCH CENTER
EDWARDS, CA

DRAWING TITLE

UTILITY PLAN #8

PROJECT TITLE

REPAIR CENTER-WIDE FIRE MAINS
DESIGN SUBMITTAL "C"

APPROVALS	DATE
Chief, Facilities Engineering & Asset Mgmt. Office	2-1-12
Project Requestor/Customer	2-1-12
Facilities Project Manager	1-31-12
Chief, Office of Protective Services	02/01/12
Chief - Safety, Health and Environmental Office	2-1-12
Office Chief Information Officer	1 Feb 12

DATE STRTD	7/23/10	DATE PRNTD	7/22/11
DRAWN BY	JFB	EDM-1697	
SCALE	AS NOTED	TRADE SH. No.	C-8
FILE NAME		SHEET No.	14 of 37

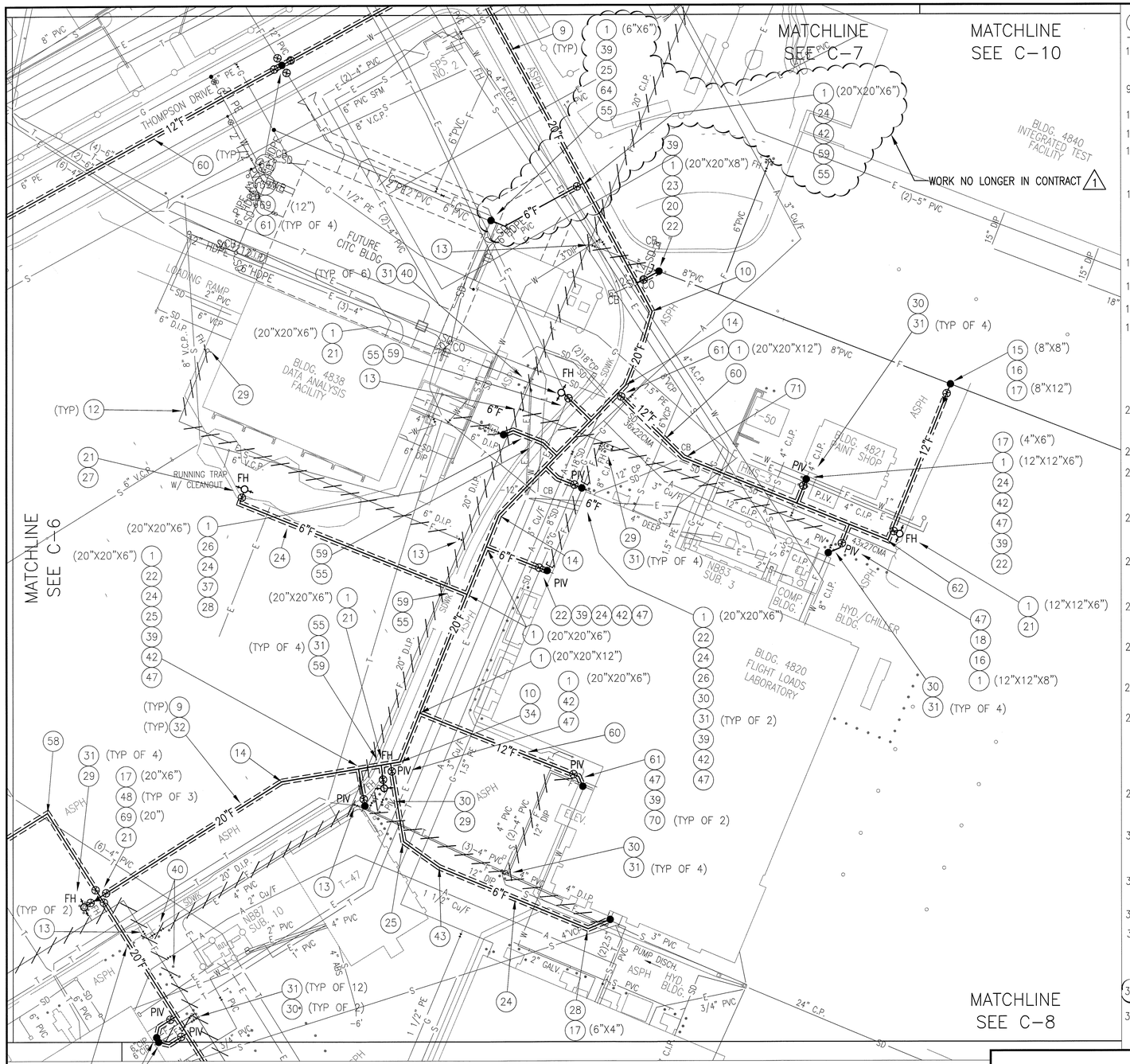

GENERAL NOTE: FOR UTILITY WORK LEGEND SEE DRAWING T-2.

GRAPHIC SCALE: 1" = 40'

40' 0 40' 80' 120'

TRUE NORTH

(XX) NOTES:

1) INSTALL NEW DI PIPE TEE & TB (SIZE PER PLAN), SEE DETAIL 3 C-9 | C-13
9) INSTALL NEW 20" PVC FIRE WATER PIPE, SEE DETAIL 1 C-9 | C-13
10) INSTALL NEW 20" 45° DI BEND AND THRUST BLOCK, SEE DETAIL 3 C-9 | C-13
12) ABANDON EXISTING FIRE WATER PIPE IN PLACE.
13) CLOSE VALVE. REMOVE AND DISPOSE OF VALVE WELL AND CONC COLLAR IN DIRT AND ASPH PVMT AREAS. GRADE TO MATCH EXST IN DIRT AREAS. INSTALL ASPHALT PATCH IN ASPH PVMT AREAS. REMOVE VALVE COVER AND FILL WITH CONC IN CONC PVMT AREAS.
14) INSTALL NEW 20" 22.5° DI BEND AND THRUST BLOCK. DEFLECT PIPE AS REQUIRED. SEE DETAIL 3 C-9 | C-13
15) INSTALL NEW TAPPING SADDLE AND TB (SIZE PER PLAN), SEE DETAIL 3 C-9 | C-13
16) INSTALL NEW 8" GATE VALVE, SEE DETAIL 2 C-9 | C-13
17) INSTALL NEW DI PIPE REDUCER (SIZE PER PLAN).
18) REMOVE SECTION OF 8" PIPE. INSTALL (2) NEW 8" 45° BENDS WITH THRUST BLOCKS. INSTALL NEW 8" PVC PIPE. CONNECT TO EXISTING PIPE 3' CLEAR OF BUILDING WITH NEW ADAPTER COUPLING. SEE DETAIL 3 C-9 | C-13
20) INSTALL NEW 8" 45° BEND WITH TB, SEE DETAIL 3 C-9 | C-13
21) INSTALL 6" GATE VALVE, 6" PVC PIPE, AND FIRE HYDRANT, SEE DETAIL 4 C-9 | C-13
22) CUT & CAP OR PLUG EXISTING PIPE, SEE DETAIL 1 C-9 | C-14 REMOVE AND DISPOSE OF UNUSED PIPE SECTION.
23) INSTALL NEW 8" PVC PIPE, SEE DETAIL 1 C-9 | C-13
24) INSTALL NEW 6" PVC PIPE, SEE DETAIL 1 C-9 | C-13
25) INSTALL NEW 6" 45° BEND WITH TB, SEE DETAIL 3 C-9 | C-13 DEFLECT PIPE AS REQUIRED.
26) INSTALL NEW 6" 22.5° BEND WITH TB, SEE DETAIL 3 C-9 | C-13 DEFLECT PIPE AS REQUIRED.
27) INSTALL NEW 6" 90° BEND WITH TB, SEE DETAIL 3 C-9 | C-13
28) REMOVE SECTION OF 6" PIPE. INSTALL (2) NEW 6" 45° BENDS WITH THRUST BLOCKS. INSTALL NEW 6" PVC PIPE. CONNECT TO EXISTING PIPE 3' CLEAR OF BUILDING WITH NEW ADAPTER COUPLING. SEE DETAIL 3 C-9 | C-13
29) REMOVE AND DISPOSE OF EXISTING FIRE HYDRANT AND RISER PIPE. CAP OR PLUG PIPE A MINIMUM OF 24" BELOW FINISHED GRADE. GRADE SITE TO MATCH EXST. IN PAVED AREAS, REPAIR ASPHALT OR CONC PVMT TO MATCH EXISTING.
30) REMOVE AND DISPOSE OF POST INDICTOR ASSEMBLY. CLOSE EXISTING VALVE. GRADE SITE TO MATCH EXST. IN PAVED AREAS, REPAIR ASPHALT OR CONC PVMT TO MATCH EXISTING.
31) REMOVE AND DISPOSE OF GUARD POST. GRADE SITE TO MATCH EXST. IN PAVED AREAS, REPAIR ASPHALT OR CONC PVMT TO MATCH EXISTING.
32) SAWCUT, REMOVE, DISPOSE AND REPLACE ASPHALT PAVEMENT, SEE DETAIL 1 C-9 | C-13
34) INSTALL NEW 20" 11.25° DI BEND AND THRUST BLOCK. DEFLECT PIPE AS REQUIRED, SEE DETAIL 3 C-9 | C-13
37) INSTALL NEW CHECK VALVE, GATE VALVE, PIV AND FDC, IN EXISTING VAULT 1
39) CONNECT TO EXISTING PIPE WITH ADAPTER COUPLING.
40) REMOVE AND DISPOSE OF CONCRETE VAULT, SEE DETAIL 4 C-9 | C-15
42) INSTALL NEW 6" GATE VALVE, SEE DETAIL 2 C-9 | C-13
43) INSTALL NEW 6" 11.25° BEND WITH TB, SEE DETAIL 3 C-9 | C-13
45) REMOVE AND DISPOSE OF EXST MH OR VAULT, FDC ON PIPE RISER, & VALVING. CAP OR PLUG FCD PIPE RISER A MINIMUM OF 24" BELOW FINISHED GRADE, SEE DETAIL 4 C-9 | C-15
47) INSTALL NEW POST INDICATOR, SEE DETAIL 5 C-9 | C-13
48) INSTALL NEW 20" BUTTERFLY VALVE, SEE DETAIL 2 C-9 | C-13
55) SAWCUT, REMOVE, DISPOSE AND REPLACE CONC SIDEWALK, SEE DETAIL 8 C-9 | C-14
58) INSTALL NEW 20" 90° DI BEND AND THRUST BLOCK, SEE DETAIL 3 C-9 | C-13
59) SAWCUT, REMOVE, DISPOSE AND REPLACE CONC CURB & GUTTER TO MATCH EXISTING, SEE DETAIL 4 C-9 | C-14
60) INSTALL NEW 12" PVC PIPE, SEE DETAIL 1 C-9 | C-13
61) INSTALL NEW 12" GATE VALVE, SEE DETAIL 2 C-9 | C-13
62) INSTALL NEW 12" 90° BEND WITH TB, SEE DETAIL 3 C-9 | C-13
64) CUT, REMOVE, AND DISPOSE OF SECTION OF PIPE.
68) REMOVE, DISPOSE, AND REPLACE GUARD POST, SEE DETAIL 7 C-9 | C-13
69) INSTALL NEW DI CROSS (SIZE PER PLAN).
70) INSTALL NEW 12" 45° BEND WITH TB, SEE DETAIL 3 C-9 | C-13
71) INSTALL NEW 12" 22.5° BEND WITH TB, SEE DETAIL 3 C-9 | C-13

REGISTERED PROFESSIONAL ENGINEER — JONATHAN F. BERTSCH — NO. 60229 EXP. 6/30/12 — CIVIL — STATE OF CALIFORNIA

JBY #0622-15

JB YOUNG & ASSOCIATES
CONSULTANT ENGINEERS
11440 RIVERSIDE DRIVE, SUITE M
LAKESIDE, CA 92040
619-448-9424
619-448-4690 (FAX)

DATE	SUB	DESCRIPTION	BY	A'PD
05/10/12		NASA EDITS – DELTA 1 (1)	TSS	TSS
07/22/11	C	100% FINAL DESIGN		
06/30/11	B	95% NEAR-FINAL DESIGN		
01/31/11	A	30% PRELIMINARY DESIGN		

NATIONAL AERONAUTICS AND SPACE ADMINISTRATION
DRYDEN FLIGHT RESEARCH CENTER
EDWARDS, CA

DRAWING TITLE
UTILITY PLAN #9

PROJECT TITLE
REPAIR CENTER-WIDE FIRE MAINS
DESIGN SUBMITTAL "C"

APPROVALS	DATE
Chief, Facilities Engineering & Asset Mgmt. Office	5-10-12
Project Inspector/Customer	5-10-12
Facilities Project Manager	5-10-12
Chief, Office of Protective Services	5-10-12
Chief, Safety, Health and Environmental Office	5-10-12
DFRC Chief Information Officer	10 May 12

DATE STRTD	7/23/10	DATE PRNTD	7/22/11
DRAWN BY	JFB		EDM-1697
SCALE	AS NOTED	TRADE SH. No. C-9	SHEET No. 15 of 37
FILE NAME			

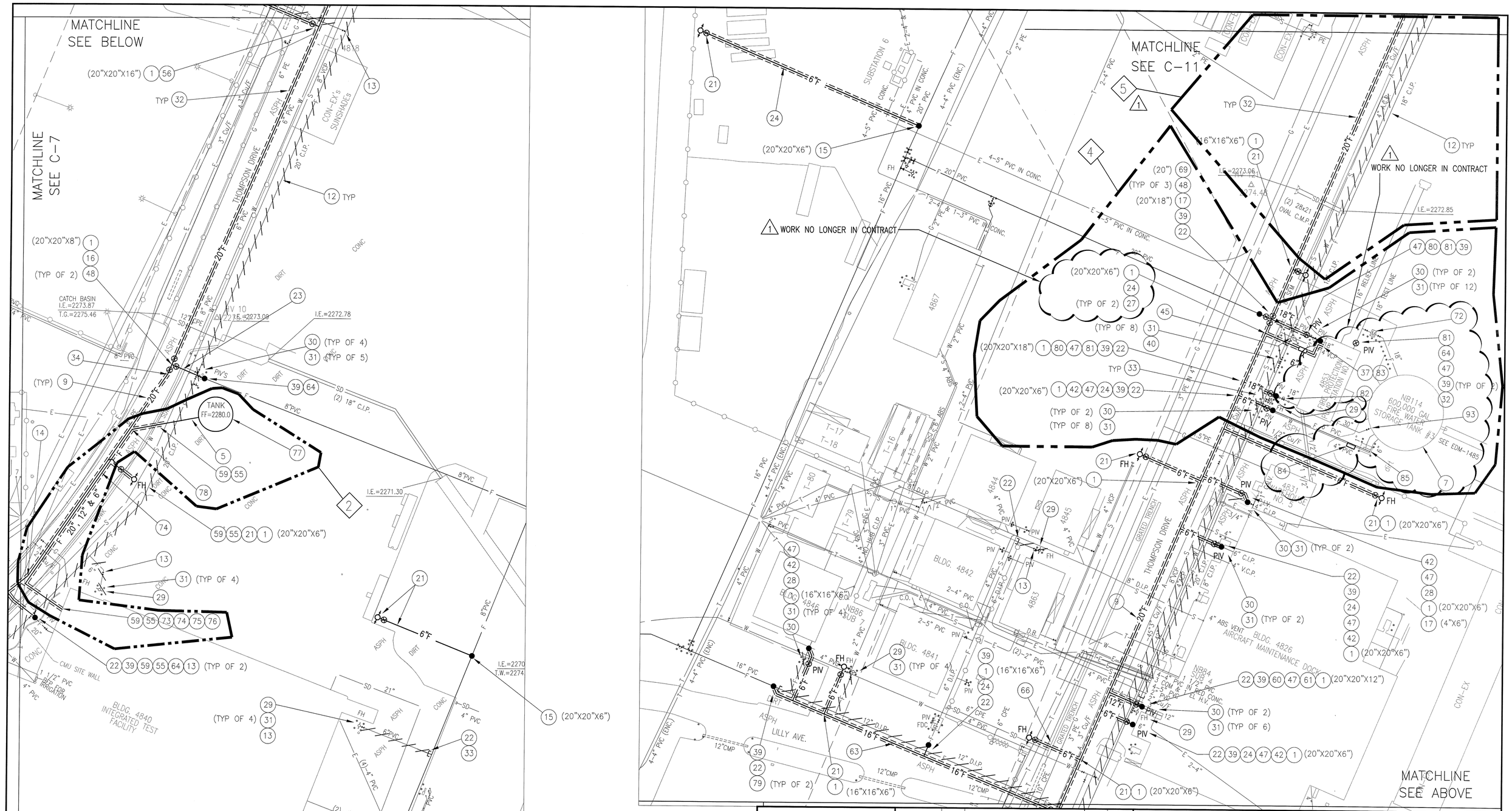

REGISTERED PROFESSIONAL ENGINEER
JONATHAN F. BERGSCHNEIDER
NO. 60229
EXP. 6/30/12
CIVIL
STATE OF CALIFORNIA

JBY #0622-15

JB YOUNG & ASSOCIATES
CONSULTANT ENGINEERS
11440 RIVERSIDE DRIVE, SUITE M
LAKESIDE, CA 92040
619-448-9424
619-448-4690 (FAX)

DATE	SUB	DESCRIPTION	BY	A'PD
05/10/12		NASA EDITS - DELTA 1 (1)	TSS	TSS
07/22/11	C	100% FINAL DESIGN		
06/30/11	B	95% NEAR-FINAL DESIGN		
01/31/11	A	30% PRELIMINARY DESIGN		

NATIONAL AERONAUTICS AND SPACE ADMINISTRATION
DRYDEN FLIGHT RESEARCH CENTER
EDWARDS, CA

DRAWING TITLE
UTILITY PLAN #10

PROJECT TITLE
REPAIR CENTER-WIDE FIRE MAINS
DESIGN SUBMITTAL "C"

APPROVALS	DATE
Chief, Facilities Engineering & Asset Mgmt. Office	5-10-12
Project Requestor/Customer	5-10-12
Facilities Project Manager	5-10-12
Chief, Office of Protective Services	5/10/12
Chief - Safety, Health and Environmental Office	5-10-12
DFRC Chief, Information Officer	10May12

DATE STRTD	7/23/10	DATE PRNTD	7/22/11
DRAWN BY	JFB		
SCALE	AS NOTED	TRADE SH. No.	C-10
FILE NAME			EDM-1697
			SHEET No. 16 of 37

(XX) NOTES:

1) INSTALL NEW DI PIPE TEE & TB (SIZE PER PLAN), SEE DETAIL 3 / C-10.1 | C-13

5) INSTALL NEW WATER METER AND VAULT ON 6" TANK FILL LINE, SEE DETAIL 2 / C-10.1 | C-17

7) REMOVE, DISPOSE, AND REPLACE EXISTING TANK CATHODIC PROTECTION SYSTEM AND PANEL, SEE SPECIFICATIONS.

9) INSTALL NEW 20" PVC FIRE WATER PIPE, SEE DETAIL 1 / C-10.1 | C-13

12) ABANDON EXISTING FIRE WATER PIPE IN PLACE.

13) CLOSE VALVE. REMOVE AND DISPOSE OF VALVE WELL AND CONC COLLAR IN DIRT AND ASPH PVMT AREAS. GRADE TO MATCH EXST IN DIRT AREAS. INSTALL ASPHALT PATCH IN ASPH PVMT AREAS. REMOVE VALVE COVER AND FILL WITH CONC IN CONC PVMT AREAS.

14) INSTALL NEW 20" 22.5° DI BEND AND THRUST BLOCK. DEFLECT PIPE AS REQUIRED. SEE DETAIL 3 / C-10.1 | C-13

15) INSTALL NEW TAPPING SADDLE AND TB (SIZE PER PLAN), SEE DETAIL 3 / C-10.1 | C-13

16) INSTALL NEW 8" GATE VALVE, SEE DETAIL 2 / C-10.1 | C-13

17) INSTALL NEW DI PIPE REDUCER (SIZE PER PLAN).

21) INSTALL 6" GATE VALVE, 6" PVC PIPE, AND FIRE HYDRANT, SEE DETAIL 4 / C-10.1 | C-13

22) CUT & CAP OR PLUG EXISTING PIPE, SEE DETAIL 1 / C-10.1 | C-14
REMOVE AND DISPOSE OF UNUSED PIPE SECTION.

23) INSTALL NEW 8" PVC PIPE, SEE DETAIL 1 / C-10.1 | C-13

24) INSTALL NEW 6" PVC PIPE, SEE DETAIL 1 / C-10.1 | C-13

27) INSTALL NEW 6" 90° BEND WITH TB, SEE DETAIL 3 / C-10.1 | C-13

28) REMOVE SECTION OF 6" PIPE. INSTALL (2) NEW 6" 45° BENDS WITH THRUST BLOCKS. INSTALL NEW 6" PVC PIPE. CONNECT TO EXISTING PIPE 3' CLEAR OF BUILDING WITH NEW ADAPTER COUPLING. SEE DETAIL 3 / C-10.1 | C-13

29) REMOVE AND DISPOSE OF EXISTING FIRE HYDRANT AND RISER PIPE. CAP OR PLUG PIPE A MINIMUM OF 24" BELOW FINISHED GRADE. GRADE SITE TO MATCH EXST. IN PAVED AREAS, REPAIR ASPHALT OR CONC PVMT TO MATCH EXISTING.

30) REMOVE AND DISPOSE OF POST INDICTOR ASSEMBLY. CLOSE EXISTING VALVE. GRADE SITE TO MATCH EXST. IN PAVED AREAS, REPAIR ASPHALT OR CONC PVMT TO MATCH EXISTING.

31) REMOVE AND DISPOSE OF GUARD POST. GRADE SITE TO MATCH EXST. IN PAVED AREAS, REPAIR ASPHALT OR CONC PVMT TO MATCH EXISTING.

32) SAWCUT, REMOVE, DISPOSE AND REPLACE ASPHALT PAVEMENT, SEE DETAIL 1 / C-10.1 | C-13

33) SAWCUT, REMOVE, DISPOSE AND REPLACE 8" THICK CONC PAVEMENT, SEE DETAIL 2 / C-10.1 | C-14

34) INSTALL NEW 20" 11.25° DI BEND AND THRUST BLOCK. DEFLECT PIPE AS REQUIRED. SEE DETAIL 3 / C-10.1 | C-13

37) INSTALL NEW CHECK VALVE, GATE VALVE, PIV AND FDC, IN EXISTING VAULT (1)

39) CONNECT TO EXISTING PIPE WITH ADAPTER COUPLING.

40) REMOVE AND DISPOSE OF CONCRETE VAULT, SEE DETAIL 4 / C-10.1 | C-15

42) INSTALL NEW 6" GATE VALVE, SEE DETAIL 2 / C-10.1 | C-13

45) REMOVE AND DISPOSE OF EXST MH OR VAULT, FDC ON PIPE RISER, & VALVING. CAP OR PLUG FDC PIPE RISER A MINIMUM OF 24" BELOW FINISHED GRADE, SEE DETAIL 4 / C-10.1 | C-15

47) INSTALL NEW POST INDICATOR, SEE DETAIL 5 / C-10.1 | C-13

48) INSTALL NEW 20" BUTTERFLY VALVE, SEE DETAIL 2 / C-10.1 | C-13

55) SAWCUT, REMOVE, DISPOSE AND REPLACE CONC SIDEWALK, SEE DETAIL 8 / C-10.1 | C-14

56) INSTALL NEW 16" BUTTERFLY VALVE, SEE DETAIL 2 / C-10.1 | C-13

59) SAWCUT, REMOVE, DISPOSE AND REPLACE CONC CURB & GUTTER TO MATCH EXISTING, SEE DETAIL 4 / C-10.1 | C-14

60) INSTALL NEW 12" PVC PIPE, SEE DETAIL 1 / C-10.1 | C-13

61) INSTALL NEW 12" GATE VALVE, SEE DETAIL 2 / C-10.1 | C-13

63) INSTALL NEW 16" PVC PIPE, SEE DETAIL 1 / C-10.1 | C-13

64) CUT, REMOVE, AND DISPOSE OF SECTION OF PIPE.

66) INSTALL NEW PIPING UNDER EXISTING CONCRETE UTILITY TRENCH OR GRATED CONC CHANNEL, TO REMAIN. PROTECT AS REQUIRED.

69) INSTALL NEW DI CROSS (SIZE PER PLAN).

72) REMOVE, DISPOSE, AND REPLACE FLOW METER, SEE DETAIL 3 / C-10.1 | C-16

73) JACK PIPING UNDER EXISTING 8' TALL CMU BLOCK SCREEN WALL AND CONC FOOTING

74) INSTALL NEW 20" PVC TANK SUCTION PIPE, 12" PVC RE-CIRCULATION PIPE, AND 6" PVC TANK FILL PIPE, SEE DETAIL 1 / C-10.1 | C-13

75) CONNECT THE (3) NEW PIPES TO NEW BLDG 4840 SPRINKLER ROOM, SEE DETAIL 3 / C-10.1 | C-19

76) INSTALL NEW 20", 12" & 6" 90° RESTRAINED JOINT DI BENDS.

77) NEW 50,000 GALLON BOLTED STEEL TANK, SEE DETAIL 1 / C-10.1 | C-19

78) INSTALL NEW 20", 12" & 6" 45° RESTRAINED JOINT DI BENDS.

79) INSTALL NEW 16" 45° BEND WITH TB, SEE DETAIL 3 / C-10.1 | C-13

80) INSTALL NEW 18" PVC PIPE, SEE DETAIL 1 / C-10.1 | C-13

81) INSTALL NEW 18" BUTTERFLY VALVE, SEE DETAIL 2 / C-10.1 | C-13

82) REMOVE, DISPOSE, AND REPLACE EXISTING 18" PRV, SEE DETAIL 2 / C-10.1 | C-16
MATCH EXISTING PRV SETTINGS.

83) CONNECT TO EXISTING FIRE SERVICE RISER INSIDE BLDG, SEE PLAN 2 / C-10.1 | C-19

84) INSTALL NEW 4" RPBP ON DOMESTIC WATER SERVICE, SEE DETAIL 5 / C-10.1 | C-15

85) REMOVE AND DISPOSE OF DOMESTIC WATER 4" RPBP INSIDE VAULT. REPLACE WITH 4" DI PIPE SPOOL.
REMOVE, DISPOSE, AND REPLACE 6" FIRE WATER FILL ALTITUDE VALVE INSIDE VAULT. NEW ALTITUDE VALVE SHALL BE CONTROLLED BY NEW TANK LEVEL SENSING SYSTEM.

93) REMOVE, DISPOSE, AND REPLACE 30" TANK OUTLET BUTTERFLY VALVE, INSULATION W/ ALUMINUM COVER, AND TAMPER SWITCH.

REGISTERED PROFESSIONAL ENGINEER JONATHAN F. BERGHOLZ NO. 60229 EXP. 6/30/12 CIVIL STATE OF CALIFORNIA

JBY #0622-15

JB YOUNG & ASSOCIATES
CONSULTANT ENGINEERS
11440 RIVERSIDE DRIVE, SUITE M
LAKESIDE, CA 92040
619-448-9424
619-448-4690 (FAX)

DATE	SUB	DESCRIPTION	BY	A'PD
05/10/12		NASA EDITS - DELTA 1 (1)	TSS	TSS
07/22/11	C	100% FINAL DESIGN		
06/30/11	B	95% NEAR-FINAL DESIGN		
01/31/11	A	30% PRELIMINARY DESIGN		

NATIONAL AERONAUTICS AND SPACE ADMINISTRATION
DRYDEN FLIGHT RESEARCH CENTER
EDWARDS, CA

DRAWING TITLE
NOTES FOR UTILITY PLAN #10

PROJECT TITLE
REPAIR CENTER-WIDE FIRE MAINS
DESIGN SUBMITTAL "C"

APPROVALS	DATE
Chief, Facilities Engineering & Asset Mgmt. Office	5-10-12
Project Requestor/Customer	5-10-12
Facilities Project Manager	5-10-12
Chief, Office of Protective Services	5/10/12
Chief - Safety, Health and Environmental Office	5-10-12
DFRC Chief Information Officer	10 May 12

DATE STRTD	7/23/10	DATE PRNTD	7/22/11
DRAWN BY	JFB		EDM-1697
SCALE	AS NOTED	TRADE Sh. No.	C-10.1
FILE NAME		SHEET No.	17 of 37

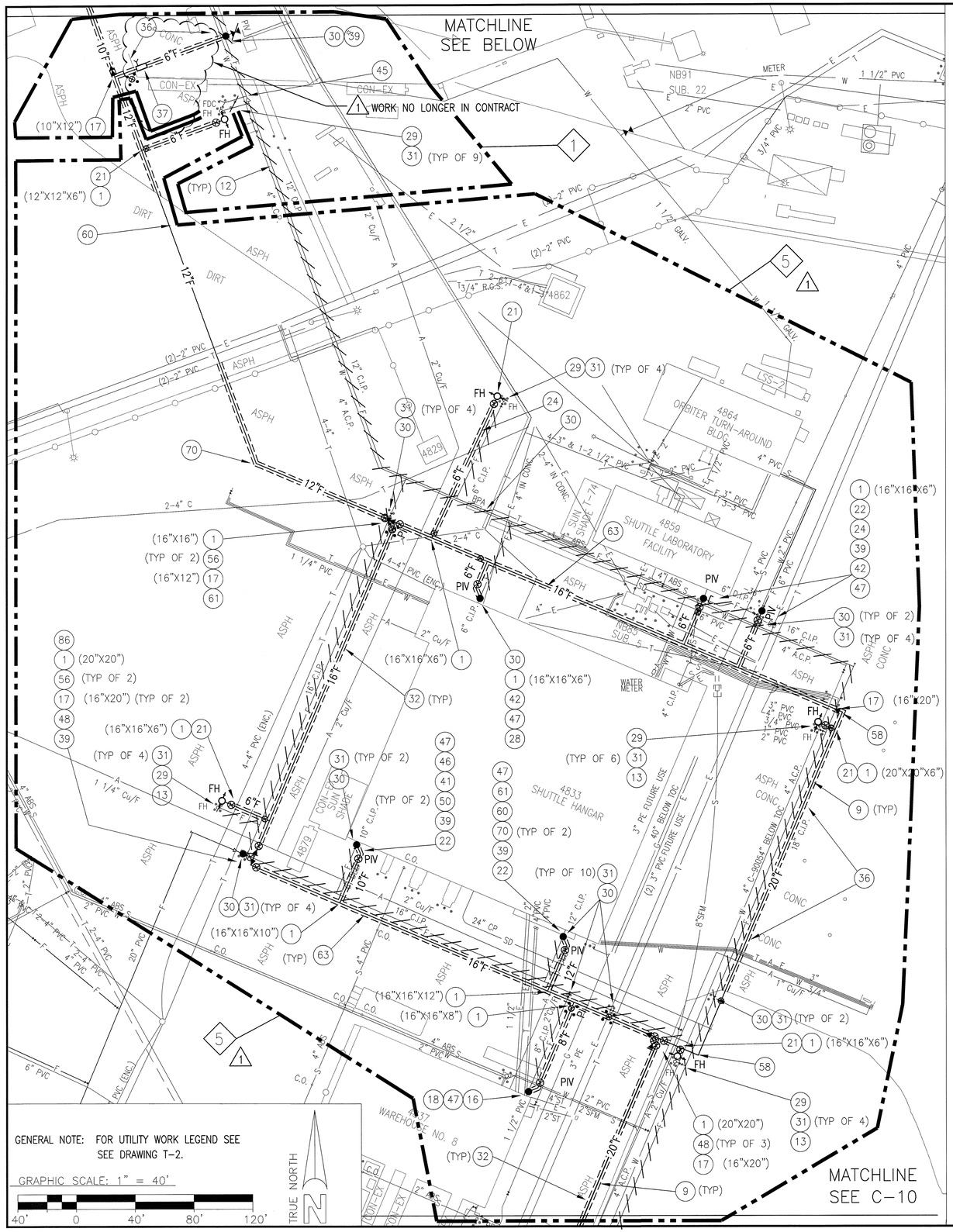

XX

NOTES:

1) INSTALL NEW DI PIPE TEE & TB (SIZE PER PLAN), SEE DETAIL 3 C-11 | C-13
9) INSTALL NEW 20" PVC FIRE WATER PIPE, SEE DETAIL 1 C-11 | C-13
12) ABANDON EXISTING FIRE WATER PIPE IN PLACE.
13) CLOSE VALVE. REMOVE AND DISPOSE OF VALVE WELL AND CONC COLLAR IN DIRT AND ASPH PVMT AREAS. GRADE TO MATCH EXST IN DIRT AREAS. INSTALL ASPHALT PATCH IN ASPH PVMT AREAS. REMOVE VALVE COVER AND FILL WITH CONC IN CONC PVMT AREAS.
16) INSTALL NEW 8" GATE VALVE, SEE DETAIL 2 C-11 | C-13
17) INSTALL NEW DI PIPE REDUCER (SIZE PER PLAN).
18) REMOVE SECTION OF 8" PIPE. INSTALL (2) NEW 8" 45° BENDS WITH THRUST BLOCKS. INSTALL NEW 8" PVC PIPE. CONNECT TO EXISTING PIPE 3' CLEAR OF BUILDING WITH NEW ADAPTER COUPLING. SEE DETAIL 3 C-11 | C-13
21) INSTALL 6" GATE VALVE, 6" PVC PIPE, AND FIRE HYDRANT, SEE DETAIL 4 C-11 | C-13
22) CUT & CAP OR PLUG EXISTING PIPE, SEE DETAIL 1 C-11 | C-14
REMOVE AND DISPOSE OF UNUSED PIPE SECTION.
24) INSTALL NEW 6" PVC PIPE, SEE DETAIL 1 C-11 | C-13
28) REMOVE SECTION OF 6" PIPE. INSTALL (2) NEW 6" 45° BENDS WITH THRUST BLOCKS. INSTALL NEW 6" PVC PIPE. CONNECT TO EXISTING PIPE 3' CLEAR OF BUILDING WITH NEW ADAPTER COUPLING. SEE DETAIL 3 C-11 | C-13
29) REMOVE AND DISPOSE OF EXISTING FIRE HYDRANT AND RISER PIPE. CAP OR PLUG PIPE A MINIMUM OF 24" BELOW FINISHED GRADE. GRADE SITE TO MATCH EXST. IN PAVED AREAS, REPAIR ASPHALT OR CONC PVMT TO MATCH EXISTING.
30) REMOVE AND DISPOSE OF POST INDICTOR ASSEMBLY. CLOSE EXISTING VALVE. GRADE SITE TO MATCH EXST. IN PAVED AREAS, REPAIR ASPHALT OR CONC PVMT TO MATCH EXISTING.
31) REMOVE AND DISPOSE OF GUARD POST. GRADE SITE TO MATCH EXST. IN PAVED AREAS, REPAIR ASPHALT OR CONC PVMT TO MATCH EXISTING.
32) SAWCUT, REMOVE, DISPOSE AND REPLACE ASPHALT PAVEMENT, SEE DETAIL 1 C-11 | C-13
36) SAWCUT, REMOVE, DISPOSE AND REPLACE 16" THICK CONC PAVEMENT, SEE DETAIL 1 C-11 | C-15
37) INSTALL NEW CHECK VALVE, GATE VALVE, PIV AND FDC, IN EXISTING VAULT
39) CONNECT TO EXISTING PIPE WITH ADAPTER COUPLING.
41) INSTALL NEW 10" PVC PIPE, SEE DETAIL 1 C-11 | C-13
42) INSTALL NEW 6" GATE VALVE, SEE DETAIL 2 C-11 | C-13
45) REMOVE AND DISPOSE OF EXST MH OR VAULT, FDC ON PIPE RISER, & VALVING. CAP OR PLUG FCD PIPE RISER A MINIMUM OF 24" BELOW FINISHED GRADE, SEE DETAIL 4 C-11 | C-15
46) INSTALL NEW 10" GATE VALVE, SEE DETAIL 2 C-11 | C-13
47) INSTALL NEW POST INDICATOR, SEE DETAIL 5 C-11 | C-13
48) INSTALL NEW 20" BUTTERFLY VALVE, SEE DETAIL 2 C-11 | C-13
50) INSTALL NEW 10" 45° BEND WITH TB, SEE DETAIL 3 C-11 | C-13
51) INSTALL NEW 10" 22.5° BEND WITH TB, SEE DETAIL 3 C-11 | C-13
56) INSTALL NEW 16" BUTTERFLY VALVE, SEE DETAIL 2 C-11 | C-13
57) PROTECT EXISTING FENCING IN PLACE.
58) INSTALL NEW 20" 90° DI BEND AND THRUST BLOCK, SEE DETAIL 3 C-11 | C-13
60) INSTALL NEW 12" PVC PIPE, SEE DETAIL 1 C-11 | C-13
61) INSTALL NEW 12" GATE VALVE, SEE DETAIL 2 C-11 | C-13
63) INSTALL NEW 16" PVC PIPE, SEE DETAIL 1 C-11 | C-13
65) INSTALL NEW 10" 11.25° BEND WITH TB, SEE DETAIL 3 C-11 | C-13
70) INSTALL NEW 12" 45° BEND WITH TB, SEE DETAIL 3 C-11 | C-13
86) INSTALL NEW 16" 90° BEND WITH TB, SEE DETAIL 3 C-11 | C-13

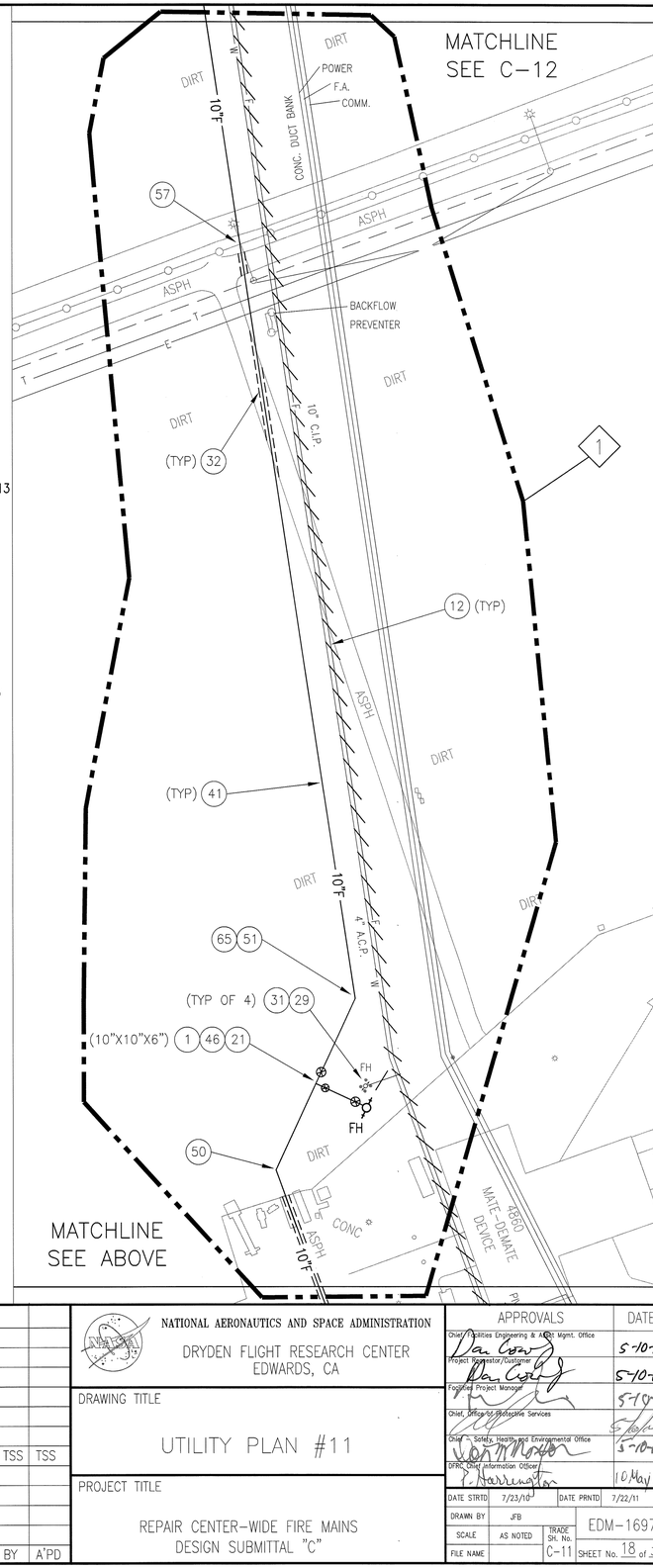

REGISTERED PROFESSIONAL ENGINEER
JONATHAN E. BERGER
NO. 60229
EXP. 6/30/12
CIVIL
STATE OF CALIFORNIA

JBY #0622-15

JB YOUNG & ASSOCIATES
CONSULTANT ENGINEERS
11440 RIVERSIDE DRIVE, SUITE M
LAKESIDE, CA 92040
619-448-9424
619-448-4690 (FAX)

DATE	SUB	DESCRIPTION	BY	A'PD
05/10/12		NASA EDITS – DELTA 1 (1)	TSS	TSS
07/22/11	C	100% FINAL DESIGN		
06/30/11	B	95% NEAR-FINAL DESIGN		
01/31/11	A	30% PRELIMINARY DESIGN		

NATIONAL AERONAUTICS AND SPACE ADMINISTRATION
DRYDEN FLIGHT RESEARCH CENTER
EDWARDS, CA

DRAWING TITLE
UTILITY PLAN #11

PROJECT TITLE
REPAIR CENTER-WIDE FIRE MAINS
DESIGN SUBMITTAL "C"

APPROVALS	DATE
Chief, Facilities Engineering & Asset Mgmt. Office	5-10-12
Project Inspector/Customer	5-10-12
Facilities Project Manager	5-7-12
Chief, Office of Protective Services	5-7-12
Chief, Safety, Health and Environmental Office	5-10-12
DFRC Chief Information Officer	10 May 12

DATE STRTD	7/23/10	DATE PRNTD	7/22/11
DRAWN BY	JFB		EDM-1697
SCALE	AS NOTED	TRADE SH. No.	C-11
FILE NAME		SHEET No.	18 of 37

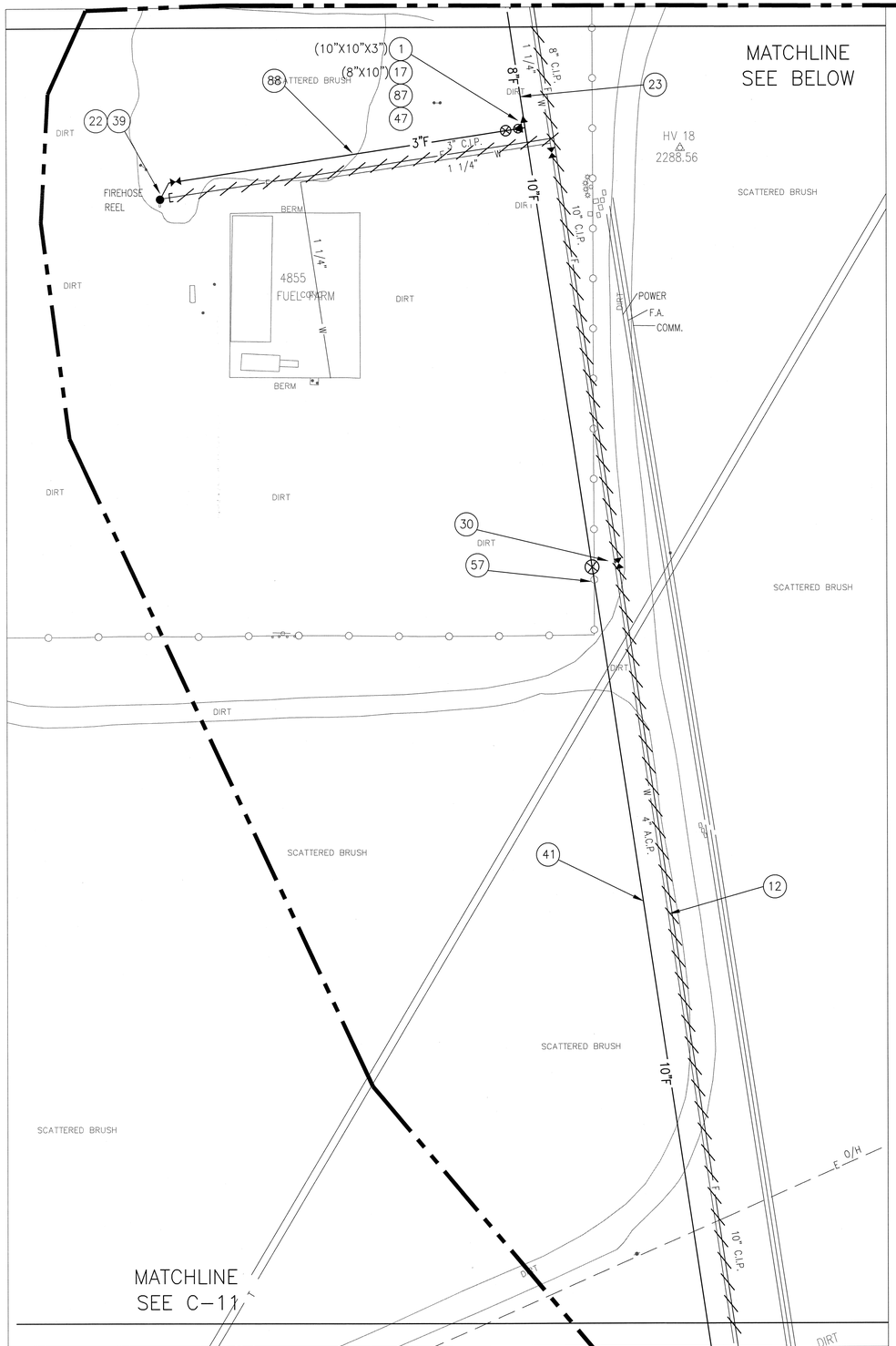

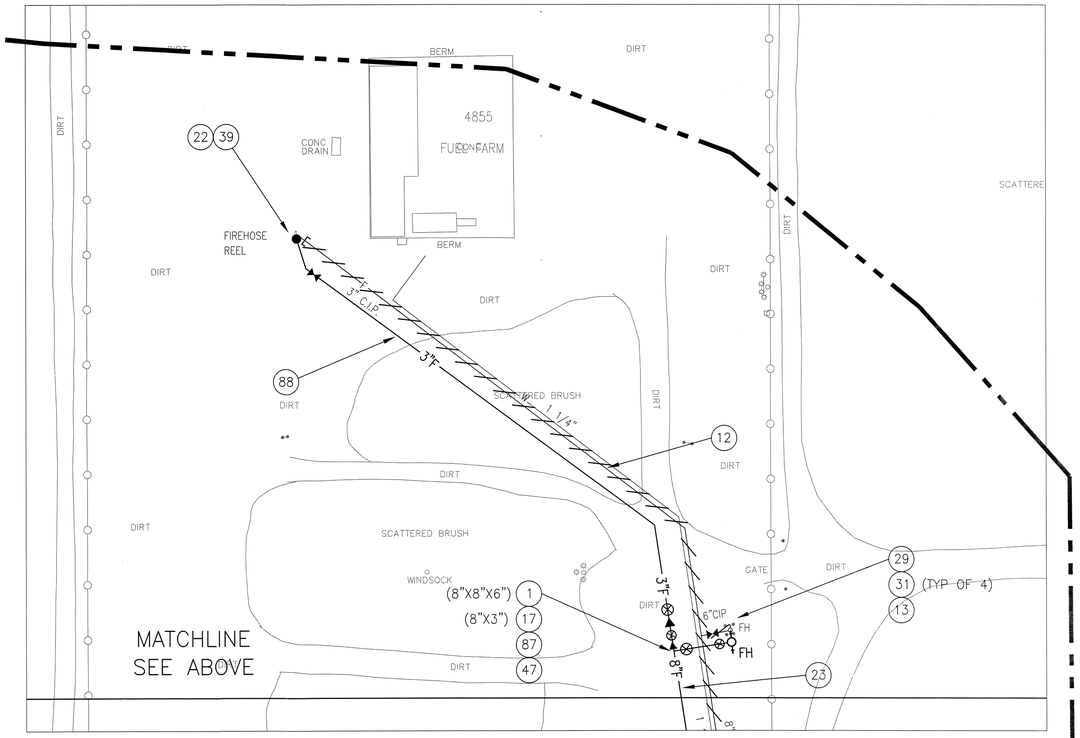

XX NOTES:

1) INSTALL NEW DI PIPE TEE & TB (SIZE PER PLAN), SEE DETAIL 3 C-12 | C-13
12) ABANDON EXISTING FIRE WATER PIPE IN PLACE.
13) CLOSE VALVE. REMOVE AND DISPOSE OF VALVE WELL AND CONC COLLAR IN DIRT AND ASPH PVMT AREAS. GRADE TO MATCH EXST IN DIRT AREAS. INSTALL ASPHALT PATCH IN ASPH PVMT AREAS. REMOVE VALVE COVER AND FILL WITH CONC IN CONC PVMT AREAS.
17) INSTALL NEW DI PIPE REDUCER (SIZE PER PLAN).
22) CUT & CAP OR PLUG EXISTING PIPE, SEE DETAIL 1 C-12 | C-14
REMOVE AND DISPOSE OF UNUSED PIPE SECTION.
23) INSTALL NEW 8" PVC PIPE, SEE DETAIL 1 C-12 | C-13
29) REMOVE AND DISPOSE OF EXISTING FIRE HYDRANT AND RISER PIPE. CAP OR PLUG PIPE A MINIMUM OF 24" BELOW FINISHED GRADE. GRADE SITE TO MATCH EXST. IN PAVED AREAS, REPAIR ASPHALT OR CONC PVMT TO MATCH EXISTING.
30) REMOVE AND DISPOSE OF POST INDICTOR ASSEMBLY. CLOSE EXISTING VALVE. GRADE SITE TO MATCH EXST. IN PAVED AREAS, REPAIR ASPHALT OR CONC PVMT TO MATCH EXISTING.
31) REMOVE AND DISPOSE OF GUARD POST. GRADE SITE TO MATCH EXST. IN PAVED AREAS, REPAIR ASPHALT OR CONC PVMT TO MATCH EXISTING.
39) CONNECT TO EXISTING PIPE WITH ADAPTER COUPLING.
41) INSTALL NEW 10" PVC PIPE, SEE DETAIL 1 C-12 | C-13
47) INSTALL NEW POST INDICATOR, SEE DETAIL 4 - | C-13
57) PROTECT EXISTING FENCING IN PLACE.
87) INSTALL NEW 3" GATE VALVE, SEE DETAIL 2 C-12 | C-13
88) INSTALL NEW 3" PVC PIPE, SEE DETAIL 1 C-12 | C-13

GENERAL NOTE: FOR UTILITY WORK LEGEND SEE DRAWING T-2.

GRAPHIC SCALE: 1" = 40'

40' 0 40' 80' 120'

TRUE NORTH

N

REGISTERED PROFESSIONAL ENGINEER
JONATHAN E. BERNOCHI
NO. 60229
EXP. 6/30/12
CIVIL
STATE OF CALIFORNIA

JBY #0622-15

JB YOUNG & ASSOCIATES
CONSULTANT ENGINEERS
11440 RIVERSIDE DRIVE, SUITE M
LAKESIDE, CA 92040
619-448-9424
619-448-4690 (FAX)

DATE	SUB	DESCRIPTION	BY	A'PD
07/22/11	C	100% FINAL DESIGN		
06/30/11	B	95% NEAR-FINAL DESIGN		
01/31/11	A	30% PRELIMINARY DESIGN		

NATIONAL AERONAUTICS AND SPACE ADMINISTRATION
DRYDEN FLIGHT RESEARCH CENTER
EDWARDS, CA

DRAWING TITLE
UTILITY PLAN #12

PROJECT TITLE
REPAIR CENTER-WIDE FIRE MAINS
DESIGN SUBMITTAL "C"

APPROVALS	DATE
Chief, Facilities Engineering & Asset Mgmt. Office	2-1-12
Project Requestor/Customer	2-1-12
Facilities Project Manager	1-31-12
Chief, Office of Protective Services	02/01/12
Chief - Safety, Health and Environmental Office	2-1-12
DFRC Chief Information Officer	1 Feb 12

DATE STRTD	7/23/10	DATE PRNTD	7/22/11
DRAWN BY	JFB		EDM-1697
SCALE	AS NOTED	TRADE SH. No. C-12	SHEET No. 19 of 37
FILE NAME			

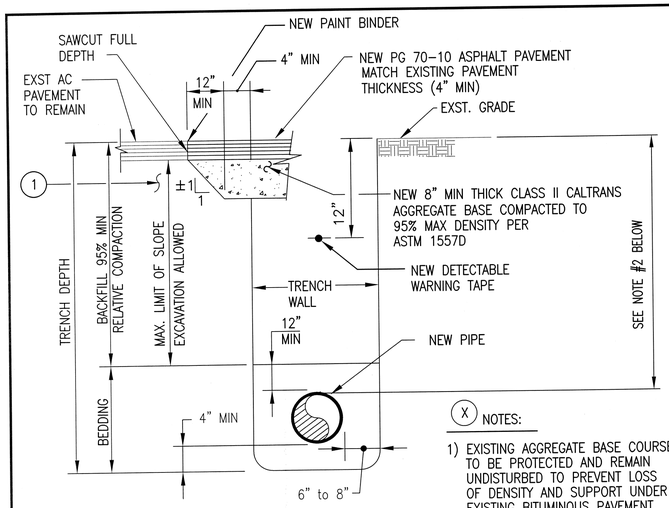

TYPICAL UTILITY TRENCH

DETAIL 1 — NO SCALE — C-1 TO C-12 | C-13

(X) NOTES:

1) EXISTING AGGREGATE BASE COURSE TO BE PROTECTED AND REMAIN UNDISTURBED TO PREVENT LOSS OF DENSITY AND SUPPORT UNDER EXISTING BITUMINOUS PAVEMENT.
2) MIN DEPTH = 48" FOR NEW 20"ø TO 12"ø FIRE WATER MAINS.
   MIN DEPTH = 42" FOR NEW 10"ø TO 8"ø FIRE WATER MAINS.
   MIN DEPTH = 36" FOR NEW 6"ø TO 3"ø FIRE WATER MAINS.
3) FOR NEW PIPING UNDER EXISTING CONCRETE PAVEMENT, SEE CONC PVMT REPAIR DETAIL 2 — C-13 | C-14 — 1 — C-13 | C-15
4) FOR TYP UTILITY CROSSING, SEE 4 — C-13 | C-17

BREAK-AWAY SPOOL

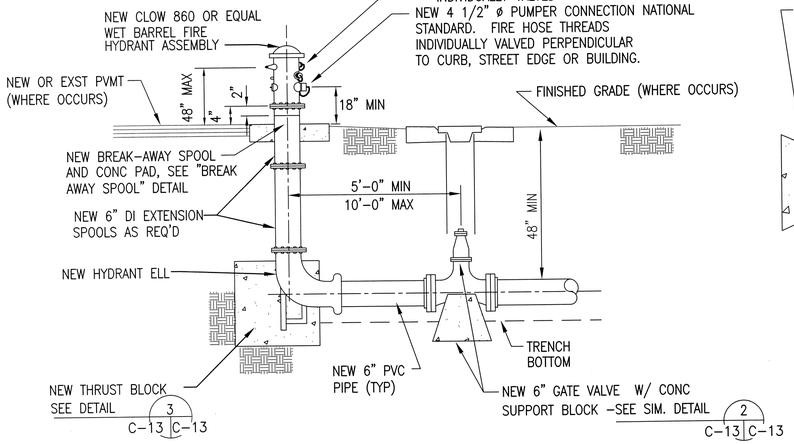

NOTE: INSTALL (4) FOUR NEW GUARD POSTS TO PROTECT NEW FIRE HYDRANT, SEE DETAIL 6 — C-13 | C-13

NEW FIRE HYDRANT ASSEMBLY

DETAIL 4 — NO SCALE — C-3 TO C-11 | C-13

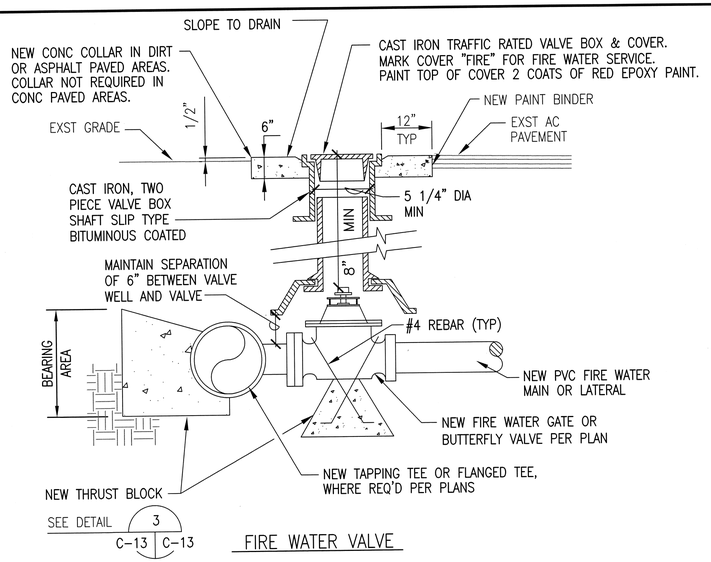

FIRE WATER VALVE

DETAIL 2 — NO SCALE — C-3 TO C-13 | C-13

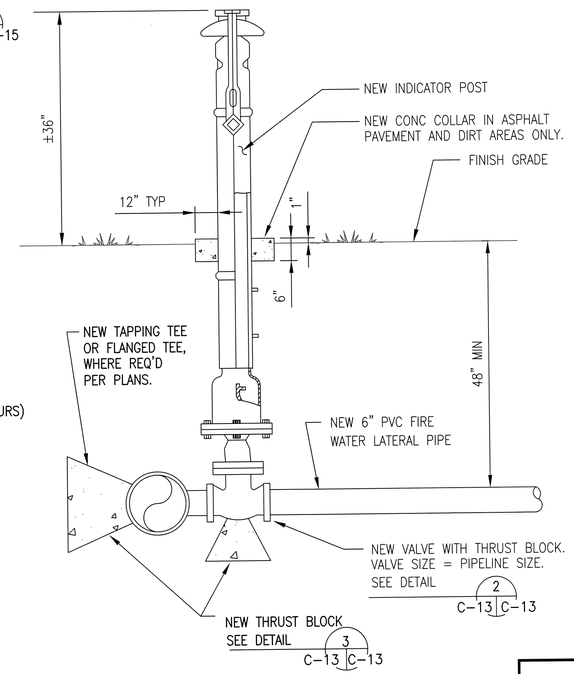

NOTE: INSTALL (4) FOUR NEW GUARD POSTS TO PROTECT NEW PIV, SEE DETAIL 6 — C-13 | C-13

SECTION
POST INDICATOR VALVE

DETAIL 5 — NO SCALE — C-3 TO C-11 | C-13

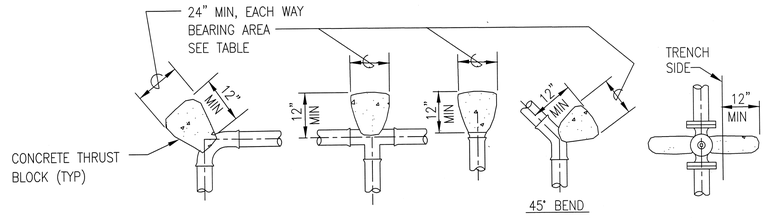

PIPE SIZE	FITTINGS 90°	45°	22 1/2°	11 1/4°	TEE, CAP & GV	BEARING AREA (SQ. FEET)
3"	2.0	1.1	0.6	0.3	1.4	
4"	3.5	2.0	1.0	0.5	2.5	
6"	7.9	4.5	2.3	1.1	5.7	
8"	14.1	8.0	4.0	2.0	10.1	
12"	31.7	18.1	9.0	4.5	22.6	
16"	56.3	32.2	16.1	8.0	40.2	
18"	71.3	40.7	20.4	10.2	50.9	
20"	88.0	50.3	25.1	12.6	62.8	

NOTES:
1. MAX. ALLOWABLE SOIL PRESSURE (MASP) = 1000 PSF
2. DESIGN OPERATING PRESSURE (DOP) = 120 PSI
3. DESIGN TEST PRESSURE (DTP) = 200 PSI
4. CONCRETE THRUST BLOCKS SHALL NOT INFRINGE ON VALVE OPERATORS, BOLTS, ETC.
5. ALL THRUST BLOCK BEARING AREAS SHALL BE CARRIED TO UNDISTURBED SOIL.
6. THRUST BLOCKS SHALL BE USED AT CONNECTIONS BETWEEN EXISTING & NEW PIPE MAINS WHERE JOINTS ARE NOT RESTRAINED.

HORIZONTAL BEND THRUST BLOCK TABLE AND DETAILS

DETAIL 3 — NO SCALE — C-1 TO C-17 | C-13

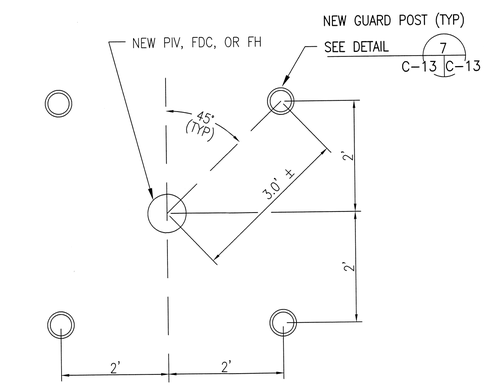

PLAN

GUARD POST PROTECTION

DETAIL 6 — NO SCALE — C-13 | C-13 — C-16

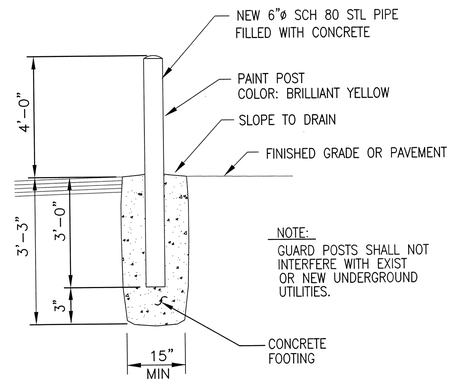

SECTION
GUARD POST

DETAIL 7 — NO SCALE — C-9, C-15 — C-13 | C-13

JBY #0622-15

JB YOUNG & ASSOCIATES
CONSULTANT ENGINEERS
11440 RIVERSIDE DRIVE, SUITE M
LAKESIDE, CA 92040
619-448-9424
619-448-4690 (FAX)

REGISTERED PROFESSIONAL ENGINEER — JONATHAN F. BERTRAM — NO. 60229 — EXP. 6/30/12 — CIVIL — STATE OF CALIFORNIA

DATE	SUB	DESCRIPTION	BY	A'PD
07/22/11	C	100% FINAL DESIGN		
06/30/11	B	95% NEAR-FINAL DESIGN		
01/31/11	A	30% PRELIMINARY DESIGN		

NATIONAL AERONAUTICS AND SPACE ADMINISTRATION
DRYDEN FLIGHT RESEARCH CENTER
EDWARDS, CA

DRAWING TITLE
CIVIL DETAILS

PROJECT TITLE
REPAIR CENTER-WIDE FIRE MAINS
DESIGN SUBMITTAL "C"

APPROVALS	DATE
Chief, Facilities Engineering & Asset Mgmt. Office	2-1-12
Project Engineer/Customer	2-1-12
Facilities Project Manager	1-31-12
Chief, Office of Protective Services	02/01/12
Chief - Safety, Health and Environmental Office	2-1-12
DFRC Chief Information Officer	1 Feb 12

DATE STRTD	7/23/10	DATE PRNTD	7/22/11
DRAWN BY	JFB		EDM-1697
SCALE	AS NOTED	TRADE SH. No.	C-13
FILE NAME			SHEET No. 20 of 37

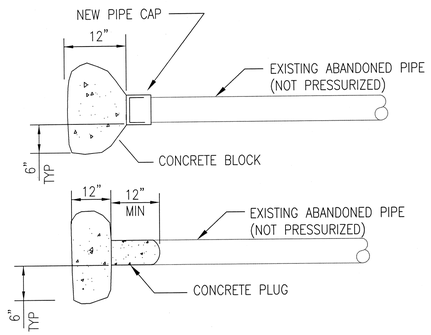

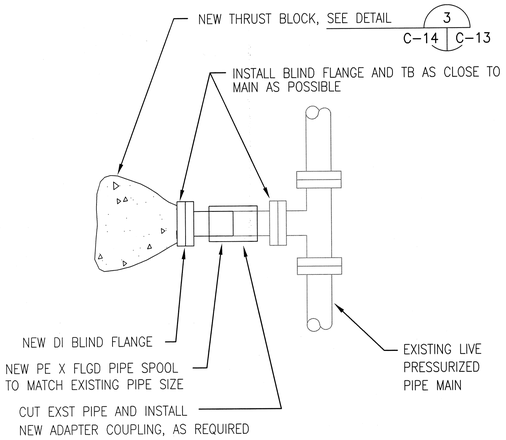

NOTES:

1) ALL ABANDONED PIPING SHALL BE CAPPED OR PLUGGED.

CAP EXST ABANDONED PIPE

DETAIL 1 — NO SCALE — C-1 TO C-12 | C-14

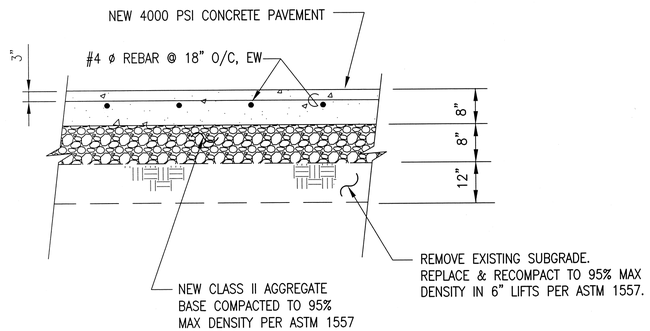

NOTES:

1) INSTALL DOWELED EXPANSION JOINT ALONG SAWCUT LINE, SEE DETAIL 3 — C-14 | C-14

NEW CONCRETE PAVEMENT

DETAIL 2 — NO SCALE — C-13 | C-14

C-4
C-8
C-10.1

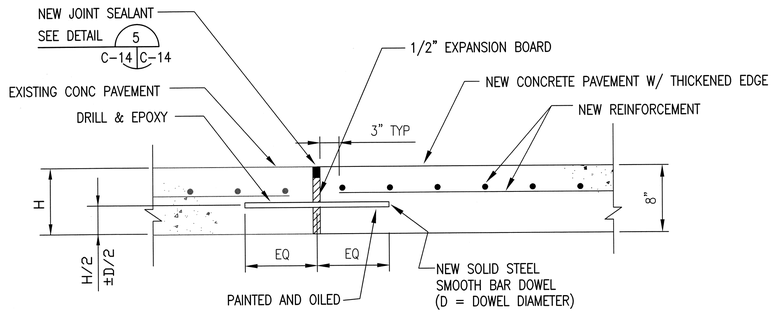

PAVEMENT THICKNESS H, INCHES	DOWEL SIZE AND SPACING – INCHES		
	DIAMETER – D SOLID SMOOTH BAR	LENGTH l	SPACING S
8" TO 11.5"	1"	20"	18"

EXPANSION JOINT (EJ) - DOWELED

DETAIL 3 — NO SCALE — C-14 | C-14

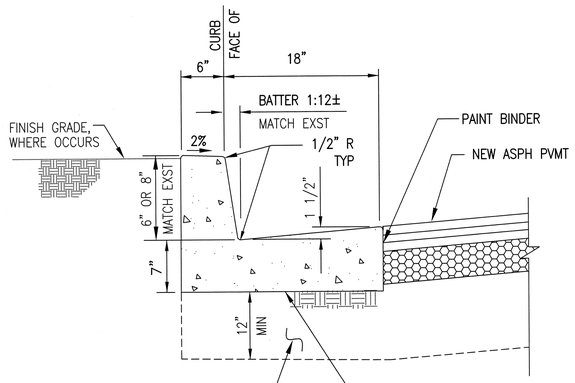

NOTES:

1. REPLACE EXPANSION & WEAKENED PLANE JOINTS TO MATCH EXST CONDITIONS, SEE DETAIL 5 — C-14 | C-14

REPAIR CONCRETE CURB & GUTTER

DETAIL 4 — NO SCALE — C-6 | C-14

C-7
C-9
C-10.1

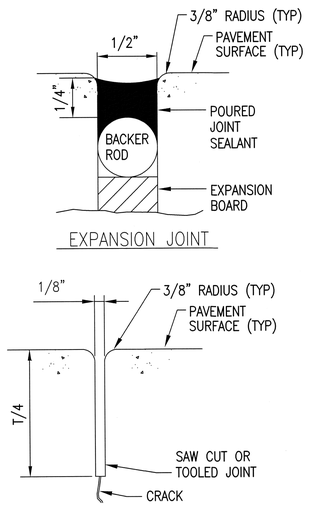

EXPANSION JOINT

WEAKENED PLANE JOINT

1) DIAMETER OF BACKER MATERIAL = W + 1/8"
2) TOP OF SEALANT SHALL BE 1/4" TO 1/16" BELOW TOP OF PVMT.
3) T=PAVEMENT OR SIDEWALK THICKNESS.

CONC PAVEMENT JOINTS

DETAIL 5 — NO SCALE — C-14 | C-14

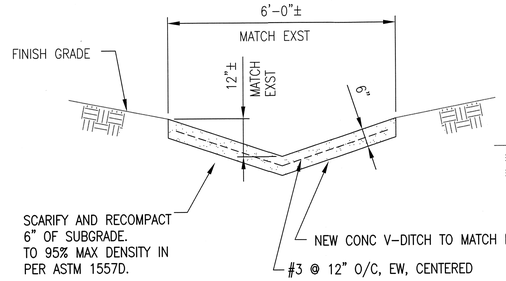

NOTES:

1. REPLACE EXPANSION & WEAKENED PLANE JOINTS TO MATCH EXST CONDITIONS, SEE DETAIL 5 — C-14 | C-14

REPAIR CONCRETE V-DITCH

DETAIL 7 — NO SCALE — C-5.1 | C-14

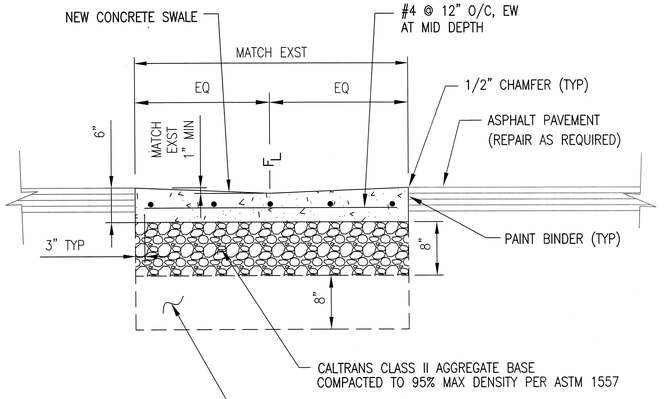

NOTES:

1. REPLACE EXPANSION & WEAKENED PLANE JOINTS TO MATCH EXST CONDITIONS, SEE DETAIL 5 — C-14 | C-14

REPAIR CONC SWALE

DETAIL 6 — NO SCALE — C-3 | C-14

C-6
C-7

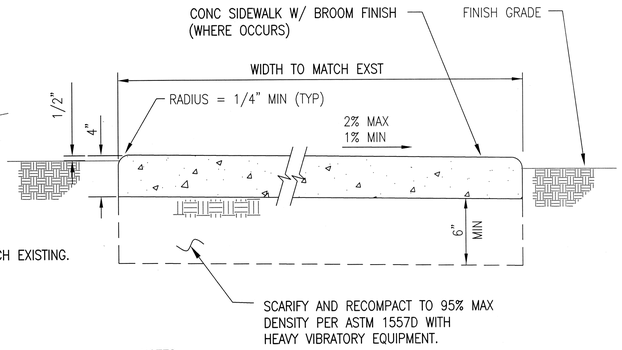

NOTES:

1. REPLACE EXPANSION & WEAKENED PLANE JOINTS TO MATCH EXST CONDITIONS, SEE DETAIL 5 — C-14 | C-14

REPAIR CONCRETE SIDEWALK

DETAIL 8 — NO SCALE — C-5.1 | C-14

C-6, C-7, C-9, C-10.1

REGISTERED PROFESSIONAL ENGINEER — JONATHAN F. BERTSCHI — NO. 60229 — EXP. 6/30/12 — CIVIL — STATE OF CALIFORNIA

JBY #0622-15

JB YOUNG & ASSOCIATES
CONSULTANT ENGINEERS
11440 RIVERSIDE DRIVE, SUITE M
LAKESIDE, CA 92040
619-448-9424
619-448-4690 (FAX)

DATE	SUB	DESCRIPTION	BY	A'PD
07/22/11	C	100% FINAL DESIGN		
06/30/11	B	95% NEAR-FINAL DESIGN		
01/31/11	A	30% PRELIMINARY DESIGN		

NATIONAL AERONAUTICS AND SPACE ADMINISTRATION
DRYDEN FLIGHT RESEARCH CENTER
EDWARDS, CA

DRAWING TITLE

CIVIL DETAILS

PROJECT TITLE

REPAIR CENTER-WIDE FIRE MAINS
DESIGN SUBMITTAL "C"

APPROVALS	DATE
Chief, Facilities Engineering & Asset Mgmt. Office	2-1-12
Project Inspector/Customer	2-1-12
Facilities Project Manager	1-31-12
Chief, Office of Equipment Services	02/01/12
Chief - Safety, Health and Environmental Office	2-1-12
DFRC Chief Information Officer	1 Feb 12

DATE STRTD	7/23/10	DATE PRNTD	7/22/11
DRAWN BY	JFB		EDM-1697
SCALE	AS NOTED	TRADE SH. No.	C-14
FILE NAME			SHEET No. 21 of 37

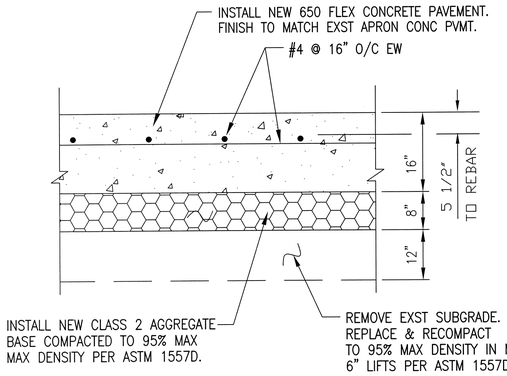

REINFORCED

TAXIWAY CONCRETE PAVEMENT

NOTES:

1) INSTALL DOWELED EXPANSION JOINT ALONG SAWCUT LINE, SEE DETAIL 2 C-15 | C-15

DETAIL 1 — NO SCALE — C-5.1 | C-15; C-8; C-11; C-13

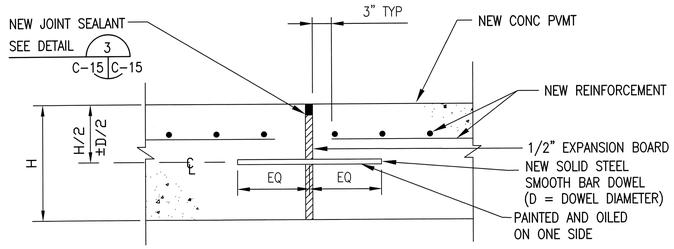

PAVEMENT THICKNESS H, INCHES	DOWEL SIZE AND SPACING – INCHES		
	DIAMETER – D SOLID SMOOTH BAR	LENGTH l	SPACING S
16"	1 1/2"	20"	18"

EXPANSION JOINT (EJ) – DOWELED

TRANSVERSE

DETAIL 2 — NO SCALE — C-15 | C-15

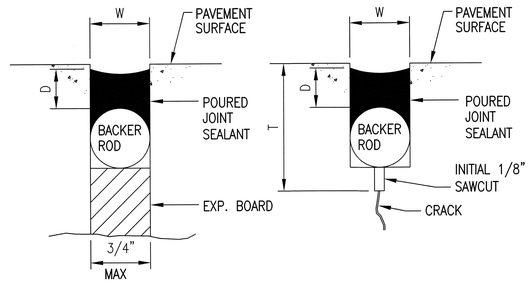

EXPANSION JOINT — CONTRACTION JOINT — CONSTRUCTION JOINT

POURED JOINT SEALANT DETAILS

FOR AIRCRAFT RIGID PAVEMENT

DETAIL 3 — NO SCALE — C-15 | C-15

NOTES:

1) W = WIDTH OF SEALANT RESERVOIR (MIN = 1/2", MAX = 5/8").
2) D = DEPTH OF SEALANT. 1.0 TO 1.5 X W. FOR POURED SEALANT. 0.5 X W FOR SILICONE SEALANT.
3) T = DEPTH OF INITIAL SAWCUT TYPE JOINT FORMER (CONTRACTION JOINT). T = 1/6 SLAB THICKNESS FOR PAVEMENTS MORE THAN 18" THICK.
4) DIAMETER OF BACKER MATERIAL = W + 1/8".
5) TOP OF SEALANT SHALL BE 1/4" TO 1/16" BELOW TOP OF PVMT.
6) JOINT SEALANT MATERIAL SHALL BE ONE OF THE FOLLOWING:
   A) ASTM D 116 HOT APPLIED JET FUEL RESISTANT SEALANT
   B) FED SPEC SS-S-200 TWO-COMPONENT COLD-APPLIED FUEL-RESISTANT SEALANT.

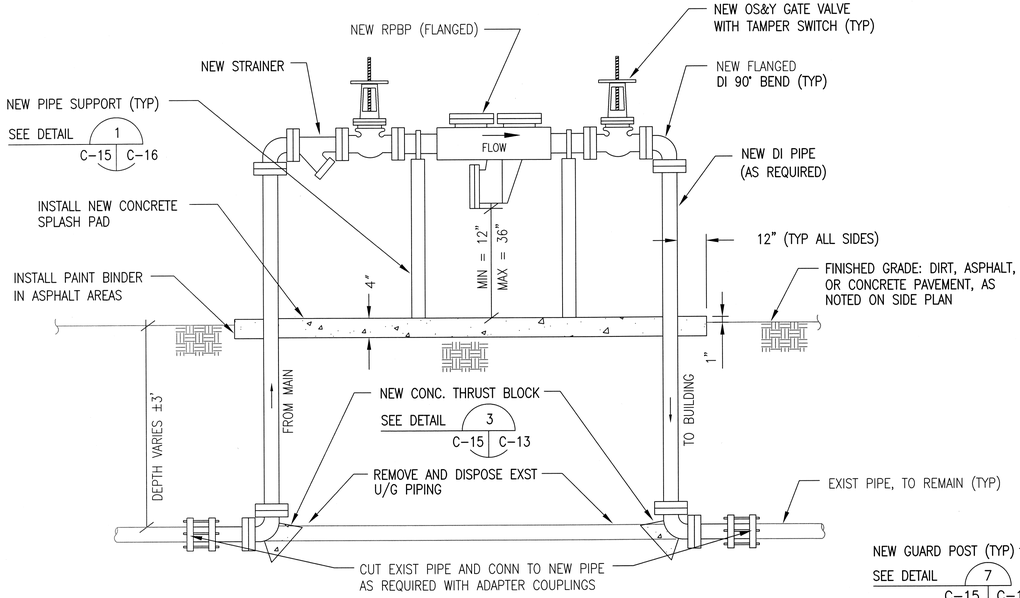

NOTES:

1) NEW RPBP SIZE PER PLAN.
2) NEW PIPE, FITTINGS, AND STRAINER SIZE SHALL MATCH RPBP SIZE.
3) ALL NEW RPBP'S SHALL BE TESTED AND CERTIFIED AFTER INSTALLATION. CONTRACTOR SHALL DELIVER ALL TESTING FORMS TO THE CONTRACTING OFFICER.
4) RPBP SHALL HAVE A MIN 12" CLEARANCE ON ALL SIDES.
5) ALL ABOVE GROUND PIPING AND APPURTENANCES SHALL BE INSULATED. DO NOT BLOCK DRAIN OR MANUFACTURERS DATA.
6) WRAP PIPE THROUGH CONCRETE WITH 30# FELT.
7) INSTALL GUARD POST PROTECTION, SEE DETAIL 7 C-15 | C-15

NEW RPBP FOR DOMESTIC WATER

DETAIL 5 — NO SCALE — C-10.1 | C-15

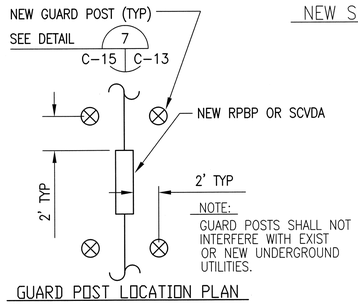

NOTE: GUARD POSTS SHALL NOT INTERFERE WITH EXIST OR NEW UNDERGROUND UTILITIES.

GUARD POST LOCATION PLAN

DETAIL 7 — NO SCALE — C-15 | C-15

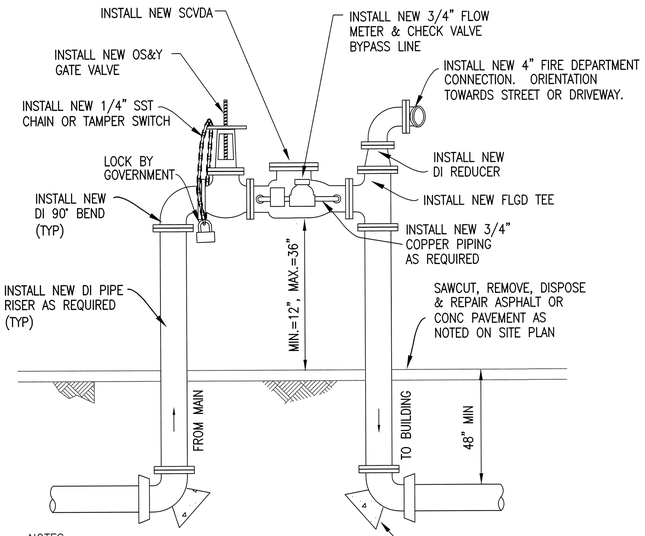

NOTES:

1) NEW SCVDA, A/G PIPE, FITTINGS, AND VALVE SIZE SHALL MATCH LATERAL PIPE SIZE.
2) SCVDA SHALL HAVE A MIN 12" CLEARANCE ON ALL SIDES.
3) ALL ABOVE GROUND PIPING AND APPURTENANCES SHALL BE INSULATED.
4) WRAP PIPE THROUGH CONCRETE WITH 30# FELT.
5) INSTALL GUARD POST PROTECTION, SEE DETAIL 7 C-15 | C-15

NEW SINGLE CHECK VALVE DETECTOR ASSEMBLY (SCVDA)

DETAIL 6 — NO SCALE — C-9 | C-15; C-10.1 C-11

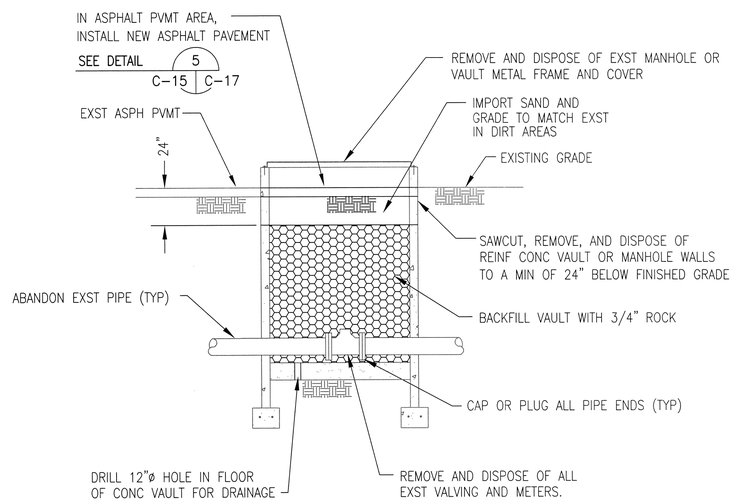

DEMOLISH EXISTING UTILITY VAULT

DETAIL 4 — NO SCALE — C-2 | C-15

C-3; C-5.1; C-8; C-9; C-10; C-11

REGISTERED PROFESSIONAL ENGINEER — JONATHAN F. BERKSHIRE — NO. 60229 — EXP. 6/30/12 — CIVIL — STATE OF CALIFORNIA

JBY #0622-15

JB YOUNG & ASSOCIATES
CONSULTANT ENGINEERS
11440 RIVERSIDE DRIVE, SUITE M
LAKESIDE, CA 92040
619-448-9424
619-448-4690 (FAX)

DATE	SUB	DESCRIPTION	BY	A'PD
07/22/11	C	100% FINAL DESIGN		
06/30/11	B	95% NEAR-FINAL DESIGN		
01/31/11	A	30% PRELIMINARY DESIGN		

NATIONAL AERONAUTICS AND SPACE ADMINISTRATION

DRYDEN FLIGHT RESEARCH CENTER
EDWARDS, CA

DRAWING TITLE

CIVIL DETAILS

PROJECT TITLE

REPAIR CENTER-WIDE FIRE MAINS
DESIGN SUBMITTAL "C"

APPROVALS	DATE
Chief, Facilities Engineering & Asset Mgmt Office	2-1-12
Project Requestor/Customer	2-1-12
Facilities Project Manager	1-31-12
Chief, Office of Protective Services	02/01/12
Chief, Safety, Health and Environmental Office	2-1-12
DFRC Chief Information Officer	1 Feb 12

DATE STRTD	7/23/10	DATE PRNTD	7/22/11
DRAWN BY	JFB		EDM-1697
SCALE	AS NOTED	TRADE SH. No.	C-15
FILE NAME			SHEET No. 22 of 37

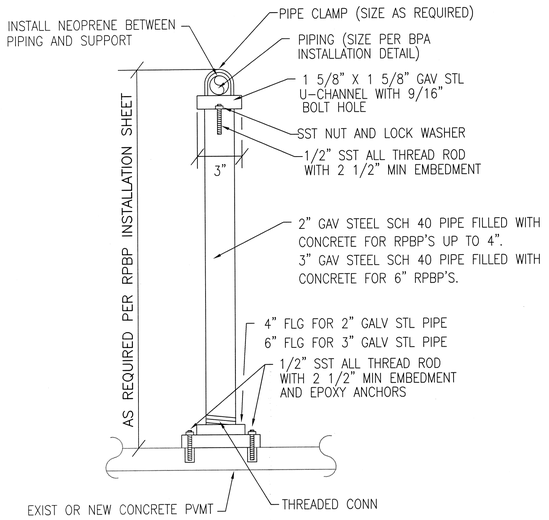

PIPE SUPPORT DETAIL

DETAIL 1 — NO SCALE — C-15 | C-16 — C-16

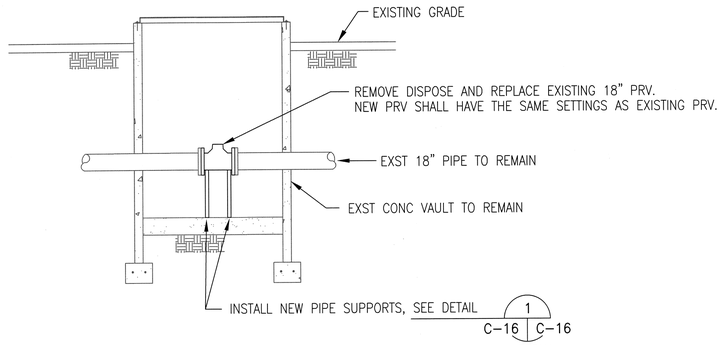

NOTE: CONTRACTOR SHALL VERIFY EXISTING PRV SIZE BEFORE ORDERING ANY MATERIAL. NEW PRV SIZE SHALL MATCH EXISTING PRV SIZE.

REPLACE PRV INSIDE VAULT

DETAIL 2 — NO SCALE — C-10.1 | C-16

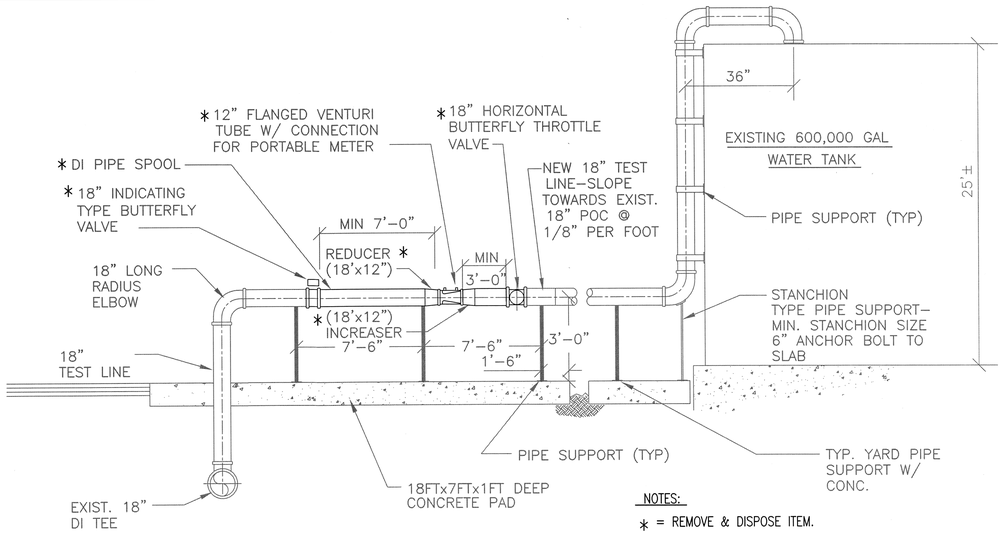

NOTES:
∗ = REMOVE & DISPOSE ITEM.

DEMOLISH EXISTING FLOW METER AND PIPING

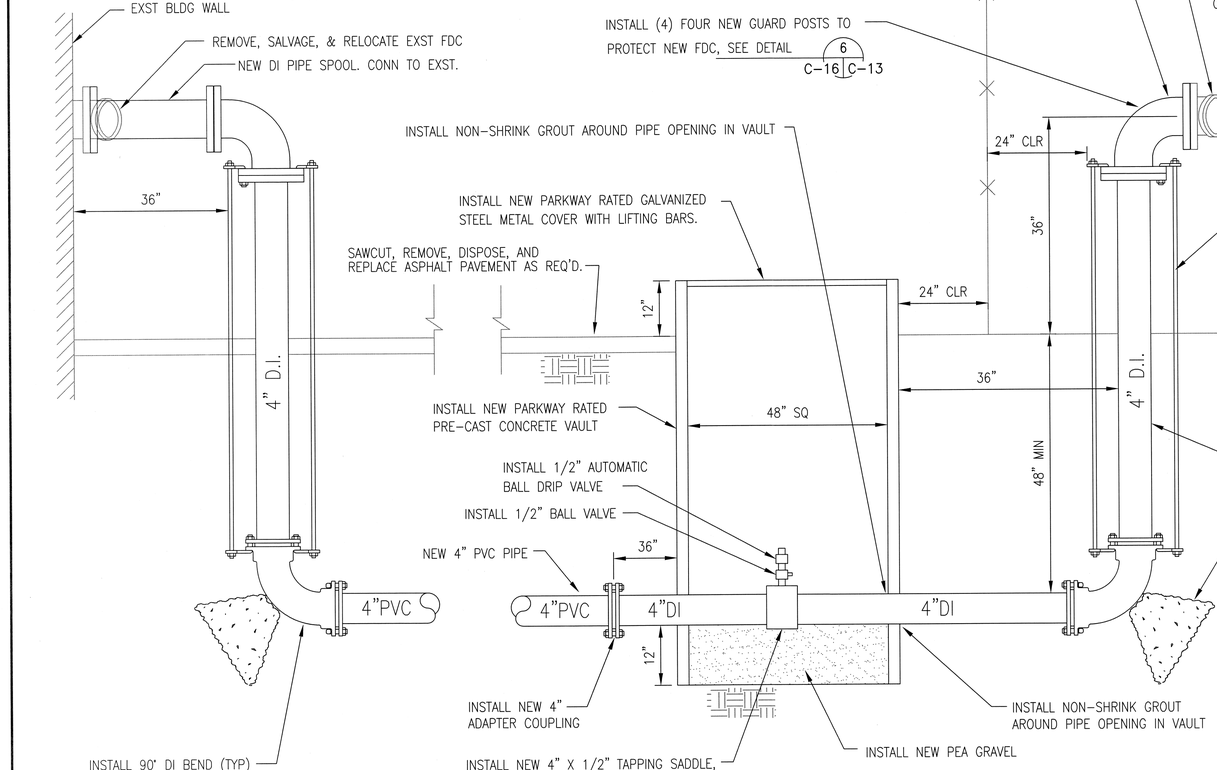

RELOCATE BLDG FDC

DETAIL 4 — NO SCALE — C-3 | C-16

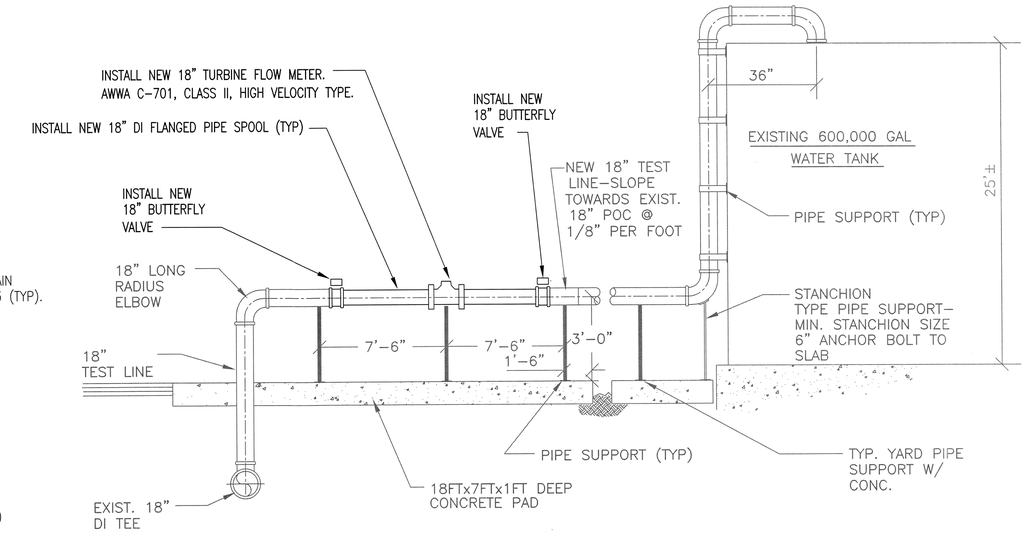

INSTALL NEW FLOW METER AND PIPING

DETAIL 3 — NO SCALE — C-10.1 | C-16

JOHNATHAN F. BERNINGHAUSEN — REGISTERED PROFESSIONAL ENGINEER — NO. 60229 — EXP. 6/30/12 — CIVIL — STATE OF CALIFORNIA

JBY #0622-15

JB YOUNG & ASSOCIATES
CONSULTANT ENGINEERS
11440 RIVERSIDE DRIVE, SUITE M
LAKESIDE, CA 92040
619-448-9424
619-448-4690 (FAX)

DATE	SUB	DESCRIPTION	BY	A'PD
07/22/11	C	100% FINAL DESIGN		
06/30/11	B	95% NEAR-FINAL DESIGN		
01/31/11	A	30% PRELIMINARY DESIGN		

NATIONAL AERONAUTICS AND SPACE ADMINISTRATION
DRYDEN FLIGHT RESEARCH CENTER
EDWARDS, CA

DRAWING TITLE
CIVIL DETAILS

PROJECT TITLE
REPAIR CENTER-WIDE FIRE MAINS
DESIGN SUBMITTAL "C"

APPROVALS	DATE
Chief, Facilities Engineering & Asset Mgmt. Office	2-1-12
Project Requestor/Customer	2-1-12
Facilities Project Manager	1-31-12
Chief, Office of Protective Services	02/01/12
Chief, Safety, Heathful Environmental Office	2-1-12
DFRC Chief Information Officer	1 Feb12

DATE STRTD	7/23/10	DATE PRNTD	7/22/11
DRAWN BY	JFB		EDM-1697
SCALE	AS NOTED	TRADE SH. No.	C-16
FILE NAME		SHEET No.	23 of 37

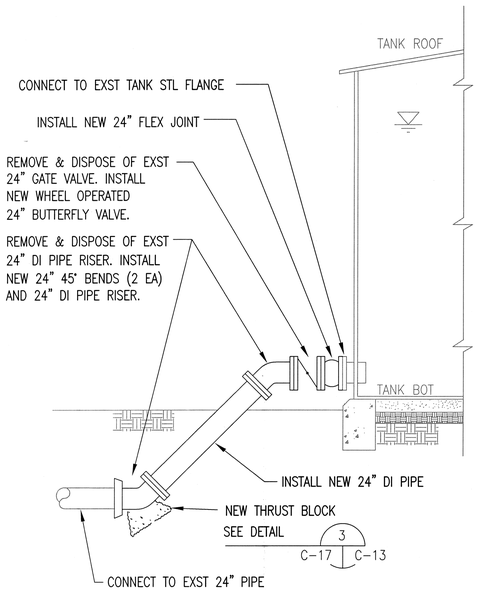

NEW PIPE RISER AT TANK NB 103

DETAIL 1 — NO SCALE — C-1 | C-17

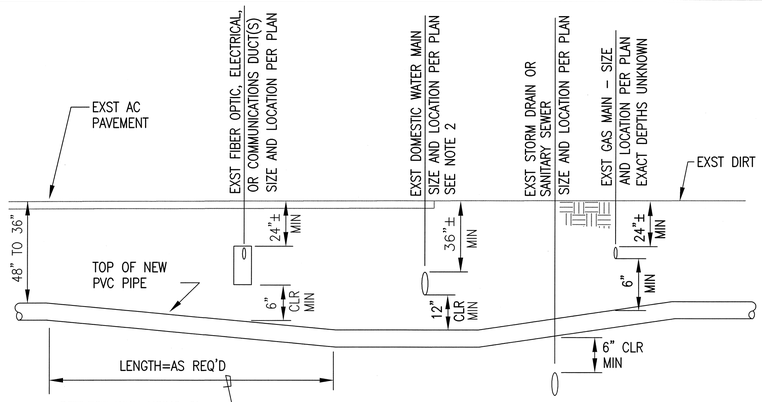

TYPICAL UTILITY UNDERCROSSING

DETAIL 4 — NO SCALE — C-13 | C-17

NOTES:

1. ALTERNATE TO PIPE DEFLECTION CAN BE WITH VERTICAL RESTRAINED BENDS, OR HIGH DEFLECTION COUPLINGS PER MFR.

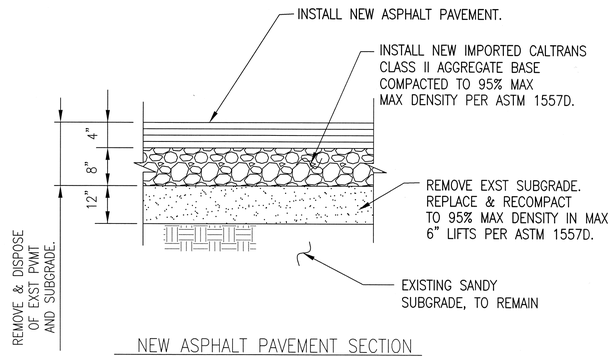

NEW ASPHALT PAVEMENT SECTION

DETAIL 5 — NO SCALE — C-5.1 | C-17 | C-15

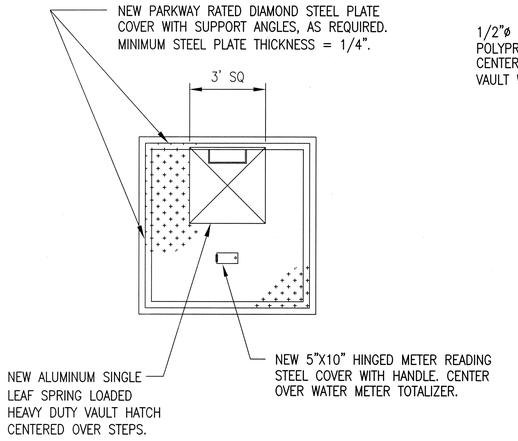

VAULT COVER PLAN

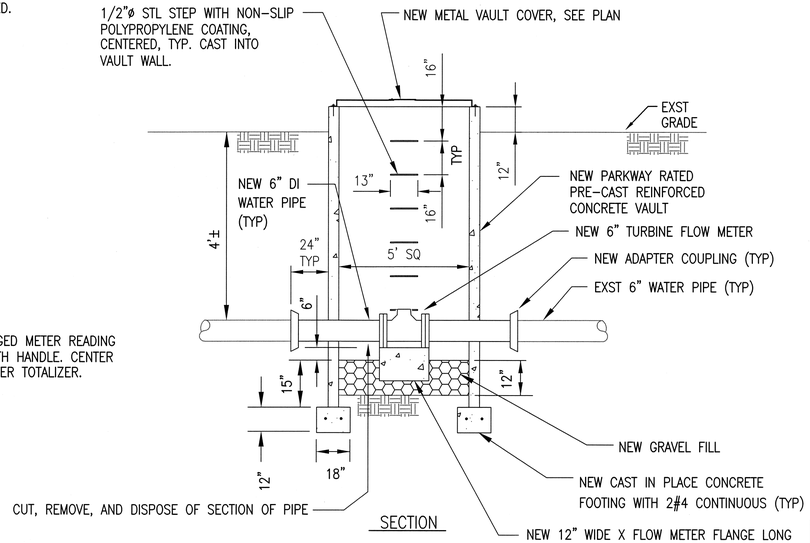

SECTION

NOTES:

1) REMOVE AND DISPOSE OF EXISTING PIPING AS REQUIRED FOR NEW METER AND GATE VALVE INSTALLATION.
2) ALL NEW PIPING INSIDE VAULT SHALL BE DUCTILE IRON.
3) INSTALL ASPHALTIC COATING BETWEEN ALL ALUMINUM AND STEEL COVER ITEMS.

NEW TANK FILL LINE WATER METER & VAULT

DETAIL 2 — NO SCALE — C-1 | C-17 — C-10.1

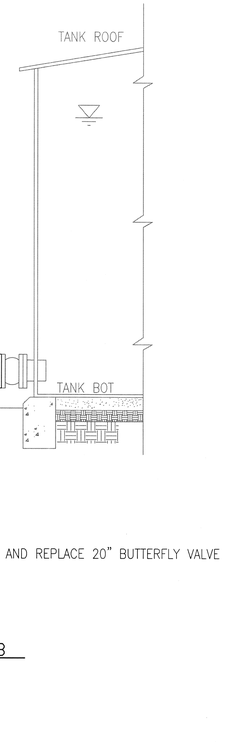

NEW PIPE RISER AT TANK NB 108

DETAIL 3 — NO SCALE — C-1 | C-17

REGISTERED PROFESSIONAL ENGINEER — JOSHUA F. BROOKS — NO. 60229 — EXP. 6/30/12 — CIVIL — STATE OF CALIFORNIA

JBY #0622-15

JB YOUNG & ASSOCIATES
CONSULTANT ENGINEERS
11440 RIVERSIDE DRIVE, SUITE M
LAKESIDE, CA 92040
619-448-9424
619-448-4690 (FAX)

DATE	SUB	DESCRIPTION	BY	A'PD
07/22/11	C	100% FINAL DESIGN		
06/30/11	B	95% NEAR-FINAL DESIGN		
01/31/11	A	30% PRELIMINARY DESIGN		

NATIONAL AERONAUTICS AND SPACE ADMINISTRATION
DRYDEN FLIGHT RESEARCH CENTER
EDWARDS, CA

DRAWING TITLE
CIVIL DETAILS

PROJECT TITLE
REPAIR CENTER-WIDE FIRE MAINS
DESIGN SUBMITTAL "C"

APPROVALS	DATE
Chief, Facilities Engineering & Asset Mgmt. Office	2-1-12
Project Requestor/Customer	2-1-12
Facilities Project Manager	1-31-12
Chief, Office of Protective Services	02/01/12
Chief - Safety, Health and Environmental Office	2-1-12
DFRC Chief Information Officer	1 Feb 12

DATE STRTD	7/23/10	DATE PRNTD	7/22/11
DRAWN BY	JFB		
SCALE	AS NOTED	TRADE SH. No.	C-17
FILE NAME			EDM-1697
		SHEET No.	24 of 37

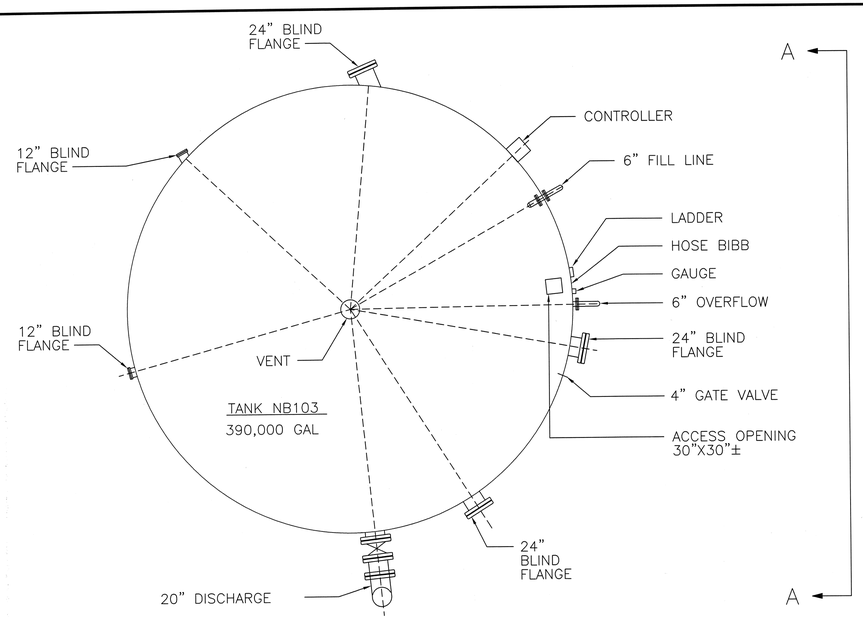

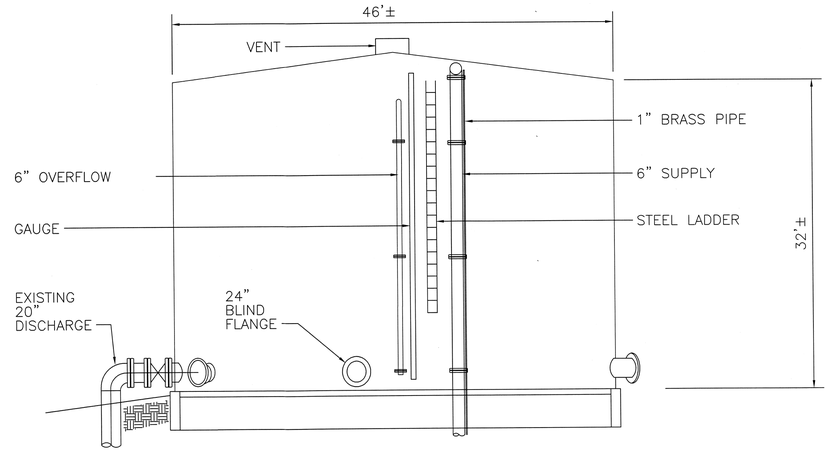

ELEVATION A–A

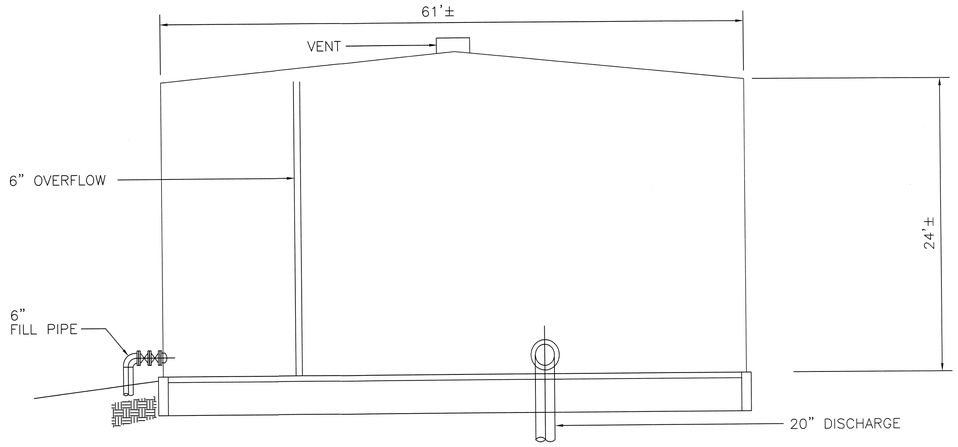

ELEVATION B–B

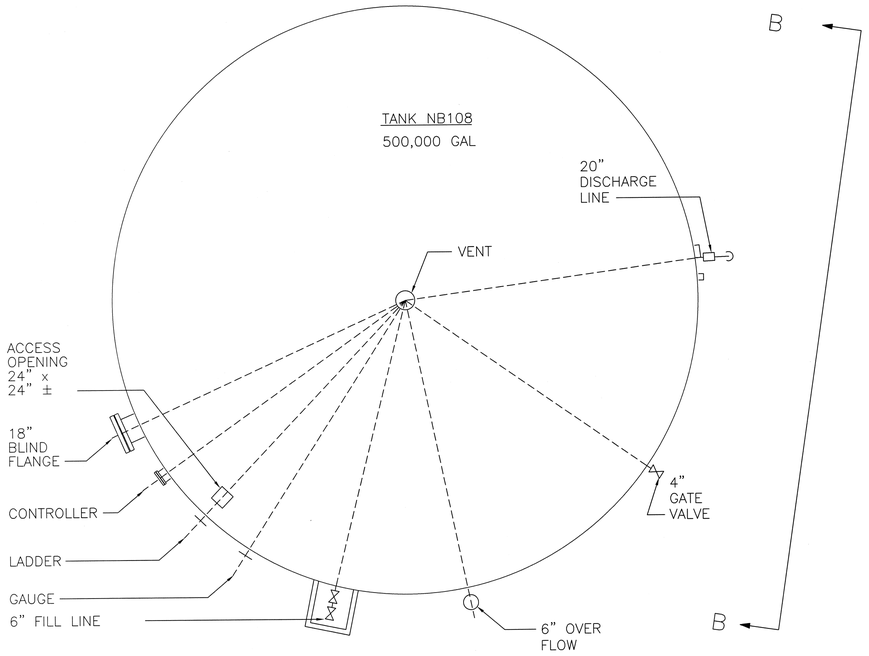

NOTE: ALL FEATURES SHOWN ARE EXISTING.

PLAN
NO SCALE
1 / C-1 | C-18

NOTES:

1. CONTRACTOR SHALL SANDBLAST AND REMOVE ALL LOOSE DEBRIS FROM EXTERIOR OF TANKS NB 108 & NB103 AND ALL ABOVE GROUND TANK APPURTANCES. CONTRACTOR SHALL THEN PAINT TANK EXTERIORS AND ALL ABOVE GROUND TANK APPURTANCES TO MATCH EXISTING COLOR AND PAINT PATTERN. EXISTING TANKS HAVE TWO COLOR PAINT PATTERN. CONTRACTOR SHALL PAINT TANK NUMBER ON SIDE OF TANK TO MATCH TEXT SIZE & COLOR OF TANK NB114.
2. COORDINATE ALL TANK WORK WITH NASA. FIVE DAYS NOTICE REQUIRED PRIOR TO TANK WORK. CONTRACTOR SHALL SUBMIT TANK WORK SCHEDULE TO NASA FOR APPROVAL.
3. TANKS MUST BE SQUEEGEE–DRY PRIOR TO SAND BLASTING.
4. CONTRACTOR MUST LIMIT DAILY WORK TO AN AREA WHICH CAN BE SANDBLASTED AND PRIMED IN ONE DAY.
5. AFTER COMPLETION OF ALL TANK PAINTING WORK, THE CONTRACTOR SHALL REMOVE FROM EDWARDS AIR FORCE BASE ALL PAINTING EQUIPMENT, SURPLUS MATERIALS AND DEBRIS RESULTING FROM THIS WORK.
6. THE CONTRACTOR SHALL COMPLY WITH ALL RULES AND REGULATIONS BY AUTHORITIES HAVING JURISDICTION, INCLUDING PL 91–596, THE "OCCUPATIONAL SAFETY AND HEALTH ACT OF 1970".

REGISTERED PROFESSIONAL ENGINEER — JONATHAN F. BERKSHIRE — NO. 60229 — EXP. 6/30/12 — CIVIL — STATE OF CALIFORNIA

JBY #0622-15

JB YOUNG & ASSOCIATES
CONSULTANT ENGINEERS
11440 RIVERSIDE DRIVE, SUITE M
LAKESIDE, CA 92040
619-448-9424
619-448-4690 (FAX)

DATE	SUB	DESCRIPTION	BY	A'PD
07/22/11	C	100% FINAL DESIGN		
06/30/11	B	95% NEAR–FINAL DESIGN		
01/31/11	A	30% PRELIMINARY DESIGN		

NATIONAL AERONAUTICS AND SPACE ADMINISTRATION
DRYDEN FLIGHT RESEARCH CENTER
EDWARDS, CA

DRAWING TITLE
CIVIL DETAILS

PROJECT TITLE
REPAIR CENTER–WIDE FIRE MAINS
DESIGN SUBMITTAL "C"

APPROVALS	DATE
Chief, Facilities Engineering & Asset Mgmt. Office	2-1-12
Project Manager/Customer	2-1-12
Facilities Project Manager	1-31-12
Chief, Office of Protective Services	02/01/12
Chief – Safety, Health and Environmental Office	2-1-12
DFRC Chief Information Officer	1 Feb12

DATE STRTD	7/23/10	DATE PRNTD	7/22/11
DRAWN BY	JFB		EDM-1697
SCALE	AS NOTED	TRADE SH. No.	C-18
FILE NAME			SHEET No. 25 of 37

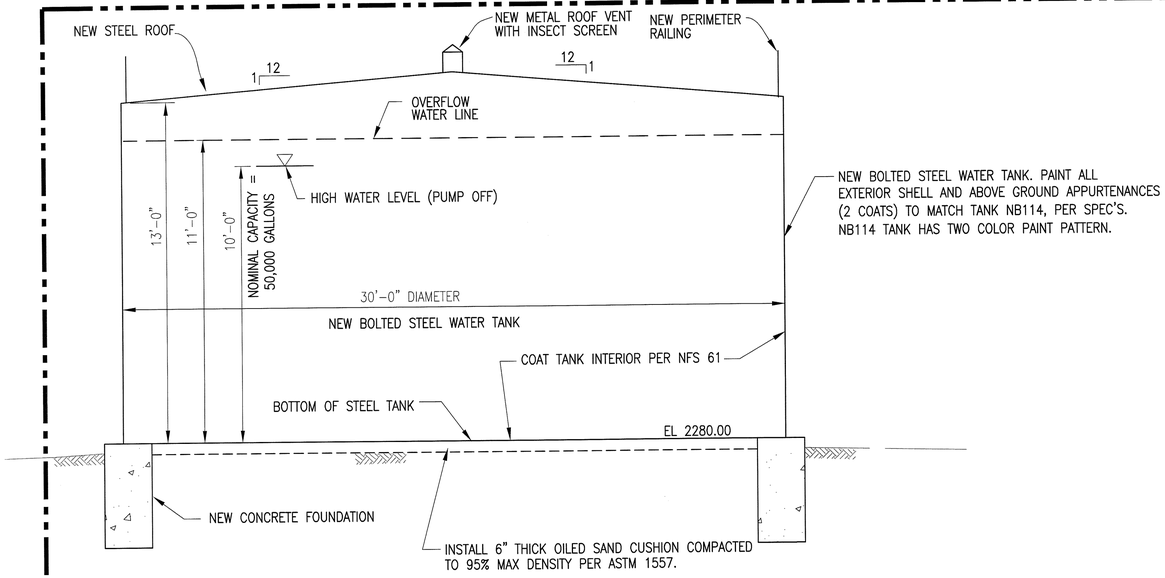

NOTES

1) ALL NEW ABOVE GROUND EXTERIOR PIPING SHALL BE PAINTED WITH 2 COATS OF PAINT (PER SPEC'S). COLORS AND PATTERN TO MATCH TANK NB114.
2) INSTALL NEW CATHODIC PROTECTION SYSTEM.
3) INSTALL NEW HEAVY DUTY LEVEL GAGE BOARD AND FLOAT.
4) INSTALL NEW EXTERIOR SHIPS LADDER WITH LOCKABLE ANTI-CLIMB DOOR.
5) INSTALL NEW OVERFLOW AND DRAIN PORTS AND STEEL PIPING. CONNECT TO NEARBY STORM DRAIN CHANNEL.
6) INSTALL NEW 20" SUCTION PIPE, 12" RE-CIRCULATION PIPE, AND 6" FILL PIPE PORTS.
7) INSTALL NEW 20" BUTTERFLY VALVE ON SUCTION PIPE WITH TAMPER SWITCH.
8) INSTALL NEW 12" GATE VALVE ON RE-CIRCULATION PIPE AND 6" GATE VALVE ON FILL PIPE PORT WITH TAMPER SWITCHES.
9) ANY NEW BELOW GROUND VALVES SHALL HAVE PIV AND TAMPER SWITCH.
10) CONTRACTOR SHALL SUBMIT FOR APPROVAL, BEFORE CONSTRUCTION, THE STRUCTURAL CALCULATIONS FOR CONCRETE TANK FOUNDATION AND ANCHOR BOLTS BASED ON THE ACTUAL BOLTED STEEL TANK STRUCTURE CHOSEN. CONTRACTOR SHALL HAVE CALCULATIONS STAMPED & SIGNED BY A REGISTERED CALIFORNIA STRUCTURAL ENGINEER.

NEW 50,000 GALLON BOLTED STEEL TANK

SECTION 1 / SCALE: NONE / C-10.1 | C-19

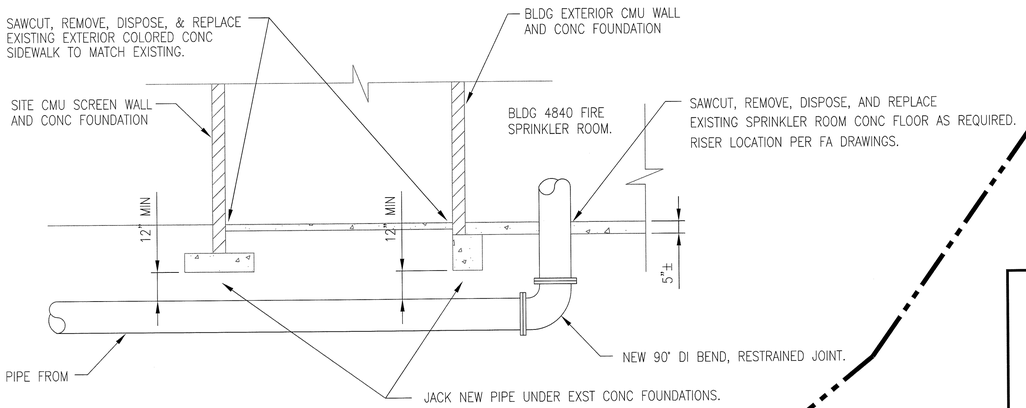

CONNECT NEW PIPING TO BLDG 4840 SPRINKLER ROOM

SECTION 3 / SCALE: NONE / C-10.1 | C-19

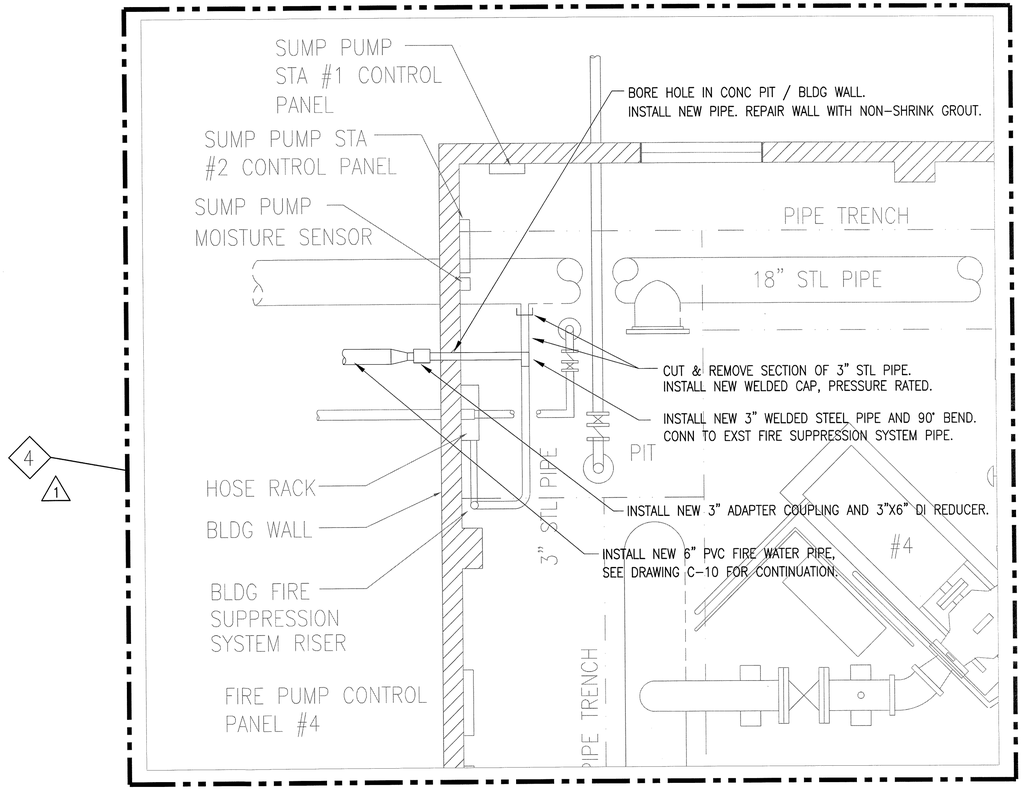

BUILDING 4853 - FIRE SUPPRESSION SYSTEM CONNECTION

PLAN 2 / SCALE: NONE / C-10.1 | C-19

REGISTERED PROFESSIONAL ENGINEER — JONATHAN B. YOUNG — NO. 60229 — EXP. 6/30/12 — CIVIL — STATE OF CALIFORNIA

JBY #0622-15

JB YOUNG & ASSOCIATES
CONSULTANT ENGINEERS
11440 RIVERSIDE DRIVE, SUITE M
LAKESIDE, CA 92040
619-448-9424
619-448-4690 (FAX)

DATE	SUB	DESCRIPTION	BY	A'PD
05/10/12		NASA EDITS - DELTA 1 (1)	TSS	TSS
07/22/11	C	100% FINAL DESIGN		
06/30/11	B	95% NEAR-FINAL DESIGN		
01/31/11	A	30% PRELIMINARY DESIGN		

NATIONAL AERONAUTICS AND SPACE ADMINISTRATION
DRYDEN FLIGHT RESEARCH CENTER
EDWARDS, CA

DRAWING TITLE
CIVIL DETAILS

PROJECT TITLE
REPAIR CENTER-WIDE FIRE MAINS
DESIGN SUBMITTAL "C"

APPROVALS	DATE
Chief, Facilities Engineering & Asset Mgmt. Office	5-10-12
Program Requestor/Customer	5-10-12
Facilities Project Manager	5-10-12
Chief, Office of Protective Services	5-10-12
Chief, Safety, Health and Environmental Office	5-10-12
DFRC Chief Information Officer	10 May 12

DATE STRTD	7/23/10	DATE PRNTD	7/22/11
DRAWN BY	JFB		EDM-1697
SCALE	AS NOTED	TRADE SH. No. C-19	
FILE NAME		SHEET No. 26 of 37	

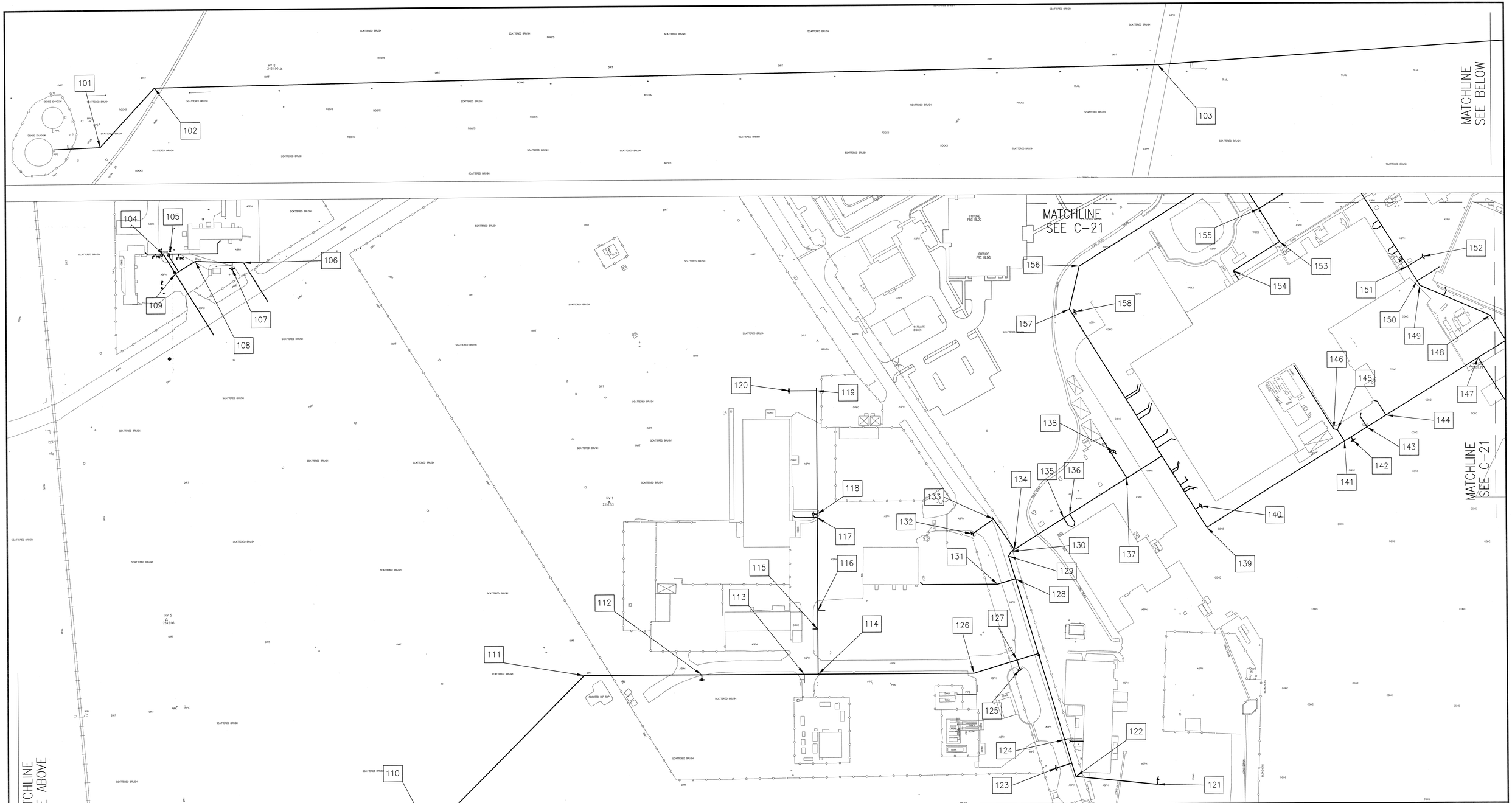

GENERAL NOTE: SEE DRAWING C-22 FOR HORIZONTAL LAYOUT DATA SCHEDULE.

GRAPHIC SCALE: 1" = 100'

100' 0 100' 200' 300'

TRUE NORTH

REGISTERED PROFESSIONAL ENGINEER
JONATHAN E. BERLINCHI
NO. 60229
EXP. 6/30/12
CIVIL
STATE OF CALIFORNIA

JBY #0622-15

JB YOUNG & ASSOCIATES
CONSULTANT ENGINEERS
11440 RIVERSIDE DRIVE, SUITE M
LAKESIDE, CA 92040
619-448-9424
619-448-4690 (FAX)

DATE	SUB	DESCRIPTION	BY	A'PD
07/22/11	C	100% FINAL DESIGN		
06/30/11	B	95% NEAR-FINAL DESIGN		
01/31/11	A	30% PRELIMINARY DESIGN		

NATIONAL AERONAUTICS AND SPACE ADMINISTRATION
DRYDEN FLIGHT RESEARCH CENTER
EDWARDS, CA

DRAWING TITLE

HORIZONTAL PIPE LAYOUT

PROJECT TITLE

REPAIR CENTER-WIDE FIRE MAINS
DESIGN SUBMITTAL "C"

APPROVALS	DATE
Chief, Facilities Engineering & Asset Mgmt. Office	2-1-12
Project Requestor/Customer	2-1-12
Facilities Project Manager	1-31-12
Chief, Office of Protective Services	02/01/12
Chief - Safety, Health and Environmental Office	2-1-12
DFRC Chief Information Officer	1 Feb 12

DATE STRTD	7/23/10	DATE PRNTD	7/22/11
DRAWN BY	JFB		EDM-1697
SCALE	AS NOTED	TRADE SH. No. C-20	SHEET No. 27 of 37
FILE NAME			

GENERAL NOTE: SEE DRAWING C-22 FOR HORIZONTAL LAYOUT DATA SCHEDULE.

GRAPHIC SCALE: 1" = 100'

100' 0 100' 200' 300'

TRUE NORTH

MATCHLINE SEE BELOW

MATCHLINE SEE C-20

MATCHLINE SEE C-20

MATCHLINE SEE C-22 - LINE A

MATCHLINE SEE C-22 - LINE B

MATCHLINE SEE ABOVE

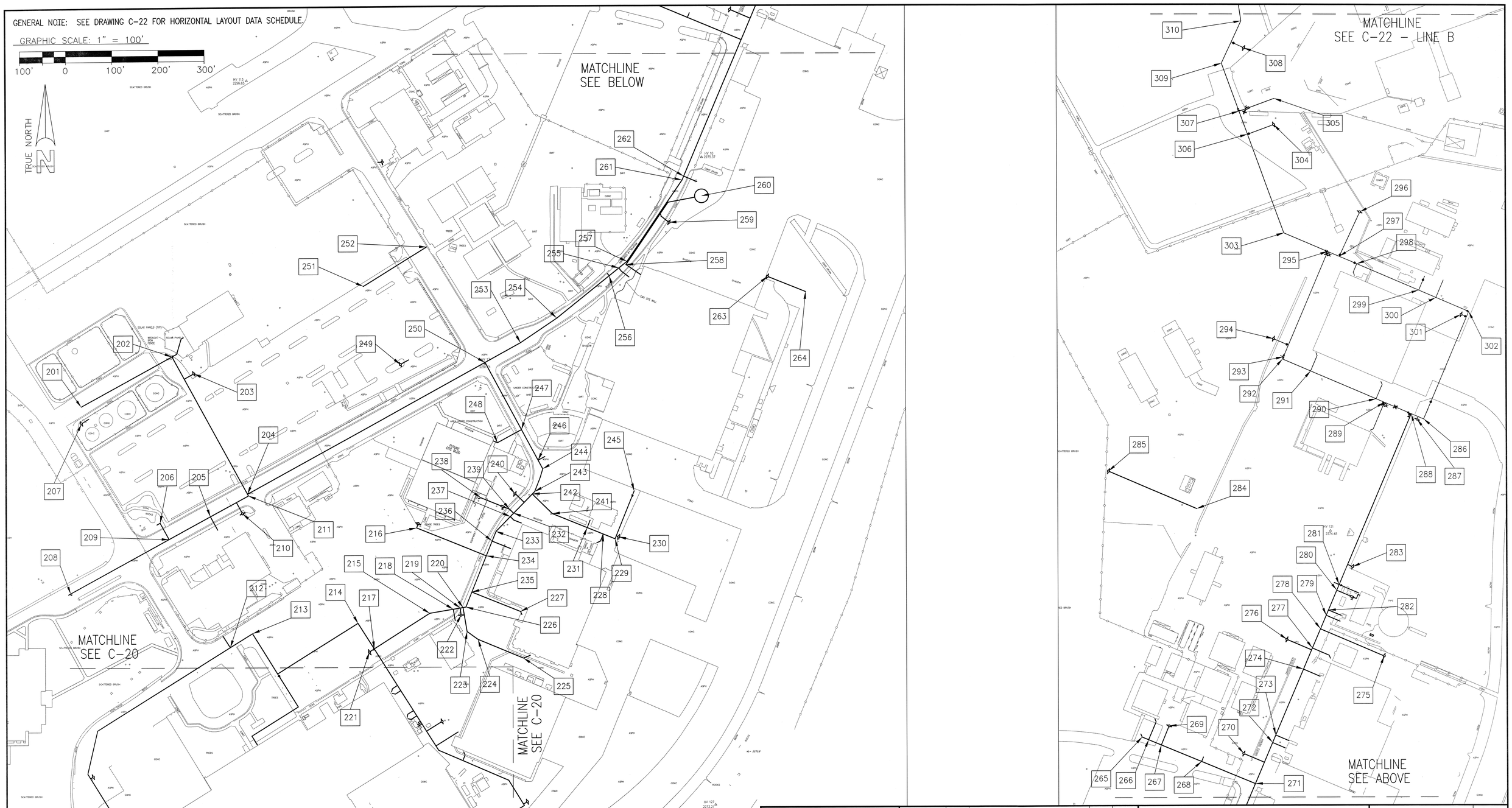

JBY #0622-15

REGISTERED PROFESSIONAL ENGINEER JOSHUA B. YOUNG NO. 60229 EXP. 6/30/12 CIVIL STATE OF CALIFORNIA

JB YOUNG & ASSOCIATES
CONSULTANT ENGINEERS
11440 RIVERSIDE DRIVE, SUITE M
LAKESIDE, CA 92040
619-448-9424
619-448-4690 (FAX)

DATE	SUB	DESCRIPTION	BY	A'PD
07/22/11	C	100% FINAL DESIGN		
06/30/11	B	95% NEAR-FINAL DESIGN		
01/31/11	A	30% PRELIMINARY DESIGN		

NATIONAL AERONAUTICS AND SPACE ADMINISTRATION
DRYDEN FLIGHT RESEARCH CENTER
EDWARDS, CA

DRAWING TITLE

HORIZONTAL PIPE LAYOUT

PROJECT TITLE

REPAIR CENTER-WIDE FIRE MAINS
DESIGN SUBMITTAL "C"

APPROVALS	DATE
Chief, Facilities Engineering & Asset Mgmt. Office	2-1-12
Project Requestor/Customer	2-1-12
Facilities Project Manager	1-31-12
Chief, Office of Protective Services	02/01/12
Chief - Safety, Health and Environmental Office	2-1-12
DFRC Chief Information Officer	1 Feb 12

DATE STRTD	7/23/10	DATE PRNTD	7/22/11
DRAWN BY	JFB	EDM-1697	
SCALE	AS NOTED	TRADE SH. No. C-21	SHEET No. 28 of 37
FILE NAME			

XX LAYOUT DATA

ITEM	NORTHERN	EASTERN
	DRAWING	C-20
101	2028252.34	526315.30
102	2028370.73	526443.00
103	2030547.26	526479.16
104	2031589.25	527843.11
105	2031602.24	527845.11
106	2031762.07	527825.01
107	2031737.07	527812.33
108	2031657.15	527828.81
109	2031614.36	527802.41
110	2032158.02	526589.89
111	2032495.92	526927.79
112	2032750.99	526927.79
113	2032972.90	526927.79
114	2033003.03	526927.79
115	2033003.03	527025.49
116	2033003.03	527064.62
117	2033003.03	527265.95
118	2033003.03	527273.31
119	2033003.03	527540.07
120	2032943.32	527540.15
121	2033736.97	526685.55
122	2033560.10	526703.53
123	2033517.99	526722.05
124	2033536.25	526783.02
125	2033440.04	526935.43
126	2033340.70	526927.79
127	2033434.12	526955.81
128	2033431.86	527131.05
129	2033417.20	527179.95
130	2033422.77	527190.30
131	2033393.08	527119.42
132	2033338.99	527228.53
133	2033384.96	527259.99
134	2033429.70	527194.62
135	2033537.04	527261.51
136	2033550.05	527269.62
137	2033674.44	527347.14
138	2033648.01	527404.22
139	2033847.26	527239.58
140	2033834.10	527286.28
141	2034146.46	527425.00
142	2034165.06	527426.60
143	2034195.23	527455.22
144	2034236.73	527480.94
145	2034131.42	527449.28
146	2034123.48	527451.15
147	2034437.15	527605.14
148	2034463.90	527697.25
149	2034312.10	527762.23
150	2034306.17	527771.60
151	2034286.01	527803.52
152	2034319.82	527824.47
153	2034008.48	527857.14
154	2033907.85	527794.42
155	2033964.01	527928.51
156	2033573.81	527806.00
157	2033552.22	527713.02
158	2033564.35	527707.03
	DRAWING	C-21
201	2033540.47	528506.65
202	2033737.45	528614.29
203	2033784.62	528577.51
204	2033899.89	528317.05
205	2033819.52	528268.22
206	2033710.65	528254.61
207	2033541.05	528470.72
208	2033516.46	528102.61
209	2033729.95	528219.28
210	2033889.14	528274.57
211	2033901.95	528313.27
212	2033861.61	527985.36
213	2033909.85	528015.42
214	2034138.38	528037.18
215	2034293.81	528058.00
216	2034266.13	528242.24
217	2034173.32	527981.87
218	2034344.72	528066.46
219	2034359.80	528068.97
220	2034365.97	528069.99
221	2034162.74	527975.12
222	2034361.69	528053.65
223	2034374.56	528018.25

XX LAYOUT DATA

ITEM	NORTHERN	EASTERN
224	2034398.21	528001.34
225	2034497.03	527960.50
226	2034372.35	528071.05
227	2034490.78	528061.18
228	2034670.84	528227.53
229	2034696.53	528217.17
230	2034704.30	528221.24
231	2034636.05	528241.54
232	2034476.49	528273.28
233	2034438.05	528234.10
234	2034416.91	528181.64
235	2034385.37	528103.35
236	2034429.65	528213.23
237	2034469.24	528265.89
238	2034405.42	528307.02
239	2034467.65	528281.95
240	2034479.55	528315.04
241	2034560.71	528271.90
242	2034517.21	528314.57
243	2034522.22	528319.90
244	2034539.98	528368.86
245	2034738.10	528320.33
246	2034529.92	528387.49
247	2034494.10	528453.79
248	2034442.00	528425.65
249	2034232.07	528595.28
250	2034415.50	528598.82
251	2034152.12	528764.31
252	2034289.27	528848.50
253	2034492.60	528640.95
254	2034571.57	528693.53
255	2034706.63	528801.56
256	2034685.57	528784.71
257	2034724.26	528815.66
258	2034722.08	528808.91
259	2034815.90	528899.94
260	2034886.39	528956.89
261	2034844.29	528991.39
262	2034847.88	528999.81
263	2035028.64	528782.17
264	2035110.93	528749.23
265	2034728.69	529395.43
266	2034742.82	529389.59
267	2034770.20	529378.26
268	2034857.18	529342.30
269	2034787.22	529419.34
270	2034948.58	529359.15
271	2034973.36	529294.25
272	2035011.07	529382.72
273	2035017.91	529398.79
274	2035078.48	529540.91
275	2035253.31	529569.13
276	2035042.87	529605.18
277	2035097.90	529586.46
278	2035115.53	529627.84
279	2035128.01	529657.12
280	2035151.04	529711.17
281	2035156.25	529723.39
282	2035132.86	529668.51
283	2035185.74	529762.01
284	2034848.82	529888.33
285	2034657.85	529969.72
286	2035340.57	530081.84
287	2035326.41	530081.17
288	2035313.85	530093.18
289	2035255.83	530117.84
290	2035237.90	530125.45
291	2035096.36	530185.57
292	2035035.69	530211.34
293	2035037.65	530215.94
294	2035048.43	530241.31
295	2035134.50	530443.92
296	2035204.03	530529.58
297	2035159.43	530433.51
298	2035197.15	530417.30
299	2035331.19	530360.36
300	2035368.18	530344.65
301	2035422.64	530307.90
302	2035439.19	530314.49
303	2035039.70	530484.18
304	2035018.31	530718.54
305	2035019.39	530775.31
306	2034961.71	530697.64

XX LAYOUT DATA

ITEM	NORTHERN	EASTERN
307	2034943.46	530747.57
308	2034953.92	530884.35
309	2034905.54	530851.36
310	2034947.92	530942.54
	DRAWING	C-22
401	2034617.43	527319.84
402	2034592.79	527148.19
403	2034588.58	526913.71
404	2034600.88	526655.56
405	2034579.46	526655.52
406	2034558.44	532437.99
407	2034558.22	532122.30
408	2034764.56	532153.46
409	2034782.50	532241.07
410	2034741.96	532302.69

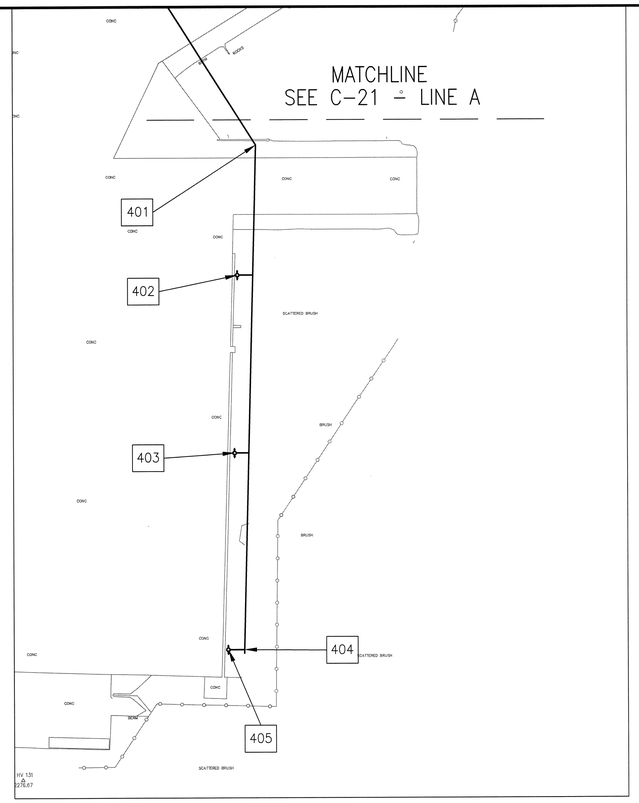

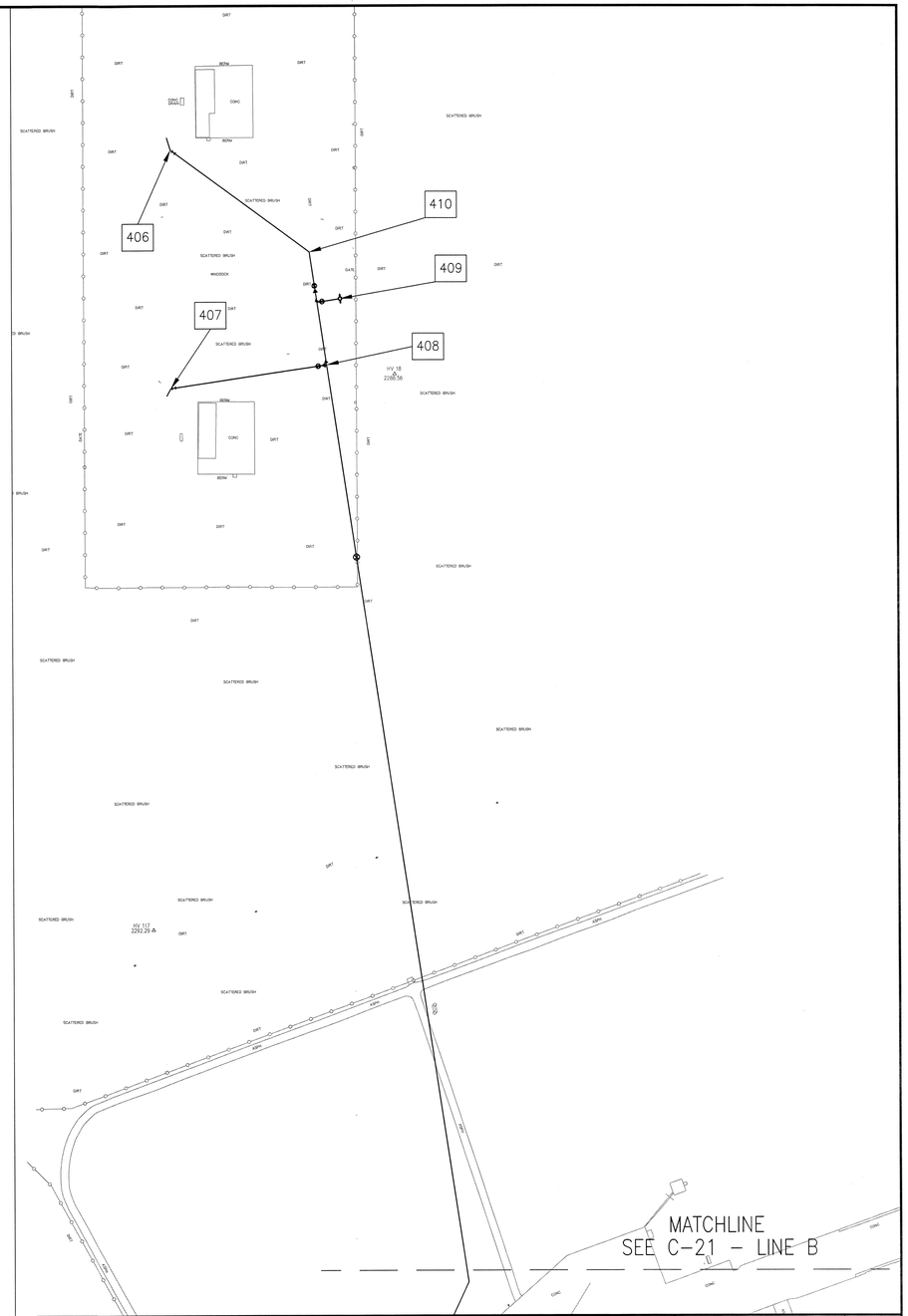

GRAPHIC SCALE: 1" = 100'

100' 0 100' 200' 300'

TRUE NORTH

REGISTERED PROFESSIONAL ENGINEER
JONATHAN F. BERKSHIRE
NO. 60229
EXP. 6/30/12
CIVIL
STATE OF CALIFORNIA

JBY #0622-15

JB YOUNG & ASSOCIATES
CONSULTANT ENGINEERS
11440 RIVERSIDE DRIVE, SUITE M
LAKESIDE, CA 92040
619-448-9424
619-448-4690 (FAX)

DATE	SUB	DESCRIPTION	BY	A'PD
07/22/11	C	100% FINAL DESIGN		
06/30/11	B	95% NEAR-FINAL DESIGN		
01/31/11	A	30% PRELIMINARY DESIGN		

NATIONAL AERONAUTICS AND SPACE ADMINISTRATION
DRYDEN FLIGHT RESEARCH CENTER
EDWARDS, CA

DRAWING TITLE

HORIZONTAL PIPE LAYOUT

PROJECT TITLE

REPAIR CENTER-WIDE FIRE MAINS
DESIGN SUBMITTAL "C"

APPROVALS	DATE
Chief, Facilities Engineering & Asset Mgmt. Office	2-1-12
Project Requestor/Customer	2-1-12
Facilities Project Manager	1-31-12
Chief, Office of Protective Services	02/01/12
Chief - Safety, Health and Environmental Office	2-1-12
DFRC Chief Information Officer	1 Feb 12

DATE STRTD	7/23/10	DATE PRNTD	7/22/11
DRAWN BY	JFB		EDM-1697
SCALE	AS NOTED	TRADE SH. No.	C-22
FILE NAME		SHEET No.	29 of 37

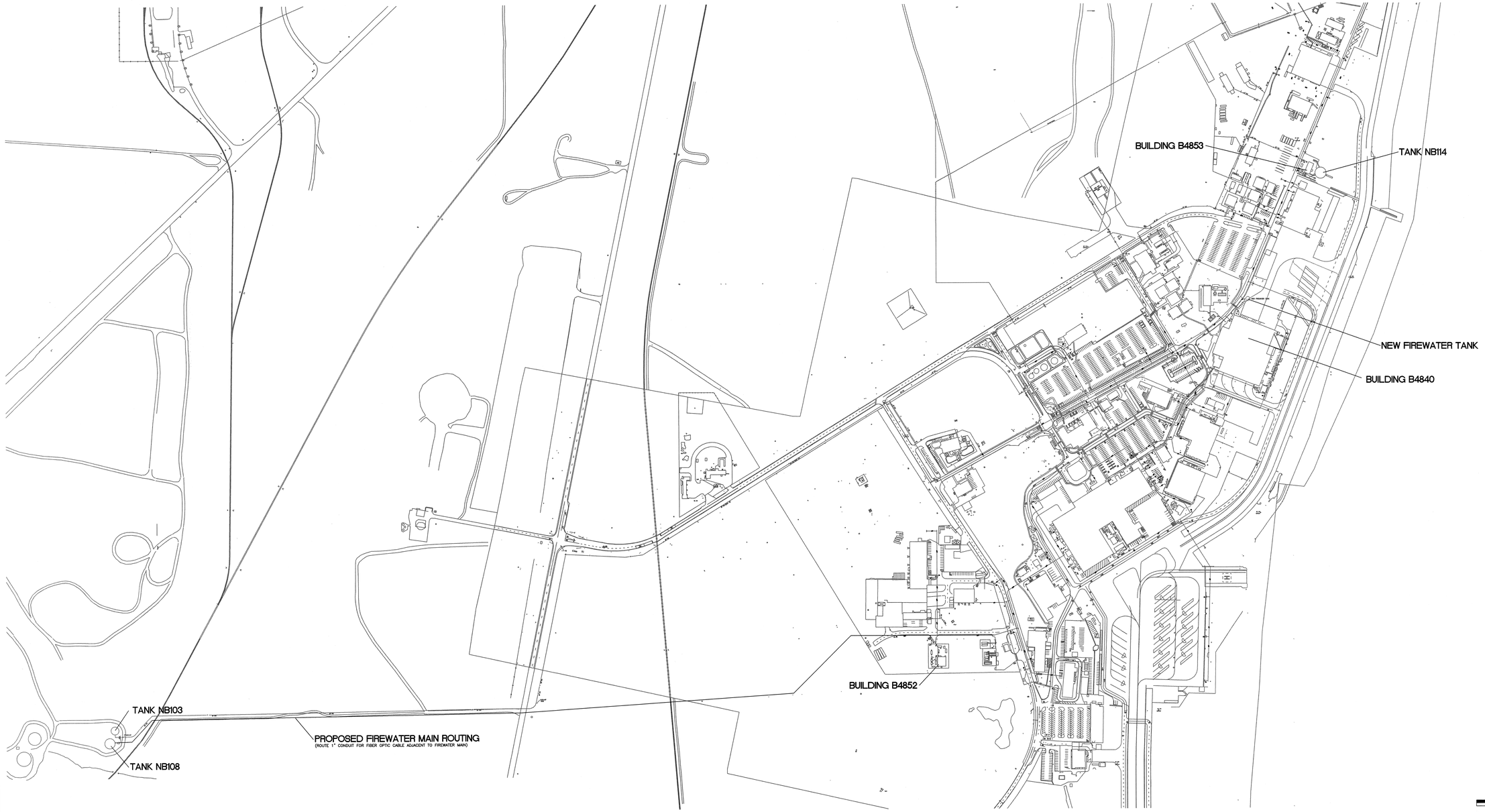

FIRE ALARM SYSTEM NOTES:

1. FIRE ALARM SYSTEMS SHALL BE DESIGNED AND INSTALLED IN ACCORDANCE WITH NFPA 72, 2010 EDITION, NFPA 101 2009 EDITION. UFGS DIVISION 28, SECTIONS 31 64.00 10 AND NASA-STD-8719.11 REVISION A.
2. ALL DEVICES AND EQUIPMENT SHALL BE UL LISTED OR FM APPROVED.
3. DEVICES ARE SHOWN IN SUGGESTED LOCATIONS. FINAL QUANTITY AND LAYOUT SHALL BE IN ACCORDANCE WITH APPLICABLE CODES, MANUFACTURER'S RECOMMENDATIONS AND EQUIPMENT LISTINGS.
4. ALL FIRE ALARM CONDUCTORS SHALL BE RUN IN 21 MM (3/4") MINIMUM CONDUITS, UNLESS OTHERWISE NOTED.
5. SIGNALING LINE CIRCUITS SHALL BE CLASS B, STYLE 4; INITIATING DEVICE CIRCUITS SHALL BE CLASS B, STYLE B.
6. ALL FIRE ALARM CONDUIT SHALL BE PAINTED RED.

SYMBOL LEGEND

TS	TAMPER SWITCH	F	MANUAL PULL STATION
WS	WATER FLOW SWITCH	LD	LEAK DETECTOR
LS[H]	LEVEL SWITCH, HIGH	☐*	*N= NEW, E = EXISTING M= MONITORED BY EXISTING FACP R= REPLACE
LS[L]	LEVEL SWITCH, LOW		
CP	CATHODIC PROTECTION		

SCALE: 1" = 300'-0" | 1

REGISTERED PROFESSIONAL ENGINEER — RONALD J. MUDRY — License No. FP1504 Expires 5-30-13 — FIRE PROTECTION — STATE OF CALIFORNIA

MUDRY & ASSOCIATES
Fire Protection Engineering, Consulting and Design
12752 Valley View Street, Suite D
Garden Grove, California 92845
(714) 373-5741
Fax (714) 373-5781
e-mail: fpe@mudry.us

DATE	SUB	DESCRIPTION	BY	A'PD
07/22/11	C	100% FINAL DESIGN		
06/30/11	B	95% NEAR-FINAL DESIGN		
01/31/11	A	30% PRELIMINARY DESIGN		

NATIONAL AERONAUTICS AND SPACE ADMINISTRATION
DRYDEN FLIGHT RESEARCH CENTER
EDWARDS, CA

DRAWING TITLE
FIRE ALARM PLAN

PROJECT TITLE
REPAIR CENTER-WIDE FIRE MAINS
DESIGN SUBMITTAL "C"

APPROVALS	DATE
Chief, Facilities Engineering & Asset Mgmt. Office	2-1-12
Project Requestor/Customer	2-1-12
Facilities Project Manager	1-31-12
Chief, Office of Protective Services	02/01/12
Chief - Safety, Health and Environmental Office	2-1-12
DFRC Chief Information Officer	1 Feb 12

DATE STRTD	07/23/10	DATE PRNTD	07/22/11
DRAWN BY	RJM		EDM-1697
SCALE	AS NOTED	TRADE SH. No.	FA-1
FILE NAME		SHEET No.	30 of 37

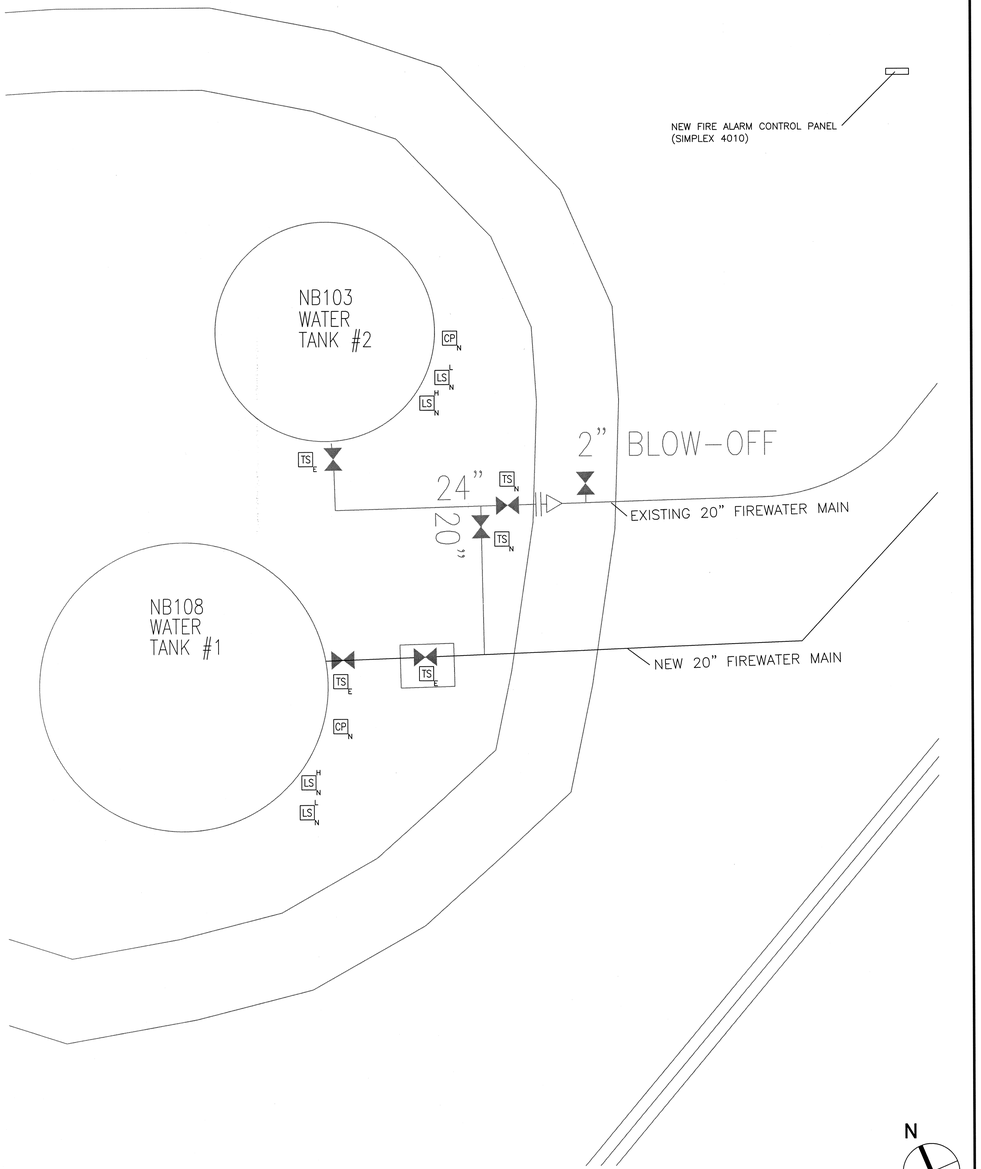

TANKS NB103 & NB108 | SCALE: 1/16" = 1'-0" | 2

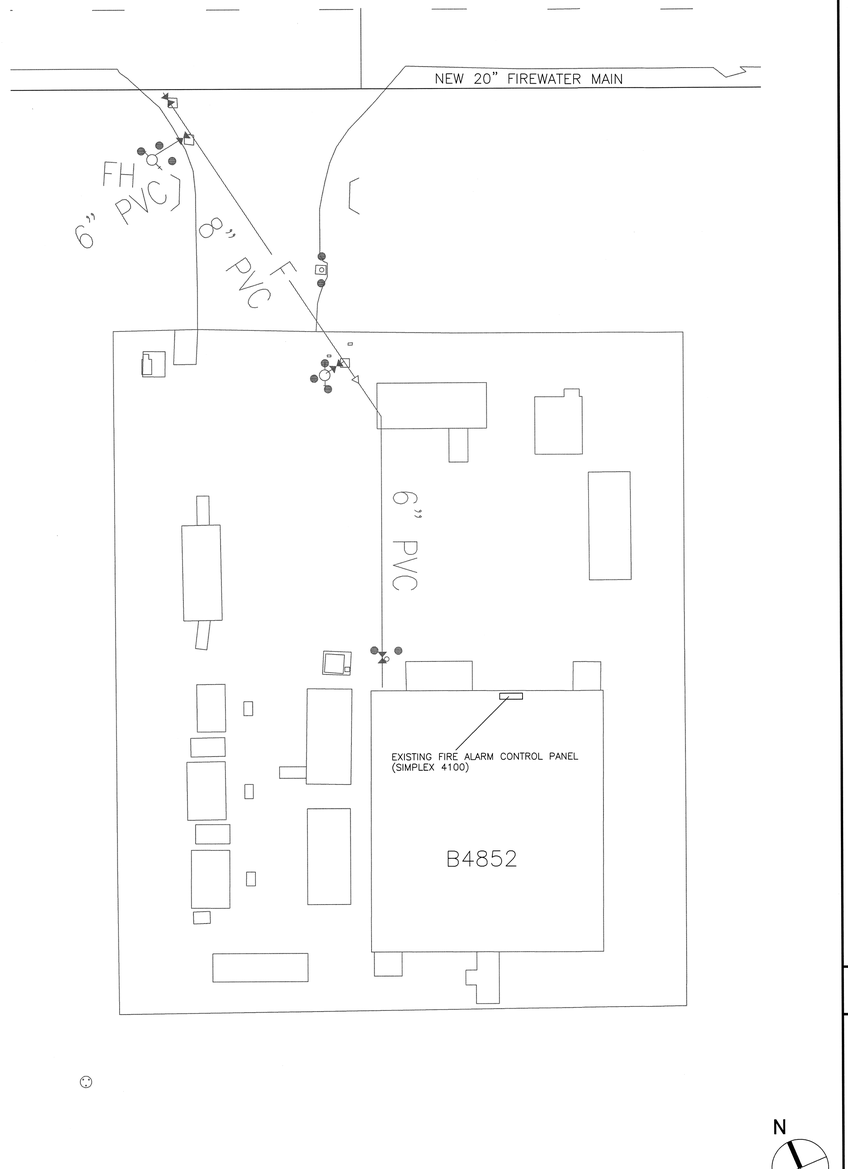

BUILDING B4852 | SCALE: 1/16" = 1'-0" | 1

TANK NB103
(300,000 Gal. FIREWATER STORAGE TANK)
(FACP in B4852)

Level Switches

Water Level Switch 80%	(NEW)
Water Level Switch 20 %	(NEW)

Tamper Switches

20" Valve, Tank Outlet	(E)
20" PIV, Tank Outlet	(E)

Miscellaneous

Cathodic Protection	(E)

Fire Alarm Control Panel

Fire Alarm Control Panel	(N) Simplex 4010

TANK NB108
(500,000 Gal. FIREWATER STORAGE TANK)
(FACP in B4852)

Level Switches

Water Level Switch 80%	(NEW)
Water Level Switch 20 %	(NEW)

Tamper Switches

20" Valve, Tank Outlet	(E)
20" PIV, Tank Outlet	(NEW)
20" PIV, Bypass Line	(NEW)

Miscellaneous

Cathodic Protection	(E)

Fire Alarm Control Panel

Fire Alarm Control Panel	(E) to be upgraded for IAMs

SYMBOL LEGEND

TS	TAMPER SWITCH	F	MANUAL PULL STATION
WS	WATER FLOW SWITCH	LD	LEAK DETECTOR
LS H	LEVEL SWITCH, HIGH	□	N= NEW, E = EXISTING M= MONITORED BY EXISTING FACP R= REPLACE
LS L	LEVEL SWITCH, LOW		
CP	CATHODIC PROTECTION		

FIRE ALARM SYSTEM NOTES:

1. FURNISH INDIVIDUAL ADDRESSABLE MODULES FOR EACH EXISTING AND NEW MONITORED POINT, I.E. TAMPER SWITCHES, LEVEL SWITCHES, CATHODIC PROTECTION SYSTEM AND MANUAL PULL STATIONS.
2. ALL DEVICES SHALL BE MONITORED BY NEW FIRE ALARM CONTROL PANEL, SIMPLEX 4010, LOCATED ADJACENT TO FIRE WATER STORAGE TANKS AND CONNECTED TO THE FIRE ALARM CONTROL PANEL IN BUILDING B4852.
3. UPGRADE THE EXISTING SIMPLEX 4100 FIRE ALARM CONTROL PANEL LOCATED IN BUILDING 4852 AS REQUIRED.
4. PROVIDE 1" CONDUIT FOR FIBER OPTIC CABLE BETWEEN SIMPLEX 4010 FACP LOCATED AT FIRE WATER STORAGE TANKS AND SIMPLEX 4100 FACP LOCATED IN BUILDING B4852. PROVIDE PULLBOXES LOCATED ALONG CONDUIT RUN SPACED CONDUIT RUN SPACED AT A MAXIMUM OF 300' BETWEEN BOXES. PULLBOX AND CONDUIT BEND RADIUS SHALL BE SIZED FOR THE INSTALLATION OF FIBER OPTIC CABLE.

REGISTERED PROFESSIONAL ENGINEER
RONALD J. MUDRY
License No. FP1504
Expires 6-30-13
FIRE PROTECTION
STATE OF CALIFORNIA

MUDRY & ASSOCIATES
Fire Protection Engineering, Consulting and Design
12752 Valley View Street, Suite D
Garden Grove, California 92845
(714) 373-5741
Fax (714) 373-5781 e-mail: fpe@mudry.us

DATE	SUB	DESCRIPTION	BY	A'PD
07/22/11	C	100% FINAL DESIGN		
06/30/11	B	95% NEAR-FINAL DESIGN		
01/31/11	A	30% PRELIMINARY DESIGN		

NATIONAL AERONAUTICS AND SPACE ADMINISTRATION
DRYDEN FLIGHT RESEARCH CENTER
EDWARDS, CA

DRAWING TITLE
BUILDING B4852, TANKS NB103 & NB108

PROJECT TITLE
REPAIR CENTER-WIDE FIRE MAINS
DESIGN SUBMITTAL "C"

APPROVALS	DATE
Chief, Facilities Engineering & Asset Mgmt. Office	2-1-12
Project Requestor/Customer	2-1-12
Facilities Project Manager	1-31-12
Chief, Office of Protective Services	02/01/12
Chief - Safety, Health and Environmental Office	2-1-12
DFRC Chief Information Officer	1 Feb 12

DATE STRTD	07/23/10	DATE PRNTD	07/22/11
DRAWN BY	RJM		EDM-1697
SCALE	AS NOTED	TRADE SH. No.	FA-2
FILE NAME		SHEET No.	31 of 37

SCALE: 1/16" = 1'-0" | 1

ITEMS - BUILDING B4853

Tamper Switches

Fire Pump #1 Suction Valve	(E)
Fire Pump #1 Discharge Valve	(E)
Fire Pump #2 Suction Valve	(E)
Fire Pump #2 Discharge Valve	(E)
Jockey Pump Suction Valve	(E)
Jockey Pump Discharge Valve	(E)
18" Butterfly valve from PRV	(E)

Level Switches

Fire Pump #1 Fuel Day Tank Low Level Switch	(E)
Fire Pump #2 Fuel Day Tank Low Level Switch	(E)
Fire Pump #1 Fuel Day Tank Spill Detection Switch	(E)
Fire Pump #2 Fuel Day Tank Spill Detection Switch	(E)
2000 Gal. Main Fuel Tank Low Level Switch	(NEW)

Control Panels

Fire Pump #1 Control Panel	(E)
Fire Pump #2 Control Panel	(E)
Fire Alarm Control Panel	(E) to be upgraded for IAMs

Manual Pull Stations

Manual Pull Station East door	(Replace)
Manual Pull Station West door	(Replace)

TANK NB114
(600,000 Gal. FIREWATER STORAGE TANK)
(FACP in B4853)

Level Switches

Water Level Switch 80%	(NEW)
Water Level Switch 20%	(NEW)

Tamper Switches

18" PIV, Isolation Valve	(NEW)
18" PIV, Isolation Valve	(NEW)
18" PIV, Fire Pump Test	(NEW)
6" PIV, Fire Service	(NEW)
6" PIV, Tank fill Line	(NEW)
4" PIV, Potable Water	(NEW)
6" Gate Valve @ Auto Fill Valve	(E)
6" Gate Valve @ Auto Fill Valve	(E)
4" Gate Valve @ Potable Water Backflow Preventer	(NEW)
4" Gate Valve @ Potable Water Backflow Preventer	(NEW)
6" Gate Valve @ Bypass	(E)
6" Gate Valve @ Bypass	(E)
30"Valve, Tank Outlet	(NEW)

Miscellaneous

Cathodic Protection	(NEW)

SYMBOL LEGEND

TS TAMPER SWITCH	F MANUAL PULL STATION
WS WATER FLOW SWITCH	LD LEAK DETECTOR
LS^H LEVEL SWITCH, HIGH	□ N= NEW, E = EXISTING M= MONITORED BY EXISTING FACP R= REPLACE
LS^L LEVEL SWITCH, LOW	
CP CATHODIC PROTECTION	

FIRE ALARM SYSTEM NOTES:

1. FURNISH INDIVIDUAL ADDRESSABLE MODULES FOR EACH EXISTING AND NEW MONITORED POINT, I.E. TAMPER SWITCHES, LEVEL SWITCHES, LEAK DETECTORS, CATHODIC PROTECTION SYSTEM AND MANUAL PULL STATIONS.
2. EXISTING MANUAL PULL STATIONS SHALL BE REPLACED WITH NEW ADDRESSABLE DOUBLE ACTION MANUAL PULL STATION.
3. REMOVE EXISTING FIRE ALARM PANEL AS INDICATED.
4. UPGRADE REMAINING SIMPLEX 4100 FIRE ALARM CONTROL PANEL AS REQUIRED.

REGISTERED PROFESSIONAL ENGINEER
DONALD J. MUDRY
License No. FP1504
Expires 6-30-13
FIRE PROTECTION
STATE OF CALIFORNIA

MUDRY & ASSOCIATES
Fire Protection Engineering, Consulting and Design
12752 Valley View Street, Suite D
Garden Grove, California 92845
(714) 373-5741
Fax (714) 373-5781
e-mail: fpe@mudry.us

DATE	SUB	DESCRIPTION	BY	A'PD
05/10/12		NASA EDITS – DELTA 1 (1)	TSS	TSS
07/22/11	C	100% FINAL DESIGN		
06/30/11	B	95% NEAR-FINAL DESIGN		
01/31/11	A	30% PRELIMINARY DESIGN		

NATIONAL AERONAUTICS AND SPACE ADMINISTRATION
DRYDEN FLIGHT RESEARCH CENTER
EDWARDS, CA

DRAWING TITLE
BUILDING B4853 & TANK NB114

PROJECT TITLE
REPAIR CENTER-WIDE FIRE MAINS
DESIGN SUBMITTAL "C"

APPROVALS	DATE
Chief, Facilities Engineering & Asset Mgmt. Office	5-10-12
Project Requestor/Customer	5-10-12
Facilities Project Manager	5-10-12
Chief, Office of Protective Services	5-10-12
Chief – Safety, Health and Environmental Office	5-10-12
DFRC Chief Information Officer	10 May 12

DATE STRTD	07/22/10	DATE PRNTD	07/22/11
DRAWN BY	RJM	EDM-1697	
SCALE	AS NOTED	TRADE SH. No. FA-3	SHEET No. 32 of 37
FILE NAME			

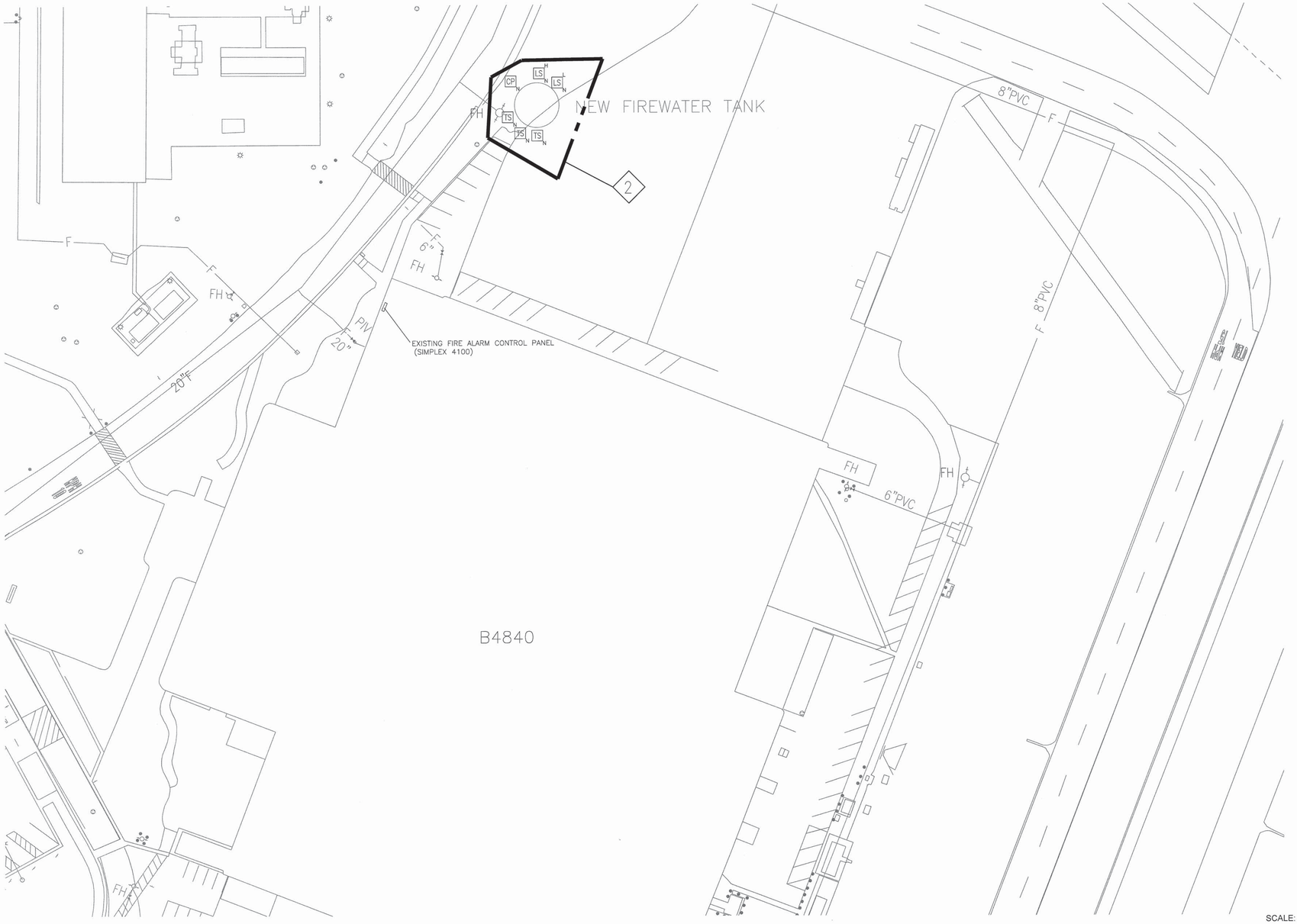

BUILDING B4840 AND NEW FIREWATER TANK

SCALE: 1/32" = 1'-0"

1

FIRE ALARM SYSTEM NOTES:

1. FURNISH INDIVIDUAL ADDRESSABLE MODULES FOR EACH NEW MONITORED POINT, I.E. TAMPER SWITCHES, LEVEL SWITCHES, AND CATHODIC PROTECTION SYSTEM.
2. UPGRADE EXISTING SIMPLEX 4100 FIRE ALARM CONTROL PANEL LOCATED IN BUILDING B4820.

REGISTERED PROFESSIONAL ENGINEER
RONALD J. MUDRY
License No. FP1504
Expires 6-30-12
FIRE PROTECTION
STATE OF CALIFORNIA

MUDRY & ASSOCIATES
Fire Protection Engineering, Consulting and Design
12752 Valley View Street, Suite D
Garden Grove, California 92845
(714) 373-5741
Fax (714) 373-5781 e-mail: fpe@mudry.us

DATE	SUB	DESCRIPTION	BY	A'PD
07/22/11	C	100% FINAL DESIGN		
06/30/11	B	95% NEAR-FINAL DESIGN		
01/31/11	A	30% PRELIMINARY DESIGN		

NEW FIREWATER TANK
(FIREPUMP TEST TANK)
(FACP in B4840)

Level Switches

Water Level Switch 80%	(NEW)
Water Level Switch 20 %	(NEW)

Tamper Switches

6" Valve, Tank Fill Line	(NEW)
20" Valve, Pump Suction	(NEW)
12" Valve, Recirculation Line	(NEW)

Miscellaneous

Cathodic Protection	(NEW)

Fire Alarm Control Panel

Fire Alarm Control Panel	(E) to be upgraded for IAMs

SYMBOL LEGEND

TS	TAMPER SWITCH	F	MANUAL PULL STATION
WS	WATER FLOW SWITCH	LD	LEAK DETECTOR
LS[H]	LEVEL SWITCH, HIGH	□	N= NEW, E = EXISTING M= MONITORED BY EXISTING FACP R= REPLACE
LS[L]	LEVEL SWITCH, LOW		
CP	CATHODIC PROTECTION		

NATIONAL AERONAUTICS AND SPACE ADMINISTRATION
DRYDEN FLIGHT RESEARCH CENTER
EDWARDS, CA

DRAWING TITLE
BUILDING B4840 & NEW FIREWATER TANK

PROJECT TITLE
REPAIR CENTER-WIDE FIRE MAINS
DESIGN SUBMITTAL "C"

APPROVALS	DATE
Chief, Facilities Engineering & Asset Mgmt Office	5-10-12
Project Requestor/Customer	5-10-12
Facilities Project Manager	5-9-12
Chief, Office of Protective Services	
Chief – Safety, Health and Environmental Office	5-10-12
DFRC Chief Information Officer	10 May 12

DATE STRTD	07/23/10	DATE PRNTD	07/22/11
DRAWN BY	RJM		EDM-1697
SCALE	AS NOTED	TRADE SH. No.	FA-4
FILE NAME			SHEET No. 33 of 37

Simplex — Multi-Application Peripherals

*UL, ULC, CSFM Listed; FM Approved; MEA (NYC) Acceptance**

IDNet™ and MAPNET II® Communicating Devices, Individual Addressable Modules (IAMs)

Features

IDNet or MAPNET II addressable communications supply both data and power over a single wire pair to provide:**

- Supervised Class B monitoring of normally open, dry contacts
- Total wiring distance from IAM to supervision resistor(s) of up to 500 ft (152 m)
- Monitored connection is compatible with Simplex® 2081-9044 Overvoltage Protectors for outdoor wiring or electrically noisy applications

For use with following Simplex control panels:

- Model Series 4008, 4010, and 4100U fire alarm control panels for IDNet communications
- Model Series 4100/4100U, 4120, 4020, and 2120 Communicating Device Transponders (CDTs) equipped with MAPNET II communications

Model 4090-9001:

- Enclosed design minimizes dust infiltration
- Mounts in standard single gang electrical box
- Screw terminals for wiring connections
- Visible LED flashes to indicate communications
- Optional covers are available to allow LED to be viewed after installation (requires mounting bracket, ordered separately)

Model 4090-9051:

- Encapsulated design for extended exposure to high humidity (LED is not present on this model)
- Color coded 18 AWG leads for wiring

IDNet communications provides current limited monitoring:

- Provides monitoring of tamper switch (supervisory) and waterflow switch (alarm) on same circuit using one point
- Available with IDNet communications only

Multiple operation modes are available and are selectable at the control panel:

- Contact closure status can be tracked
- Momentary contact closure conditions can be selected at the panel to be latched or tracked (not available with the 2120 CDT)

UL listed to Standard 864

4090-9001 Supervised IAM (shown approximately 3/4 size)

4090-9051 Supervised IAM (shown approximately 3/4 size)

Description

Individual addressable modules (IAMs) receive both power and communications from a two-wire MAPNET II or IDNet circuit. They provide location specific addressability to a single initiating device (such as single station smoke detector alarm contacts or heat detector contacts) or multiple devices at the same location by monitoring normally open dry contacts and the wiring to an end-of-line resistor.

Model 4090-9001 is packaged in a thermoplastic housing and provides screw terminal connections and a status indicating LED.

Model 4090-9051 is an encapsulated package with wire leads. It does not provide a status indicating LED.

* These products have been approved by the California State Fire Marshal (CSFM) pursuant to Section 13144.1 of the California Health and Safety Code. See CSFM Listing 7300-0026:223 for allowable values and/or conditions concerning material presented in this document. It is subject to re-examination, revision, and possible cancellation. Accepted for use – City of New York Department of Buildings – MEA35-93E. Additional listings may be applicable; contact your local Simplex product supplier for the latest status. Listings and approvals under Simplex Time Recorder Co. are the property of Tyco Safety Products Westminster.

** IDNet and MAPNET II addressable communications are protected under U.S. Patent Nos. 4,796,025; 5,966,002; and 6,034,601.

S4090-0001-8 2/2006

Operation

Contact Closure. Closure of the monitored contact(s) initiates an alarm or other response as programmed at the fire alarm control panel. An open in the monitored circuit wiring will cause a trouble to be reported.

Panel Selections. Selections can be made at the control panel to maintain the alarm condition if the initiating device contacts are momentary, such as from a rate-of-rise heat detector, or to track the device contact status (not available with the 2120 CDT).

Current Limited Operation Applications

For use with IDNet communications only, these IAMs can provide quad-state sensing of normal, open circuit, short circuit, and current limited conditions. (Program type is "T-sense.") With the proper end-of-line and current limiting resistors, dual functions such as tamper switch and waterflow switch monitoring can be determined and communicated by a single addressable point.

IAM Product Selection

Model	Description
→ 4090-9001	Supervised IAM, mounted in thermoplastic housing with screw terminals; see applicable options below
4090-9051	Supervised IAM, encapsulated with wire leads

Optional Trim Plates and Mounting Bracket for Model 4090-9001

Model	Description
4090-9806	For semi-flush mounted box — Trim plate with LED viewing window, requires 4090-9810 mounting bracket, includes mounting screws; galvanized steel
4090-9807	For surface mounted box — Trim plate with LED viewing window, requires 4090-9810 mounting bracket, includes mounting screws; galvanized steel
4090-9810	Mounting bracket, mounts IAM to electrical box and provides screw holes for trim plate, **required for optional trim plates**

End-of-Line Resistor Harnesses (ordered separately as required)

Model	Reference No.	Description
4081-9004	733-886	6.8 kΩ, 1/2 W; Standard end-of-line resistor harness for N.O. contact supervision
4081-9003	733-896	4.7 kΩ, 1/2 W — Use for current limited monitoring applications
4081-9005	733-984	1.8 kΩ, 1/2 W — Use for current limited monitoring applications

Specifications

Electrical		
Power and Communications		MAPNET II or IDNet, auto selected, 1 address per IAM
Input Requirements		Normally open, dry contacts
Wire Connections	4090-9001	Screw terminals for in/out wiring, 18 to 14 AWG wire (0.82 mm² to 2.08 mm²)
	4090-9051	Color coded wire leads, 18 AWG (0.82 mm²), 8" long (203 mm)
Reference Documents	Installation Instructions	574-331 for 4090-9001; 579-572 for 4090-9151
	Field Wiring Diagrams	842-073 for IDNet operation; 841-804 for MAPNET II operation
Wiring Distances		
Distance from IAM to Contacts		500 ft (152 m) maximum without protectors
		400 ft (122 m) maximum with 2081-9044 Overvoltage Protectors
Wiring Distance Reference per channel, MAPNET II or IDNet Communications		2500 ft (762 m) maximum from fire alarm control panel
		10,000 ft (3048 m) maximum total wiring distance (including T-Taps)
Mechanical		
Dimensions	4090-9001	1-9/16" W x 1-3/4" H x 1-1/4" D (40 mm x 44 mm x 32 mm)
	4090-9051	1-9/16" W x 1-9/16" H x 9/16" D (40 mm x 40 mm x 14 mm)
Housing Material, 4090-9001		Black thermoplastic
Encapsulation Material, 4090-9051		Epoxy, beige
Temperature Range		32° to 120° F (0° to 49° C) intended for indoor operation
Humidity Range		Up to 93% RH at 100° F (38° C)

2 S4090-0001-8 2/2006

Mounting Information

Mounting Reference, Single Gang Blank Cover Plate

NOTE: These mounting plates require mounting bracket 4090-9810.

Optional Trim Plates and Mounting Bracket for Visible LED

3 S4090-0001-8 2/2006

INDIVIDUAL ADDRESSABLE MODULE — SCALE: NONE — 1

Simplex — Multi-Application Peripherals

*UL, ULC, CSFM Listed; FM Approved; MEA (NYC) Acceptance**

IDNet™ or MAPNET II® Communicating Devices, Addressable Manual Stations

Features

Individually addressable manual fire alarm stations with:

- Power and data supplied via IDNet or MAPNET II addressable communications using a single wire pair**
- Operation that complies with ADA requirements
- Pull lever that protrudes when alarmed
- Break-rod supplied (use is optional)
- Models are available with single or double action (breakglass or push) operation
- UL listed to Standard 38

Compatible with the following Simplex® control panels:

- Model Series 4008, 4010, 4100U, 4020, 4100, and 4120 fire alarm control panels equipped with either IDNet or MAPNET II communications
- Model Series 2120 Communicating Device Transponders (CDTs) equipped with MAPNET II communications

Compact construction:

- Electronics module enclosure minimizes dust infiltration
- Allows mounting in standard electrical boxes
- Screw terminals for wiring connections

Tamper resistant reset key lock (keyed same as Simplex fire alarm cabinets)

Multiple mounting options:

- Surface or semi-flush with standard boxes or matching Simplex boxes
- Flush mount adapter kit
- Adapters are available for retrofitting to commonly available existing boxes

Description

The Simplex model 4099-9001 addressable station combines the familiar Simplex manual station housing with a compact communication module that is easily installed to satisfy demanding applications. Its integral individual addressable module (IAM) constantly monitors status and communicates changes to the connected control panel via IDNet or MAPNET II communications wiring.

* Refer to page 2 for specific model listings. This product has been approved by the California State Fire Marshal (CSFM) pursuant to Section 13144.1 of the California Health and Safety Code. See CSFM Listing 7150-0026:224 for allowable values and/or conditions concerning material presented in this document. It is subject to re-examination, revision, and possible cancellation. Accepted for use – City of New York Department of Buildings – MEA35-93E. Additional listings may be applicable; contact your local Simplex product supplier for the latest status. Listings and approvals under Simplex Time Recorder Co. are the property of Tyco Safety Products Westminster.

4099-9001 Addressable Manual Station (front and side view)

4099-9002 Breakglass — 4099-9003 Push — With 2099-9828 Institutional Cover kit

Operation

Activation of the Simplex 4099-9001 single manual station requires a firm downward pull to activate the alarm switch. Completing the action breaks an internal plastic break-rod (visible below the pull lever, use is optional). The use of a break-rod can be a deterrent to vandalism without interfering with the minimum pull requirements needed for easy activation. The pull lever latches into the alarm position and remains extended out of the housing to provide a visible indication.

Double Action Stations (Breakglass) require the operator to strike the front mounted hammer to break the glass and expose the recessed pull lever. The pull lever then operates as a single action station.

Double Action Stations (Push Type) require that a spring loaded interference plate (marked PUSH) be pushed back to access the pull lever of the single action station.

Station reset requires the use of a key to reset the manual station lever and deactivate the alarm switch. (If the break-rod is used, it must be replaced.)

Station testing is performed by physical activation of the pull lever. Electrical testing can be also performed by unlocking the station housing to activate the alarm switch.

** IDNet and MAPNET II addressable communications designs are protected by U.S. Patent No. 4,796,025, 5,966,002, and 6,034,601.

S4099-0001-7 5/2006

Addressable Manual Station Product Selection

Addressable Manual Stations, Red Housing with White Letters and White Pull Lever

Model	Description	Housing	Pull Lever	Listings
4099-9001	Single action, English	FIRE ALARM	PULL DOWN	UL, ULC, FM, CSFM, MEA
4099-9001CB	Single action, Bilingual English and French	FEU FIRE	TIREZ PULL	ULC, FM
4099-9001CF	Single action, French	ALARME FEU	ABAISSEZ	ULC, FM
4099-9002	Double action, Breakglass operation, English	FIRE ALARM	PULL DOWN	UL, ULC, FM, CSFM, MEA
4099-9003	Double action, Push operation, English	FIRE ALARM	PULL DOWN	UL, ULC, FM, CSFM, MEA

Accessories

Model	Description	
2975-9178	Surface mount steel box, red	Refer to page 3 for dimensions
2975-9022	Cast aluminum surface mount box, red	Refer to page 3 for dimensions
2099-9813	Semi-flush trim plate for double gang switch box, red	Typically for retrofit, refer to page 4
2099-9814	Surface trim plate for Wiremold box V5744-2, red	Typically for retrofit, refer to page 4
2099-9819	Flush mount adapter kit, black	Refer to page 4 for details
2099-9820	Flush mount adapter kit, beige	Refer to page 4 for details
2099-9803	Replacement breakglass	
2099-9804	Replacement break-rod	
2099-9828	Institutional cover kit for field installation on 4099-9001	

Specifications

Power and Communications	IDNet or MAPNET II communications, 1 address per station
Address Means	Dipswitch, 8 position
Wire Connections	Screw terminal for in/out wiring, for 18 to 14 AWG wire
UL Listed Temperature Range	32° to 120° F (0° to 49° C) intended for indoor operation
Humidity Range	Up to 93% RH at 100° F (38° F)
Housing Color	Red with white raised lettering
Material	Housing and pull lever are Lexan® polycarbonate or equal
Pull Lever Color	White with red raised lettering
Housing Dimensions	5" H x 3-3/4" W x 1" D (127 mm x 95 mm x 25 mm)

Addressable Manual Station Semi-Flush Mounting

2 S4099-0001-7 5/2006

Addressable Manual Stations Surface Mounting

Preferred Mounting. For surface mounting of these addressable manual stations, the preferred electrical boxes are shown in the illustration to the right.

Additional Mounting Reference. Refer to page 4 for Wiremold box mounting compatibility.

4099 Series Addressable Manual Station

Surface Mount Side View with Internal Detail

Application Reference

Refer to NFPA 72, the *National Fire Alarm Code*, and all applicable local codes for complete requirements for manual stations. The following summarizes the basic requirements.

1. Stations shall be located in the normal path of exit and distributed in the protected area such that they are unobstructed and readily accessible.
2. Mounting shall be with the operable part not less than 3-1/2 ft (1.1 m) and not more than 4-1/2 ft (1.37 m) above floor level.
3. At least one station shall be provided on each floor. Additional stations shall be provided to obtain a travel distance not more than 200 ft (61 m) to the nearest station from any point in the building.
4. When manual station coverage appears limited in any way, additional stations should be installed.

3 S4099-0001-7 5/2006

MANUAL PULL STATION — SCALE: NONE — 2

Step 4. Wiring Network Cards, *Continued*

Fiber-Optic Wiring

Connectors U1 (transmitter) and U2 (receiver) on the 4100-6057 Fiber-Optic Media Card are used to connect 4100-6014 NICs across parts of a network.

Note: ST connectors with long strain relief boots are to be used with the fiber optic cable.

Figure 6-10 shows how two network nodes are connected via fiber-optic cable.

Figure 6-10. Fiber Wiring

Fiber Optic Connection Types

~~**Dual Fiber Optic Cable Connections.** The standard fiber optic connection between network nodes uses two fiber optic cables, one for transmit, and the other for receive. This connection allows for optimum communications distance.~~

~~The available communications distance is determined by the properties of the specific fiber cable used. Distances can be determined using the information and examples shown in Table 6-3.~~

Single Fiber Optic Cable Connections. For applications where a single fiber cable is available, or where use of a single cable is desired, using a model 4190-9010 Bi-Directional Coupler at each node combines the separate transmit and receive signals into a single path (refer to the requirements list).

This connection allows use of a single fiber cable, but it does reduce communications distance as indicated in the information and examples shown in Table 6-4.

Continued on next page

6-13

Step 4. Wiring Network Cards, *Continued*

4190-9010 Coupler Requirements

The 4190-9010 Coupler (271-012) is used with the 565-261 Fiber Optic Media Board (revision "C" or higher), the 566-376 or the 746-109. Two 4190-9010 Bi-Directional Couplers are required per connection, one at each node.

The 4190-9010 is equipped with type ST connectors. To make type ST to type ST connections, an ST to ST coupler, by others, is required. ST to ST Couplers are available from:

Black Box, part # FO200
Fiber Instrument Sales, part # F1-8101
Newark Electronics, part # 95F2097
(or equivalent)

~~**Table 6-3. Dual Fiber Optic Cable Communications Distance Examples**~~

Fiber Type [1]	MIFL [2]	Power Margin	Distance [3]	Budget [3]
50/125 numerical aperture = 0.2	4 dB/km	4 dB	10,000 ft (3.05 km)	17 dB
	3 dB/km	3 dB	15,000 ft (4.57 km)	
62.5/125 numerical aperture = 0.275	4 dB/km	4 dB	13,000 ft (3.96 km)	21.4 dB
	3.75 dB/km	3 dB	15,000 ft (4.57 km)	

*See notes at bottom of page.

Table 6-4. Single Fiber Optic Cable Communications Distance Examples Using 4190-9010 Bi-Directional Couplers

Fiber Type [1]	MIFL [2]	Power Margin	Distance [3]	Budget [3]	4190-9010 Coupler Loss	ST to ST Coupler Loss
50/125 numerical aperture = 0.2	3 dB/km	2 dB	7,650 ft (2.33 km)	21.4 dB	9.4 dB	3 dB
62.5/125 numerical aperture = 0.275	3.2 dB/km		8,200 ft (2.5 km)			2 dB

Notes for Table 6-3 and 6-4:

1. Cable specifications are for 50 or 62.5 micron core with 125 micron cladding, multi-mode graded index fiber. Wavelength = 850 nm.
2. MIFL = Maximum Individual Fiber Loss. Numbers shown are for example reference only, refer to specific cable for exact specification.
3. Maximum cable length is determined by distance listed or by reaching budget value, whichever is shorter. Maximum distances listed for dual fiber cable are shorter than would be calculated. Budget using 4190-9010 Bi-Directional Coupler is the same with either size cable because the coupler input cables are 62.5/125 fiber allowing launch power to be the same.

Continued on next page

6-14

Networking

FIBER OPTIC INTERCONNECT — SCALE: NONE — 3

Simplex — True*Alarm*® Fire Alarm Controls

*UL, ULC, CSFM Listed; FM Approved; MEA (NYC) Acceptance**

Model 4010 Fire Alarm Control Panel for TrueAlarm Analog Sensors and IDNet™ Addressable Devices

Features

Standard features include:

- Up to 250 addressable TrueAlarm sensor or addressable device points using IDNet communications that operate *with either shielded or unshielded* twisted pair wiring**
- Four, 2 A notification appliance circuits (NACs) with solid state current protection
- Power supply/battery charger with 4 A available for NACs and auxiliary power
- Internal event reporting DACT module (standard on models 4010-9101, 4010-9102, & 4010-9150)
- UL listed to Standard 864

Installation convenience features:

- Power-limited design provides electronic modules on a one-piece chassis with up-front terminal blocks for wiring access
- Compact NEMA 1 rated cabinet is available in beige or red and can be pre-shipped for early installation

Setup, programming, and maintenance features:

- Device level ground fault search, locate, and isolate
- *Auto Program* for general alarm operation
- TrueAlarm individual analog sensing with front panel information and selection access
- "Dirty" TrueAlarm sensor maintenance alerts, service and status reports including "almost dirty"
- Default TrueAlarm sensor device type operation
- TrueAlarm sensor peak value performance report
- Duplicate address error detection
- Front panel or PC programming
- WALKTEST™ silent or audible system test†
- Software verification simulation mode

Supports the following IDNet devices:

- Addressable manual stations; TrueAlarm sensor bases, duct housings, and isolator bases
- Quad-state zone adapter modules (ZAMs) for initiating device monitoring
- Quad-state line powered individual addressable modules (IAMs) for initiating device monitoring and relay control
- 4009 IDNet NAC Extenders and TrueAlert® Addressable Controllers and accessories

Available option modules include:

- Door mounted 24 LED annunciator (std. on ULC models)
- Network connection, or Point Reporting DACT
- Class A, NAC adapter module
- RS-232 ports for printer and maintenance PC
- Expansion power supply; Auxiliary Relay Module or City Interface
- Equipment for Suppression Release Applications (refer to data sheet S4010-0003)

Compatible with Simplex® auxiliary panels:

- 4003 Voice Control Panel
- 4081 Battery Cabinet with charger for 50 Ah batteries

4010 Fire Alarm Control Panel (with standard door)

Description

TrueAlarm fire alarm control panels have the ability to provide location accuracy for monitoring and control. When equipped with TrueAlarm analog sensing for smoke and heat detection, the processing power of the control panel also has the ability to analyze conditions at each location to provide accurate detection with significantly reduced maintenance costs.

The 4010 TrueAlarm Fire Alarm Control Panel has been specifically designed to provide addressable operation and analog detection in a cost-effective package for application sizes that previously were considered only appropriate for conventional zoned monitoring.

Installation and Service Ease. The 4010 mounts on a single chassis for quick installation and removal. Terminal blocks are large and up-front for easy access and inspection. Optional modules are easily and quickly installed, and programmed as required.

The 4010 cabinet provides convenient stud markers for drywall thickness and nail-hole knockouts for quicker mounting. Smooth cabinet surfaces are provided for locally cutting conduit entrance holes exactly where required. 4010 cabinets and electronics can be ordered separately, allowing early cabinet installation.

Ground Fault Assistance. Ground fault problems often occur during installation. The 4010 provides isolating circuitry, control of isolator bases, and software-controlled sequencing to isolate ground faults to specific identified locations. This assistance helps the installer to accurately locate the wiring problem for quicker repair.

* Refer to page 6 for listing details. This product has been approved by the California State Fire Marshal (CSFM) pursuant to Section 13144.1 of the California Health and Safety Code. See CSFM Listing 7170-0026:226 for allowable values and/or conditions concerning material presented in this document. It is subject to re-examination, revision, and possible cancellation. Accepted for use – City of New York Department of Buildings – MEA35-93E. Additional listings may be applicable; contact your local Simplex product supplier for the latest status. Listings and approvals under Simplex Time Recorder Co. are the property of Tyco Safety Products Westminster.

** TrueAlarm analog smoke detection and IDNet addressable devices are protected by one or more of the following U.S. Patents: 5,155,468; 5,173,683; 5,543,777; 5,400,014; 5,552,765; 5,552,763; DES. 377,460; 4,796,025; 5,966,002; and 6,034,601.

† WALKTEST system test is protected under U.S. patent # 4,725,818.

S4010-0001-12 8/2009

4010 Module Layout Reference

Mounting Information

Tyco is a registered trademark of Tyco International Services GmbH and is used under license. Simplex, the Simplex logo, TrueAlarm, WALKTEST, IDNet, SmartSync, and TrueAlert are trademarks of Tyco International Ltd. and its affiliates and are used under license. NFPA 72 and National Fire Alarm Code are trademarks of the National Fire Protection Association (NFPA).

Simplex — *Tyco Safety Products Westminster • Westminster, MA • 01441-0001 • USA* — S4010-0001-12 8/2009
www.tycosafetyproducts-usa-wm.com

© 2009 Tyco Safety Products Westminster. All rights reserved. All specifications and other information shown were current as of document revision date and are subject to change without notice.

FIRE ALARM CONTROL PANELS — SCALE: NONE — 4

REGISTERED PROFESSIONAL ENGINEER — RONALD J. MUDRY — License No. FP1504 — Expires 6-30-13 — FIRE PROTECTION — STATE OF CALIFORNIA

MUDRY & ASSOCIATES
Fire Protection Engineering, Consulting and Design
12752 Valley View Street, Suite D
Garden Grove, California 92845
(714) 373-5741
Fax (714) 373-5781
e-mail: fpe@mudry.us

DATE	SUB	DESCRIPTION	BY	A'PD
07/22/11	C	100% FINAL DESIGN		
06/30/11	B	95% NEAR-FINAL DESIGN		
01/31/11	A	30% PRELIMINARY DESIGN		

NATIONAL AERONAUTICS AND SPACE ADMINISTRATION
DRYDEN FLIGHT RESEARCH CENTER
EDWARDS, CA

DRAWING TITLE: FIRE ALARM DETAILS

PROJECT TITLE: REPAIR CENTER-WIDE FIRE MAINS DESIGN SUBMITTAL "C"

APPROVALS	DATE
Chief, Facilities Engineering & Asset Mgmt. Office	2-1-12
Project Requestor/Customer	2-1-12
Facilities Project Manager	1-31-12
Chief, Office of Protective Services	02/01/12
Chief – Safety, Health and Environmental Office	2-1-12
DFRC Chief Information Officer	1 Feb 12

DATE STRTD	07/23/10	DATE PRNTD	07/22/11
DRAWN BY	RJM	EDM-1697	
SCALE	AS NOTED	TRADE SH. No. FA-5	SHEET No. 34 of 37
FILE NAME			

ABREVIATIONS

A/C	ASPHALT CONCRETE
ADA	AMERICAN WITH DISABILITIES ACT
A.F.F.	ABOVE FINISH FLOOR
A.F.G.	ABOVE FINISH GRADE
AWG	AMERICAN WIRE GAUGE
AMP, A	AMPERE
A.I.C.	AMPERES INTERRUPTING CAPACITY (SYMMETRICAL)
AF/AT	AMP FRAME, AMP TRIP
AS/AF	AMP SWITCH, AMP FUSE
CIRC.,CKT.	CIRCUIT
CB	CIRCUIT BREAKER
C	CONDUIT
CM	CENTIMETER
C.O.	CONDUIT ONLY, COMPLETE WITH PULLSTRING
CONN	CONNECTED
CPT	CONTROL POWER TRANSFORMER
CLCB	CURRENT LIMITING CIRCUIT BREAKER
CLF	CURRENT LIMITING FUSE
CT	CURRENT TRANSFORMER
DIA	DIAMETER
E.C.	ELECTRICAL CONTRACTOR
EMS	ENERGY MANAGEMENT CONTROL SYSTEM
EMT	ELECTRICAL METALLIC TUBING
ENT	ELECTRICAL NON-METALLIC TUBING
EWC	ELECTRIC WATER COOLER
E-O-L	END-OF-LINE CIRCUIT TERMINATOR.
EF	EXHAUST FAN
E/G	EQUIPMENT GROUND (GREEN)
E	EXISTING EQUIPMENT
EP	EXPLOSION PROOF
FA	FIRE ALARM
FLA	FULL LOAD AMPS
GFCI	GROUND FAULT CIRCUIT INTERRUPTER.
GRD	GROUND
HOA	HAND-OFF-AUTO
HVAC	HEATING, VENTILATING AND AIR CONDITIONING
H.,W.,D.,L.	HEIGHT, WIDTH, DEPTH, LENGTH
HID	HIGH INTENSITY DISCHARGE
HP	HORSEPOWER
HPS	HIGH PRESSURE SODIUM
I/G	ISOLATED GROUND
JBOX	JUNCTION BOX
K	DEGREE KELVIN
KVA	KILOVOLT AMPERES
KW	KILOWATT
LCL	LONG CONTINUOUS LOAD
L.F.	LINEAR FEET
LTG, LTS	LIGHTING
LPS	LOW PRESSURE SODIUM
MAX.	MAXIMUM
MCB	MAIN CIRCUIT BREAKER
MIN.	MINIMUM
MLO	MAIN LUGS ONLY
MM	MILLIMETER
MV	MERCURY VAPOR
MH	METAL HALIDE
MCC	MOTOR CONTROL CENTER
MCM	THOUSAND CIRCULAR MILS
MCP	MOTOR CIRCUIT PROTECTOR
MFR.	MANUFACTURER
MTD	MOUNTED
MW	MICROWAVE
NEC	NATIONAL ELECTRICAL CODE
NC	NORMALLY CLOSED
NO	NORMALLY OPENED
NF	NON-FUSED
NIC	NOT IN CONTRACT
NL	NIGHT LIGHT
NO. or #	NUMBER
OFCI	OWNER FURNISHED, CONTRACTOR INSTALLED.
P	POLE
PC	PHOTOCELL
PRIMARY	OVER 600 VOLTS
PH. or Ⓟ	PHASE
PROVIDE	FURNISH, INSTALL AND CONNECT.
PT	POTENTIAL TRANSFORMER
PA	PUBLIC ADDRESS
REC, RECEPT	RECEPTACLE
REF	REFRIGERATOR
RGS	RIGID GALVANIZED STEEL
R	RETAINED FROM DEMOLITION, INSTALLED IN NEW LOCATION
SECONDARY	600 VOLTS AND LESS
SQ.	SQUARE
TC	TIMECLOCK
TEL/DATA	TELEPHONE AND DATA
TV	TELEVISION
TYP	TYPICAL
U.O.N.	UNLESS OTHERWISE NOTED
V	VOLTS
VA	VOLT AMPERES
WP	WEATHERPROOF
W	WIRE

ANNOTATIONS

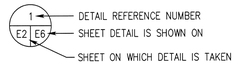

DETAIL REFERENCE NUMBER
SHEET DETAIL IS SHOWN ON
SHEET ON WHICH DETAIL IS TAKEN

(NUMBER IS SHOWN FOR BRANCH CIRCUIT PURPOSES ONLY, NOT FOR PLAN NOTE REFERENCE, REFER TO NOTES ON SHEET, OR AS DIRECTED. MATERIAL TAKE-OFF). NUMBER "93" INDICATES FIXTURE WATTS

LIGHTING FIXTURE CALL OUT, "3" INDICATES FIXTURE TYPE (REFER TO LIGHTING FIXTURE SCHEDULE), NUMBER ADJACENT INDICATES QUANTITIES

REVISION REFERENCE.

POWER SYMBOLS

DUPLEX RECEPTACLE, 120, 20A

DUPLEX GFCI RECEPTACLE, 120V, 20A

JUNCTION BOX, WALL MOUNTED IN TRENCH AS REQUIRED BY N.E.C..

SURFACE MOUNTED ELECTRICAL PANELBOARD OR LOAD CENTER. REFER TO PANEL SCHEDULE.

COMBINATION MOTOR STARTER AND DISCONNECT SWITCH. SEE PLANS FOR RATING AND ENCLOSURE TYPE.

SAFETY SWITCH, FUSED. SEE PLANS FOR RATING AND ENCLOSURE TYPE.

LIGHTING SYMBOLS

(2) HEAD EMERGENCY FIXTURE WITH BATTERY

LIGHTING CIRCUIT SWITCH

DOWNLIGHT

LINEAR FLUORESCENT FIXTURE

1'x4' FLUORESCENT FIXTURE

FIRE ALARM SYSTEM STROBE

ELECTRICAL GENERAL NOTES

1. ALL WORK IS TO BE PERFORMED IN ACCORDANCE WITH 2008 NATIONAL ELECTRICAL CODES AND ALL APPLICABLE LOCAL CODES AND ORDINANCES.

2. BOND AND GROUND ALL EQUIPMENT IN ACCORDANCE WITH 2008 NATIONAL ELECTRICAL CODE.

3. ALL WIRING IS TO BE COPPER UNLESS OTHERWISE NOTED. INSULATION SHALL BE TYPE XHHW OR THHN/THWN.

4. FIRE PENETRATIONS, PENETRATIONS IN ALL 1 HR. AND 2 HR. WALLS REQUIRE PROTECTED PENETRATIONS. ALL PENETRATIONS TO BE FIRE CAULKED WITH AN I.C.B.O. TESTED AND APPROVED ASSEMBLY. PENETRATIONS AT 1 HR. WALLS SHALL BE APPROVED FOR 1 HR. RATING; PENETRATIONS AT 2 HR. WALLS SHALL BE APPROVED FOR 2 HR. RATING. STOPPING SHALL BE AN APPROVED MATERIAL SECURELY INSTALLED AND CAPABLE OF MAINTAINING ITS INTEGRITY WHEN SUBJECTED TO TEST TEMPERATURES PRESCRIBED IN U.B.C. STANDARD NO. 43-1 FOR THE SPECIFIC WALL OR PARTITION.

   OPENINGS IN WALLS AND PARTITIONS SHALL BE PROTECTED AS SPECIFIED IN SECTION 4306. WHEN FIRE-RATED WALL AND PARTITIONS REQUIRE PROTECTED OPENINGS, THE FOLLOWING PENETRATIONS INTO OR THROUGH SUCH CONSTRUCTION ARE PERMITTED.

   A. COPPER OR FERROUS PIPES OR CONDUITS MAY PENETRATE THE WALLS OR PARTITIONS, PROVIDED FIRE STOPPING IS PROVIDED IN ACCORDANCE WITH THE FIRST OF THIS SECTION.

   B. OPENINGS FOR STEEL ELECTRICAL OUTLET BOXES NOT EXCEEDING 16 SQUARE INCHES OR WALL OR PARTITION AREA. OUTLET BOXES ON OPPOSITE SIDES OF WALLS OR PARTITIONS SHALL BE SEPARATED BY A HORIZONTAL DISTANCE OF 24 INCHES.

   C. WHEN WALLS ARE PENETRATED BY OTHER MATERIALS OR HERE LARGER OPENINGS ARE REQUIRED THAN PERMITTED IN (B) ABOVE, THEY SHALL BE QUALIFIED BY TESTS CONDUCTED IN ACCORDANCE WITH THE PROVISIONS OF SECTION 4302 (B).

5. PROVIDE A GROUND WIRE IN ALL CONDUITS SIZED IN ACCORDANCE WITH N.E.C. 250.

6. THE INTENT OF THESE DRAWINGS IS TO DESCRIBE A COMPLETE AND OPERABLE SYSTEM. BRING ANY QUESTIONS TO THE ENGINEER'S ATTENTION PRIOR TO BIDDING.

7. ALL INSTALLATIONS SHALL MEET FULLY WITH ALL THE REQUIREMENTS OF THE NATIONAL ELECTRICAL CODE (N.E.C.), MATERIAL SHALL BE U.L. LABELED OR LISTED.

8. ALL EQUIPMENT, SHALL BE INSTALLED PER MANUFACTURER'S REQUIREMENTS. PREMISES SHALL BE CLEANED OF DIRT AND DEBRIS.

9. COORDINATE ELECTRICAL WORK WITH REQUIREMENTS OF OTHER TRADES.

10. IN ADDITION TO WIRING HERE INDICATED, CONTRACTOR SHALL REVIEW PLUMBING AND OTHER DRAWINGS PRIOR TO BID AND INCLUDE ALL WIRING MATERIALS (INCLUDING RELAYS AND CONTROL DEVICES) INDICATED THERON AS PART OF ELECTRICAL WORK.

REGISTERED PROFESSIONAL ENGINEER — Richard K. Gilmore — No. E015151 — Exp. 6-30-12 — ELECTRICAL — STATE OF CALIFORNIA

DONN C. GILMORE & ASSOCIATES, INC.
Consulting Mechanical and Electrical Engineers
DCGA
4051 E. La Palma Ave., Ste. A
Anaheim, CA 92807
Ph.: 714.630.4291
Fax: 714.630.4805

DATE	SUB	DESCRIPTION	BY	A'PD
07/22/11	C	100% FINAL DESIGN		
06/30/11	B	95% NEAR-FINAL DESIGN		
01/31/11	A	30% PRELIMINARY DESIGN		

NATIONAL AERONAUTICS AND SPACE ADMINISTRATION
DRYDEN FLIGHT RESEARCH CENTER
EDWARDS, CA

DRAWING TITLE
ELECTRICAL
LEGEND AND NOTES

PROJECT TITLE
REPAIR CENTER-WIDE FIRE MAINS
DESIGN SUBMITTAL "C"

APPROVALS	DATE
Chief, Facilities Engineering & Asset Mgmt. Office	2-1-12
Project Requestor/Originator	2-1-12
Facilities Project Manager	1-31-12
Chief, Office of Protective Services	2/01/12
Chief - Safety, Health and Environmental Office	2-1-12
DFRC Chief Information Officer	1 Feb 12

DATE STRTD	07/23/10	DATE PRNTD	07/22/11
DRAWN BY	WAS		EDM-1697
SCALE	NONE	TRADE SH. No. E1	
FILE NAME			SHEET No. 35 of 37

PARITAL ELECTRICAL SITE PLAN - GRID C-1
SCALE: 1"=40'-0"

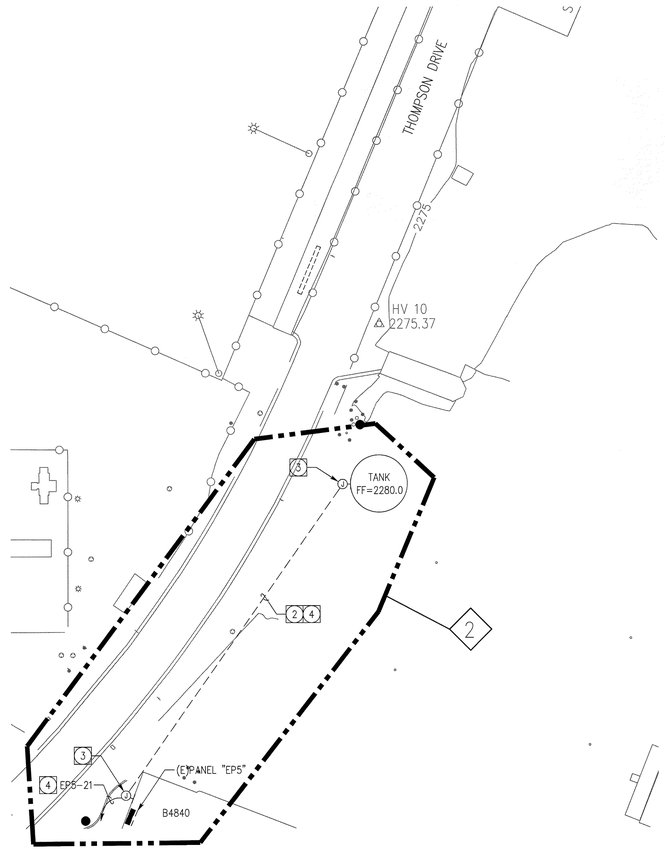

PARITAL ELECTRICAL SITE PLAN - GRID N-10
SCALE: 1"=40'-0"

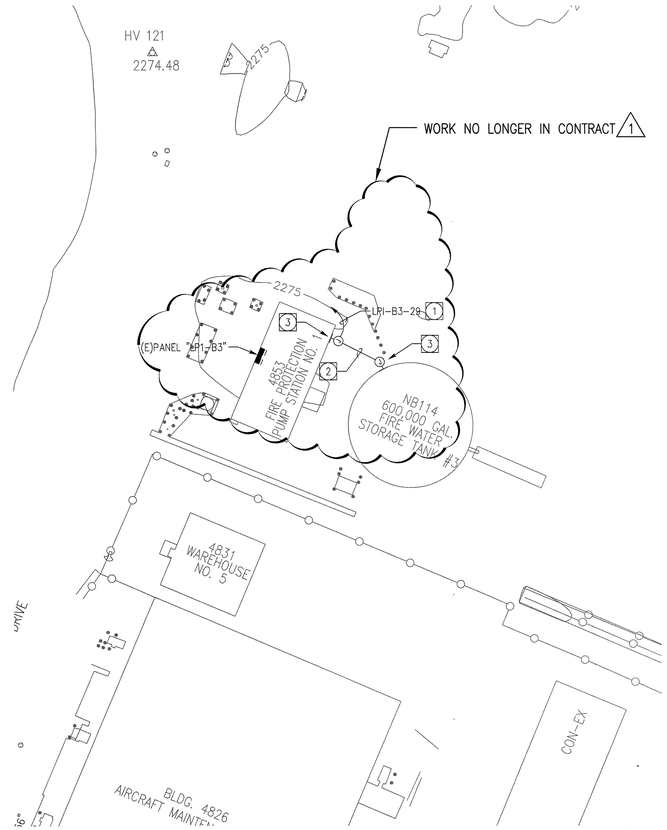

PARITAL ELECTRICAL SITE PLAN - GRID N-10
SCALE: 1"=40'-0"

N

REFERENCE NOTES:

1. PROVIDE 3/4"C. - 2#10, 1#10 GND.
2. PROVIDE MINIMUM 18" CONDUIT BURIAL DEPTH
3. PROVIDE WEATHER PROOF JUNCTION BOX MOUNTED ON EXTERIOR WALL AT +48" TO TOP, ABOVE FINISHED GRADE.
4. PROVIDE 1"C-2 #8, 1 #10 GND.
5. PROVIDE MINIMUM 24" CONDUIT BURIAL DEPTH.
6. PROVIDE CIRCUIT CONNECTION TO EXISTING SPARE 20A BREAKER IN EXISTING POLE MOUNTED LOAD CENTER.

REGISTERED PROFESSIONAL ENGINEER
LOUIS K. KAPLAN
No. E015151
Exp. 6-30-12
ELECTRICAL
STATE OF CALIFORNIA

DONN C. GILMORE & ASSOCIATES, INC.
Consulting Mechanical and Electrical Engineers
DCGA
4051 E. La Palma Ave., Ste. A
Anaheim, CA 92807
Ph.: 714.630.4291
Fax: 714.630.4805

DATE	SUB	DESCRIPTION	BY	A'PD
05/10/12		NASA EDITS - DELTA 1 1	TSS	TSS
07/22/11	C	100% FINAL DESIGN		
06/30/11	B	95% NEAR-FINAL DESIGN		
01/31/11	A	30% PRELIMINARY DESIGN		

NATIONAL AERONAUTICS AND SPACE ADMINISTRATION
DRYDEN FLIGHT RESEARCH CENTER
EDWARDS, CA

DRAWING TITLE
ELECTRICAL
UTILITY PLAN

PROJECT TITLE
REPAIR CENTER-WIDE FIRE MAINS
DESIGN SUBMITTAL "C"

APPROVALS	DATE
Chief, Facilities Engineering & Asset Mgmt. Office	5-10-12
Project Requestor/Customer	5-10-12
Facilities Project Manager	5/10/12
Chief, Office of Protective Services	5/10/12
Chief, Safety, Health and Environmental Office	5-10-12
DFRC Chief Information Officer	10 May 12

DATE STRTD	07/23/10	DATE PRNTD	07/22/11
DRAWN BY	WAS		EDM-1697
SCALE	NONE	TRADE SH. No. E2	
FILE NAME			SHEET No. 36 of 37

PANEL (E) EP5 — 120/208 VOLT 3PH, 4W — 225 AMP COPPER BUS

LOCATION: B4840 Pump Room
MOUNTING: Surface
MAIN C.B: AMPS
LOAD: 0 AMP 0 KVA

	CK #	LOAD (VA) LINE A	LINE B	LINE C	LOAD DESCRIPTION	OUTLETS M	RC	G	LT	C.B. P	TRP	BUS ABC	C.B. TRP	P	OUTLETS LT	G	RC	M	LOAD DESCRIPTION	LOAD (VA) LINE A	LINE B	LINE C	CK #
	1				EXISTING LOAD					1	20	A	20	1					SPARE				2
	3				EXISTING LOAD					1	20	B	20	1					SPARE				4
	5				EXISTING LOAD					1	20	C	20	1					EXISTING LOAD				6
	7				EXISTING LOAD					1	20	A	20	1					EXISTING LOAD				8
	9				EXISTING LOAD					1	20	B	20	1					EXISTING LOAD				10
	11				EXISTING LOAD					1	20	C	20	1					EXISTING LOAD				12
	13				EXISTING LOAD					1	20	A	20	1					EXISTING LOAD				14
	15				EXISTING LOAD					1	20	B	20	1					EXISTING LOAD				16
	17				EXISTING LOAD					2	30	C	30	2					EXISTING LOAD				18
	19				SPACE					–	–	A	–	–					EXISTING LOAD				20
NOTE 1	21		50		WATER TANK SENSOR					1	20	B	30	2					EXISTING LOAD				22
	23				SPACE							C	–	–									24
	25											A											26
	27											B											28
	29											C											30
	31											A											32
	33											B											34
	35											C											36
	37											A											38
	39											B											40
	41											C											42
		0	50	0	SUBTOTALS														SUBTOTALS:	0	0	0	
																			LINE TOTALS:	0	50	0	
																			LCL ADDER:				
																			TOTAL VA/PHASE:	0	50	0	
																			LINE AMPS:	0	0	0	

NOTE:
1. PROVIDE NEW CIRCUIT BREAKER. TYPE AND AIC RATING TO MATCH EXISTING.

PANEL (E) LPI B3 — 120/208 VOLT 3PH, 4W — 225 AMP COPPER BUS

LOCATION: B4853
MOUNTING: Surface
MAIN C.B: AMPS
LOAD: 0 AMP 0 KVA

	CK #	LOAD (VA) LINE A	LINE B	LINE C	LOAD DESCRIPTION	OUTLETS M	RC	G	LT	C.B. P	TRP	BUS ABC	C.B. TRP	P	OUTLETS LT	G	RC	M	LOAD DESCRIPTION	LOAD (VA) LINE A	LINE B	LINE C	CK #
	1				EXISTING LOAD					1	20	A	30	1					EXISTING LOAD				2
	3				EXISTING LOAD					1	20	B	40	1					EXISTING LOAD				4
	5				EXISTING LOAD					1	20	C	40	1					EXISTING LOAD				6
	7				EXISTING LOAD					1	20	A	30	1					EXISTING LOAD				8
	9				EXISTING LOAD					1	20	B	20	1					EXISTING LOAD				10
	11				EXISTING LOAD					1	20	C	20	1					EXISTING LOAD				12
	13				EXISTING LOAD					1	20	A	20	1					EXISTING LOAD				14
	15				EXISTING LOAD					1	20	B	20	1					EXISTING LOAD				16
	17				EXISTING LOAD					1	20	C	20	1					EXISTING LOAD				18
	19				EXISTING LOAD					1	20	A	20	1					EXISTING LOAD				20
	21				EXISTING LOAD					1	15	B	20	1					EXISTING LOAD				22
	23				EXISTING LOAD					1	20	C	20	1					EXISTING LOAD				24
	25				EXISTING LOAD					1	20	A	20	1					EXISTING LOAD				26
	27				SPACE							B							SPACE				28
NOTE 1	29			50	WATER TANK SENSOR					1	20	C							SPACE				30
	31				SPACE							A							SPACE				32
	33				SPACE							B							SPACE				34
	35				SPACE							C							SPACE				36
	37				SPACE							A							SPACE				38
	39				SPACE							B							SPACE				40
	41				SPACE							C							SPACE				42
		0	0	50	SUBTOTALS														SUBTOTALS:	0	0	0	
																			LINE TOTALS:	0	0	50	
																			LCL ADDER:				
																			TOTAL VA/PHASE:	0	0	50	
																			LINE AMPS:	0	0	0	

NOTE:
1. PROVIDE NEW CIRCUIT BREAKER. TYPE AND AIC RATING TO MATCH EXISTING.

REGISTERED PROFESSIONAL ENGINEER — SCOTT KAUFFMAN — No. E015151 — Exp. 6-30-12 — ELECTRICAL — STATE OF CALIFORNIA

DONN C. GILMORE & ASSOCIATES, INC.
Consulting Mechanical and Electrical Engineers
DCGA
4051 E. La Palma Ave., Ste. A
Anaheim, CA 92807
Ph.: 714.630.4291
Fax: 714.630.4805

DATE	SUB	DESCRIPTION	BY	A'PD
07/22/11	C	100% FINAL DESIGN		
06/30/11	B	95% NEAR-FINAL DESIGN		
01/31/11	A	30% PRELIMINARY DESIGN		

NATIONAL AERONAUTICS AND SPACE ADMINISTRATION
DRYDEN FLIGHT RESEARCH CENTER
EDWARDS, CA

DRAWING TITLE
ELECTRICAL
PANEL SCHEDULES

PROJECT TITLE
REPAIR CENTER-WIDE FIRE MAINS
DESIGN SUBMITTAL "C"

APPROVALS	DATE
Chief, Facilities Engineering & Asset Mgmt. Office	2-1-12
Project Requestor/Customer	2-1-12
Facilities Project Manager	1-31-12
Chief, Office of Protective Services	02/01/12
Chief – Safety, Health and Environmental Office	2-1-12
DFRC Chief Information Officer	1 Feb 12

DATE STRTD	07/23/10	DATE PRNTD	07/22/11
DRAWN BY	WAS		EDM-1697
SCALE	NONE	TRADE SH. No. E3	
FILE NAME			SHEET No. 37 of 37