1. MATERIAL TO BE 2219 T42 ALUMINUM ALLOY.
2. 125 ALL OVER UNLESS OTHERWISE NOTED.
3. IDENTIFICATION MARKING SHALL BE DONE BY THE MONODE ELECTROLYTE PROCESS, OR OTHER ACCEPTABLE ELECTRO-CHEMICAL ETCHING PROCESS. NUMBERS & LETTERS SHALL BE .1 HIGH.

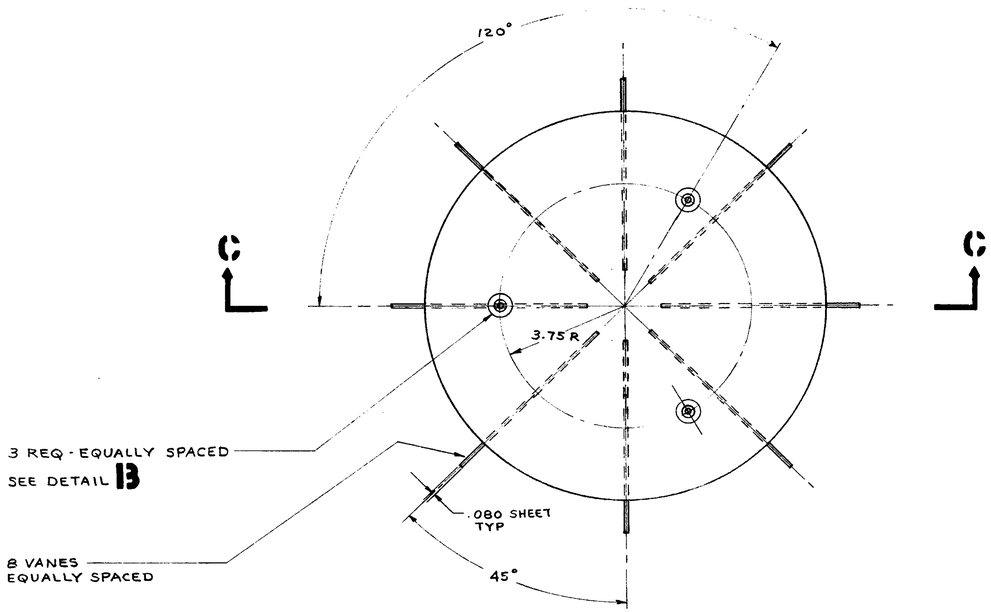

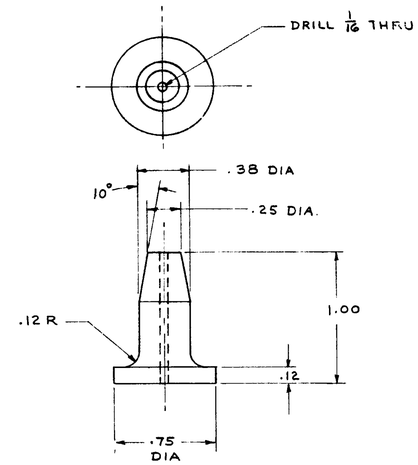

DETAIL B 64 ALL OVER
SCALE: 2/1 3 REQ

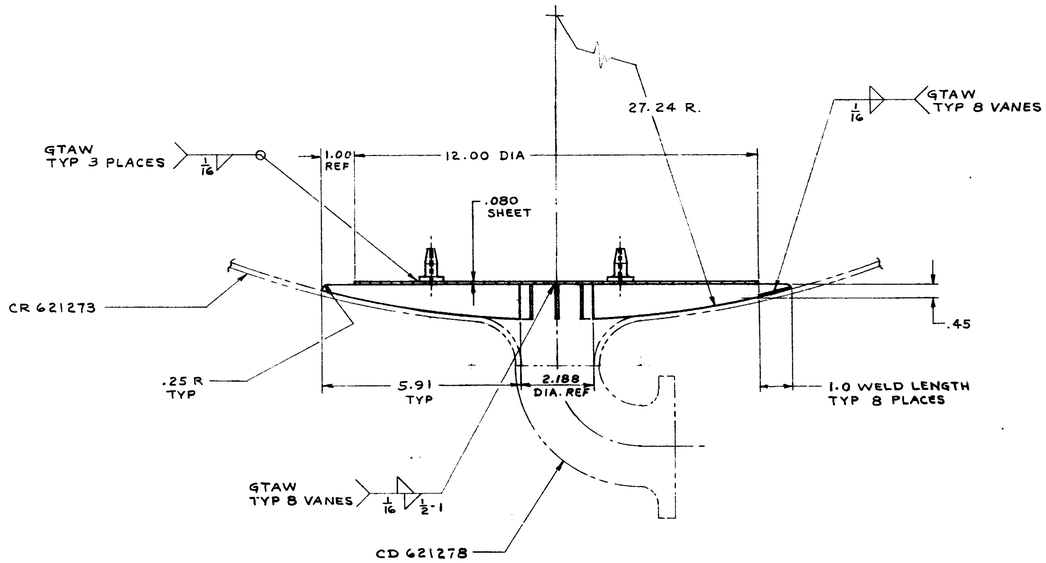

C - C

CD621277

[redacted]

SCALE 1/2 & NOTED	1-REQ		FJG	2-11-70	BAFFLE-ANTI-VORTEX & INSTALLATION
.06			KID	2-2-70	METHANE TANK ASSEMBLY CR 621273
.03					
1°					NATIONAL AERONAUTICS AND SPACE ADMINISTRATION LEWIS RESEARCH CENTER CLEVELAND, OHIO
.005-.010				2-11-70	CD621277