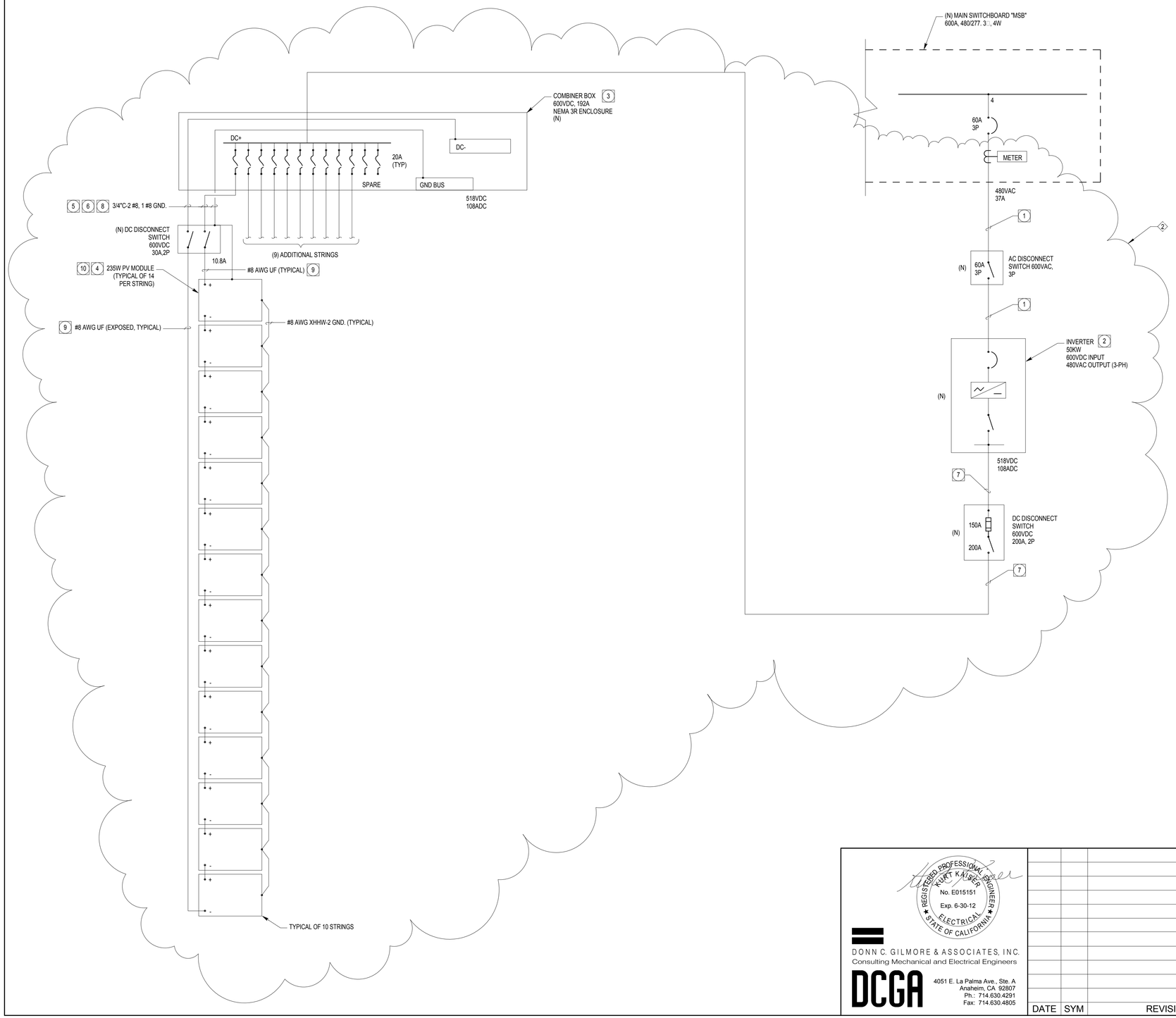

SINGLE LINE DIAGRAM NOTES:

1. PROVIDE 1"C-3 #4, 1 #8 GND.
2. PROVIDE PV SYSTEM INVERTER WITH INTEGRATED DC AND AC DISCONNECT SWITCHES, UBC SEISMIC ZONE 4 RATING, 600VDC INPUT MAXIMUM, AND 480VAC, 60HZ NOMINAL OUTPUT. PROVIDE SATCON MODEL PVS-50 OR APPROVED EQUAL.
3. PROVIDE COMBINER BOX WITH (12) 20A FUSED CIRCUITS AND INTEGRAL FUSE COVER/PULLER IN A NEMA 3R ENCLOSURE. PROVIDE XANTREX MODEL CB12H20-3R OR APPROVED EQUAL.
4. PROVIDE SHARP 235W PV MODLE (MODEL NU-U235FI) OR APPROVED EQUAL. MAXIMUM 37.0VDC OPEN CIRCUIT VOLTAGE RATING, 600VDC SYSTEM VOLTAGE RATING, AND 8.6A SHORT CIRCUIT CURRENT RATING.
5. MINIMUM CONDUCTOR AMPACITY AND OVERCURRENT DEVICE RATING PER NEC ARTICLE 690.8(A)(1) AND 690.8(B)(1).
   MODULE STRING SHORT CIRCUIT CURRENT = 8.6A
   MAXIMUM CURRENT FOR MODULE STRINGS = (8.6A)(1.25) = 10.8A
   MINIMUM CONDUCTOR AMPACITY AND OVERCURRENT DEVICE = (10.8A)(1.25) = 13.4A
6. CONDUCTOR AMPACITY DERATED TO 23.2A FOR 122F AMBIENT TEMPERATURE PER NEC TABLE 310.16.
7. PROVIDE 1 1/2"C-2 #2/0, 1 #6 GND.
8. MAXIMUM VOLTAGE AND CURRENT VALUES CALCULATED PER NEC ARTICLES 690.7(A) AND 690.8(B)(1) RESPECTIVELY.
   MAXIMUM VOLTAGE = (37.0VDC)(1.13)(14) = 585VDC
   MAXIMUM CURRENT = (8.6A)(1.25) = 10.75A
9. PROVIDE TYPE UF INSULATION FOR DIRECT SUNLIGHT INSTALLATION.
10. PV PANEL WIRING DIAGRAM INTERGRATED INTO SINGLE LINE DIAGRAM FOR CLARITY.

CEC APPLICATION NOTES (2007 EDITION)

690-4(b) PHOTOVOLTAIC SOURCE CIRCUITS AND PHOTOVOLTAIC CIRCUITS SHALL NOT BE CONTAINED IN THE SAME RACEWAY, JUNCTION BOX OR FITTINGS AS FEEDERS OR BRANCH CIRCUITS OF OTHER SYSTEMS. CABLE TRAY/OUTLET BOX.

690-4(c) THE CONNECTIONS TO A MODULE OR PANEL SHALL BE ARRANGED SO THAT REMOVAL OF A MODULE OR PANEL FROM A PHOTOVOLTAIC SOURCE CIRCUIT DOSE NOT INTERRUPT A GROUNDED CONDUCTOR TO ANOTHER PHOTOVOLTAIC SOURCE CIRCUIT.

690-4(d) INVERTERS SHALL BE IDENTIFIED FOR USE IN SOLAR PHOTOVOLTAIC SYSTEMS.

690-5 ROOF MOUNTED DC PHOTOVOLTAIC ARRAYS LOCATED ON DWELLINGS SHALL BE PROVIDED WITH DC GROUND-FAULT PROTECTION TO REDUCE FIRE HAZARDS.

690-7(a) THE MAXIMUM SYSTEM OUTPUT CIRCUIT OR SOURCE CIRCUIT VOLTAGE SHALL BE COMPUTED AS THE SUM OF THE RATED OPEN CIRCUIT VOLTAGE OF SERIES - CONNECTED PHOTOVOLTAIC MODULES CORRECTED FOR LOWEST AMBIENT TEMPERATURE.

690-8(b) PHOTOVOLTAIC SYSTEM CURRENTS SHALL BE CONSIDERED CONTINUOUS. THE CIRCUIT CONDUCTORS AND OVER CURRENT DEVICES SHALL BE SIZE TO CARRY NOT LESS THAN 125 PERCENT OF THE MAXIMUM CURRENT, AS CALCULATED IN 690-8(a).

690-31(b) TYPES WE, UF AND USE SINGLE-CONDUCTOR CABLE SHALL BE PERMITTED IN PHOTOVOLTAIC SOURCE CIRCUITS. WHERE EXPOSED TO SUNLIGHT, TYPE UF CABLE, IDENTIFIED AS SUNLIGHT-RESISTANT, SHALL BE USED.

690-34 JUNCTION, PULL AND OUTLET BOXES LOCATED BEHIND MODULES OR PANELS SHALL BE INSTALLED SO THAT THE WIRING CONTAINED IN THEM CAN BE RENDERED ACCESSIBLE DIRECTLY OR BY DISPLACEMENT OD A MODULE(S) OR PANEL(S) SECURED BY REMOVABLE FASTENERS AND CONNECTED BY A FLEXIBLE WIRING SYSTEM.

690-42 THE DC CIRCUIT GROUNDING CONNECTION SHALL BE MADE AT ANY SINGLE POINT ON THE PHOTOVOLTAIC OUTPUT CIRCUIT. LOCATE GROUND CONNECTION AS CLOSE AS POSSIBLE TO PV SOURCE.

690-43 EXPOSED NONCURRENT-CARRYING METAL PARTS OF MODULE FRAMES, EQUIPMENT, AND CONDUCTOR ENCLOSURES SHALL BE GROUNDED REGARDLESS OF VOLTAGE.

690-45 THE EQUIPMENT GROUNDING CONDUCTOR SHALL BE SIZED IN ACCORDANCE WITH 250.122.

REGISTERED PROFESSIONAL ENGINEER
KURT KAISER
No. E015151
Exp. 6-30-12
ELECTRICAL
STATE OF CALIFORNIA

DONN C. GILMORE & ASSOCIATES, INC.
Consulting Mechanical and Electrical Engineers
DCGA
4051 E. La Palma Ave., Ste. A
Anaheim, CA. 92807
Ph.: 714.630.4291
Fax: 714.630.4805

DATE	SYM	REVISION	BY	A'PD

NATIONAL AERONAUTICS AND SPACE ADMINISTRATION

DRYDEN FLIGHT RESEARCH CENTER
EDWARDS, CA

DRAWING TITLE

ELECTRICAL SINGLE LINE DIAGRAM (CONT)

PROJECT TITLE

FACILITIES SUPPORT CENTER BUILDING
100% FINAL DESIGN SUBMITTAL

APPROVALS		DATE
Chief, Facilities Engineering & Asset Mgmt. Office DAN CROWLEY		4/14/11
Project Requestor /Customer DAN CROWLEY		4/14/11
Facilities Project Manager GEMMA FLORES		4/14/11
Chief, Office of Protective Services JOHN ZELLMER		04/14/11
Chief - Safety, Health, and Environmental Office DAN MULLEN		4/14/11
DFRC Chief Information Officer KEN NORLIN		4/14/11

DATE STRTD	11/08/10	DATE PRNTD	03/14/11
DRAWN BY		EDM-1703	
SCALE	AS NOTED	TRADE SH. No.	E0.7
FILE NAME		SHEET No. 161 of 193	

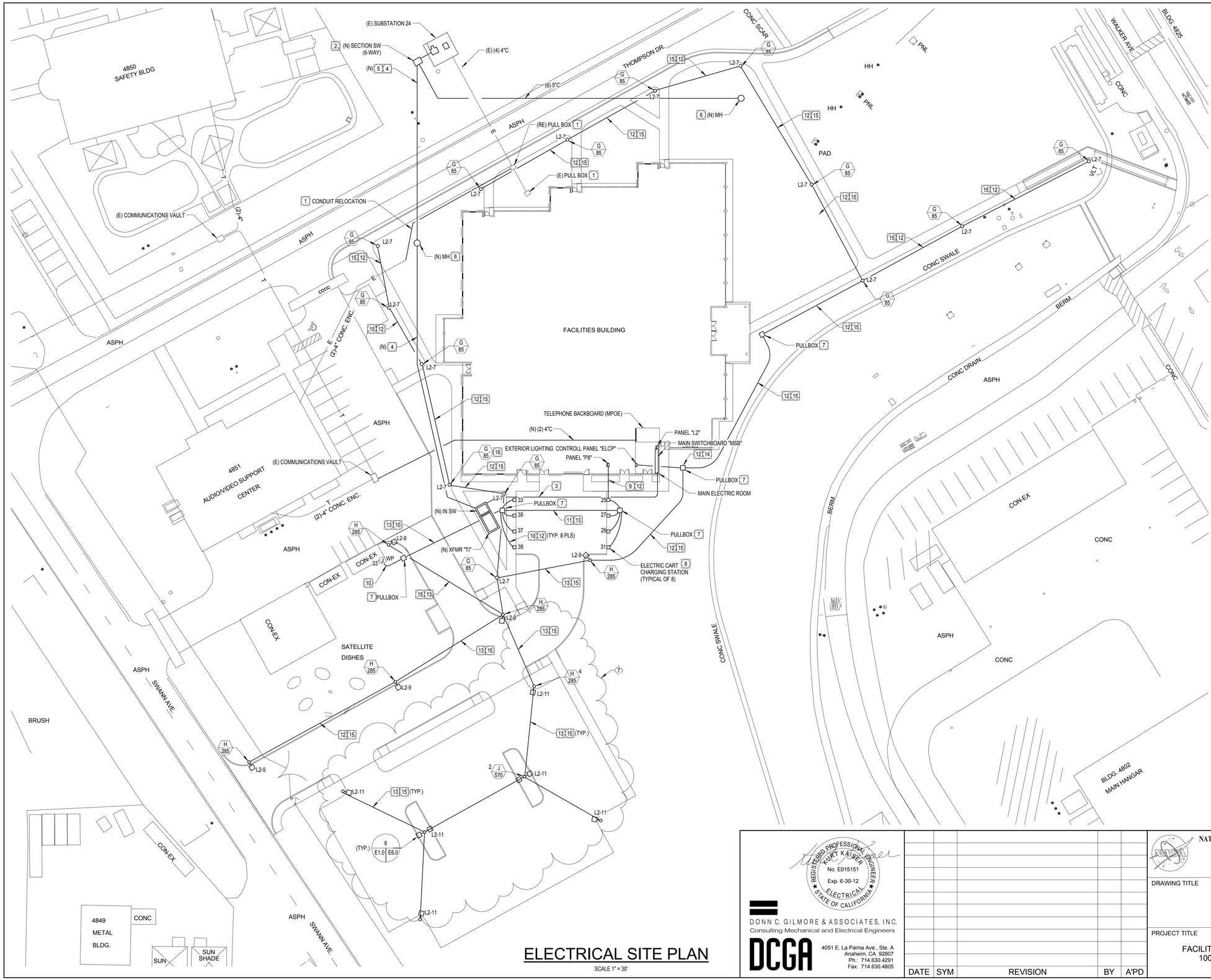

ELECTRICAL SITE PLAN

SCALE 1" = 30'

PLAN SPECIFIC NOTES:

1. RELOCATE EXISTING POWER PULLBOX TO NEW APPROXIMATE LOCATION SHOWN. RELOCATE BUILDING 4851 FEEDER SERVICE CONDUCTORS AND CONDUIT, AS SHOWN, AROUND FACILITY BUILDING FOUNDATION. PROVIDE WATER-PROOF SPLICE OF EXISTING B485 FEEDER CONDUCTORS FROM SUBSTATION 24 AT PULLBOX TO MATCHING FEEDER CONDUCTORS PULLED IN EXISTING CONDUIT TO B4851 MAIN SWITCHBOARD.
2. PROVIDE NEW PAD-MOUNTED 600A, 15VK, 6-WAY, SF6.
3. PROVIDE (3) 3"C-4 #500MCM, 1#2/0 GND. (IN EACH).
4. PROVIDE 5"C - 3# 4/0, 15KV, 133% INSULATION, WITH #1/0 BARE COPPER GROUND WIRE.
5. PROVIDE (4) 5" CONDUIT SPARES, WITH PULL ROPES.
6. PROVIDE NEW PRECAST CONCRETE MANHOLE (6'x8'x6'D), WITH FLUSH TRFFIC RATED COVER.
7. PROVIDE PULL BOX (12"x16"XVARIABLE DEPTH) WITH FLUSH MOUNTED COVER.
8. PROVIDE ELECTRIC CART BOLLARD CHARGING STATION, RATED 120V, 16A, WITH INTEGRATED POWER METER, GROUND FAULT, AND OVER-CURRENT PROTECTION. PROVIDE WITH NEMA TYPE 5-20R RECEPTACLE UNDER LOCKING DOOR, AND NEMA TYPE 3R ENCLOSURE. PROVIDE COULOMB TECHNOLOGIES MODEL CT1001 BOLLARD SERIES OR APPROVED EQUAL.
9. PROVIDE 1-1/2"C - 8#8, 8#8 NEU, AND 8#10 GND.
10. PROVIDE 1"C - 2#8, 1#10 GND.
11. PROVIDE 1"C - 4#8, 4#8 NEU, AND 4#10 GND.
12. PROVIDE PVC CONDUIT AT MINIMUM 18" BURIAL DEPTH.
13. PROVIDE PVC CONDUIT AT MINIMUM 24" BURIAL DEPTH.
14. PROVIDE 1"C - 2#8, 2#8 NEU, AND 2#10 GND.
15. PROVIDE 1"C - 1#8, 1#8 NEU, AND 1#10 GND.
16. SEE SHEET E0.8 FOR LIGHTING CONTROL PANEL SCHEDULE AND REQUIREMENTS.

REGISTERED PROFESSIONAL ENGINEER
KURT KAISER
No. E015151
Exp. 6-30-12
ELECTRICAL
STATE OF CALIFORNIA

DONN C. GILMORE & ASSOCIATES, INC.
Consulting Mechanical and Electrical Engineers
DCGA
4051 E. La Palma Ave., Ste. A
Anaheim, CA. 92807
Ph.: 714.630.4291
Fax: 714.630.4805

DATE	SYM	REVISION	BY	A'PD

NATIONAL AERONAUTICS AND SPACE ADMINISTRATION

DRYDEN FLIGHT RESEARCH CENTER
EDWARDS, CA

DRAWING TITLE

ELECTRICAL SITE PLAN

PROJECT TITLE

FACILITIES SUPPORT CENTER BUILDING
100% FINAL DESIGN SUBMITTAL

APPROVALS		DATE
Chief, Facilities Engineering & Asset Mgmt. Office DAN CROWLEY	David Crowley	4/14/11
Project Requestor /Customer DAN CROWLEY	David Crowley	4/14/11
Facilities Project Manager GEMMA FLORES	Gemma Flores	4/14/11
Chief, Office of Protective Services JOHN ZELLMER	[illegible]	04/14/11
Chief - Safety, Health, and Environmental Office DAN MULLEN	Daniel E. Mullen	4/14/11
DFRC Chief Information Officer KEN NORLIN	[illegible]	4/14/11

DATE STRTD	11/08/10	DATE PRNTD	03/14/11
DRAWN BY		EDM-1703	
SCALE	AS NOTED	TRADE SH. No.	E1.0
FILE NAME		SHEET No. 162 of 193	

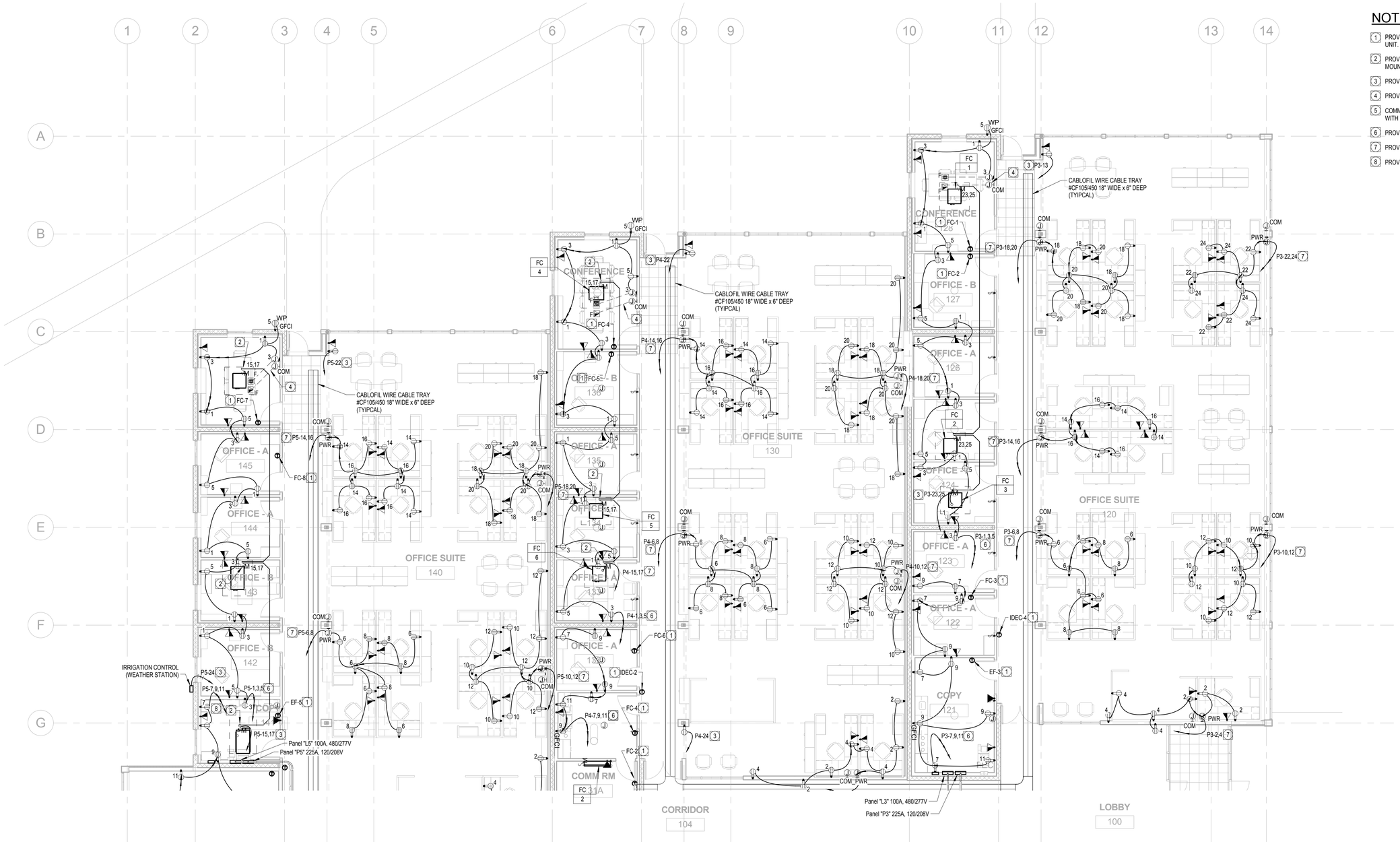

NOTES:

1. PROVIDE 1/2" CONDUIT, WITH PULL STRING, FROM THERMOSTAT TO ASSOCIATED MECHANICAL UNIT.
2. PROVIDE 208V, 2-POLE, FRACTIONAL HORSEPOWER MOTOR STARTER, WITH TOGGLE SWITCH, MOUNTED ADJACENT TO UNIT IN CEILING SPACE.
3. PROVIDE 3/4"C-2 #12, 1 #12 GND.
4. PROVIDE 2" CONDUIT TO CEILING SPACE WITH GROMMET END, AND TO FLOOR BOX.
5. COMMUNICATIONS ROOM BACKBOARD (3/4" THICK X 8' HIGH) TO BE INSTALLED ON FOUR WALLS WITH FIRE RESISTANT PAINT ON BOTH SIDES.
6. PROVIDE 3/4"C-4 #12, 1 #12 GND.
7. PROVIDE 3/4"C-3 #12, 1 #12 GND.
8. PROVIDE 3/4"C-3 #12, 2 #12 NEU, 1 #12 GND.

SCALE: 1/8" = 1'-0"

0 8 16 24 32

POWER AND SIGNAL PLAN - NORTH SEGMENT

SCALE: 1/8" = 1'-0"

REGISTERED PROFESSIONAL ENGINEER KURT KAISER No. E015151 Exp. 6-30-12 ELECTRICAL STATE OF CALIFORNIA

DONN C. GILMORE & ASSOCIATES, INC.
Consulting Mechanical and Electrical Engineers

DCGA

4051 E. La Palma Ave., Ste. A
Anaheim, CA 92807
Ph.: 714.630.4291
Fax: 714.630.4805

DATE	SYM	REVISION	BY	A'PD

NATIONAL AERONAUTICS AND SPACE ADMINISTRATION

DRYDEN FLIGHT RESEARCH CENTER
EDWARDS, CA

DRAWING TITLE

POWER AND SIGNAL - NORTH SEGMENT

PROJECT TITLE

FACILITIES SUPPORT CENTER BUILDING
100% FINAL DESIGN SUBMITTAL

APPROVALS	DATE
Chief, Facilities Engineering Division/Project Office DAN CROWLEY	4/14/11
Project Requestor /Customer DAN CROWLEY	4/14/11
Facilities Project Manager GEMMA FLORES	4/14/11
Chief, Office of Protective Services JOHN ZELLMER	4/14/11
Chief - Safety, Health, and Environmental Office DAN MULLEN	4/14/11
DFRC Chief Information Officer KEN NORLIN	4/14/11

DATE STRTD	11/08/10	DATE PRNTD	03/14/11
DRAWN BY		EDM-1703	
SCALE	AS NOTED	TRADE SH. No.	E2.1
FILE NAME		SHEET No. 163 of 193	

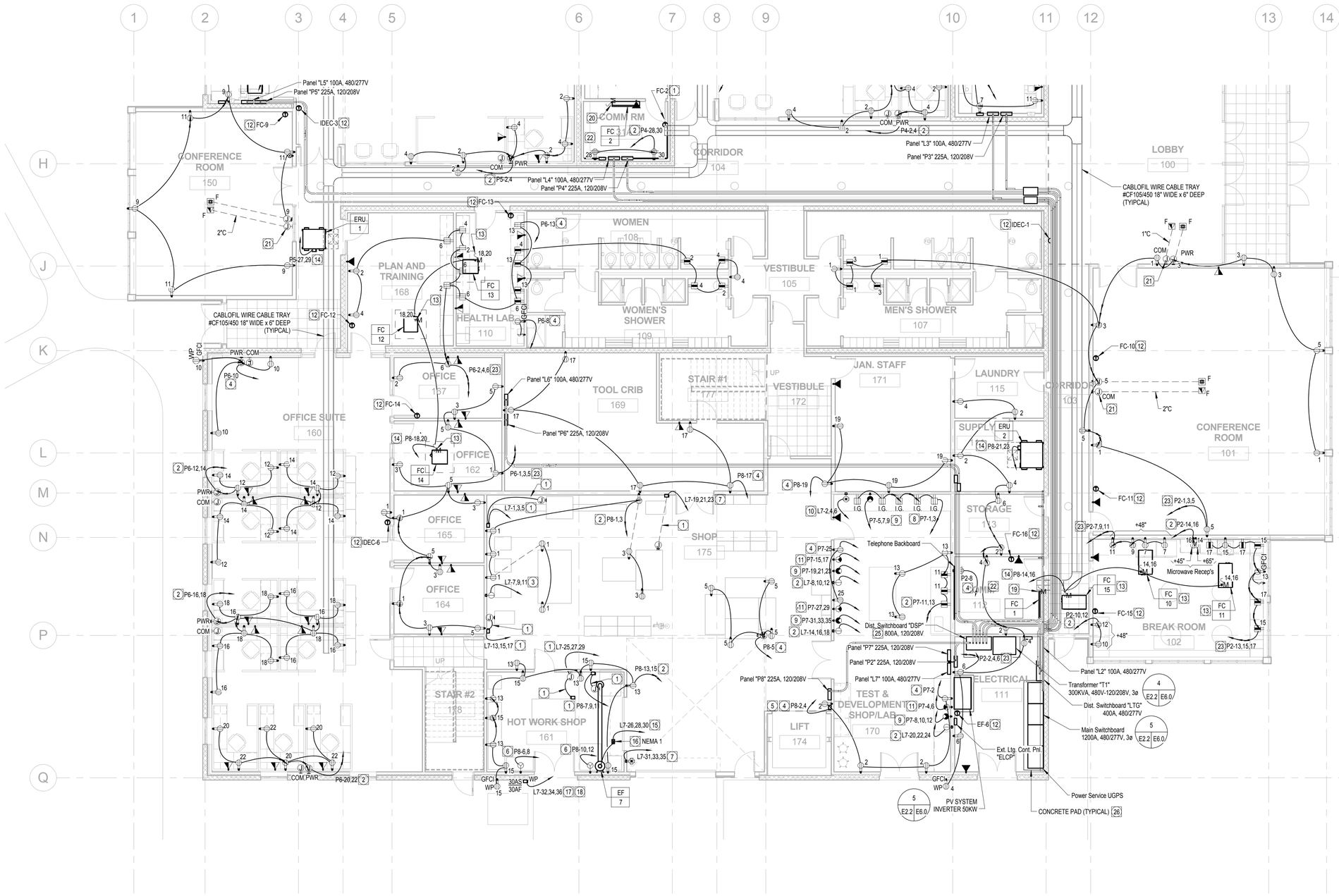

NOTES:

1. PROVIDE 3/4"C-3 #12, 1 #12 GND. TO 30A, 3-POLE SAFETY SWITCH WITH 15A FUSES. PROVIDE CIRCUIT CONTINUATION TO EQUIPMENT TERMINATION PER THE MANUFACTURER'S INSTRUCTIONS.
2. PROVIDE 3/4"C-3 #12, 1 #12 GND.
3. PROVIDE 3/4"C-3 #12, 1 #12 GND. TO NEMA L16-20R RECEPTAACLE.
4. PROVIDE 3/4"C-2 #12, 1 #12 GND.
5. PROVIDE CONTINUATION OF FEEDER CIRCUIT TO LIFT MOTOR TERMINALS PER MANUFACTURER'S INSTRUCTIONS.
6. PROVIDE 3/4"C-2 #6, 1 #10 GND. TO NEMA 6-50R RECEPTACLE.
7. PROVIDE 1 1/4"C-3 #4, 1 #10 GND. TO ARKTITE AREA6424 RECEPTACLE.
8. PROVIDE 3/4"C-2 #12, 1 #12 NEU, 1 #12 GND., 5 #12 ISO-GND.
9. PROVIDE 3/4"C-3 #10, 1 #10 GND.
10. PROVIDE 1"C-3 #4, 1 #10 GND.
11. PROVIDE 3/4"C-2 #10, 1 #10 GND.
12. PROVIDE 1/2"CONDUIT, WITH PULL STRING, FROM THERMOSTAT TO ASSOCIATED MECHANICAL UNIT.
13. PROVIDE 208V, 2-POLE, FRACTIONAL HORSEPOWER MOTOR STARTER, WITH TOGGLE SWITCH, MOUNTED ADJACENT TO UNIT IN CEILING SPACE.
14. PROVIDE 3/4"C-2 #12, 1 #12 GND.
15. PROVIDE 3/4"C-3 #12, 1 #12 GND.
16. PROVIDE COMBINATION MOTOR STARTER, RATED 480V, 3-HP, 3-PHASE, MOUNTED ADJACENT TO UNIT IN CEILING SPACE.
17. PROVIDE 3/4"C-3 #8, 1 #10 GND.
18. PROVIDE CONTINUATION OF FEEDER CIRCUIT TO UNIT TERMINATION WITH LAST 3 FEET (MAXIMUM) OF CONDUIT RUN AS LIQUID-TIGHT FLEXIBLE STEEL.
19. PROVIDE CONTINUATION FROM CU-1 ON ROOF AS 3/4"C-2 #10, 1 #10 GND. ON P2-17,19.
20. PROVIDE CONTINUATION FROM CU-2 ON ROOF AS 3/4"C-2 #10. 1 #10 GND. ON P4-27,29
21. PROVIDE 2" CONDUIT TO CEILING SPACE WITH GROMMET END, AND TO FLOOR BOX.
22. COMMUNICATIONS ROOM BACKBOARD (3/4" THICKx8' HIGH) TO BE INSTALLED ON FOUR WALLS WITH FIRE REAIATANT PAINT ON BOUTH SIDES.
23. PROVIDE 3/4"C-4 #12, 1 #12 GND.
24. PROVIDE 3/4"C-3 #12, 2 #12 NEU, 1 #12 GND.
25. SEE DETAIL #5 ON SHEET E6.0 FOR MOUNTING ANCHORAGE.
26. PROVIDE 4" CONCRETE HOUSEKEEPING PAD FOR ALL FLOOR MOUNTED EQUIPMENT ENCLOSURES.

SCALE: 1/8" = 1'-0"

0 8 16 24 32

POWER AND SIGNAL PLAN - SOUTH SEGMENT

SCALE: 1/8" = 1'-0"

REGISTERED PROFESSIONAL ENGINEER KURT KAISER No. E015151 Exp. 6-30-12 ELECTRICAL STATE OF CALIFORNIA

DONN C. GILMORE & ASSOCIATES, INC.
Consulting Mechanical and Electrical Engineers
DCGA
4051 E. La Palma Ave., Ste. A
Anaheim, CA 92807
Ph.: 714.630.4291
Fax: 714.630.4805

DATE	SYM	REVISION	BY	A'PD

NATIONAL AERONAUTICS AND SPACE ADMINISTRATION

DRYDEN FLIGHT RESEARCH CENTER
EDWARDS, CA

DRAWING TITLE

POWER AND SIGNAL - SOUTH SEGMENT

PROJECT TITLE

FACILITIES SUPPORT CENTER BUILDING
100% FINAL DESIGN SUBMITTAL

APPROVALS	DATE
Chief, Facilities Engineering Office / Asset Mgmt Office DAN CROWLEY	4/14/11
Project Requestor /Customer DAN CROWLEY	4/14/11
Facilities Project Manager GEMMA FLORES	4/14/11
Chief, Office of Protective Services JOHN ZELLMER	4/14/11
Chief - Safety, Health, and Environmental Office DAN MULLEN	4/14/11
DFRC Chief Information Officer KEN NORLIN	4/19/11

DATE STRTD	11/08/10	DATE PRNTD	03/14/11
DRAWN BY		EDM-1703	
SCALE	AS NOTED	TRADE SH. No.	E2.2
FILE NAME		SHEET No. 164 of 193	

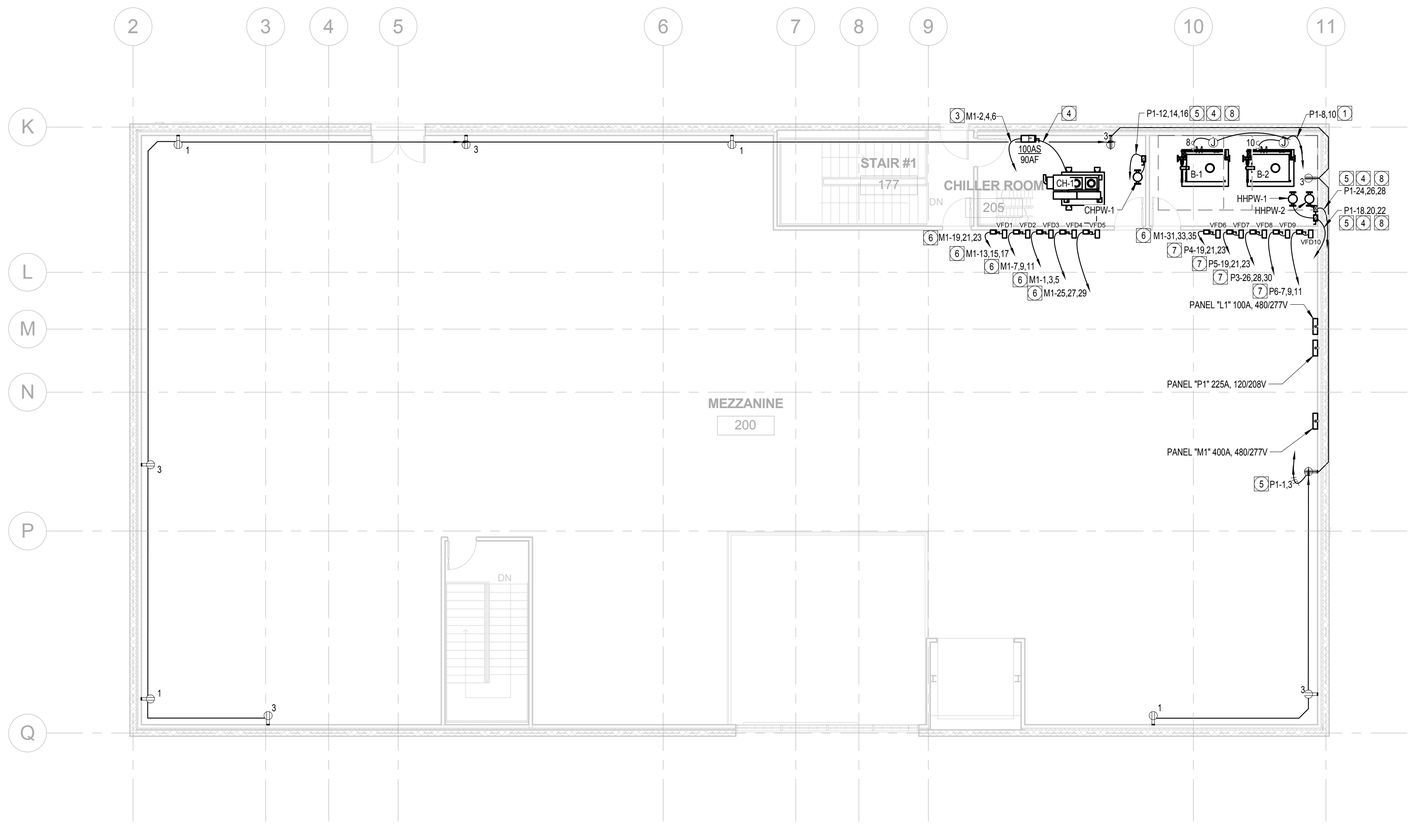

NOTES:

1. PROVIDE 3/4"C-2 #12, 1 #12 GND. ON CIRCUIT SPECIFIED.
2. PROVIDE CONTINUATION OF CIRCUIT SPECIFIED TO BOILER UNIT CONTROLS AND 1/3 HP RUNAROUND PUMP MOTOR STARTER. PROVIDE FRACTIONAL AND 1/3 HP RUNAROUND PUMP MOTOR STARTER. PROVIDE FRACTIONAL HORSEPOWER MOTOR STARTER MOUNTED ON UNIT AND CONTINUATION OF CIRCUIT TO MOTOR TERMINALS.
3. PROVIDE 1 1/2"C-3 #1/0, 1 #6 GND.
4. PROVIDE CONTINUATION OF FEEDER CIRCUIT TO UNIT CONTROL PANEL TERMINATION, WITH LIQUID-TIGHT FLEXIBLE STEEL CONDUIT ON LAST 3 FEET (MAXIMUM) OF RUN.
5. PROVIDE 3/4"C-3 #12, 1 #12 GND.
6. PROVIDE 3/4"C-3 #8, 1 #10 GND. ON SPECIFIED CIRCUIT AND CONTINUATION TO VFD TERMINATION PER MANUFACTURER'S INSTRUTIONS.
7. PROVIDE 3/4"C-3 #10, 1 #10 GND. ON SPECIFIED CIRCUIT AND CONTINUATION TO VFD TERMINATION PER MANUFACTURER'S INSTRUCTIONS.
8. PROVIDE NEMA SIZE 0 COMBINATION MOTOR STARTER WITH 30A, 3-POLE DISCONNECT SWITCH.

SCALE: 1/8" = 1'-0"

0 8 16 24 32

POWER AND SIGNAL MEZZANINE

SCALE: 1/8" = 1'-0"

REGISTERED PROFESSIONAL ENGINEER
KURT KAISER
No. E015151
Exp. 6-30-12
ELECTRICAL
STATE OF CALIFORNIA

DONN C. GILMORE & ASSOCIATES, INC.
Consulting Mechanical and Electrical Engineers
DCGA
4051 E. La Palma Ave., Ste. A
Anaheim, CA 92807
Ph.: 714.630.4291
Fax: 714.630.4805

DATE	SYM	REVISION	BY	A'PD

NATIONAL AERONAUTICS AND SPACE ADMINISTRATION
DRYDEN FLIGHT RESEARCH CENTER
EDWARDS, CA

DRAWING TITLE
POWER AND SIGNAL MEZZANINE

PROJECT TITLE
FACILITIES SUPPORT CENTER BUILDING
100% FINAL DESIGN SUBMITTAL

APPROVALS		DATE
Chief, Facilities Engineering & Asset Mgmt. Office DAN CROWLEY		4/14/11
Project Requestor /Customer DAN CROWLEY		4/14/11
Facilities Project Manager GEMMA FLORES		4/14/11
Chief, Office of Protective Services JOHN ZELLMER		14 April
Chief - Safety, Health, and Environmental Office DAN MULLEN		4/14/11
DFRC Chief Information Officer KEN NORLIN		4/14/11

DATE STRTD	11/08/10	DATE PRNTD	03/14/11
DRAWN BY			EDM-1703
SCALE	AS NOTED	TRADE SH. No.	
FILE NAME		E2.3	SHEET No. 165 of 193

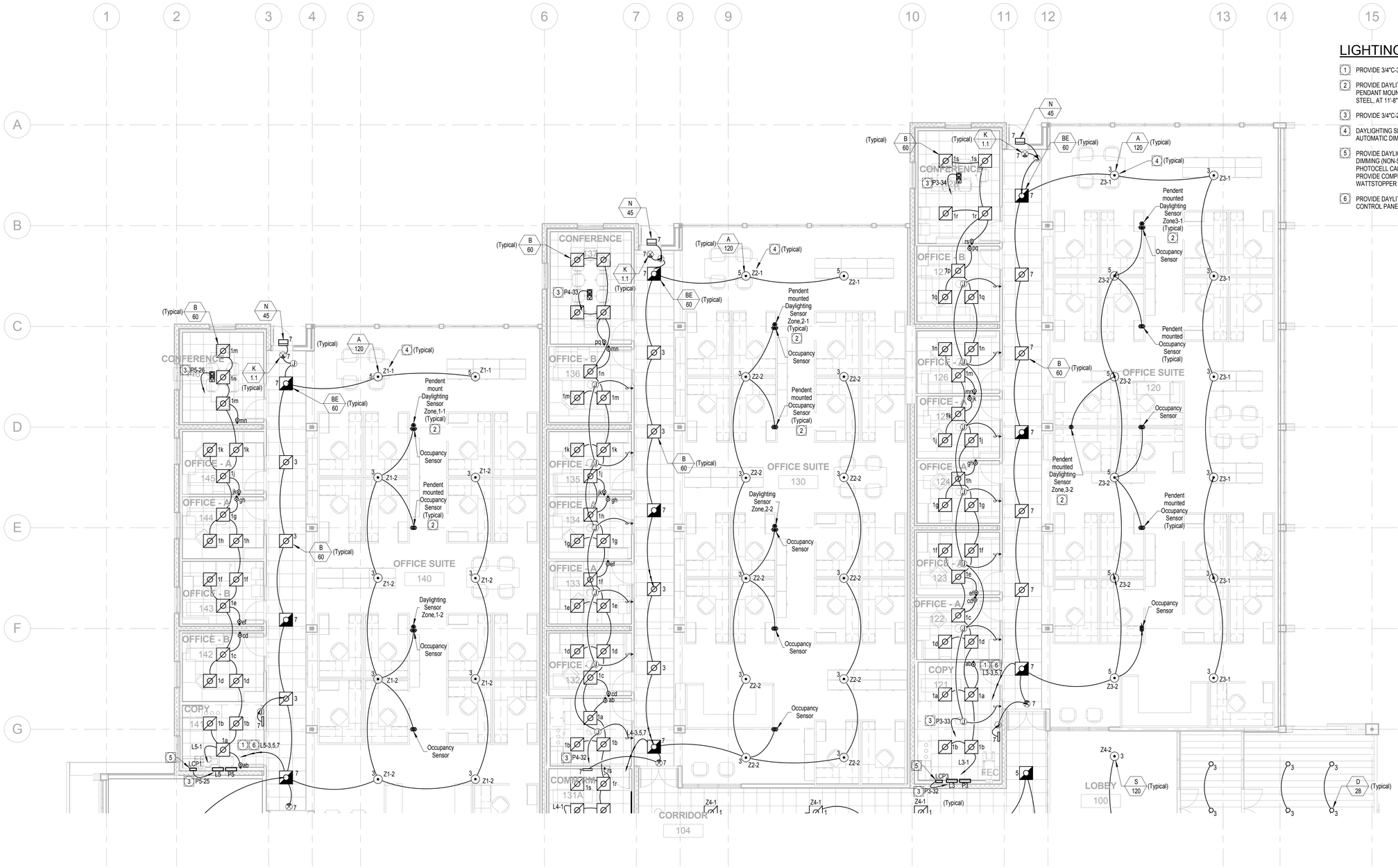

LIGHTING PLAN SPECIFIC NOTES:

1. PROVIDE 3/4"C-3 #12, 3 #12 NEU, 1 #12 GND.
2. PROVIDE DAYLIT ZONE PHOTOCELL AND/OR OCCUPANCY SENSOR PENDANT MOUNTED, USING ALL-THREAD ROD, FROM STRUCTURAL STEEL, AT 11'-8" ABOVE FINISHED FLOOR.
3. PROVIDE 3/4"C-2 #12, 1 #12 GND.
4. DAYLIGHTING SENSOR AND CONTROL ZONE SPECIFICATION FOR AUTOMATIC DIMMING CONTROL THROUGH LIGHTING CONTROL PANEL.
5. PROVIDE DAYLIGHT CONTROL PANEL WITH AUTOMATIC FULL RANGE DIMMING (NON-STEPPED) 0-10 VOLT CONTROL, AUTOMATIC PHOTOCELL CALIBRATION AND (2) 20A, 277A CIRCUIT PROVISIONS. PROVIDE COMPLETE CONTROL AND PHOTOSENSOR SYSTEM BY WATTSTOPPER OR APPROVED EQUAL.
6. PROVIDE DAYLIT AREA ZONE SPECIFIC CIRCUITS THROUGH LIGHTING CONTROL PANEL FOR AUTOMATIC DIMMING.

SCALE: 1/8" = 1'-0"

0 8 16 24 32

LIGHTING PLAN - NORTH SEGMENT

SCALE: 1/8" = 1'-0"

REGISTERED PROFESSIONAL ENGINEER KURT KAISER No. E015151 Exp. 6-30-12 ELECTRICAL STATE OF CALIFORNIA

DONN C. GILMORE & ASSOCIATES, INC.
Consulting Mechanical and Electrical Engineers
DCGA
4051 E. La Palma Ave., Ste. A
Anaheim, CA 92807
Ph.: 714.630.4291
Fax: 714.630.4805

DATE	SYM	REVISION	BY	A'PD

NATIONAL AERONAUTICS AND SPACE ADMINISTRATION

DRYDEN FLIGHT RESEARCH CENTER
EDWARDS, CA

DRAWING TITLE

LIGHTING PLAN - NORTH SEGMENT

PROJECT TITLE

FACILITIES SUPPORT CENTER BUILDING
100% FINAL DESIGN SUBMITTAL

APPROVALS	DATE
Chief, Facilities Engineering & Asset Mgmt Office DAN CROWLEY	4/14/11
Project Requestor /Customer DAN CROWLEY	4/14/11
Facilities Project Manager GEMMA FLORES	4/14/11
Chief, Office of Protective Services JOHN ZELLMER	4/14/11
Chief - Safety, Health, and Environmental Office DAN MULLEN	4/14/11
DFRC Chief Information Officer KEN NORLIN	4/14/11

DATE STRTD	11/08/10	DATE PRNTD	03/14/11
DRAWN BY		EDM-1703	
SCALE	AS NOTED	TRADE SH. No.	
FILE NAME		E3.1	SHEET No. 166 of 193

LIGHTING PLAN SPECIFIC NOTES:

1. PROVIDE 3/4"C-3 #12, 3 #12 NEU, 1 #12 GND.
2. PROVIDE DAYLIT ZONE PHOTOCELL ON T-BAR CEILING.
3. PROVIDE 3/4"C-2 #12, 1 #12 GND.
4. DAYLIGHTING SENSOR AND CONTROL ZONE SPECIFICATION FOR AUTOMATIC DIMMING CONTROL THROUGH LIGHTING CONTROL PANEL.
5. PROVIDE DAYLIGHT CONTROL PANEL WITH AUTOMATIC FULL RANGE DIMMING (NON-STEPPED) 0-10 VOLT CONTROL, AUTOMATIC PHOTOCELL CALIBRATION AND (2) 20A, 277A CIRCUIT PROVISIONS. PROVIDE COMPLETE CONTROL AND PHOTOSENSOR SYSTEM BY WATTSTOPPER OR APPROVED EQUAL.
6. PROVIDE DAYLIT AREA ZONE SPECIFIC CIRCUITS THROUGH LIGHTING CONTROL PANEL FOR AUTOMATIC DIMMING.
7. PROVIDE 3/4"C-4 #12, 1 #12 GND.

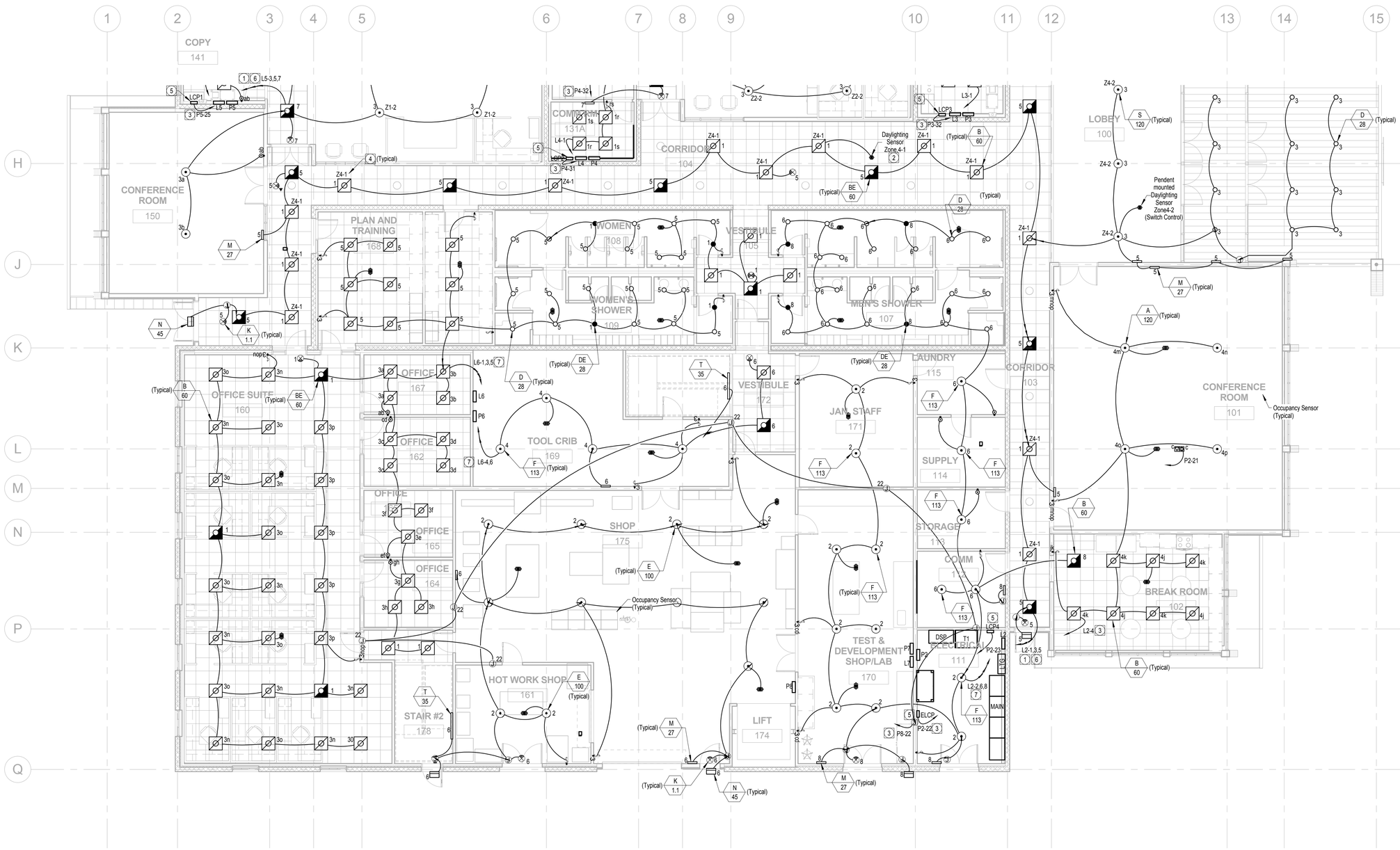

SCALE: 1/8" = 1'-0"

0 8 16 24 32

LIGHTING PLAN - SOUTH SEGMENT

SCALE: 1/8" = 1'-0"

REGISTERED PROFESSIONAL ENGINEER KURT KAISER No. E015151 Exp. 6-30-12 ELECTRICAL STATE OF CALIFORNIA

DONN C. GILMORE & ASSOCIATES, INC.
Consulting Mechanical and Electrical Engineers

DCGA

4051 E. La Palma Ave., Ste. A
Anaheim, CA 92807
Ph.: 714.630.4291
Fax: 714.630.4805

DATE	SYM	REVISION	BY	A'PD

NATIONAL AERONAUTICS AND SPACE ADMINISTRATION

DRYDEN FLIGHT RESEARCH CENTER
EDWARDS, CA

DRAWING TITLE

LIGHTING PLAN - SOUTH SEGMENT

PROJECT TITLE

FACILITIES SUPPORT CENTER BUILDING
100% FINAL DESIGN SUBMITTAL

APPROVALS	DATE
Chief, Facilities Engineering & Asset Mgmt. Office DAN CROWLEY	4/14/11
Project Requestor /Customer DAN CROWLEY	4/14/11
Facilities Project Manager GEMMA FLORES	4/14/11
Chief, Office of Protective Services JOHN ZELLMER	14 Apr 11
Chief - Safety, Health, and Environmental Office DAN MULLEN	4/14/11
DFRC Chief Information Officer KEN NORLIN	4/14/11

DATE STRTD	11/08/10	DATE PRNTD	03/14/11
DRAWN BY			EDM-1703
SCALE	AS NOTED	TRADE SH. No.	
FILE NAME		E3.2	SHEET No. 167 of 193

LIGHTING PLAN SPECIFIC NOTES:

1. PROVIDE 3/4"C-4 #12, 1 #12 GND.
2. PROVIDE 3/4"C-2 #12, 1 #12 GND.

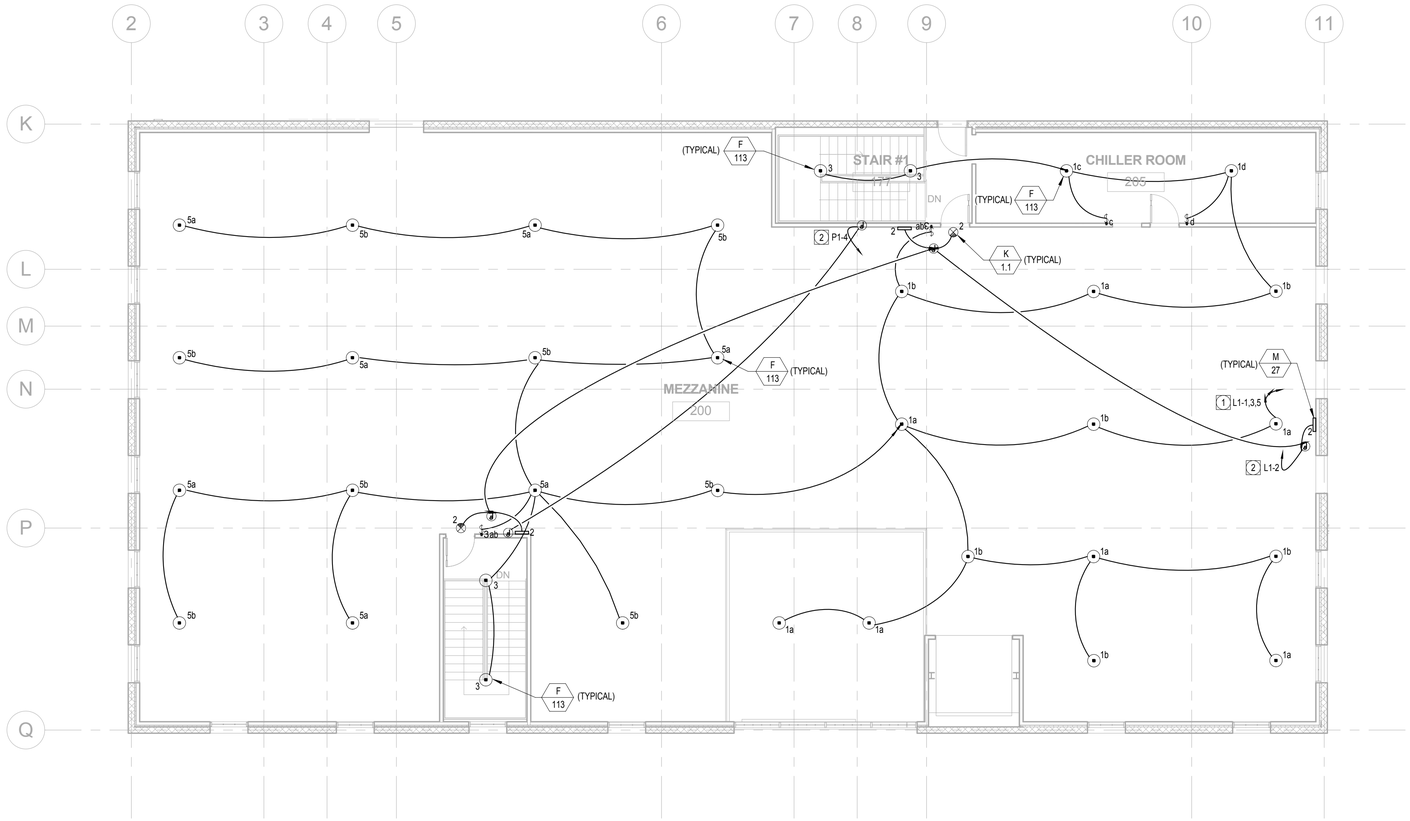

SCALE: 1/8" = 1'-0"

0 8 16 24 32

LIGHTING MEZZANINE

SCALE: 1/8" = 1'-0"

REGISTERED PROFESSIONAL ENGINEER
KURT KAISER
No. E015151
Exp. 6-30-12
ELECTRICAL
STATE OF CALIFORNIA

DONN C. GILMORE & ASSOCIATES, INC.
Consulting Mechanical and Electrical Engineers

DCGA

4051 E. La Palma Ave., Ste. A
Anaheim, CA. 92807
Ph.: 714.630.4291
Fax: 714.630.4805

DATE	SYM	REVISION	BY	A'PD

NATIONAL AERONAUTICS AND SPACE ADMINISTRATION

DRYDEN FLIGHT RESEARCH CENTER
EDWARDS, CA

DRAWING TITLE

LIGHTING MEZZANINE

PROJECT TITLE

FACILITIES SUPPORT CENTER BUILDING
100% FINAL DESIGN SUBMITTAL

APPROVALS	DATE
Chief, Facilities Engineering & Asset Mgmt. Office DAN CROWLEY	4/14/11
Project Requestor /Customer DAN CROWLEY	4/14/11
Facilities Project Manager GEMMA FLORES	4/14/11
Chief, Office of Protective Services JOHN ZELLMER	04/14/11
Chief - Safety, Health, and Environmental Office DAN MULLEN	4/14/11
DFRC Chief Information Officer KEN NORLIN	4/14/11

DATE STRTD	11/08/10	DATE PRNTD	03/14/11
DRAWN BY		EDM-1703	
SCALE	AS NOTED	TRADE SH. No. E3.3	
FILE NAME		SHEET No. 168 of 193	

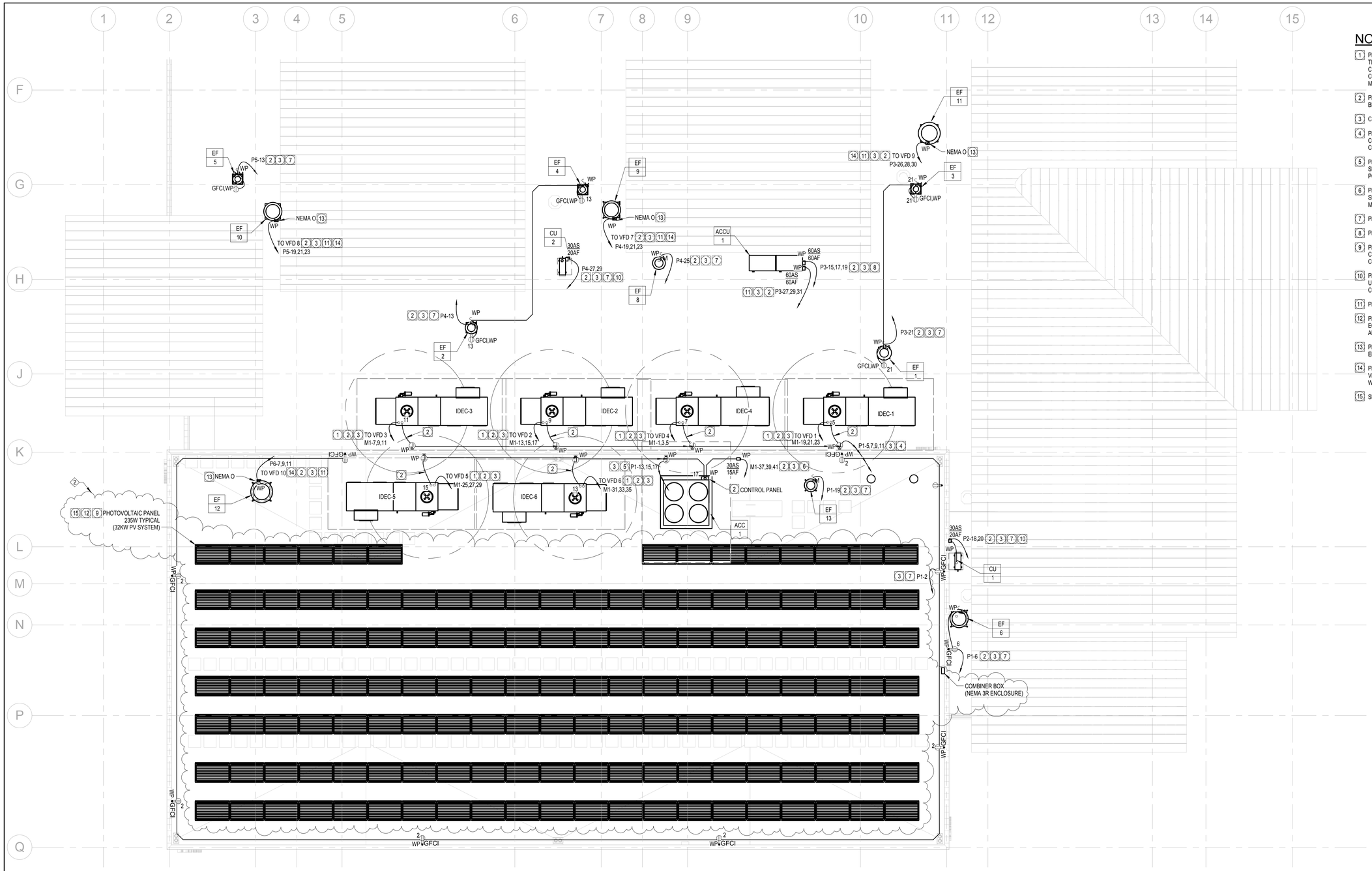

NOTES:

1. PROVIDE 3/4"C-3 #8, 1 #10 GND. TO SAFETY SWITCH PROVIDED WITH COOLING UNIT AND TERMINATE CONDUCTORS PER THE MANUFACTURER'S INSTRUCTIONS. PROVIDE SPECIFIED CIRCUIT FROM PANEL "M1" THROUGH UNIT ASSOCIATED VFD, MOUNTED IN MEZZANINE (200). COORDINATE VFD LOCATION, UNIT SPECIFICATION AND WIRING TERMINATION WITH MECHANICAL CONTRACTOR.
2. PROVIDE LIQUID-TIGHT FLEXIBLE STEEL CONDUIT ON LAST 3 FEET (MAXIMUM) OF RUN, BEFORE UNIT TERMINATION.
3. CIRCUIT CONDUCTORS DERATED FOR 122 DEGREES F AMBIENT.
4. PROVIDE 3/4"C-4 #10, 2 #10 NEU, 2 #10 GND. TO PANEL "P1" ON MEZZANINE. PROVIDE CONTINUATION OF SPECIFIED CIRCUIT TO 120V JUNCTION BOX, RPOVIDED WITH UNIT, FOR CONNECTION OF POWER FOR INTERIOR LIGHTS AND RECEPTACLES.
5. PROVIDE 3/4"C-4 #10, 1 #10 GND. TO PANEL "P1" ON MEZZANINE. PROVIDE CONTINUATION OF SPECIFIED CIRCUITS TO 120V JUNCTION BOX, PROVIDED WITH UNIT, FOR CONNECTION OF POWER FOR INTERIOR LIGHTS, RECEPTACLES, AND CONTROLS.
6. PROVIDE 3/4"C-3 #10, 1 #10 GND. TO PANEL "M1" ON MEZZANINE. PROVIDE CONTINUATION OF SPECIFIED CIRCUIT TO UNIT CONTROL PANEL AND TERMINATE WIRING PER MANUFACTURER'S INSTRUCTIONS.
7. PROVIDE 3/4"C-2 #10, 1 #10 GND.
8. PROVIDE 1 1/4"C-3 #3, 1 #8 GND.
9. PROVIDE PV PANELS MOUNTED AT 30 DEGREE SOUTHWARD TILT USING STRUCTURAL CHANNEL SYSTEM BOLTED TO ROOF DECK. PROVIDE UNIRAC SOLAR MOUNT SYSTEM COMPONENTS OR APPROVED EQUAL.
10. PROVIDE CONTINUATION OF FEEDER CIRCUIT, IN 3/4" CONDUIT TO ASSOCIATED FAN COIL UNIT (FC-16) IN COMMUNICATIONS ROOM 112, PER THE MANUFACTURERS INSTRUCTIONS. COORDINATE EQUIPMENT LOCATIONS WITH MECHANICAL INSTALLER.
11. PROVIDE 3/4"C-3 #10, 1 #10 GND.
12. PROVIDE PV PANEL MONTING SYSTEM AS COOPER B-LINE ARISTA SERIES (OR APPROVED EQUAL) WITH SOLAR ROOFTOP MOUNTING KIT, PANEL MOUNTING CLAMPS (MID AND END), AND SPLICE PLATES.
13. PROVIDE COMBINATION MOTOR STARTER. AS SPECIFIED, IN A WEATHER-PROOF ENCLOSURE.
14. PROVIDE SPECIFIED CIRCUIT FROM BREAKER PANEL THROUGH EXHAUST FAN ASSOCIATED VFD, MOUNTED IN MEZZANINE (200). COORDINATE VFD LOCATION, FAN SPECIFICATION AND WIRING TERMINATION WITH MECHANICAL CONTRACTOR.
15. SEE SOLAR PANEL SUPPORT DETAIL #12 ON STRUCTURAL SHEET S7.3, FOR MOUNTING.

SCALE: 1/8" = 1'-0"

0 8 16 24 32

POWER ROOF PLAN - SOUTH SEGMENT

SCALE: 1/8" = 1'-0"

REGISTERED PROFESSIONAL ENGINEER KURT KAISER No. E015151 Exp. 6-30-12 ELECTRICAL STATE OF CALIFORNIA

DONN C. GILMORE & ASSOCIATES, INC.
Consulting Mechanical and Electrical Engineers
DCGA
4051 E. La Palma Ave., Ste. A
Anaheim, CA 92807
Ph.: 714.630.4291
Fax: 714.630.4805

DATE	SYM	REVISION	BY	A'PD

NATIONAL AERONAUTICS AND SPACE ADMINISTRATION

DRYDEN FLIGHT RESEARCH CENTER
EDWARDS, CA

DRAWING TITLE

POWER ROOF PLAN

PROJECT TITLE

FACILITIES SUPPORT CENTER BUILDING
100% FINAL DESIGN SUBMITTAL

APPROVALS		DATE
Chief, Facilities Engineering & Asset Mgmt. Office DAN CROWLEY		4/14/11
Project Requestor /Customer DAN CROWLEY		4/14/11
Facilities Project Manager GEMMA FLORES		4/14/11
Chief, Office of Protective Services JOHN ZELLMER		4/14/11
Chief - Safety, Health, and Environmental Office DAN MULLEN		4/14/11
DFRC Chief Information Officer KEN NORLIN		4/14/11

DATE STRTD	11/08/10	DATE PRNTD	03/14/11
DRAWN BY			EDM-1703
SCALE	AS NOTED	TRADE SH. No.	
FILE NAME		E4.0	SHEET No. 169 of 193

UL/ SYSTEM NO. W-L-1054

METAL PIPE THROUGH 1-HR. OR 2-HR. GYPSUM WALL ASSEMBLY

F-RATING = 1-HR. OR 2-HR.
T-RATING = 0-HR.
L-RATING AT AMBIENT = LESS THAN 1 CFM/SQ. FT.
L-RATING AT 400°F = 4 CFM/SQ. FT.

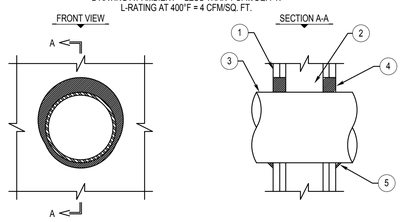

1. GYPSUM WALL ASSEMBLY (UL/ULC CLASSIFIED U300 OR U400 SERIES) (1-HR. OR 2-HR. FIRE-RATING) (2-HR. SHOWN).
2. (NOT SHOWN). WOOD STUDS TO CONSIST OF NOMINAL 2" x 4" LUMBER. STEEL STUDS TO BE MINIMUM 2-1/2" WIDE.
3. PENETRATING ITEM TO BE ONE OF THE FOLLOWING :
   A. MAXIMUM 30" DIAMETER STEEL PIPE (SCHEDULE 10 OR HEAVIER).
   B. MAXIMUM 30" DIAMETER CAST IRON PIPE.
   C. MAXIMUM 6" NOMINAL DIAMETER COPPER PIPE.
   D. MAXIMUM 6" NOMINAL DIAMETER STEEL CONDUIT.
   E. MAXIMUM 4" NOMINAL DIAMETER EMT.
4. HILTI FS-ONE HIGH PERFORMANCE INTUMESCENT FIRESTOP SEALANT :
   A. MINIMUM 5/8", FOR A 1-HR. FIRE-RATING.
   B. MINIMUM 1-1/4" DEPTH, FOR A 2-HR. FIRE-RATING.
5. MINIMUM 1/2" BEAD HILTI FS-ONE HIGH PERFORMANCE INTUMESCENT FIRESTOP SEALANT AT POINT OF CONTACT.

NOTES : 1. MAXIMUM DIAMETER OF OPENING :
A. 32-1/4" FOR STEEL STUD WALLS.
B. 14-1/2" FOR WOOD STUD WALLS.
2. ANNULAR SPACE = MINIMUM 0", MAXIMUM 2-1/2".

RATED WALL CONDUIT FIRE STOP DETAIL

SCALE: 12" = 1'-0" | 3 | E6.0

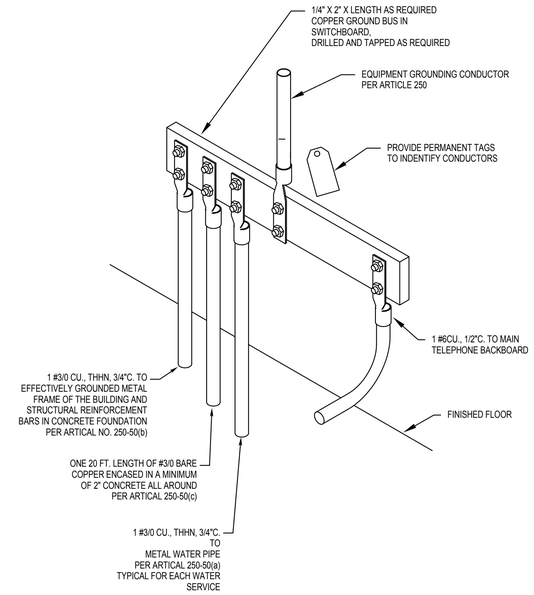

ELECTRICAL SERVICE GROUND DETAIL

SCALE: 12" = 1'-0" | 2 | E0.6 | E6.0

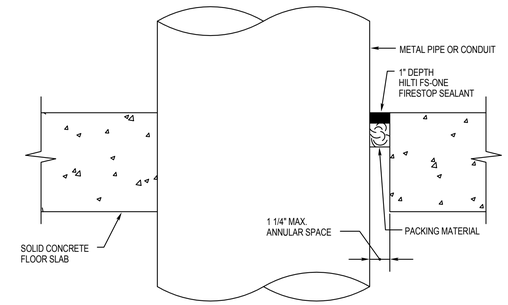

UL SYSTEM #CAJ1184

RATED FLOOR CONDUIT FIRE STOP DETAIL

SCALE: 12" = 1'-0" | 1 | E6.0

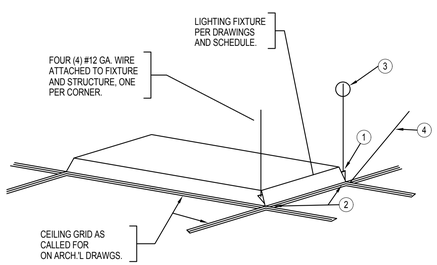

NOTES:

1. ATTACH WIRE TO FIXTURE (3 TIGHT TURNS MIN. IN 1 1/2" MAX.)
2. "TEK" SCREW GRID TO FIXTURE @ EACH CORNER.
3. ATTACH HANGER WIRES TO STRUCTURE AS PER STRUCTURAL & ARCHITECTURAL DETAILS.
4. CEILING SYSTEM SPLAY /HANGER WIRES AS OCCUR, SEE PLANS.

GRID RECESSED LIGHT FIXTURE DETAIL

SCALE: 12" = 1'-0" | 7 | E6.0

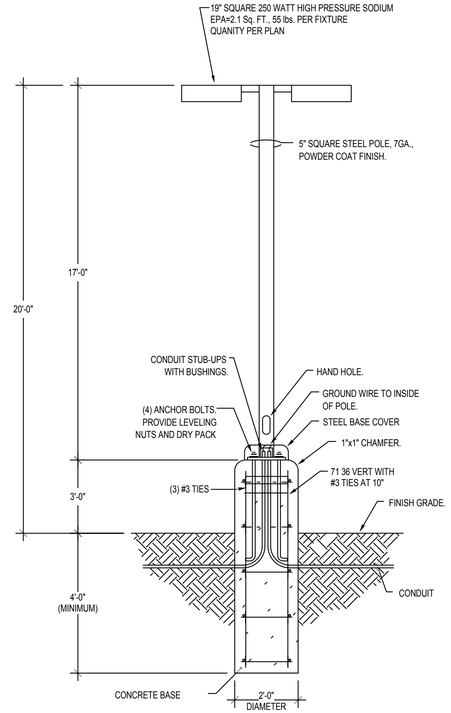

LIGHTING POLE DETAIL

SCALE: 12" = 1'-0" | 6 | E1.0 | E6.0

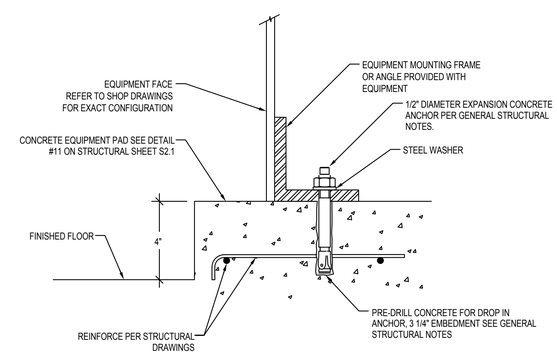

SWITCHBOARD/EQUIPMENT ANCHOR DETAIL

SCALE: 12" = 1'-0" | 5 | E2.2 | E6.0

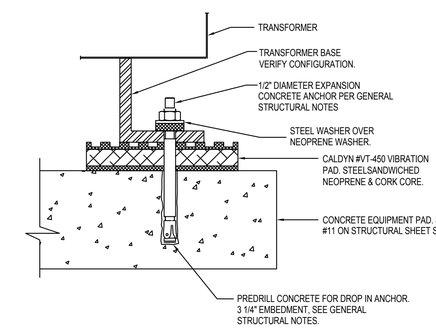

TRANSFORMER MOUNTING DETAIL

SCALE: 12" = 1'-0" | 4 | E2.2 | E6.0

REGISTERED PROFESSIONAL ENGINEER KURT KAISER No. E015151 Exp. 6-30-12 ELECTRICAL STATE OF CALIFORNIA

DONN C. GILMORE & ASSOCIATES, INC.
Consulting Mechanical and Electrical Engineers
DCGA
4051 E. La Palma Ave., Ste. A
Anaheim, CA 92807
Ph.: 714.630.4291
Fax: 714.630.4805

DATE	SYM	REVISION	BY	A'PD

NATIONAL AERONAUTICS AND SPACE ADMINISTRATION

DRYDEN FLIGHT RESEARCH CENTER
EDWARDS, CA

DRAWING TITLE

ELECTRICAL DETAILS

PROJECT TITLE

FACILITIES SUPPORT CENTER BUILDING
100% FINAL DESIGN SUBMITTAL

APPROVALS	DATE
Chief, Facilities Engineering & Asset Mgmt Office DAN CROWLEY	4/14/11
Project Requestor /Customer DAN CROWLEY	4/14/11
Facilities Project Manager GEMMA FLORES	4/14/11
Chief, Office of Protective Services JOHN ZELLMER	4/14/11
Chief - Safety, Health, and Environmental Office DAN MULLEN	4/14/11
DFRC Chief Information Officer KEN NORLIN	4/19/11

DATE STRTD	11/08/10	DATE PRNTD	03/14/11
DRAWN BY		EDM-1703	
SCALE	AS NOTED	TRADE SH. No.	
FILE NAME		E6.0	SHEET No. 170 of 193

DEMOLITION PLAN SPECIFIC NOTES:

1. BUILDING TO BE COMPLETELY DEMOLISHED. ELECTRICAL POWER AND LIGHTING EQUIPMENT TO BE DISCONNECTED, REMOVED AND DISPOSED OF (PER CONTRACTING OFFICER INSTRUCTIONS).
2. DE-ENEGISE AND DISCONNECT 480V FEEDER AT SUBSTATION 11, SERVING BUILDING 4810. FEEDER CONDUCTORS AND CONDUIT TO BE ABANDONED IN PLACE.
3. BUILDING ELECTRICAL SERVICE FEEDER TO BE DISCONNECTED AND ABANDONED, WITH CONDUIT, IN PLACE.
4. BUILDING TELEPHONE AND DATA COMMUNICATIONS LINES. DISCONNECT AND ABANDONED, WITH CONDUIT, PER CONTRACTING OFFICER APPROVAL INSTRUCTIONS

BLDG 4810, BLDG 4827, WELD SHOP DEMOLITION

SCALE: 1" = 30'-0"

1 E7.0

REGISTERED PROFESSIONAL ENGINEER
KURT KAISER
No. E015151
Exp. 6-30-12
ELECTRICAL
STATE OF CALIFORNIA

DONN C. GILMORE & ASSOCIATES, INC.
Consulting Mechanical and Electrical Engineers
DCGA
4051 E. La Palma Ave., Ste. A
Anaheim, CA 92807
Ph.: 714.630.4291
Fax: 714.630.4805

DATE	SYM	REVISION	BY	A'PD

NATIONAL AERONAUTICS AND SPACE ADMINISTRATION
DRYDEN FLIGHT RESEARCH CENTER
EDWARDS, CA

DRAWING TITLE
BLDG 4810, BLDG 4827, WELD SHOP DEMOLITION

PROJECT TITLE
FACILITIES SUPPORT CENTER BUILDING
100% FINAL DESIGN SUBMITTAL

APPROVALS	DATE
Chief, Facilities Engineering & Asset Mgmt. Office DAN CROWLEY	4/14/11
Project Requestor /Customer DAN CROWLEY	4/14/11
Facilities Project Manager GEMMA FLORES	4/14/11
Chief, Office of Protective Services JOHN ZELLMER	14 April
Chief - Safety, Health, and Environmental Office DAN MULLEN	4/14/11
DFRC Chief Information Officer KEN NORLIN	4/14/11

DATE STRTD	11/08/10	DATE PRNTD	03/14/11
DRAWN BY			EDM-1703
SCALE	AS NOTED	TRADE SH. No.	
FILE NAME		E7.0	SHEET No. 171 of 193

LIGHTING CONTROL SYSTEM SPECIFICATIONS:

1. THE LIGHTING CONTROL DEVICES AND EQUIPMENT SHALL BE CERTIFIED BY THE CALFORNIA ENERGY COMMISSION. ALL COMPONENTS OF THE LIGHTING CONTROL SYSTEM SHALL BE MANUFACTURED BY A SINGLE MANUFACTURER. THE ENTIRE SYSTEM SHALL BE COVERED BY A ONE YEAR WARRANTY.

2. THE RELAY PANELS SHALL FACTORY PRE-ASSEMBLED AND UL LISTED. PROVIDE COMPLETE WITH ALL REQUIRED CONTROL TRANSFORMERS, AND REQUIRED VOLTAGE BARRIERS. WHEN DESIGNATED AS SURFACE MOUNTING PROVIDE A SCREW-ON COVER. WHEN DESIGNATED AS FLUSH MOUNTING PROVIDE A HINGED DOOR ASSEMBLY.

3. LIGHTING CONTROL RELAYS SHALL BE FULL LOAD RELAYS SUITABLE FOR ALL TYPES OF LAMP LOADS UP TO 20 AMPERES AT 347 VAC. LOAD CONTACTS SHALL BE ABLE TO SUSTAIN 1500 AMP FAULT CURRENTS FOR UP TO 20 MILLISECONDS. THE RELAY SHALL BE CONTAINED IN A MOLDED CASE CONTAINING BOTH HIGH AND LOW VOLTAGE TERMINALS AND SHALL HAVE A BUILT-IN OPERATING LEVER MARKED ON / OFF FOR MANUAL SWITCHING AT THE RELAY PANEL.

4. THE "CONTROLLER" SHALL ALLOW FOR AUXILIARY INPUT OF A MAINTAINED OR A MOMENTARY PULSE.

   THE PROGRAMMING OF THE "CONTROLLER" SHALL BE USER FRIENDLY WITH ALL NECESSARY INSTRUCTIONS PRINTED ON THE "CONTROLLER" LABEL. NO AUXILIARY INSTRUCTION MANUALS SHALL BE REQUIRED.

   THE MASTER RELAY PANEL SHALL CONTAIN A TIMECLOCK WITH THE FOLLOWING FEATURES: SEVEN DAY / HOLIDAY CONTROL, 8 OUTPUT CHANNELS, FOUR EVENTS PER DAY, FIVE YEAR MEMORY FOR PROGRAMMING, 24 HOUR MEMORY FOR THE CLOCK, AND OUTPUTS RATED AT 100 MILLI-AMPS.

5. THE PHOTOMETRIC SENSOR SHALL BE CAPABLE OF SENSING LIGHT LEVEL CHANGES AS FOLLOWS: 1 TO 10, 1 TO 100, 1 TO 1000, AND 1 TO 10,000 FOOT CANDLES.

6. SHOP DRAWINGS SHALL BE SUBMITTED PER THE GENERAL SPECIFICATION REQUIREMENTS SHOWING ALL COMPONENTS, WIRING CONFIGURATIONS AND PROGRAMMING SCHEDULES.

LIGHTING CONTROL SYSTEM REQUIREMENTS:

1. THE CONTRACTOR SHALL BE RESPONSIBLE FOR THE FURNISHING OF ALL FINAL DESIGN, AGENCY APPROVALS, PLAN CHECK FEES, LABOR, EQUIPMENT, MATERIALS, AND PERFORMANCE OF OPERATIONS IN CONNECTION WITH THE INSTALLATION OF A COMPLETE AND FULLY FUNCTIONING CODE APPROVED LOW VOLTAGE LIGHTING CONTROL SYSTEM.

2. IT IS THE INTENT OF THE CONTRACT DOCUMENTS, WHICH ARE PRESENTED IN A DIAGRAMMATIC, "DESIGN-BUILD" FORMAT, FOR THE CONTRACTOR TO DESIGN, PROVIDE AND INSTALL A COMPLETE AND FULLY FUNCTIONING, CODE APPROVED LOW VOLTAGE LIGHTING CONTROL SYSTEM.

3. IT SHALL BE THE RESPONSIBILITY OF THE CONTRACTOR TO PROVIDE ALL MATERIAL AND EQUIPMENT WHICH IS USUALLY FURNISHED WITH SUCH SYSTEMS, IN ORDER TO PROVIDE A COMPLETE AND FULLY FUNCTIONING INSTALLATION, WHETHER MENTIONED HEREIN OR NOT.

LIGHTING CONTROL SYSTEM PLAN NOTES:

1. LIGHTING CONTROL PANEL. SEE PLANS FOR EXACT LOCATION. REFER TO LIGHTING CONTROL PANEL SCHEDULE FOR MORE INFORMATION.

2. PHOTOCELL MOUNTED AT EXTERIOR ROOFTOP LOCATION FACING NORTH.

3. PROVIDE 3/4"CONDUIT MINIMUM, OR LARGER AS REQUIRED WITH QUANTITY AND TYPE OF CONDUCTORS PER MANUFACTURER'S RECOMMENDATIONS.

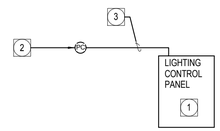

SITE LIGHTING CONTROL PANEL ELCP

MOUNTING: SURFACE | PHOTOCELL: YES | COMPUTER SYSTEM: NO | NETWORK TYPE: NO

PANEL#	CKT#	RELAY	DESCRIPTION	LOCAL SWITCH	MASTER SWITCH	ZONE NUMBER	MISCELLANEOUS
L2	7	1	SITE LTG	N/A	N/A	1	277V RELAY
L2	9	2	SITE LTG	N/A	N/A	2	277V RELAY
L2	11	3	SITE LTG	N/A	N/A	3	277V RELAY
-	-	4	-	N/A	N/A	-	277V RELAY (SPARE)
-	-	5	-	N/A	N/A	-	277V RELAY (SPARE)
-	-	6	-	N/A	N/A	-	277V RELAY (SPARE)
-	-	7	-	N/A	N/A	-	277V RELAY (SPARE)
-	-	8	-	-	-	-	277V RELAY (SPARE)

ZONE NUMBER	TIME		PHOTO		DESCRIPTION	ZONE NUMBER	TIME		PHOTO		DESCRIPTION
	ON	OFF	ON	OFF			ON	OFF	ON	OFF	
1	-	TBD	DUSK	-	PHOTO CELL	-	-	-	-	-	-
2	-	TBD	DUSK	-	PHOTO CELL	-	-	-	-	-	-
3	-	TBD	DUSK	-	PHOTO CELL	-	-	-	-	-	-
-	-	-	-	-	-	-	-	-	-	-	-

REGISTERED PROFESSIONAL ENGINEER
KURT KAISER
No. E015151
Exp. 6-30-12
ELECTRICAL
STATE OF CALIFORNIA

DONN C. GILMORE & ASSOCIATES, INC.
Consulting Mechanical and Electrical Engineers
DCGA
4051 E. La Palma Ave., Ste. A
Anaheim, CA 92807
Ph.: 714.630.4291
Fax: 714.630.4805

DATE	SYM	REVISION	BY	A'PD

NATIONAL AERONAUTICS AND SPACE ADMINISTRATION

DRYDEN FLIGHT RESEARCH CENTER
EDWARDS, CA

DRAWING TITLE

LIGHTING CONTROL PANEL AND NOTES

PROJECT TITLE

FACILITIES SUPPORT CENTER BUILDING
100% FINAL DESIGN SUBMITTAL

APPROVALS	DATE
Chief, Facilities Engineering Division Office DAN CROWLEY	4/14/11
Project Requestor /Customer DAN CROWLEY	4/14/11
Facilities Project Manager GEMMA FLORES	4/14/11
Chief, Office of Protective Services JOHN ZELLMER	4/14/11
Chief - Safety, Health, and Environmental Office DAN MULLEN	4/14/11
DFRC Chief Information Officer KEN NORLIN	4/14/11

DATE STRTD	11/08/10	DATE PRNTD	03/14/11
DRAWN BY		EDM-1703	
SCALE	AS NOTED	TRADE SH. No.	
FILE NAME		E8.0	SHEET No. 172 of 193

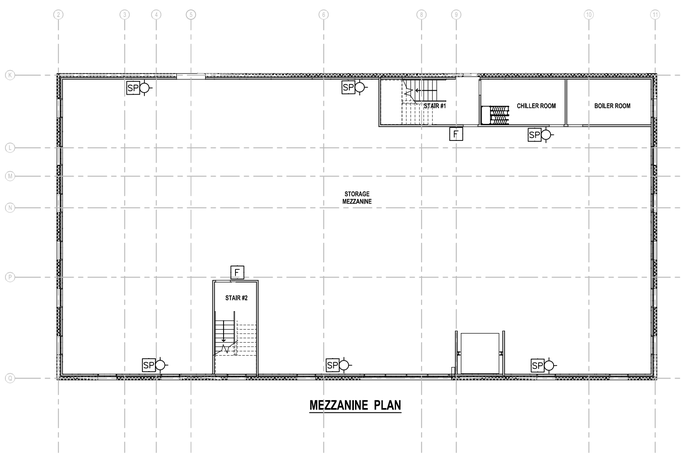

MEZZANINE PLAN

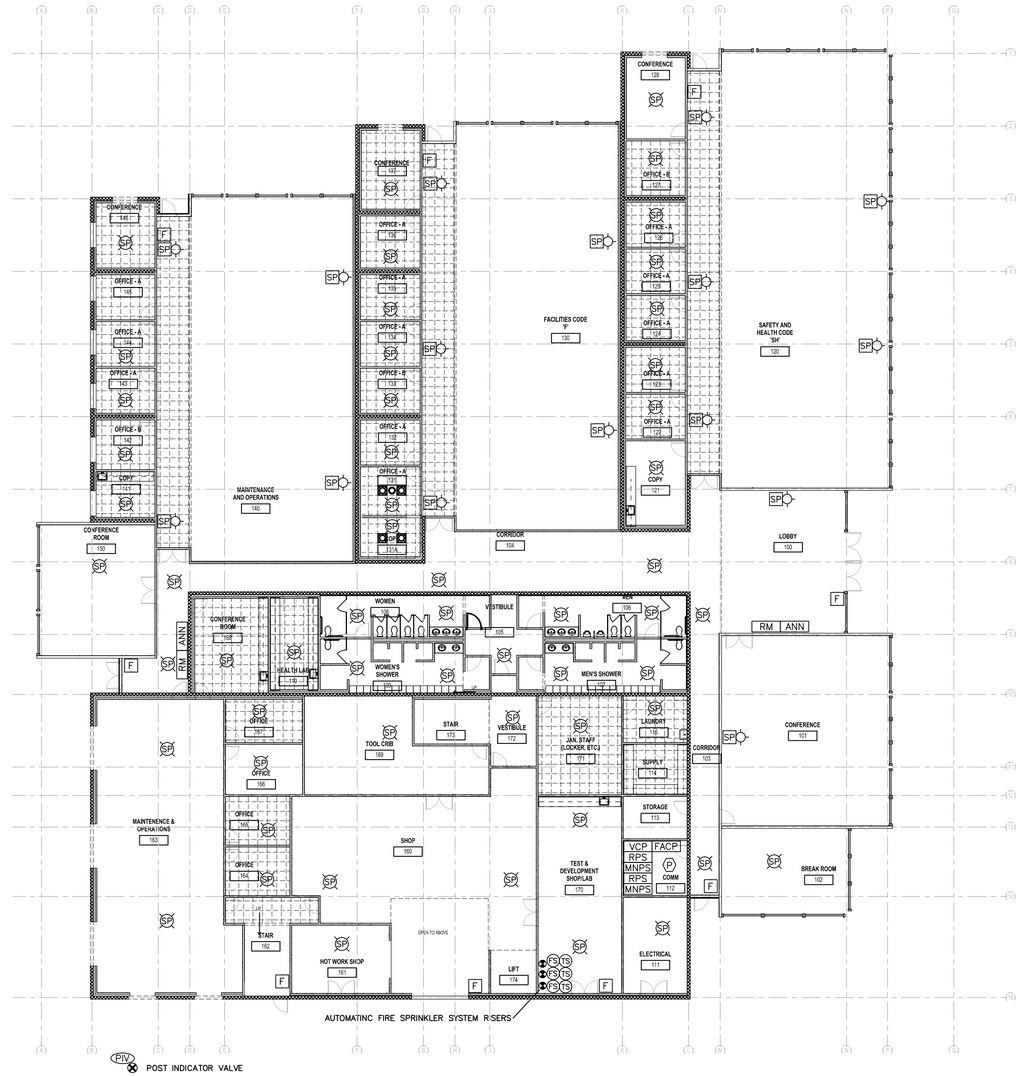

SCALE: 1/16" = 1'-0" | 1

FIRE ALARM SYSTEM NOTES:

1. FIRE ALARM AND MASS NOTIFICATION SYSTEMS SHALL BE DESIGNED AND INSTALLED IN ACCORDANCE WITH NFPA 72 2007 EDITION, NFPA 101 2009 EDITION. UFGS DIVISION 28, SECTIONS 31 64.00 10 & 31 76 AND NASA-STD-8719.11 REVISION A.
2. ALL DEVICES AND EQUIPMENT SHALL BE UL LISTED OR FM APPROVED.
3. DEVICES ARE SHOWN IN SUGGESTED LOCATIONS. FINAL QUANTITY AND LAYOUT SHALL BE IN ACCORDANCE WITH APPLICABLE CODES, MANUFACTURER'S RECOMMENDATIONS AND EQUIPMENT LISTINGS.
4. CONDUITS AND RACEWAYS IN FINISHED AREAS SHALL BE CONCEALED FROM VIEW.
5. SMOKE DETECTORS SHALL BE LOCATED NO CLOSER THAN 914 MM FROM ALL AIR DIFFUSERS.
6. ALL FIRE ALARM CONDUIT SHALL BE 21 MM MINIMUM.
7. SIGNALING LINE CIRCUITS SHALL BE CLASS B, STYLE 4; INITIATING DEVICE CIRCUITS SHALL BE CLASS B, STYLE B; NOTIFICATION APPLIANCE CIRCUITS SHALL BE CLASS A, STYLE Z.
8. SYNCHRONIZE ALL VISUAL AND AUDIBLE NOTIFICATION APPLIANCES.
9. ALL FIRE ALARM CONDUCTORS SHALL BE INSTALLED IN CONDUIT.
10. ALL FIRE ALARM CONDUIT SHALL BE PAINTED RED.

SYMBOL LEGEND

DEVICE LEGEND

SYMBOL	DEVICE	PART NUMBER
ANN	FIRE ALARM ANNUNCIATOR	
FACP	FIRE ALARM CONTROL PANEL	
FS	FLOW SWITCH	BY OTHERS
F	MANUAL PULL STATION	
MNPS	MASS NOTIFICATION REMOTE POWER SUPPLY	
P	PHOTOELECTRIC DETECTOR/BASE	
PIV	POST INDICATING VALVE	BY OTHERS
RM	REMOTE MICROPHONE	
SP	SPEAKER/STROBE-CEILING MOUNTED	
SP	SPEAKER/STROBE-WALL MOUNTED	
TS	TAMPER SWITCH	BY OTHERS
VCP	VOICE CONTROL PANEL	
RPS	REMOTE POWER SUPPLY	

REGISTERED PROFESSIONAL ENGINEER
DONALD J. MUDRY
No. FP 5042
Exp. 6-30-11
FIRE PROTECTION
STATE OF CALIFORNIA

MUDRY & ASSOCIATES
Fire Protection Engineering, Consulting and Design
12752 Valley View Street, Suite D
Garden Grove, California 92845
(714) 373-5741
Fax (714) 373-5781
e-mail: fpe@mudry.us

DATE	SYM	REVISION	BY	A'PD

NATIONAL AERONAUTICS AND SPACE ADMINISTRATION
DRYDEN FLIGHT RESEARCH CENTER
EDWARDS, CA

DRAWING TITLE
FIRE ALARM PLAN

PROJECT TITLE
FACILITIES SUPPORT CENTER BUILDING
100% FINAL DESIGN SUBMITTAL

APPROVALS	DATE
Chief, Facilities Engineering & Asset Mgmt. Office DAN CROWLEY	4/14/11
Project Requestor/Customer DAN CROWLEY	4/14/11
Facilities Project Manager GEMMA FLORES	4/14/11
Chief, Office of Protective Services JOHN ZELLMER	4/14/11
Chief – Safety, Health and Environmental Office DAN MULLEN	4/14/11
DFRC Chief Information Officer KEN NORLIN	4/14/11

DATE STRTD	11/04/10	DATE PRNTD	03/14/11
DRAWN BY	RJM		EDM-1703
SCALE		TRADE SH. No.	
FILE NAME		FA0.1	SHEET No. 173 of 193

DRAWING SHEET INDEX			
SHEET NUMBER	DESCRIPTION	REVISION #	REVISION DATE
FA0.0	COVER SHEET		
FA0.1	DRAWING INDEX, GENERAL NOTES, FIRE ALARM SYSTEM MATRIX		
FA1.1	FIRE ALARM PLAN – PARTIAL FIRST FLOOR		
FA1.2	FIRE ALARM PLAN – PARTIAL FIRST FLOOR		
FA1.3	FIRE ALARM PLAN – MEZZANINE		
FA2.1	FIRE ALARM RISER DIAGRAM		
FA2.2	FIRE ALARM RISER DIAGRAM		
FA3.1	FIRE ALARM CONTROL PANEL (CABINET #1) WIRING DIAGRAM – NODE 1		
FA3.2	FIRE ALARM CONTROL PANEL (CABINET #2) WIRING DIAGRAM – NODE 1		
FA3.3	LOC PANEL WIRING DIAGRAM		
FA3.4	FIRE ALARM POWER SUPPLY WIRING DIAGRAM		
FA3.5	MASS NOTIFICATION POWER SUPPLY WIRING DIAGRAMS		
FA4.1	DEVICE WIRING DETAILS		
FA4.2	DEVICE WIRING DETAILS		

WIRE LEGEND			
DESIGNATION	CIRCUIT TYPE	WIRE TYPE	CIRCUIT STYLE/CLASS
A	SIGNALING LINE CIRCUIT (SLC LOOP)	2#16 TWISTED/UNSHIELDED	STYLE 7, CLASS A
C	STROBE CIRCUIT	2#12 AWG	CLASS A
D	24 VDC POWER	2#16 AWG	
E	INITIATING DEVICE CIRCUIT	2#16 AWG	CLASS A
H	ANNUNCIATOR DATA CIRCUIT	2#16 TWISTED/SHIELDED	
J	24 VDC ANNUNCIATOR POWER	2#16 AWG	
L	LOW LEVEL (12V PTP) AUDIO RISER	2#16 TWISTED/SHIELDED	
MN	MASS NOTIFICATION STROBE CIRCUIT	2#14 AWG	CLASS A
N	NETWORK CIRCUIT	2#18 TWISTED/UNSHIELDED	STYLE 7, CLASS A
P	DIGITAL AUDIO LOOP (DAL)	BELDEN 5320UJ (18 AWG)	STYLE 7, CLASS A
S	SYNCHRONIZATION CIRCUIT	2#16 AWG	CLASS A
V	SPEAKER CIRCUIT	2#16 TWISTED/SHIELDED	CLASS A

NOTES:

1. ALL FIRE ALARM WIRING MUST BE IN STRICT COMPLIANCE WITH APPLICABLE SECTIONS OF THE NATIONAL ELECTRICAL CODE (ARTICLE 760) AND ALL APPLICABLE NFPA STANDARDS.
2. INSTALLATION MUST COMPLY WITH NASA–STD–8719.11A , NFPA 72 (2007 EDITION) NFPA 70 (2008 EDITION), NFPA 24 AND ALL APPLICABLE FEDERAL, STATE, OR LOCAL LAWS, REGULATIONS, CODES, AND SPECIFICATIONS.
3. ALL INSTALLATION MUST BE APPROVED BY THE LOCAL AUTHORITY HAVING JURISDICTION.
4. TO AVOID CONTAMINATION AND DUST ACCUMULATION IN THE SMOKE DETECTORS, IT IS RECOMMENDED THAT THE SMOKE DETECTORS NOT BE INSTALLED UNTIL AFTER CONSTRUCTION IS COMPLETED AND THE SUBJECT AREA HAS BEEN CLEANED. THE SUPPLIER IS NOT RESPONSIBLE FOR DUST ACCUMULATION IN SMOKE DETECTORS AND WILL NOT WARRANTY DEVICES THAT HAVE NOT BEEN PROPERLY MAINTAINED. WHEN DETECTORS ARE INSTALLED, PROTECTIVE COVERS SHALL BE INSTALLED OVER EACH DETECTOR AND REMOVED BY AUTHORIZED SERVICE PERSONNEL.
5. AS INSTRUCTED IN NFPA 70, PROVIDE A SYSTEM GROUND FOR EARTH DETECTION AND LIGHTNING PROTECTION OF THE DEVICES.
6. ALL FIRE ALARM SYSTEM WIRING SHALL BE CLEAR FROM SHORTS, OPENS AND GROUNDS.
7. WHERE CONDUCTORS ARE RUN IN CONDUIT, USE ONLY APPROVED CABLE WITHIN RACEWAYS, PIPES, OR CONDUITS. ALL SHIELDED WIRE MUST BE CONTINUOUS THROUGHOUT CIRCUIT, ALL SHIELDS SHALL BE ISOLATED FROM GROUND, ALL SHIELDS SHALL TERMINATE AT THE FIRE ALARM CONTROL PANEL (FACP) ONLY.
8. CONDUIT AND JUNCTION BOX LOCATIONS ARE DIAGRAMMATIC ONLY, EXACT LOCATIONS MAY VARY DUE TO FIELD CONDITIONS. ACTUAL INSTALLATION LOCATIONS SHALL BE DETERMINED BY THE INSTALLING CONTRACTOR.
9. DO NOT LOCATE SMOKE DETECTORS WITHIN 3 FEET OF SUPPLY AIR VENTS.
10. SIGNALING CIRCUIT WIRE RUNS ARE CRITICAL. ANY INCREASE IN LENGTH OF WIRE MAY AFFECT CIRCUIT CONFIGURATIONS.
11. PROVIDE CLASS A WIRING PER NFPA 72 SUCH THAT THE OUTGOING AND RETURN CONDUCTORS, EXITING FROM AND RETURNING TO THE CONTROL UNIT RESPECTIVELY, ARE ROUTED IN SEPARATE CONDUITS. CLASS A CONDUIT RUNS SHALL BE SEPARATED BY A MINIMUM OF 4'–0" ON HORIZONTAL RUNS AND 1'–0" ON VERTICAL RUNS. REDUNDANT CIRCUIT CONDUCTORS ARE PERMITTED TO BE RUN IN THE SAME CABLE ASSEMBLY, ENCLOSURE OR RACEWAY AS FOLLOWS:
    A. FOR A DISTANCE NOT TO EXCEED 10 FEET WHERE THE OUTGOING AND RETURN CONDUCTORS ENTER OR EXIT A DEVICE, APPLIANCE OR CONTROL UNIT ENCLOSURE.
    B. SINGLE CONDUIT/RACEWAY DROPS TO INDIVIDUAL DEVICES OR APPLIANCES.
    C. SINGLE CONDUIT/RACEWAY DROPS TO MULTIPLE DEVICES OR APPLIANCES INSTALLED WITHIN A SINGLE ROOM NOT TO EXCEED 1000 SQ. FEET IN AREA
12. WIRE NUTS SHAL NOT BE USED ON CONDUCTORS. ONLY TERMINAL STRIPS SHALL BE USED.
13. ALL FIRE ALARM CONDUITS SHALL BE PAINTED RED.

SYSTEM NOTES:

1. TO 120 VAC DEDICATED BRANCH CIRCUIT
2. MONITOR PIV TAMPER SWITCH
3. VERIFY LOCATION WITH OWNER'S REP'S

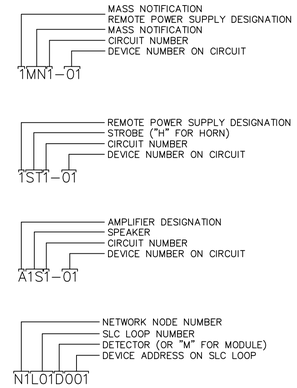

ADDRESS LABEL CLARIFICATION

DEVICE LEGEND			
QTY	SYMBOL	DEVICE	PART NUMBER
2	C	CONTROL MODULE	
1	ANN	FIRE ALARM ANNUNCIATOR	
1	FACP	FIRE ALARM CONTROL PANEL	
3	FS	FLOW SWITCH	BY OTHERS
3	I	ISOLATOR MODULE	
AS REQ'D	J	JUNCTION BOX	BY OTHERS
11	F	MANUAL PULL STATION	
2	MNPS	MASS NOTIFICATION REMOTE POWER SUPPLY	
17	M	MONITOR MODULE	
2	P	PHOTOELECTRIC DETECTOR/BASE	
1	PIV	POST INDICATING VALVE	BY OTHERS
1	PRN	PRINTER	
1	R	RELAY MODULE	
2	RM	REMOTE MICROPHONE	
2	RPS	REMOTE POWER SUPPLY	
58	SP	SPEAKER/STROBE–CEILING MOUNTED	
22	SP	SPEAKER/STROBE–WALL MOUNTED	
19	A	STROBE LIGHT–CEILING MOUNTED, MASS NOTIFICATION	(FUTURE)
22	A	STROBE LIGHT–WALL MOUNTED, AMBER	(FUTURE)
1	SS HV	SURGE SUPPRESSOR – HIGH VOLTAGE	
1	SS LV	SURGE SUPPRESSOR – LOW VOLTAGE	
3	TS	TAMPER SWITCH	BY OTHERS
1	VCP	VOICE CONTROL PANEL	
10	D	FIRE OR SMOKE DAMPER	BY OTHERS
6	DD	DUCT SMOKE DETECTOR	BY OTHERS

FIRE ALARM SYSTEM OPERATION MATRIX																
SYSTEM INPUTS	ACTIVATE COMMON ALARM SIGNAL INDICATOR	ACTIVATE AUDIBLE VOICE ALARM SIGNAL	ACTIVATE COMMON SUPERVISORY SIGNAL INDICATOR	ACTIVATE AUDIBLE SUPERVISORY SIGNAL	ACTIVATE COMMON TROUBLE SIGNAL INDICATOR	ACTIVATE AUDIBLE COMMON TROUBLE SIGNAL	ACTIVATE ZONE ALARM INDICATOR	ACTIVATE EVACUATION MESSAGE/ STROBES	DISPLAY/PRINT CHANGE OF STATUS	TRANSMIT FIRE ALARM SIGNAL TO SUPERVISING STATION	TRANSMIT SUPERVISORY SIGNAL TO SUPERVISING STATION	TRANSMIT TROUBLE SIGNAL TO SUPERVISING STATION	ACTIVATE MASS NOTIFICATION MESSAGE	TRANSMIT WATER FLOW ALARM TO SUPERVISING STATION	ACTIVATE MASS NOTIFICATION AMBER STROBES	ACTIVATE MASS NOTIFICATION SIGNAL TO SUPERVISING STATION	ACTIVATE LOCAL/REMOTE LED INDICATORS
SMOKE DETECTOR	●	●						●	●	●							●
THERMAL DETECTORS	●	●						●		●							●
PULL STATIONS	●	●					●	●	●	●							●
MASS NOTIFICATION ACTIVATION (FUTURE)	●												●		●	●	
LOOP OPEN/SHORT CIRCUIT					●	●			●			●					
LOOP GROUND FAULT					●	●			●			●					
LOOP FAILURE					●	●			●			●					
NAC OPEN/SHORT CIRCUIT					●	●			●			●					
NAC GROUND FAULT					●	●			●			●					
NAC FAILURE					●	●			●			●					
LOSS OF AC POWER					●	●			●								
LOSS OF AC POWER (>8 HR)					●	●			●			●					
BATTERY/CHARGER FAILURE					●	●			●			●					
LOW BATTERY					●	●			●			●					
SPRINKLER WATER FLOW	●	●					●	●	●	●				●			
SPRINKLER TAMPER SWITCHES			●	●					●		●						
FIRE AND SMOKE DAMPERS					●	●			●			●					
DUCT SMOKE DETECTOR					●	●			●			●					●

REGISTERED PROFESSIONAL ENGINEER
RONALD J. MUDRY
No. FP 1500
Exp. 6-30-11
FIRE PROTECTION
STATE OF CALIFORNIA

MUDRY & ASSOCIATES
Fire Protection Engineering, Consulting and Design
12752 Valley View Street, Suite D
Garden Grove, California 92845
(714) 373-5741
Fax (714) 373-5781
e-mail: fpe@mudry.us

DATE	SYM	REVISION	BY	A'PD

NATIONAL AERONAUTICS AND SPACE ADMINISTRATION
DRYDEN FLIGHT RESEARCH CENTER
EDWARDS, CA

DRAWING TITLE
DRAWING SHEET LIST, NOTES, LEGENDS, FIRE ALARM SYSTEM OPERATION MATRIX

PROJECT TITLE
FACILITIES SUPPORT CENTER BUILDING
100% FINAL DESIGN SUBMITTAL

APPROVALS	DATE
Chief, Facilities Engineering & Asset Mgmt. Office DAN CROWLEY	4/14/11
Project Requestor/Customer DAN CROWLEY	4/14/11
Facilities Project Manager GEMMA FLORES	4/14/11
Chief, Office of Protective Services JOHN ZELLMER	4/14/11
Chief – Safety, Health and Environmental Office DAN MULLEN	4/14/11
DFRC Chief Information Officer KEN NORUN	4/14/11

DATE STRTD	11/04/10	DATE PRNTD	03/14/11
DRAWN BY	HMO	EDM–1703	
SCALE	AS INDICATED	TRADE SK. No.	
FILE NAME	FA0.2	SHEET No. 174 of 193	

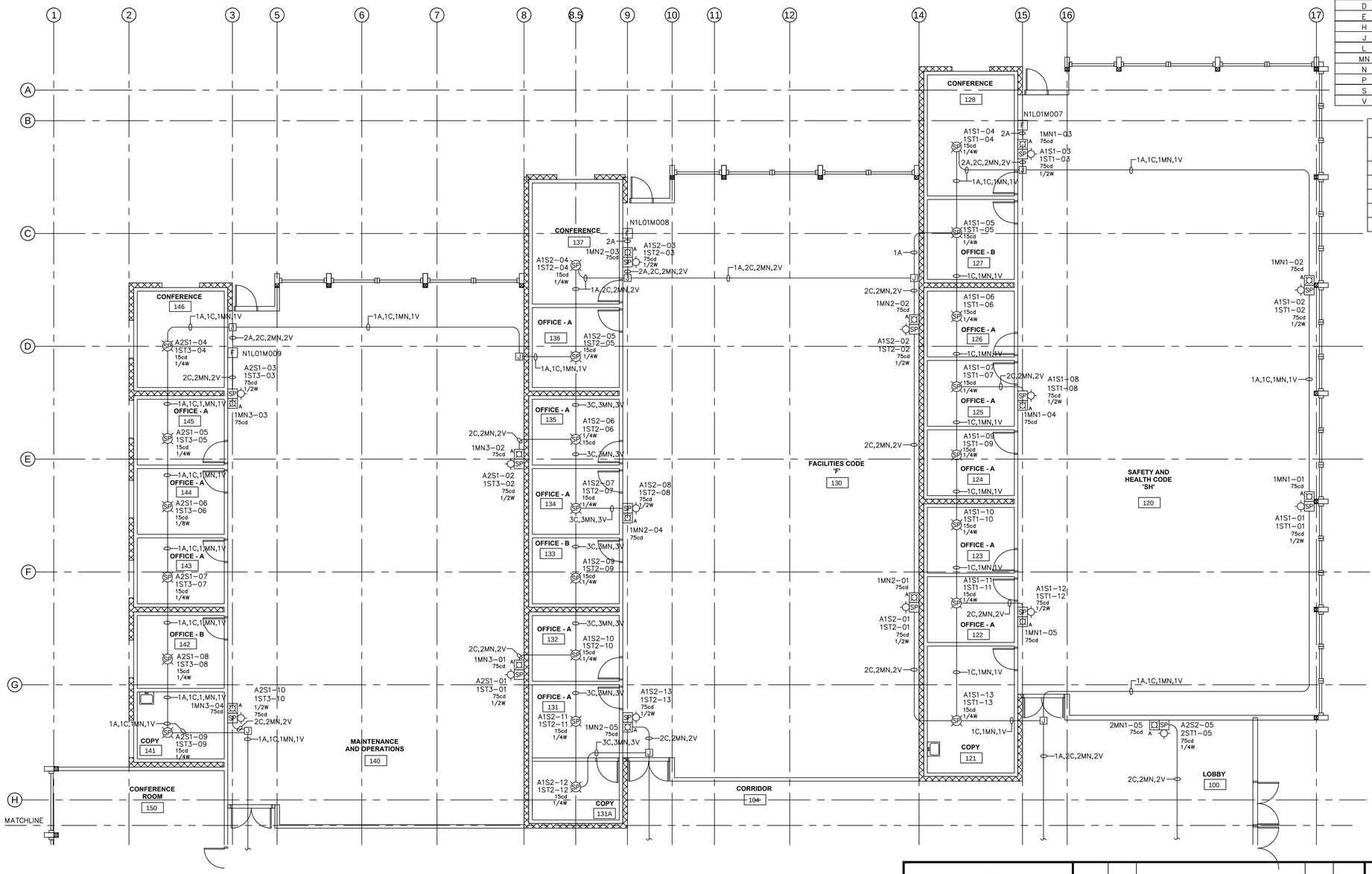

WIRE LEGEND			
DESIGNATION	CIRCUIT TYPE	WIRE TYPE	CIRCUIT STYLE/CLASS
A	SIGNALING LINE CIRCUIT (SLC LOOP)	2#16 TWISTED/UNSHIELDED	STYLE 7, CLASS A
C	STROBE CIRCUIT	2#12 AWG	CLASS A
D	24 VDC POWER	2#16 AWG	
E	INITIATING DEVICE CIRCUIT	2#16 AWG	CLASS A
H	ANNUNCIATOR DATA CIRCUIT	2#16 TWISTED/SHIELDED	
J	24 VDC ANNUNCIATOR POWER	2#16 AWG	
L	LOW LEVEL (12V PTP) AUDIO RISER	2#16 TWISTED/SHIELDED	
MN	MASS NOTIFICATION STROBE CIRCUIT	2#14 AWG	CLASS A
N	NETWORK CIRCUIT	2#18 TWISTED/UNSHIELDED	STYLE 7, CLASS A
P	DIGITAL AUDIO LOOP (DAL)	BELDEN 5320UJ (18 AWG)	STYLE 7, CLASS A
S	SYNCHRONIZATION CIRCUIT	2#16 AWG	CLASS A
V	SPEAKER CIRCUIT	2#16 TWISTED/SHIELDED	CLASS A

DEVICE LEGEND			
QTY	SYMBOL	DEVICE	PART NUMBER
AS REQ'D	J	JUNCTION BOX	
3	F	MANUAL PULL STATION	
22	SP	SPEAKER/STROBE-CEILING MOUNTED	
15	SP	SPEAKER/STROBE-WALL MOUNTED	
15	A	STROBE LIGHT-WALL MOUNTED, AMBER	

SYSTEM NOTES:

1. TO 120 VAC DEDICATED BRANCH CIRCUIT
2. MONITOR PIV TAMPER SWITCH
3. VERIFY LOCATION WITH OWNER'S REP'S

1MN1-01
- MASS NOTIFICATION
- REMOTE POWER SUPPLY DESIGNATION
- MASS NOTIFICATION
- CIRCUIT NUMBER
- DEVICE NUMBER ON CIRCUIT

1ST1-01
- REMOTE POWER SUPPLY DESIGNATION
- STROBE ("H" FOR HORN)
- CIRCUIT NUMBER
- DEVICE NUMBER ON CIRCUIT

A1S1-01
- AMPLIFIER DESIGNATION
- SPEAKER
- CIRCUIT NUMBER
- DEVICE NUMBER ON CIRCUIT

N1L01D001
- NETWORK NODE NUMBER
- SLC LOOP NUMBER
- DETECTOR (OR "M" FOR MODULE)
- DEVICE ADDRESS ON SLC LOOP

ADDRESS LABEL CLARIFICATION

N

FIRE ALARM FLOOR PLAN – FIRST FLOOR – NORTH

SCALE: 1/8"=1'-0"

0 4 8 16 32

REGISTERED PROFESSIONAL ENGINEER RONALD J. MUDRY No. FP 150 Exp. 6-30-11 FIRE PROTECTION STATE OF CALIFORNIA

MUDRY & ASSOCIATES
Fire Protection Engineering, Consulting and Design
12752 Valley View Street, Suite D
Garden Grove, California 92845
(714) 373-5741
Fax (714) 373-5781
e-mail: fpe@mudry.us

DATE	SYM	REVISION	BY	A'PD

NATIONAL AERONAUTICS AND SPACE ADMINISTRATION
DRYDEN FLIGHT RESEARCH CENTER
EDWARDS, CA

DRAWING TITLE
FIRE ALARM FLOOR PLAN
FIRST FLOOR – NORTH

PROJECT TITLE
FACILITIES SUPPORT CENTER BUILDING
100% FINAL DESIGN SUBMITTAL

APPROVALS		DATE
Chief, Facilities Engineering & Asset Mgmt. Office DAN CROMLEY		4/14/11
Project Requestor/Customer DAN CROMLEY		4/14/11
Facilities Project Manager GEMMA FLORES		4/14/11
Chief, Office of Protective Services JOHN ZELLMER		4/14/11
Chief – Safety, Health and Environmental Office DAN MULLEN		4/14/11
DFRC Chief Information Officer KEN NORLIN		4/14/11

DATE STRTD	11/04/10	DATE PRNTD	03/14/11
DRAWN BY	HMO	EDM-1703	
SCALE	AS INDICATED	TRADE SK. No.	
FILE NAME		FA1.1	SHEET No. 175 of 193

WIRE LEGEND			
DESIGNATION	CIRCUIT TYPE	WIRE TYPE	CIRCUIT STYLE/CLASS
A	SIGNALING LINE CIRCUIT (SLC LOOP)	2#16 TWISTED/UNSHIELDED	STYLE 7, CLASS A
C	STROBE CIRCUIT	2#12 AWG	CLASS A
D	24 VDC POWER	2#16 AWG	
E	INITIATING DEVICE CIRCUIT	2#16 AWG	CLASS A
H	ANNUNCIATOR DATA CIRCUIT	2#16 TWISTED/SHIELDED	
J	24 VDC ANNUNCIATOR POWER	2#16 AWG	
L	LOW LEVEL (12V PTP) AUDIO RISER	2#16 TWISTED/SHIELDED	
MN	MASS NOTIFICATION STROBE CIRCUIT	2#14 AWG	CLASS A
N	NETWORK CIRCUIT	2#18 TWISTED/UNSHIELDED	STYLE 7, CLASS A
P	DIGITAL AUDIO LOOP (DAL)	BELDEN 5320UJ (18 AWG)	STYLE 7, CLASS A
S	SYNCHRONIZATION CIRCUIT	2#16 AWG	CLASS A
V	SPEAKER CIRCUIT	2#16 TWISTED/SHIELDED	CLASS A

DEVICE LEGEND			
QTY	SYMBOL	DEVICE	PART NUMBER
2	C	CONTROL MODULE	
2	ANN	FIRE ALARM ANNUNCIATOR	
1	FACP	FIRE ALARM CONTROL PANEL	
3	FS	FLOW SWITCH	BY OTHERS
3	I	ISOLATOR MODULE	
AS REQ'D	J	JUNCTION BOX	
6	F	MANUAL PULL STATION	
2	MNPS	MASS NOTIFICATION REMOTE POWER SUPPLY	(FUTURE)
15	M	MONITOR MODULE	
2	P	PHOTOELECTRIC DETECTOR/BASE	
1	PRN	PRINTER	
1	R	RELAY MODULE	
2	RM	REMOTE MICROPHONE	
2	RPS	REMOTE POWER SUPPLY	
36	SP	SPEAKER/STROBE-CEILING MOUNTED	
1	SP	SPEAKER/STROBE-WALL MOUNTED	
19	A	STROBE LIGHT-CEILING MOUNTED, MASS NOTIFICATION	(FUTURE)
1	A	STROBE LIGHT-WALL MOUNTED, AMBER	(FUTURE)
1	SS HV	SURGE SUPPRESSOR – HIGH VOLTAGE	
3	TS	TAMPER SWITCH	BY OTHERS
1	VCP	VOICE CONTROL PANEL	
1	PIV	POST INDICATING VALVE	BY OTHERS
1	SS LV	SURGE SUPPRESSOR – LOW VOLTAGE	
8	D	FIRE OR SMOKE DAMPER	BY OTHERS
4	DD	DUCT SMOKE DETECTOR	BY OTHERS

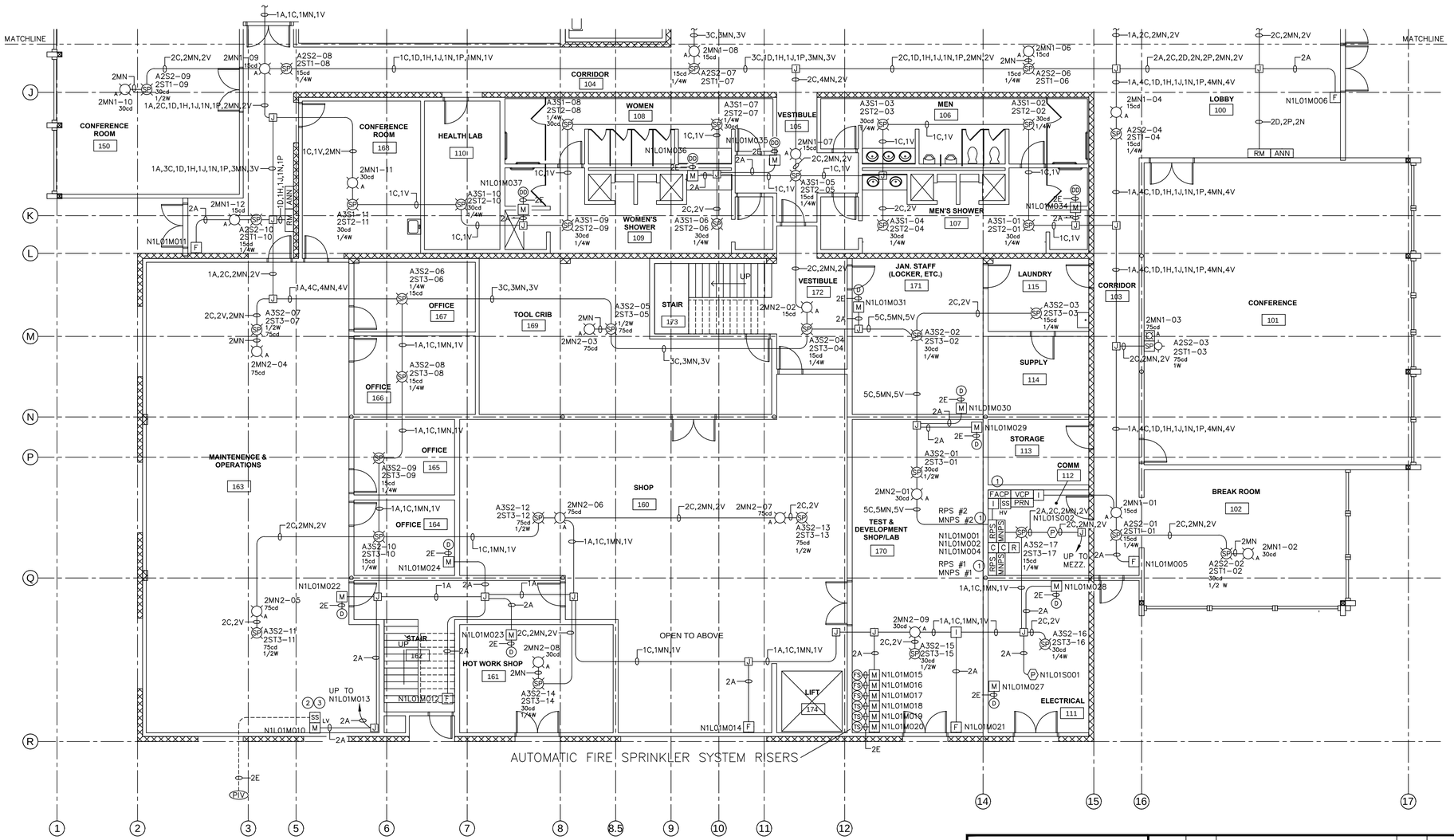

SYSTEM NOTES:

1. TO 120 VAC DEDICATED BRANCH CIRCUIT
2. MONITOR PIV TAMPER SWITCH
3. VERIFY LOCATION WITH OWNER'S REP'S

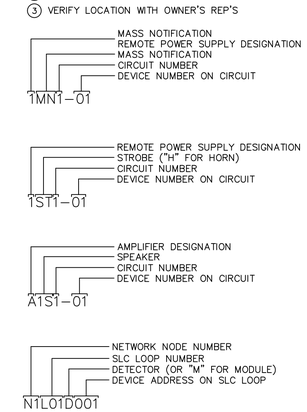

ADDRESS LABEL CLARIFICATION

N

FIRE ALARM FLOOR PLAN – FIRST FLOOR – SOUTH

SCALE: 1/8"=1'-0"

0 4 8 16 32

REGISTERED PROFESSIONAL ENGINEER DONALD J. MUDRY No. 19 Exp. 6-30-11 FIRE PROTECTION STATE OF CALIFORNIA

MUDRY & ASSOCIATES
Fire Protection Engineering, Consulting and Design
12752 Valley View Street, Suite D
Garden Grove, California 92845
(714) 373-5741
Fax (714) 373-5781
e-mail: fpe@mudry.us

DATE	SYM	REVISION	BY	A'PD

NATIONAL AERONAUTICS AND SPACE ADMINISTRATION
DRYDEN FLIGHT RESEARCH CENTER
EDWARDS, CA

DRAWING TITLE
FIRE ALARM FLOOR PLAN
FIRST FLOOR – SOUTH

PROJECT TITLE
FACILITIES SUPPORT CENTER BUILDING
100% FINAL DESIGN SUBMITTAL

APPROVALS	DATE
Chief, Facilities Engineering & Asset Mgmt. Office DAN CROWLEY	4/14/11
Project Requestor/Customer DAN CROWLEY	4/14/11
Facilities Project Manager GEMMA FLORES	4/14/11
Chief, Office of Protective Services JOHN ZELLMER	4/14/11
Chief – Safety, Health and Environmental Office DAN MULLEN	4/14/11
DFRC Chief Information Officer KEN NORLIN	4/14/11

DATE STRTD	11/04/10	DATE PRNTD	03/14/11
DRAWN BY	HMO	EDM–1703	
SCALE	AS INDICATED	TRADE SH. No.	
FILE NAME		FA1.2	SHEET No. 176 of 193

WIRE LEGEND			
DESIGNATION	CIRCUIT TYPE	WIRE TYPE	CIRCUIT STYLE/CLASS
A	SIGNALING LINE CIRCUIT (SLC LOOP)	2#16 TWISTED/UNSHIELDED	STYLE 7, CLASS A
C	STROBE CIRCUIT	2#12 AWG	CLASS A
D	24 VDC POWER	2#16 AWG	
E	INITIATING DEVICE CIRCUIT	2#16 AWG	CLASS A
H	ANNUNCIATOR DATA CIRCUIT	2#16 TWISTED/SHIELDED	
J	24 VDC ANNUNCIATOR POWER	2#16 AWG	
L	LOW LEVEL (12V PTP) AUDIO RISER	2#16 TWISTED/SHIELDED	
MN	MASS NOTIFICATION STROBE CIRCUIT	2#14 AWG	CLASS A
N	NETWORK CIRCUIT	2#18 TWISTED/UNSHIELDED	STYLE 7, CLASS A
P	DIGITAL AUDIO LOOP (DAL)	BELDEN 5320UJ (18 AWG)	STYLE 7, CLASS A
S	SYNCHRONIZATION CIRCUIT	2#16 AWG	CLASS A
V	SPEAKER CIRCUIT	2#16 TWISTED/SHIELDED	CLASS A

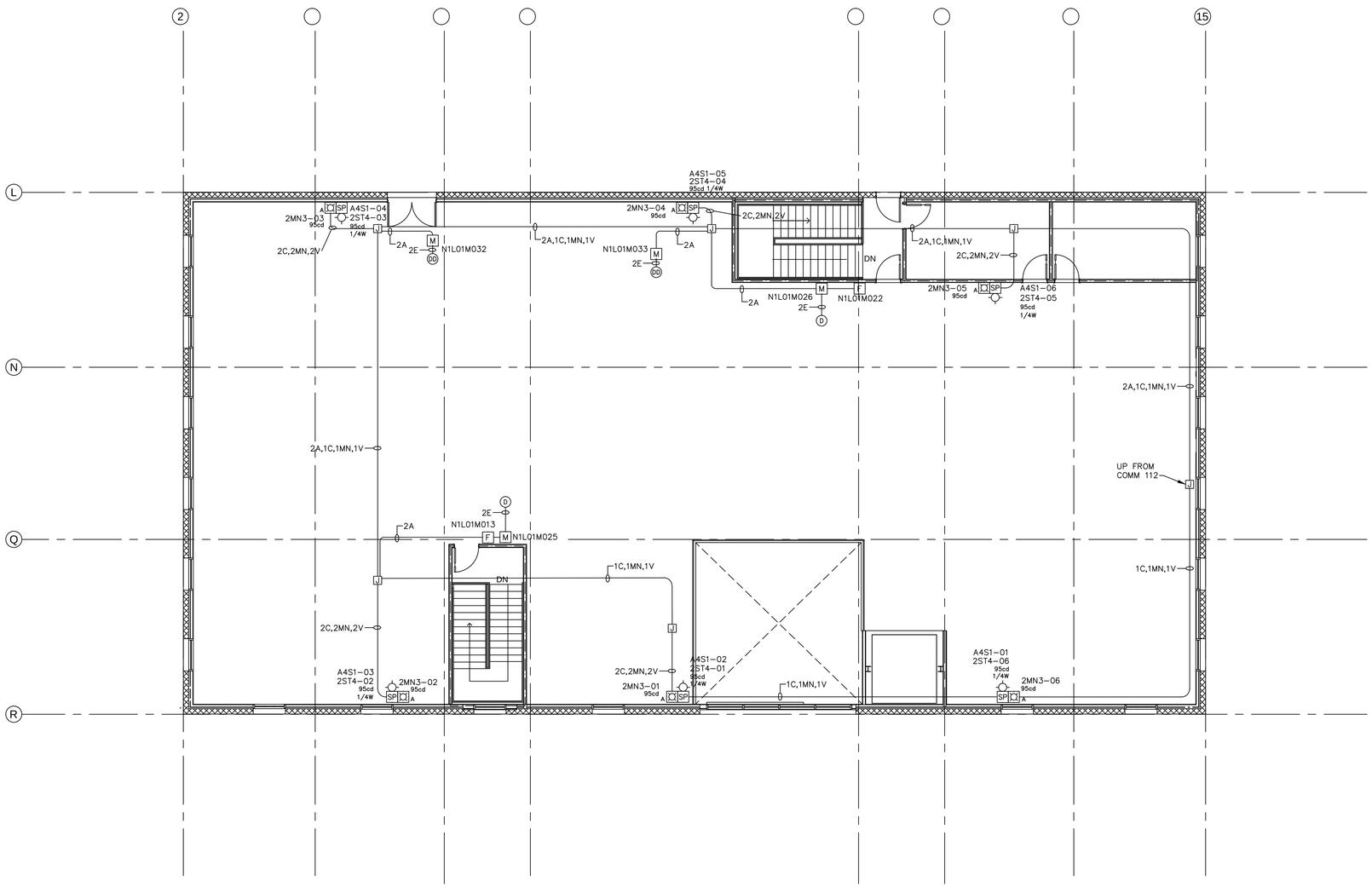

DEVICE LEGEND			
QTY	SYMBOL	DEVICE	PART NUMBER
AS REQ'D	J	JUNCTION BOX	
2	F	MANUAL PULL STATION	
6	SP	SPEAKER/STROBE-WALL MOUNTED	
6	A	STROBE LIGHT-WALL MOUNTED, AMBER	(FUTURE)
2	M	MONITOR MODULE	
2	D	FIRE OR SMOKE DAMPER	BY OTHERS
2	DD	DUCT SMOKE DETECTOR	BY OTHERS

SYSTEM NOTES:

1. TO 120 VAC DEDICATED BRANCH CIRCUIT
2. MONITOR PIV TAMPER SWITCH
3. VERIFY LOCATION WITH OWNER'S REP'S

1MN1-01
- MASS NOTIFICATION
- REMOTE POWER SUPPLY DESIGNATION
- MASS NOTIFICATION
- CIRCUIT NUMBER
- DEVICE NUMBER ON CIRCUIT

1ST1-01
- REMOTE POWER SUPPLY DESIGNATION
- STROBE ("H" FOR HORN)
- CIRCUIT NUMBER
- DEVICE NUMBER ON CIRCUIT

A1S1-01
- AMPLIFIER DESIGNATION
- SPEAKER
- CIRCUIT NUMBER
- DEVICE NUMBER ON CIRCUIT

N1L01D001
- NETWORK NODE NUMBER
- SLC LOOP NUMBER
- DETECTOR (OR "M" FOR MODULE)
- DEVICE ADDRESS ON SLC LOOP

ADDRESS LABEL CLARIFICATION

N

FIRE ALARM PLAN – SECOND FLOOR

SCALE: 1/8"=1'-0"

0 4 8 16 32

REGISTERED PROFESSIONAL ENGINEER
DONALD V. MUDRY
No. FP 1604
Exp. 6-30-11
FIRE PROTECTION
STATE OF CALIFORNIA

MUDRY & ASSOCIATES
Fire Protection Engineering, Consulting and Design
12752 Valley View Street, Suite D
Garden Grove, California 92845
(714) 373-5741
Fax (714) 373-5781
e-mail: fpe@mudry.us

DATE	SYM	REVISION	BY	A'PD

NATIONAL AERONAUTICS AND SPACE ADMINISTRATION
DRYDEN FLIGHT RESEARCH CENTER
EDWARDS, CA

DRAWING TITLE
FIRE ALARM FLOOR PLAN
SECOND FLOOR

PROJECT TITLE
FACILITIES SUPPORT CENTER BUILDING
100% FINAL DESIGN SUBMITTAL

APPROVALS	DATE
Chief, Facilities Engineering & Asset Mgmt. Office DAN CROMLEY	4/14/11
Project Requestor/Customer DAN CROMLEY	4/14/11
Facilities Project Manager GEMMA FLORES	4/14/11
Chief, Office of Protective Services JOHN ZELLMER	4/14/11
Chief – Safety, Health and Environmental Office DAN MULLEN	4/14/11
DFRC Chief Information Officer KEN NORLIN	4/14/11

DATE STRTD	11/04/10	DATE PRNTD	03/14/11
DRAWN BY	HMO	EDM-1703	
SCALE	AS INDICATED	TRADE SH. No.	
FILE NAME		FA1.3	SHEET No. 177 of 193

SYSTEM NOTES:

1. TO 120 VAC DEDICATED BRANCH CIRCUIT
2. MONITOR PIV TAMPER SWITCH
3. VERIFY LOCATION WITH OWNER'S REP'S

WIRE LEGEND			
DESIGNATION	CIRCUIT TYPE	WIRE TYPE	CIRCUIT STYLE/CLASS
A	SIGNALING LINE CIRCUIT (SLC LOOP)	2#16 TWISTED/UNSHIELDED	STYLE 7, CLASS A
C	STROBE CIRCUIT	2#12 AWG	CLASS A
D	24 VDC POWER	2#16 AWG	
E	INITIATING DEVICE CIRCUIT	2#16 AWG	CLASS A
H	ANNUNCIATOR DATA CIRCUIT	2#16 TWISTED/SHIELDED	
J	24 VDC ANNUNCIATOR POWER	2#16 AWG	
L	LOW LEVEL (12V PTP) AUDIO RISER	2#16 TWISTED/SHIELDED	
MN	MASS NOTIFICATION STROBE CIRCUIT	2#14 AWG	CLASS A
N	NETWORK CIRCUIT	2#18 TWISTED/UNSHIELDED	STYLE 7, CLASS A
P	DIGITAL AUDIO LOOP (DAL)	BELDEN 5320UJ (18 AWG)	STYLE 7, CLASS A
S	SYNCHRONIZATION CIRCUIT	2#16 AWG	CLASS A
V	SPEAKER CIRCUIT	2#16 TWISTED/SHIELDED	CLASS A

DEVICE LEGEND		
SYMBOL	DEVICE	PART NUMBER
C	CONTROL MODULE	
ANN	FIRE ALARM ANNUNCIATOR	
FACP	FIRE ALARM CONTROL PANEL	
FS	FLOW SWITCH	BY OTHERS
I	ISOLATOR MODULE	
J	JUNCTION BOX	
F	MANUAL PULL STATION	
MNPS	MASS NOTIFICATION REMOTE POWER SUPPLY	(FUTURE)
M	MONITOR MODULE	
P	PHOTOELECTRIC DETECTOR/BASE	
PIV	POST INDICATING VALVE	BY OTHERS
PRN	PRINTER	
R	RELAY MODULE	
RM	REMOTE MICROPHONE	
SP	SPEAKER/STROBE-CEILING MOUNTED	
SP	SPEAKER/STROBE-WALL MOUNTED	
A	STROBE LIGHT-CEILING MOUNTED, MASS NOTIFICATION	(FUTURE)
A	STROBE LIGHT-WALL MOUNTED, AMBER	(FUTURE)
SS HV	SURGE SUPPRESSOR – HIGH VOLTAGE	
SS LV	SURGE SUPPRESSOR – LOW VOLTAGE	
TS	TAMPER SWITCH	BY OTHERS
VCP	VOICE CONTROL PANEL	
D	FIRE OR SMOKE DAMPER	BY OTHERS
DD	DUCT SMOKE DETECTOR	BY OTHERS

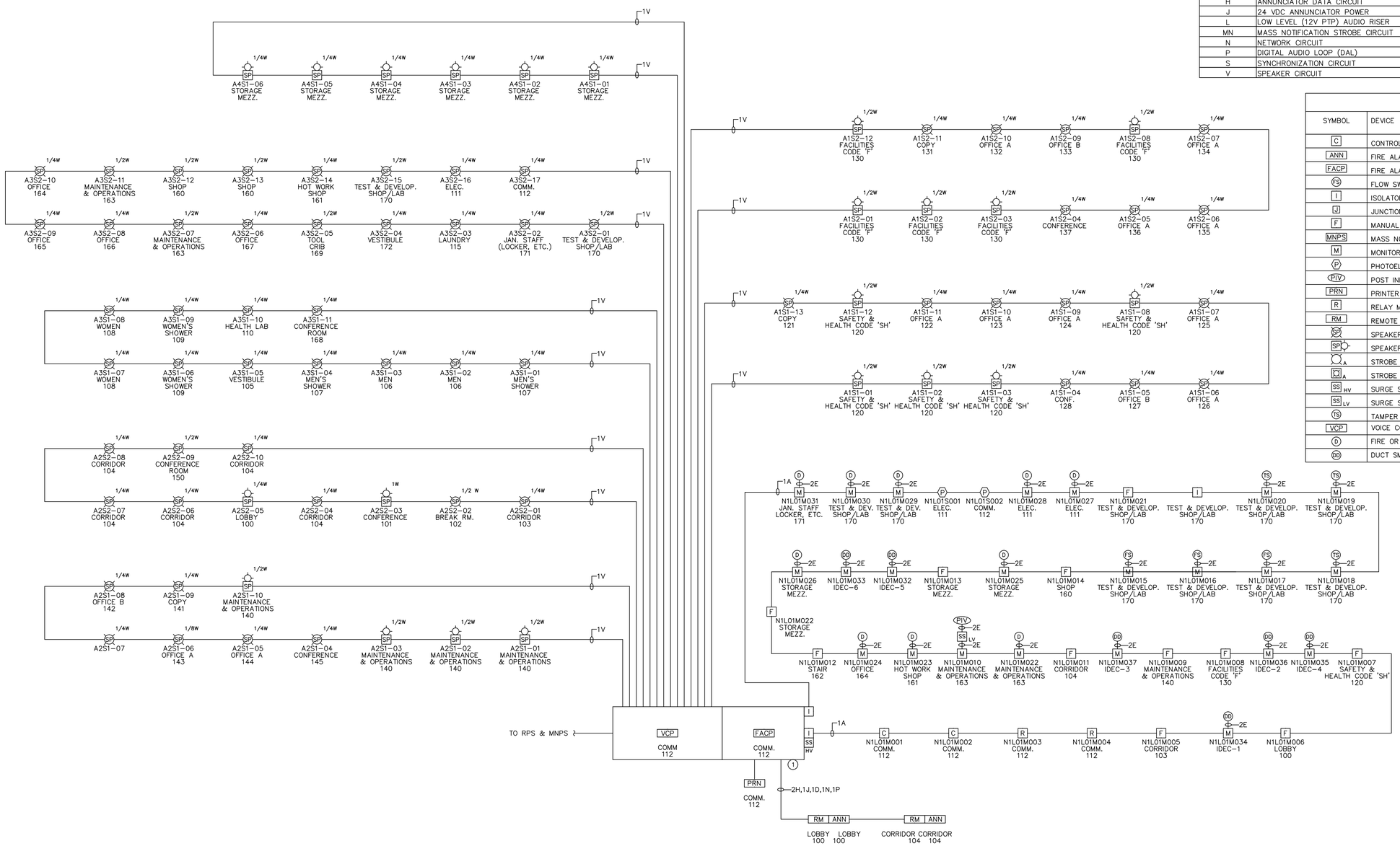

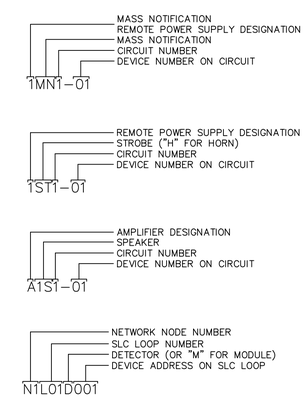

ADDRESS LABEL CLARIFICATION

REGISTERED PROFESSIONAL ENGINEER — FIRE PROTECTION — STATE OF CALIFORNIA — RONALD J. MUDRY — No. FP 1 — Exp. 6-30-11

MUDRY & ASSOCIATES
Fire Protection Engineering, Consulting and Design
12752 Valley View Street, Suite D
Garden Grove, California 92845
(714) 373-5741
Fax (714) 373-5781
e-mail: fpe@mudry.us

DATE	SYM	REVISION	BY	A'PD

NATIONAL AERONAUTICS AND SPACE ADMINISTRATION
DRYDEN FLIGHT RESEARCH CENTER
EDWARDS, CA

DRAWING TITLE
FIRE ALARM RISER DIAGRAM

PROJECT TITLE
FACILITIES SUPPORT CENTER BUILDING
100% FINAL DESIGN SUBMITTAL

APPROVALS		DATE
Chief, Facilities Engineering & Asset Mgmt. Office DAN CROMLEY		4/14/11
Project Requestor/Customer DAN CROMLEY		4/14/11
Facilities Project Manager GEMMA FLORES		4/14/11
Chief, Office of Protective Services JOHN ZELLMER		4/14/11
Chief – Safety, Health and Environmental Office DAN MULLEN		4/14/11
DFRC Chief Information Officer KEN NORLIN		4/14/11

DATE STRTD	11/04/10	DATE PRNTD	03/14/11
DRAWN BY	HMO	EDM-1703	
SCALE	AS INDICATED	TRADE SH. No.	
FILE NAME		FA2.1	SHEET No. 178 of 193

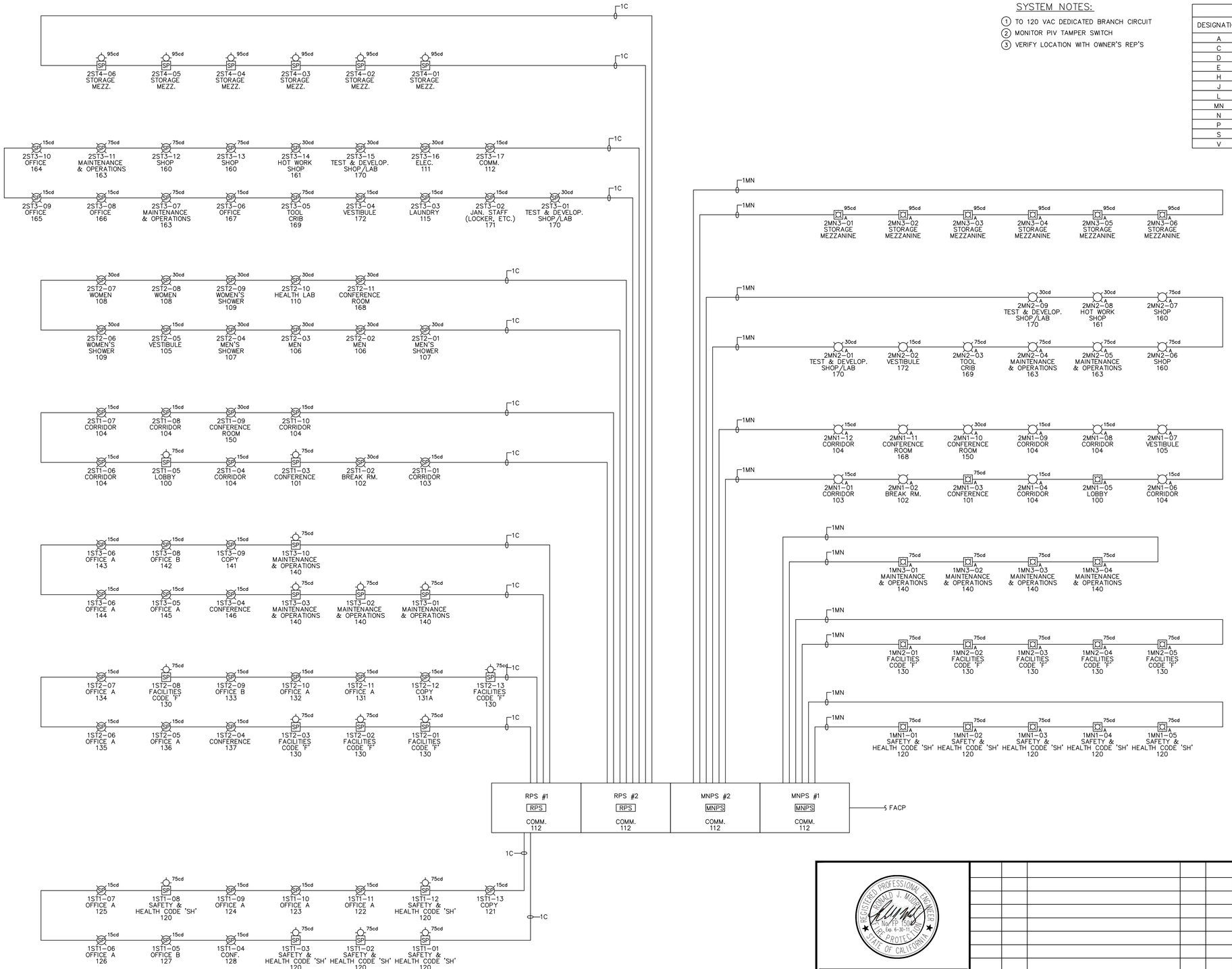

SYSTEM NOTES:

1. TO 120 VAC DEDICATED BRANCH CIRCUIT
2. MONITOR PIV TAMPER SWITCH
3. VERIFY LOCATION WITH OWNER'S REP'S

WIRE LEGEND			
DESIGNATION	CIRCUIT TYPE	WIRE TYPE	CIRCUIT STYLE/CLASS
A	SIGNALING LINE CIRCUIT (SLC LOOP)	2#16 TWISTED/UNSHIELDED	STYLE 7, CLASS A
C	STROBE CIRCUIT	2#12 AWG	CLASS A
D	24 VDC POWER	2#16 AWG	
E	INITIATING DEVICE CIRCUIT	2#16 AWG	CLASS A
H	ANNUNCIATOR DATA CIRCUIT	2#16 TWISTED/SHIELDED	
J	24 VDC ANNUNCIATOR POWER	2#16 AWG	
L	LOW LEVEL (12V PTP) AUDIO RISER	2#16 TWISTED/SHIELDED	
MN	MASS NOTIFICATION STROBE CIRCUIT	2#14 AWG	CLASS A
N	NETWORK CIRCUIT	2#18 TWISTED/UNSHIELDED	STYLE 7, CLASS A
P	DIGITAL AUDIO LOOP (DAL)	BELDEN 5320UJ (18 AWG)	STYLE 7, CLASS A
S	SYNCHRONIZATION CIRCUIT	2#16 AWG	CLASS A
V	SPEAKER CIRCUIT	2#16 TWISTED/SHIELDED	CLASS A

DEVICE LEGEND		
SYMBOL	DEVICE	PART NUMBER
C	CONTROL MODULE	
	END OF LINE RESISTOR	
ANN	FIRE ALARM ANNUNCIATOR	
FACP	FIRE ALARM CONTROL PANEL	
FS	FLOW SWITCH	BY OTHERS
I	ISOLATOR MODULE	
J	JUNCTION BOX	
F	MANUAL PULL STATION	
MNPS	MASS NOTIFICATION REMOTE POWER SUPPLY	(FUTURE)
M	MONITOR MODULE	
P	PHOTOELECTRIC DETECTOR/BASE	
PIV	POST INDICATING VALVE	BY OTHERS
PRN	PRINTER	
R	RELAY MODULE	
RM	REMOTE MICROPHONE	
SP	SPEAKER/STROBE-CEILING MOUNTED	
SP	SPEAKER/STROBE-WALL MOUNTED	
A	STROBE LIGHT-CEILING MOUNTED, MASS NOTIFICATION	(FUTURE)
A	STROBE LIGHT-WALL MOUNTED, AMBER	(FUTURE)
SS HV	SURGE SUPPRESSOR - HIGH VOLTAGE	
SS LV	SURGE SUPPRESSOR - LOW VOLTAGE	
TS	TAMPER SWITCH	BY OTHERS
D	FIRE OR SMOKE DAMPER	BY OTHERS
DD	DUCT SMOKE DETECTOR	BY OTHERS

1MN1-01
- MASS NOTIFICATION
- REMOTE POWER SUPPLY DESIGNATION
- MASS NOTIFICATION
- CIRCUIT NUMBER
- DEVICE NUMBER ON CIRCUIT

1ST1-01
- REMOTE POWER SUPPLY DESIGNATION
- STROBE ("H" FOR HORN)
- CIRCUIT NUMBER
- DEVICE NUMBER ON CIRCUIT

A1S1-01
- AMPLIFIER DESIGNATION
- SPEAKER
- CIRCUIT NUMBER
- DEVICE NUMBER ON CIRCUIT

N1L01D001
- NETWORK NODE NUMBER
- SLC LOOP NUMBER
- DETECTOR (OR "M" FOR MODULE)
- DEVICE ADDRESS ON SLC LOOP

ADDRESS LABEL CLARIFICATION

REGISTERED PROFESSIONAL ENGINEER
RONALD J. MUDRY
No. FE 5748
Exp. 6-30-11
FIRE PROTECTION
STATE OF CALIFORNIA

MUDRY & ASSOCIATES
Fire Protection Engineering, Consulting and Design
12752 Valley View Street, Suite D
Garden Grove, California 92845
(714) 373-5741
Fax (714) 373-5781
e-mail: fpe@mudry.us

DATE	SYM	REVISION	BY	A'PD

NATIONAL AERONAUTICS AND SPACE ADMINISTRATION
DRYDEN FLIGHT RESEARCH CENTER
EDWARDS, CA

DRAWING TITLE
FIRE ALARM RISER DIAGRAM

PROJECT TITLE
FACILITIES SUPPORT CENTER BUILDING
100% FINAL DESIGN SUBMITTAL

APPROVALS		DATE
Chief, Facilities Engineering & Asset Mgmt. Office DAN CROMLEY		4/14/11
Project Requestor/Customer DAN CROMLEY		4/14/11
Facilities Project Manager GEMMA FLORES		4/14/11
Chief, Office of Protective Services JOHN ZELLMER		4/14/11
Chief - Safety, Health and Environmental Office DAN MULLEN		4/14/11
DFRC Chief Information Officer KEN NORLIN		4/14/11

DATE STRTD	11/04/10	DATE PRNTD	03/14/11
DRAWN BY	HMO		EDM-1703
SCALE	AS INDICATED	TRADE SH. No.	
FILE NAME		FA2.2	SHEET No. 179 of 193

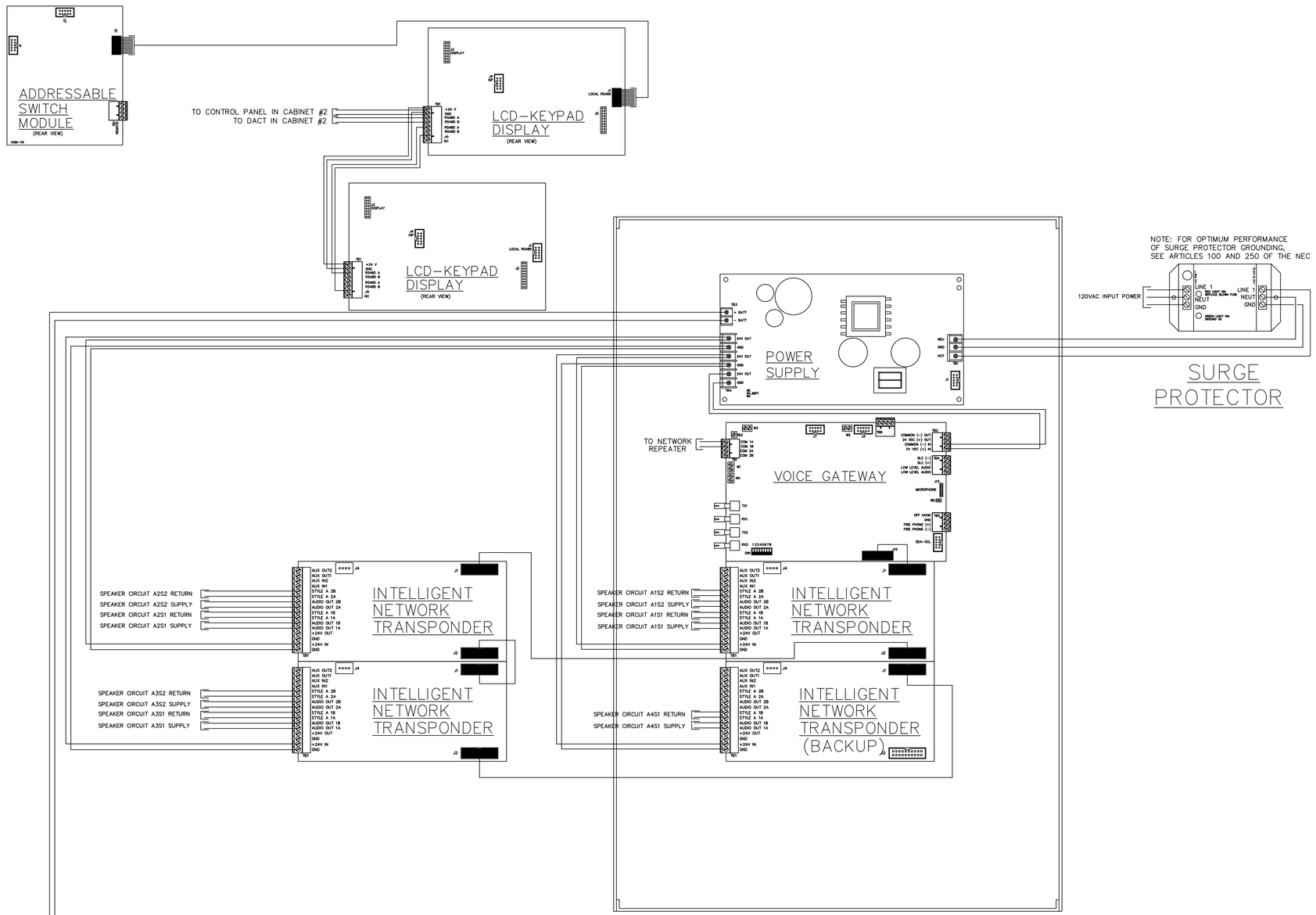

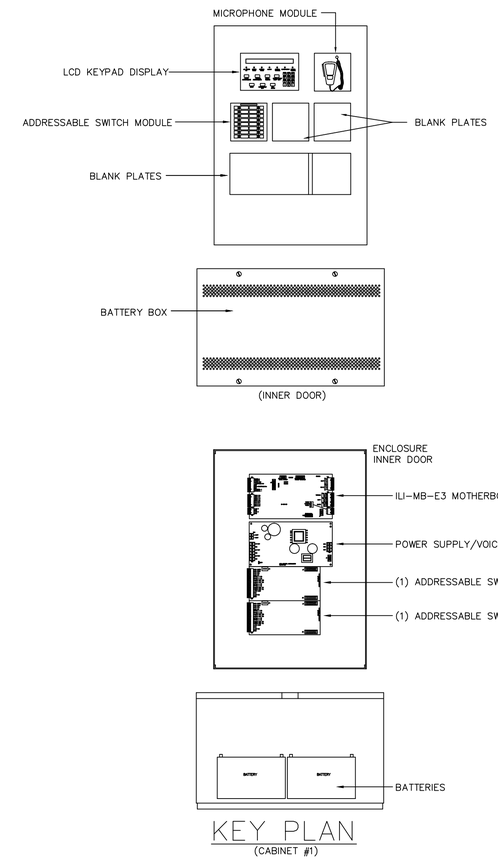

REGISTERED PROFESSIONAL ENGINEER
DONALD J. MUDRY
No. FP 1504
Exp. 6-30-12
FIRE PROTECTION
STATE OF CALIFORNIA

MUDRY & ASSOCIATES
Fire Protection Engineering, Consulting and Design
12752 Valley View Street, Suite D
Garden Grove, California 92845
(714) 373-5741
Fax (714) 373-5781
e-mail: fpe@mudry.us

DATE	SYM	REVISION	BY	A'PD

NATIONAL AERONAUTICS AND SPACE ADMINISTRATION
DRYDEN FLIGHT RESEARCH CENTER
EDWARDS, CA

DRAWING TITLE
FACP WIRING DIAGRAM
CABINET #1

PROJECT TITLE
FACILITIES SUPPORT CENTER BUILDING
100% FINAL DESIGN SUBMITTAL

APPROVALS	DATE
Chief, Facilities Engineering & Asset Mgmt. Office DAN CROWLEY	4/14/11
Project Requestor/Customer DAN CROWLEY	4/14/11
Facilities Project Manager GEMMA FLORES	4/14/11
Chief, Office of Protective Services JOHN ZELLMER	4/14/11
Chief – Safety, Health and Environmental Office DAN MULLEN	4/14/11
DFRC Chief Information Officer KEN NORLIN	4/14/11

DATE STRTD	11/04/10	DATE PRNTD	03/14/11
DRAWN BY	HMO	TRADE SH. No.	EDM-1703
SCALE	AS INDICATED		
FILE NAME		FA3.1	SHEET NO. 180 of 193