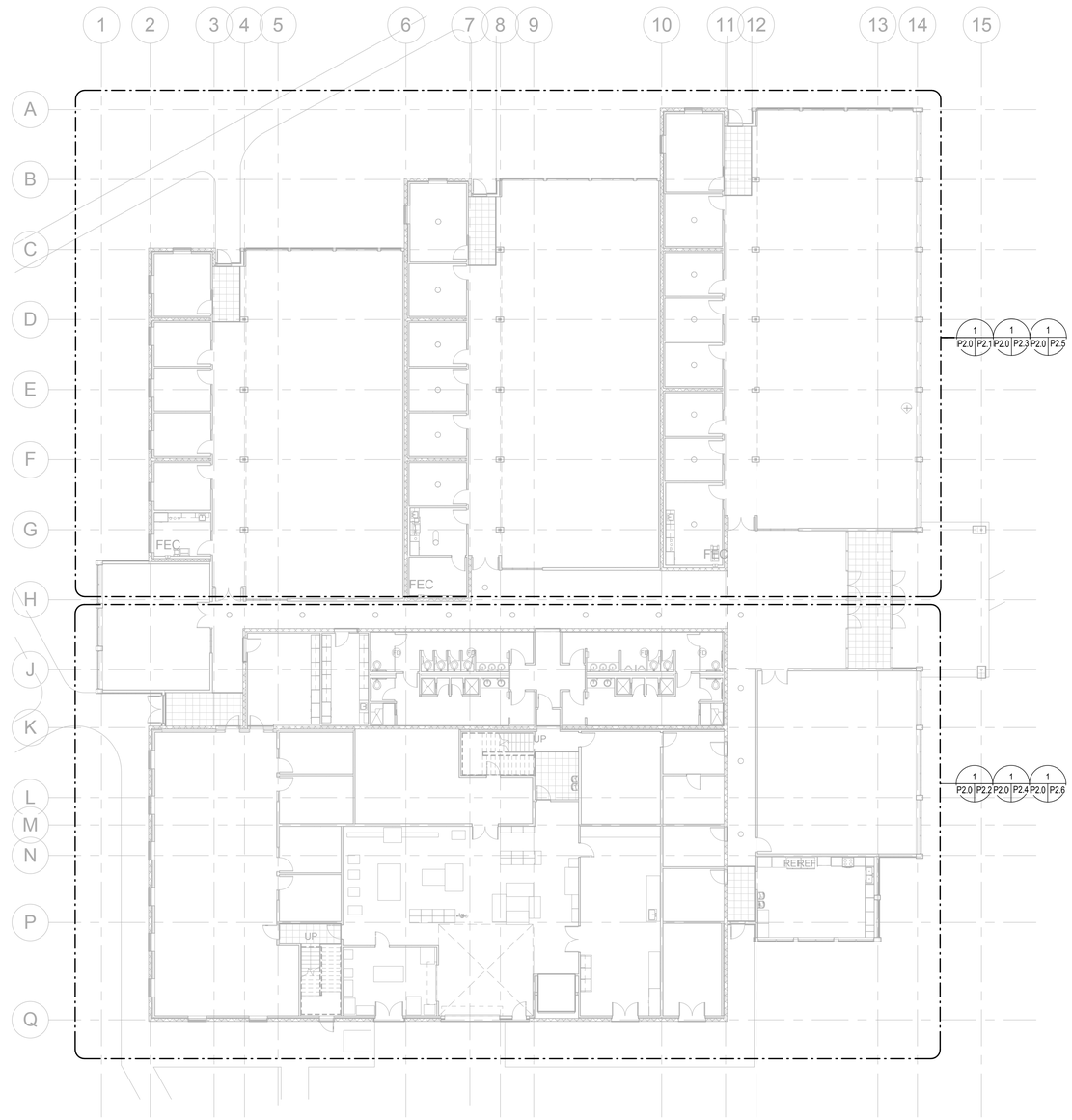

SCALE: 1/16" = 1'-0"

0 16 32 48 64

PLUMBING OVERALL PLAN

SCALE: 1/16" = 1'-0"

REGISTERED PROFESSIONAL ENGINEER
DONN C. GILMORE
No. 11541
Exp. 9-30-11
MECHANICAL
STATE OF CALIFORNIA

DONN C. GILMORE & ASSOCIATES, INC.
Consulting Mechanical and Electrical Engineers
DCGA
4051 E. La Palma Ave., Ste. A
Anaheim, CA 92807
Ph.: 714.630.4291
Fax: 714.630.4805

DATE	SYM	REVISION	BY	A'PD

NATIONAL AERONAUTICS AND SPACE ADMINISTRATION

DRYDEN FLIGHT RESEARCH CENTER
EDWARDS, CA

DRAWING TITLE

PLUMBING OVERALL PLAN

PROJECT TITLE

FACILITIES SUPPORT CENTER BUILDING
100% FINAL DESIGN SUBMITTAL

APPROVALS		DATE
Chief, Facilities Engineering & Asset Mgmt. Office **DAN CROWLEY**		4/14/11
Project Requestor /Customer **DAN CROWLEY**		4/14/11
Facilities Project Manager **GEMMA FLORES**		4/14/11
Chief, Office of Protective Services **JOHN ZELLMER**		4/14/11
Chief - Safety, Health, and Environmental Office **DAN MULLEN**		4/14/11
DFRC Chief Information Officer **KEN NORLIN**		4/14/11

DATE STRTD	11/08/10	DATE PRNTD	03/14/11
DRAWN BY		EDM-1703	
SCALE	AS NOTED	TRADE SH. No.	
FILE NAME		P2.0	SHEET No. 141 of 193

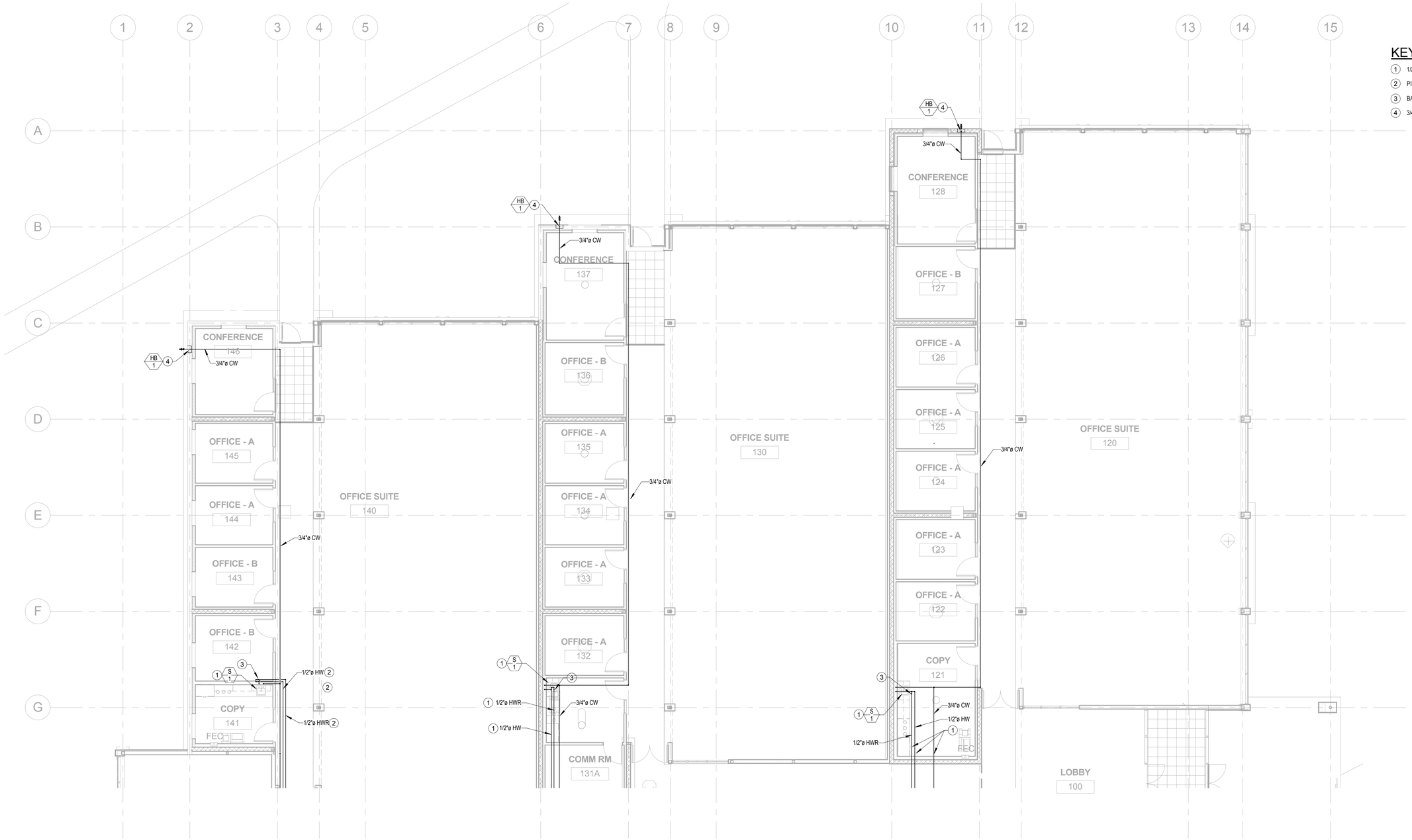

KEY NOTES:

1. 1/2" HW & CW DOWN
2. PIPING ABOVE CEILING.
3. BALANCING VALVE. SET VALVE AT 2GPM FLOW
4. 3/4" CW DOWN IN WALL TO HOSE BIBB IN WALL BOX

SCALE: 1/8" = 1'-0"

0 8 16 24 32

WATER, GAS & COMPRESSED AIR PIPING PLAN - NORTH SEGMENT

SCALE: 1/8" = 1'-0"

REGISTERED PROFESSIONAL ENGINEER
DONN C. GILMORE
No. 11541
Exp. 9-30-11
MECHANICAL
STATE OF CALIFORNIA

DONN C. GILMORE & ASSOCIATES, INC.
Consulting Mechanical and Electrical Engineers
DCGA
4051 E. La Palma Ave., Ste. A
Anaheim, CA 92807
Ph.: 714.630.4291
Fax: 714.630.4805

DATE	SYM	REVISION	BY	A'PD

NATIONAL AERONAUTICS AND SPACE ADMINISTRATION

DRYDEN FLIGHT RESEARCH CENTER
EDWARDS, CA

DRAWING TITLE

WATER, GAS & COMPRESSED AIR PIPING PLAN - NORTH SEGMENT

PROJECT TITLE

FACILITIES SUPPORT CENTER BUILDING
100% FINAL DESIGN SUBMITTAL

APPROVALS		DATE
Chief, Facilities Engineering & Asset Mgmt. Office DAN CROWLEY	Dan Crowley	4/14/11
Project Requestor (Customer) DAN CROWLEY	Dan Crowley	4/14/11
Facilities Project Manager GEMMA FLORES	Gemma Flores	4/14/11
Chief, Office of Protective Services JOHN ZELLMER		4/14/11
Chief - Safety, Health, and Environmental Office DAN MULLEN	Dan Mullen	4/14/11
DFRC Chief Information Officer KEN NORLIN		4/14/11

DATE STRTD	11/08/10	DATE PRNTD	03/14/11
DRAWN BY			EDM-1703
SCALE	AS NOTED	TRADE SH. No.	
FILE NAME		P2.1	SHEET No. 142 of 193

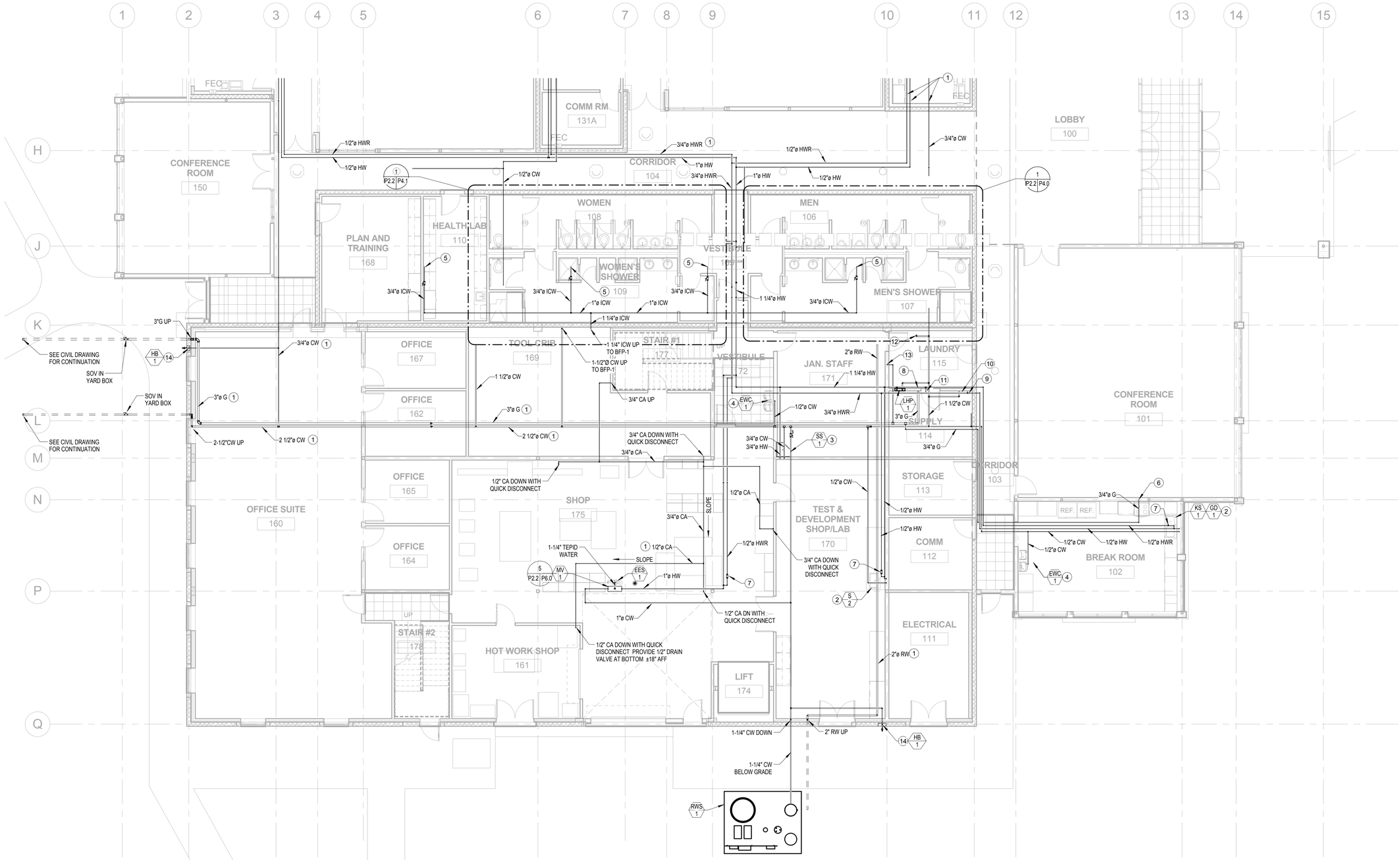

KEY NOTES:

1. PIPING ABOVE CEILING
2. 1/2" HW & CW DOWN
3. 3/4" HW & CW DOWN
4. 1/2" CW DOWN
5. 3/4" ICW UP TO EVAP. COOLER CONTROL VALVE SEE MECH DWG FOR DETAIL AND LOCATION
6. 3/4"G DOWN TO RANGE COMPLETE WITH SOC.
7. BALANCING VALVE
8. 3"G UP.
9. 3/4" HWR UP
10. 1-1/4" CW UP
11. 1-1/4" HW UP
12. 1-1/2" CW UP
13. 3/4" G DOWN TO FUTURE CLOTHES DRYER (35CFH)
14. 3/4" CW DOWN IN WALL TO HOSE BIBB IN WALL BOX

SCALE: 1/8" = 1'-0"

0 8 16 24 32

WATER, GAS & COMPRESSED AIR PIPING PLAN - SOUTH SEGMENT

SCALE: 1/8" = 1'-0"

REGISTERED PROFESSIONAL ENGINEER DONN C. GILMORE No. 11541 Exp. 9-30-11 MECHANICAL STATE OF CALIFORNIA

DONN C. GILMORE & ASSOCIATES, INC.
Consulting Mechanical and Electrical Engineers
DCGA
4051 E. La Palma Ave., Ste. A
Anaheim, CA 92807
Ph.: 714.630.4291
Fax: 714.630.4805

DATE	SYM	REVISION	BY	A'PD

NATIONAL AERONAUTICS AND SPACE ADMINISTRATION

DRYDEN FLIGHT RESEARCH CENTER
EDWARDS, CA

DRAWING TITLE

WATER, GAS & COMPRESSED AIR PIPING PLAN - SOUTH SEGMENT

PROJECT TITLE

FACILITIES SUPPORT CENTER BUILDING
100% FINAL DESIGN SUBMITTAL

APPROVALS		DATE
Chief, Facilities Engineering & Asset Mgmt. Office DAN CROWLEY		4/14/11
Project Requestor /Customer DAN CROWLEY		4/14/11
Facilities Project Manager GEMMA FLORES		4/14/11
Chief, Office of Protective Services JOHN ZELLMER		4/14/11
Chief - Safety, Health, and Environmental Office DAN MULLEN		4/14/11
DFRC Chief Information Officer KEN NORLIN		4/14/11

DATE STRTD	11/08/10	DATE PRNTD	03/14/11
DRAWN BY		EDM-1703	
SCALE	AS NOTED	TRADE SH. No.	P2.2
FILE NAME		SHEET No. 143 of 193	

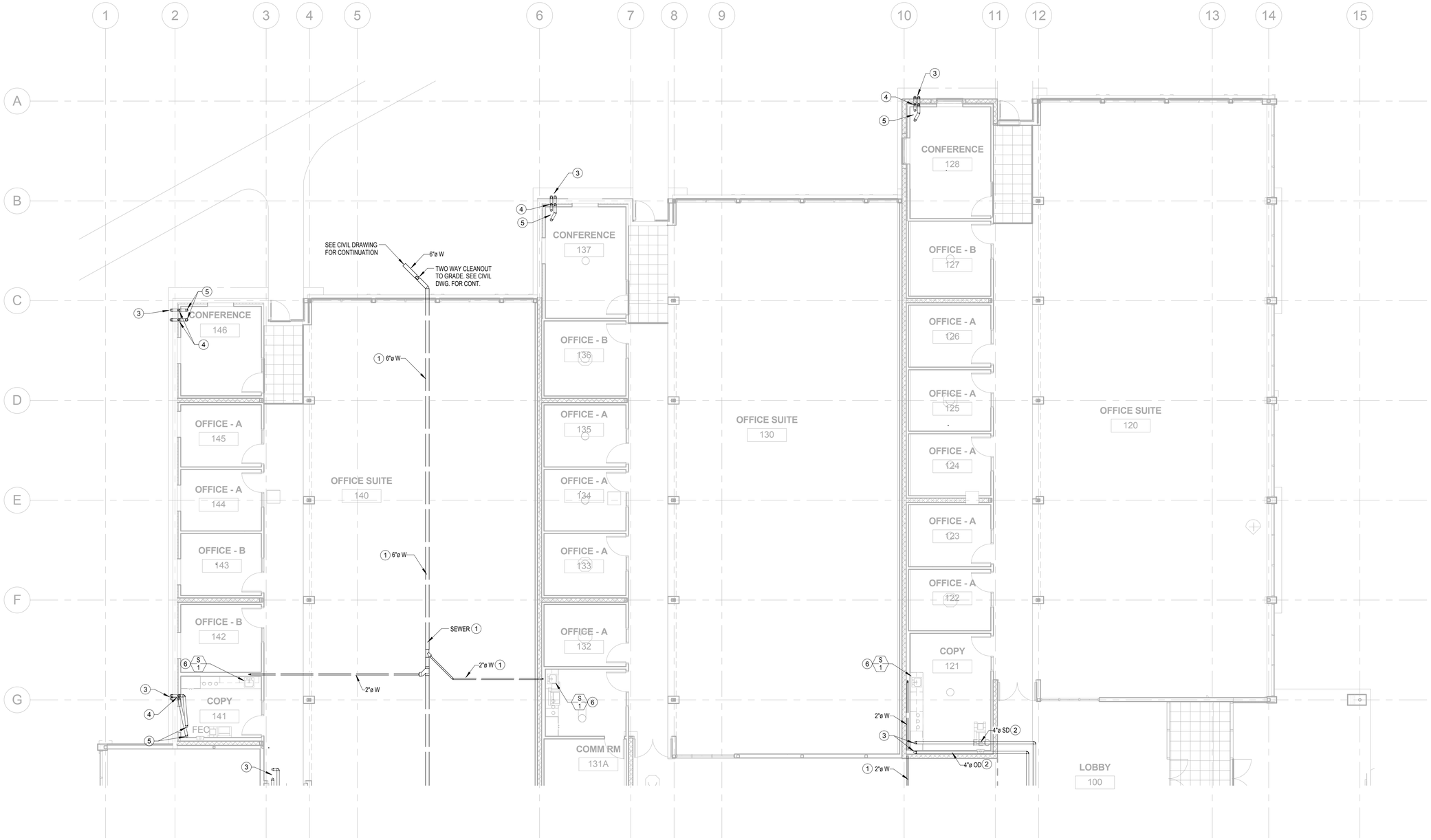

KEY NOTES:

1. PIPING BELOW FLOOR.
2. PIPING ABOVE CEILING
3. 4" SD BELOW GRADE. SEE CIVIL DWG FOR CONT. 4" OD TO TERMINATE ABOVE GRADE.
4. 4" SD & OD DOWN
5. 4" SD & OD UP
6. 2"W DOWN, WITH 1-1/2"V UP TO 1-1/2" VTR.

WASTE, VENT & STORM DRAIN PIPING PLAN - NORTH SEGMENT

SCALE: 1/8" = 1'-0"

REGISTERED PROFESSIONAL ENGINEER DONN C. GILMORE No. 11541 Exp. 9-30-11 MECHANICAL STATE OF CALIFORNIA

DONN C. GILMORE & ASSOCIATES, INC.
Consulting Mechanical and Electrical Engineers
DCGA
4051 E. La Palma Ave., Ste. A
Anaheim, CA. 92807
Ph.: 714.630.4291
Fax: 714.630.4805

DATE	SYM	REVISION	BY	A'PD

NATIONAL AERONAUTICS AND SPACE ADMINISTRATION
DRYDEN FLIGHT RESEARCH CENTER
EDWARDS, CA

DRAWING TITLE
WASTE, VENT & STORM DRAIN PIPING PLAN - NORTH SEGMENT

PROJECT TITLE
FACILITIES SUPPORT CENTER BUILDING
100% FINAL DESIGN SUBMITTAL

APPROVALS	DATE
Chief, Facilities Engineering & Asset Mgmt. Office DAN CROWLEY	4/14/11
Project Requestor /Customer DAN CROWLEY	4/14/11
Facilities Project Manager GEMMA FLORES	4/14/11
Chief, Office of Protective Services JOHN ZELLMER	4/14/11
Chief, Safety, Health, and Environmental Office DAN MULLEN	4/14/11
DFRC Chief Information Officer KEN NORLIN	4/19/11

DATE STRTD	11/08/10	DATE PRNTD	03/14/11
DRAWN BY		EDM-1703	
SCALE	AS NOTED	TRADE SH. No.	P2.3
FILE NAME		SHEET No. 144 of 193	

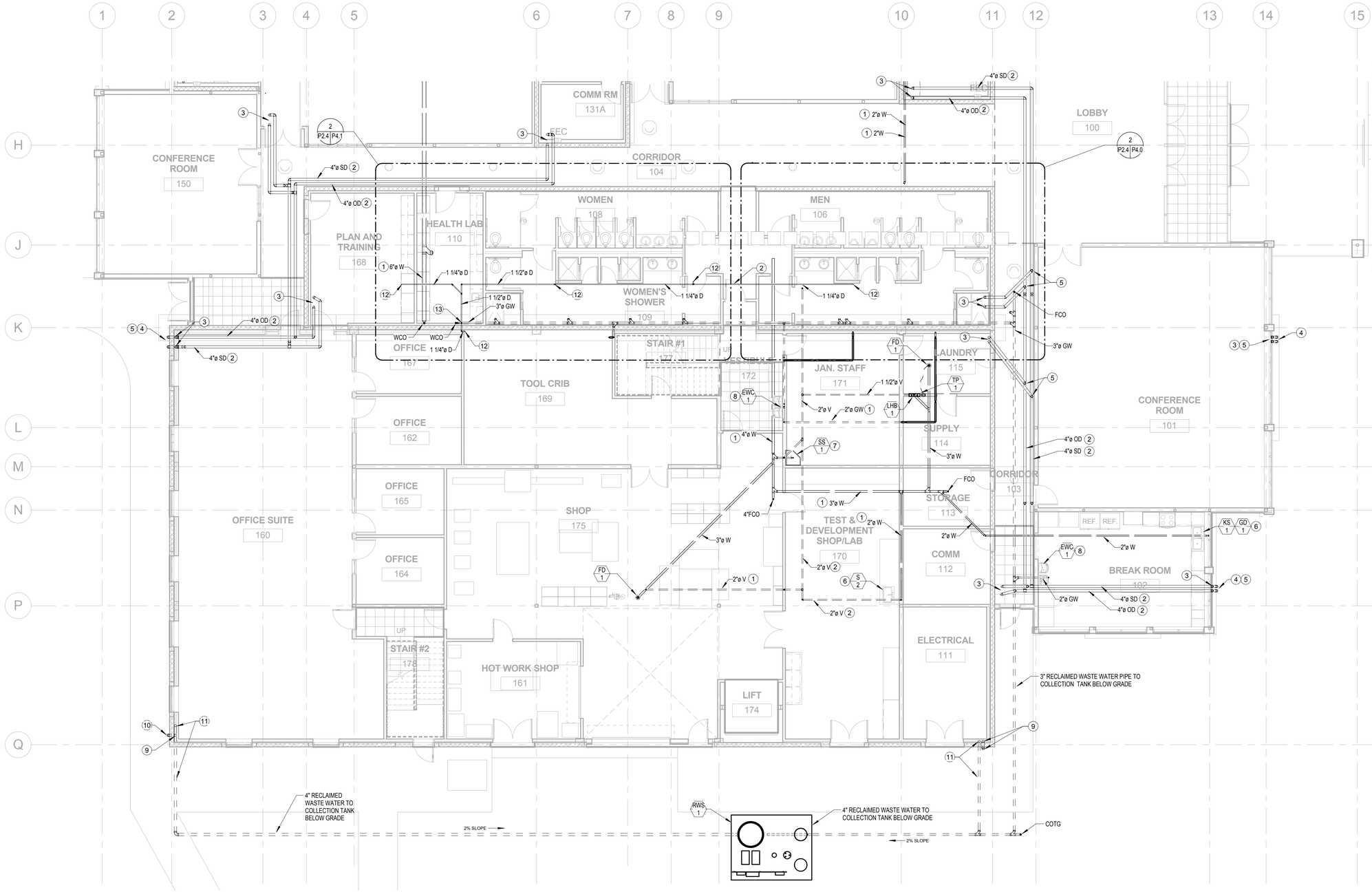

KEY NOTES:

1. PIPING BELOW FLOOR.
2. PIPING ABOVE CEILING.
3. 4" SD & OD UP.
4. 4"SD BELOW GRADE. SEE CIVIL DWG. FOR CONT. 4"OD TERMINATE ABOVE GRADE.
5. 4"SD & OD DOWN.
6. 2"W DOWN WITH 1-1/2"V UP.
7. 3"W DOWN WITH 2"V UP.
8. 2"GW DOWN WITN 1-1/2"V UP.
9. 4"OD UP AND DOWN.
10. 4"OD TERMINATE TO GRADE.
11. 4"SD UP AND DOWN TO BELOW GRADE. CONNECT 4"SD TO 4"GW.
12. 1-1/4" DRAIN UP TO EVAP. COOLER.
13. 1-1/2" DRAIN PIPING UP AND DOWN. CONNECT 1-1/2" DRAIN PIPING RECLAIMED WATER WATER BELOW FLOOR.

WASTE, VENT & STORM DRAIN PIPING PLAN - SOUTH SEGMENT

SCALE: 1/8" = 1'-0"

REGISTERED PROFESSIONAL ENGINEER — DONN C. GILMORE — No. 11541 — Exp. 9-30-11 — MECHANICAL — STATE OF CALIFORNIA

DONN C. GILMORE & ASSOCIATES, INC.
Consulting Mechanical and Electrical Engineers
DCGA
4051 E. La Palma Ave., Ste. A
Anaheim, CA 92807
Ph.: 714.630.4291
Fax: 714.630.4805

DATE	SYM	REVISION	BY	A'PD

NATIONAL AERONAUTICS AND SPACE ADMINISTRATION

DRYDEN FLIGHT RESEARCH CENTER
EDWARDS, CA

DRAWING TITLE

WASTE, VENT & STORM DRAIN PIPING PLAN - SOUTH SEGMENT

PROJECT TITLE

FACILITIES SUPPORT CENTER BUILDING
100% FINAL DESIGN SUBMITTAL

APPROVALS	DATE
Chief, Facilities Engineering Division Office DAN CROWLEY	4/14/11
Project Requestor /Customer DAN CROWLEY	4/14/11
Facilities Project Manager GEMMA FLORES	4/14/11
Chief, Office of Protective Services JOHN ZELLMER	4/14/11
Chief - Safety, Health, and Environmental Office DAN MULLEN	4/14/11
DFRC Chief Information Officer KEN NORLIN	4/14/11

DATE STRTD	11/08/10	DATE PRNTD	03/14/11
DRAWN BY			EDM-1703
SCALE	AS NOTED	TRADE SH. No.	
FILE NAME		P2.4	SHEET No. 145 of 193

KEY NOTES:

1. PIPING ABOVE CEILING.
2. 3/4" CD DN AND TERMINATE TO SINK TAIL PIECE.
3. 3/4" CD, COMPLETE WITH TRAP AND VENT.

CONDENSATE DRAIN PIPING PLAN - NORTH SEGMENT

SCALE: 1/8" = 1'-0"

REGISTERED PROFESSIONAL ENGINEER
DONN C. GILMORE
No. 11541
Exp. 9-30-11
MECHANICAL
STATE OF CALIFORNIA

DONN C. GILMORE & ASSOCIATES, INC.
Consulting Mechanical and Electrical Engineers
DCGA
4051 E. La Palma Ave., Ste. A
Anaheim, CA 92807
Ph.: 714.630.4291
Fax: 714.630.4805

DATE	SYM	REVISION	BY	A'PD

NATIONAL AERONAUTICS AND SPACE ADMINISTRATION
DRYDEN FLIGHT RESEARCH CENTER
EDWARDS, CA

DRAWING TITLE
CONDENSATE DRAIN PIPING PLAN - NORTH SEGMENT

PROJECT TITLE
FACILITIES SUPPORT CENTER BUILDING
100% FINAL DESIGN SUBMITTAL

APPROVALS	DATE
Chief, Facilities Engineering & Asset Mgmt. Office DAN CROWLEY	4/14/11
Project Requestor /Customer DAN CROWLEY	4/14/11
Facilities Project Manager GEMMA FLORES	4/14/11
Chief, Office of Protective Services JOHN ZELLMER	4/14/11
Chief - Safety, Health, and Environmental Office DAN MULLEN	4/14/11
DFRC Chief Information Officer KEN NORLIN	4/14/11

DATE STRTD	11/08/10	DATE PRNTD	03/14/11
DRAWN BY		EDM-1703	
SCALE	AS NOTED	TRADE SH. No. P2.5	
FILE NAME		SHEET No. 146 of 193	

KEY NOTES:

1. PIPING ABOVE CEILING.
2. 3/4" CD DOWN AND TERMINATE TO SINK TAIL PIECE.
3. 3/4" CD COMPLETE WITH TRAP AND VENT.
4. 3/4" CD DOWN, SPILL 3/4" CD OVER SERVICE SINK.
5. 3/4"CD RUN AS HIGH AS POSSIBLE AGAINST WALL.

CONDENSATE DRAIN PIPING PLAN - SOUTH SEGMENT

SCALE: 1/8" = 1'-0"

REGISTERED PROFESSIONAL ENGINEER
DONN C. GILMORE
No. 11541
Exp. 9-30-11
MECHANICAL
STATE OF CALIFORNIA

DONN C. GILMORE & ASSOCIATES, INC.
Consulting Mechanical and Electrical Engineers
DCGA
4051 E. La Palma Ave., Ste. A
Anaheim, CA 92807
Ph.: 714.630.4291
Fax: 714.630.4805

DATE	SYM	REVISION	BY	A'PD

NATIONAL AERONAUTICS AND SPACE ADMINISTRATION

DRYDEN FLIGHT RESEARCH CENTER
EDWARDS, CA

DRAWING TITLE

CONDENSATE DRAIN PIPING PLAN - SOUTH SEGMENT

PROJECT TITLE

FACILITIES SUPPORT CENTER BUILDING
100% FINAL DESIGN SUBMITTAL

APPROVALS		DATE
Chief, Facilities Engineering & Asset Mgmt. Office DAN CROWLEY		4/14/11
Project Requestor /Customer DAN CROWLEY		4/14/11
Facilities Project Manager GEMMA FLORES		4/14/11
Chief, Office of Protective Services JOHN ZELLMER		4/14/11
Chief - Safety, Health, and Environmental Office DAN MULLEN		4/14/11
DFRC Chief Information Officer KEN NORLIN		4/14/11

DATE STRTD	11/08/10	DATE PRNTD	03/14/11
DRAWN BY		EDM-1703	
SCALE	AS NOTED	TRADE SH. No.	
FILE NAME		P2.6	SHEET No. 147 of 193

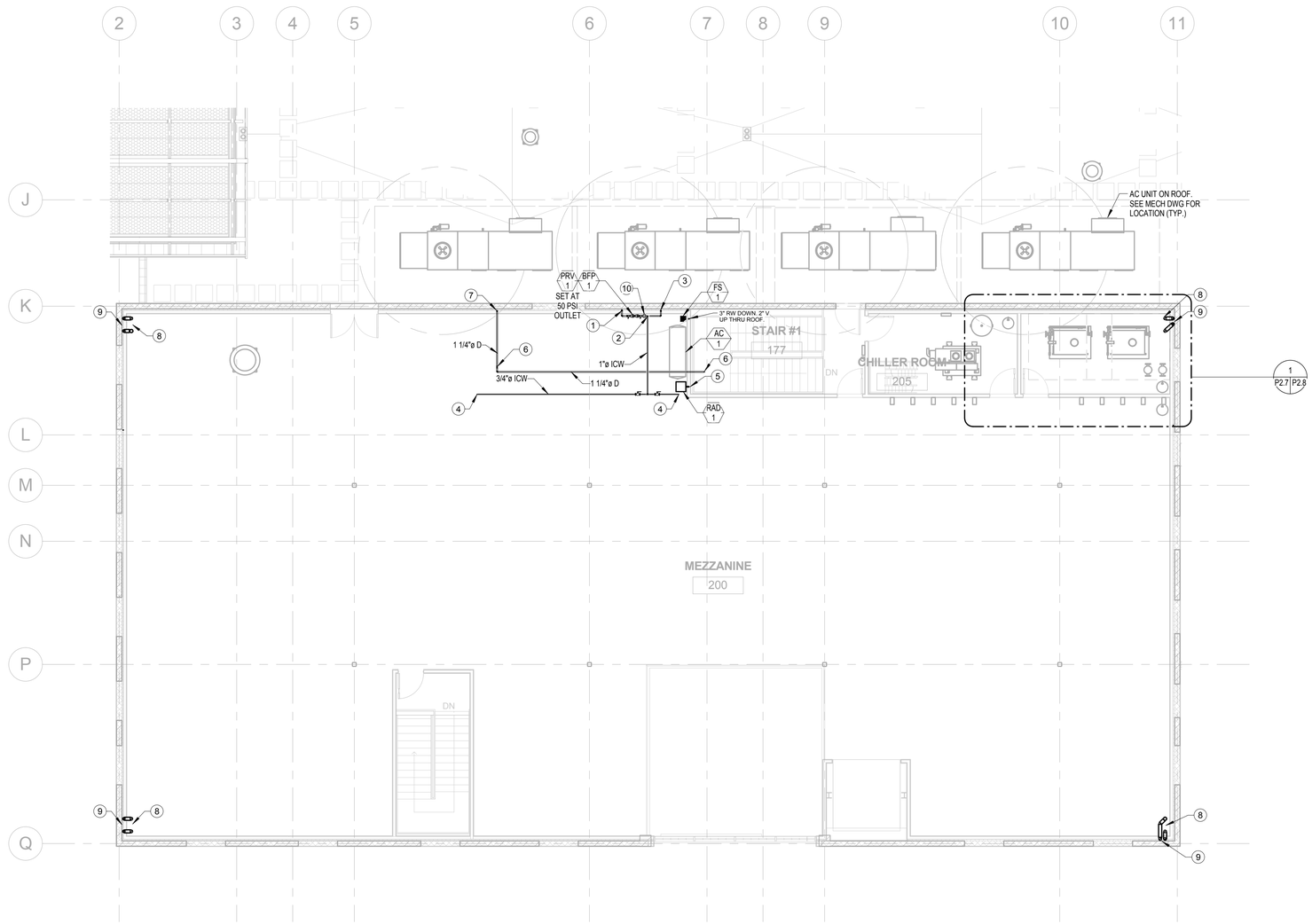

KEY NOTES:

1. 1-1/2"CW DOWN.
2. 1"ICW UP.
3. 1-1/4"ICW DOWN.
4. 3/4"ICW UP TO EVAP. COOLER. CONTROL VALVE SEE MECHANICAL DWG. FOR DETAIL AND LOCATION.
5. 3/4"CA DOWN.
6. 1-1/4" DRAIN UP.
7. 1-1/4" DRAIN DOWN.
8. 4"SD AND OD UP.
9. 4"SD AND OD DOWN.
10. REMOTE WATER METERING SYSTEM. SEE MECHANICAL DWG. AND BMS FOR TYPE AND MODEL.

PLUMBING MEZZANINE

SCALE: 1/8" = 1'-0"

REGISTERED PROFESSIONAL ENGINEER DONN C. GILMORE No. 11541 Exp. 9-30-11 MECHANICAL STATE OF CALIFORNIA

DONN C. GILMORE & ASSOCIATES, INC.
Consulting Mechanical and Electrical Engineers
DCGA
4051 E. La Palma Ave., Ste. A
Anaheim, CA. 92807
Ph.: 714.630.4291
Fax: 714.630.4805

DATE	SYM	REVISION	BY	A'PD

NATIONAL AERONAUTICS AND SPACE ADMINISTRATION

DRYDEN FLIGHT RESEARCH CENTER
EDWARDS, CA

DRAWING TITLE

PLUMBING MEZZANINE

PROJECT TITLE

FACILITIES SUPPORT CENTER BUILDING
100% FINAL DESIGN SUBMITTAL

APPROVALS	DATE
Chief, Facilities Engineering & Asset Mgmt. Office DAN CROWLEY	4/14/11
Project Requestor /Customer DAN CROWLEY	4/14/11
Facilities Project Manager GEMMA FLORES	4/14/11
Chief, Office of Protective Services JOHN ZELLMER	4/14/11
Chief - Safety, Health, and Environmental Office DAN MULLEN	4/14/11
DFRC Chief Information Officer KEN NORLIN	4/19/11

DATE STRTD	11/08/10	DATE PRNTD	03/14/11
DRAWN BY		TRADE SH. No.	EDM-1703
SCALE	AS NOTED		
FILE NAME		P2.7	SHEET No. 148 of 193

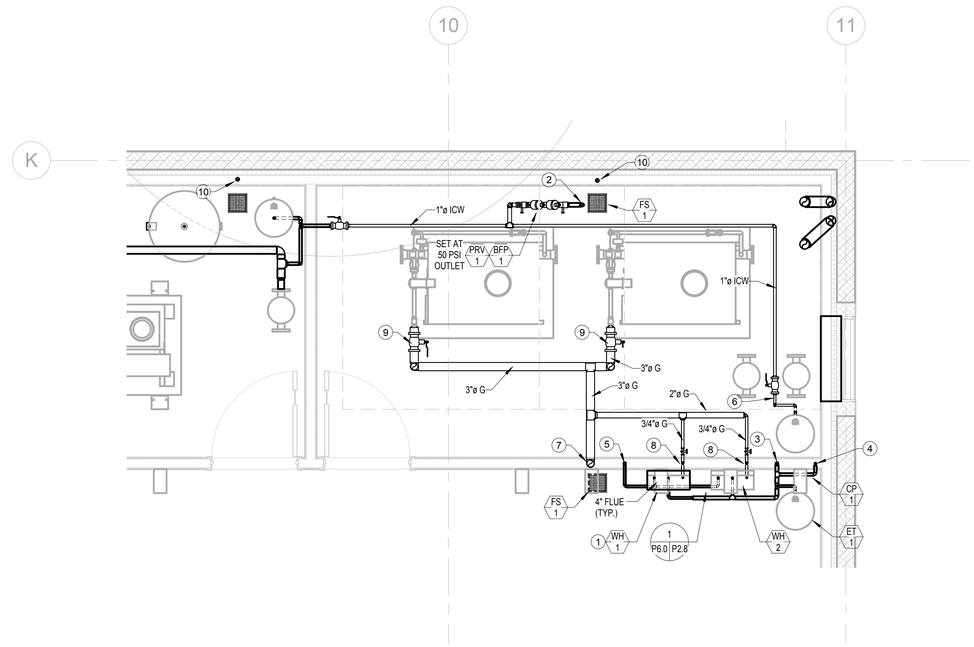

KEY NOTES:

1. CONNECT 3/4"HW, CW AND GAS TO WATER HEATER. 3/4"HW, CW AND GAS DOWN.
2. 1-1/2"CW DOWN.
3. 1-1/4" CW DOWN.
4. 3/4" HWR DOWN.
5. 1-1/4" HW DOWN.
6. 3/4" ICW TO MECHANICAL SYSTEM EXPANSION TANK
7. 3" G FROM BELOW.
8. 3/4" G W/GC TO WH (199CFH)
9. 3" G W/GC TO BOILER
10. 1-1/2" VTR

PARTIAL MEZZANINIE PLAN - BOILER ROOM

SCALE: 3/8" = 1'-0"

1 P2.7 P2.8

REGISTERED PROFESSIONAL ENGINEER DONN C. GILMORE No. 11541 Exp. 9-30-11 MECHANICAL STATE OF CALIFORNIA

DONN C. GILMORE & ASSOCIATES, INC.
Consulting Mechanical and Electrical Engineers
DCGA
4051 E. La Palma Ave., Ste. A
Anaheim, CA 92807
Ph.: 714.630.4291
Fax: 714.630.4805

DATE	SYM	REVISION	BY	A'PD

NATIONAL AERONAUTICS AND SPACE ADMINISTRATION

DRYDEN FLIGHT RESEARCH CENTER
EDWARDS, CA

DRAWING TITLE

PARTIAL MEZZANINIE PLAN - BOILER ROOM

PROJECT TITLE

FACILITIES SUPPORT CENTER BUILDING
100% FINAL DESIGN SUBMITTAL

APPROVALS	DATE
Chief, Facilities Engineering & Asset Mgmt. Office **DAN CROWLEY**	4/14/11
Project Requestor /Customer **DAN CROWLEY**	4/14/11
Facilities Project Manager **GEMMA FLORES**	4/14/11
Chief, Office of Protective Services **JOHN ZELLMER**	4/14/11
Chief - Safety, Health, and Environmental Office **DAN MULLEN**	4/14/11
DFRC Chief Information Officer **KEN NORLIN**	4/14/11

DATE STRTD	11/08/10	DATE PRNTD	03/14/11
DRAWN BY			EDM-1703
SCALE	AS NOTED	TRADE SH. No.	P2.8
FILE NAME			SHEET No. 149 of 193

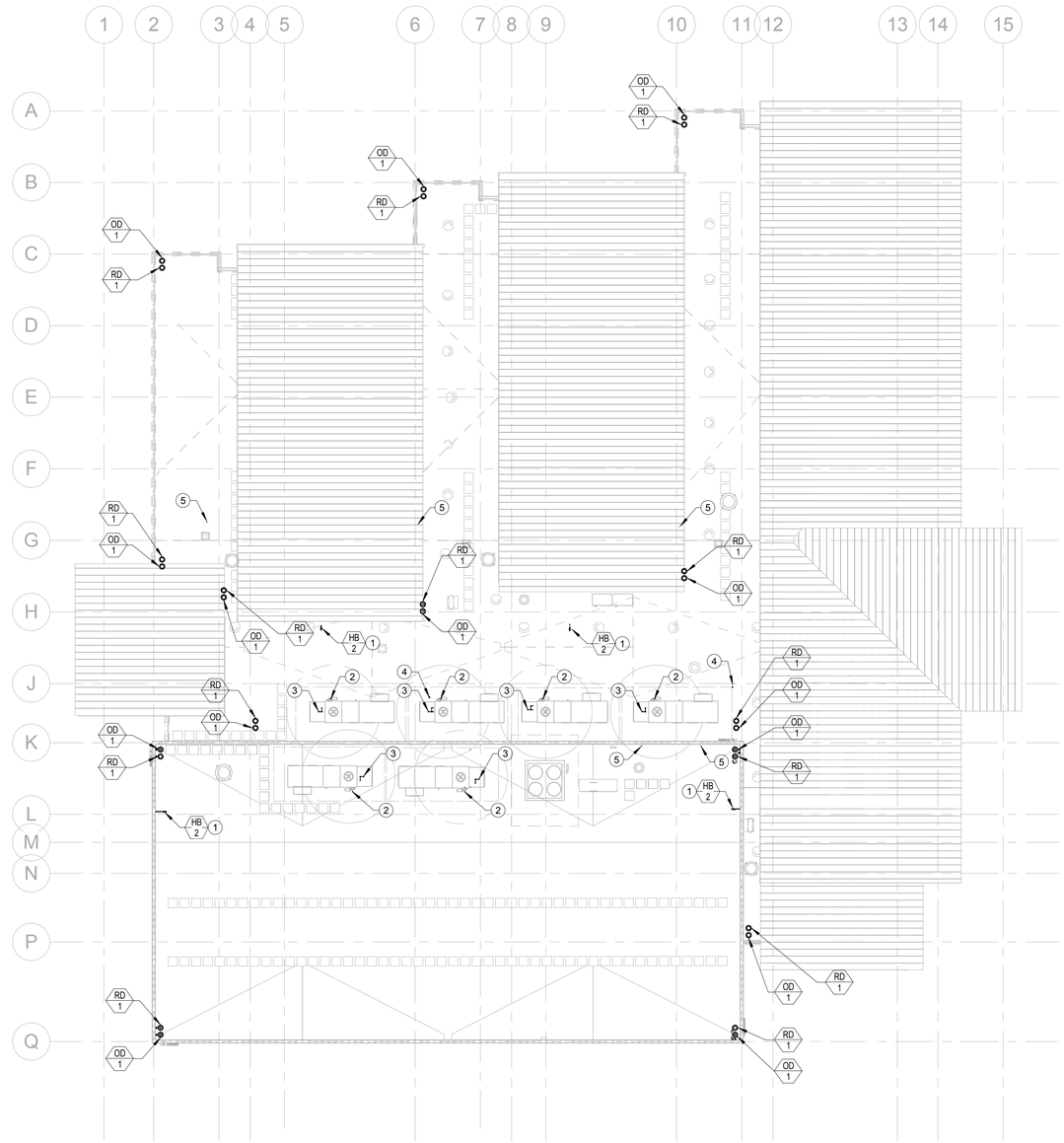

KEY NOTES:

1. 3/4"CW UP FROM BELOW.
2. CONNECT 3/4" ICW TO EVAP. COOLER, 1" ICW DOWN.
3. 1-1/4" DRAIN FROM EVAP. COOLER DOWN.
4. 3" VTR
5. 1-1/2" VTR

SCALE: 1/16" = 1'-0"

0 16 32 48 64

PLUMBING ROOF PLAN

SCALE: 1/16" = 1'-0"

REGISTERED PROFESSIONAL ENGINEER
DONN C. GILMORE
No. 11541
Exp. 9-30-11
MECHANICAL
STATE OF CALIFORNIA

DONN C. GILMORE & ASSOCIATES, INC.
Consulting Mechanical and Electrical Engineers
DCGA
4051 E. La Palma Ave., Ste. A
Anaheim, CA. 92807
Ph.: 714.630.4291
Fax: 714.630.4805

DATE	SYM	REVISION	BY	A'PD

NATIONAL AERONAUTICS AND SPACE ADMINISTRATION

DRYDEN FLIGHT RESEARCH CENTER
EDWARDS, CA

DRAWING TITLE

PLUMBING ROOF PLAN

PROJECT TITLE

FACILITIES SUPPORT CENTER BUILDING
100% FINAL DESIGN SUBMITTAL

APPROVALS	DATE
Chief, Facilities Engineering & Asset Mgmt. Office **DAN CROWLEY**	4/14/11
Project Requestor /Customer **DAN CROWLEY**	4/14/11
Facilities Project Manager **GEMMA FLORES**	4/14/11
Chief, Office of Protective Services **JOHN ZELLMER**	4/14/11
Chief - Safety, Health, and Environmental Office **DAN MULLEN**	4/14/11
DFRC Chief Information Officer **KEN NORLIN**	4/14/11

DATE STRTD	11/08/10	DATE PRNTD	03/14/11
DRAWN BY		EDM-1703	
SCALE	AS NOTED	TRADE SH. No.	P3.0
FILE NAME		SHEET No. 150 of 193	

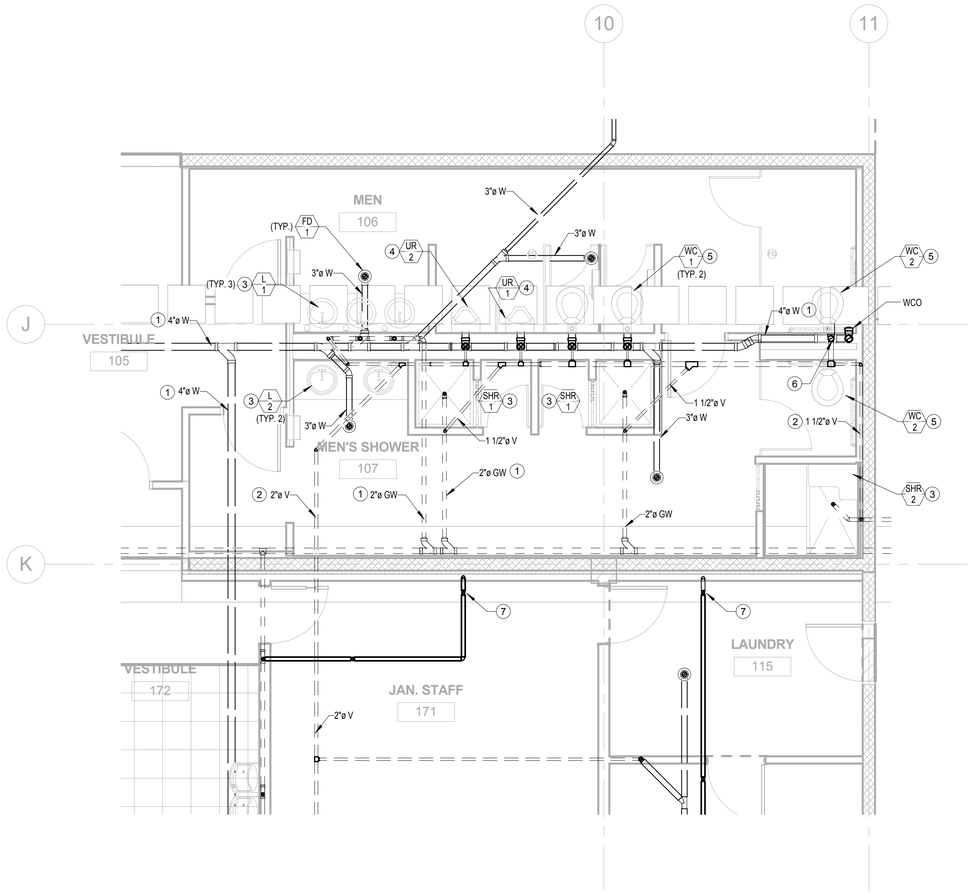

KEY NOTES

1. PIPING BELOW FLOOR.
2. PIPING ABOVE CEILING.
3. 2" GREY WASTE DOWN, 1-1/2" V UP.
4. 2" WASTE DOWN, 1-1/2" V UP.
5. 4" WASTE DOWN, 2" V UP.
6. 3" VTR.
7. 3" WASTE UP TO FS-1

ENLARGED MEN'S RESTROOM AND SHOWER - WASTE AND VENT PIPING PLAN

SCALE: 1/4" = 1'-0" | 2 | P2.4 | P4.0

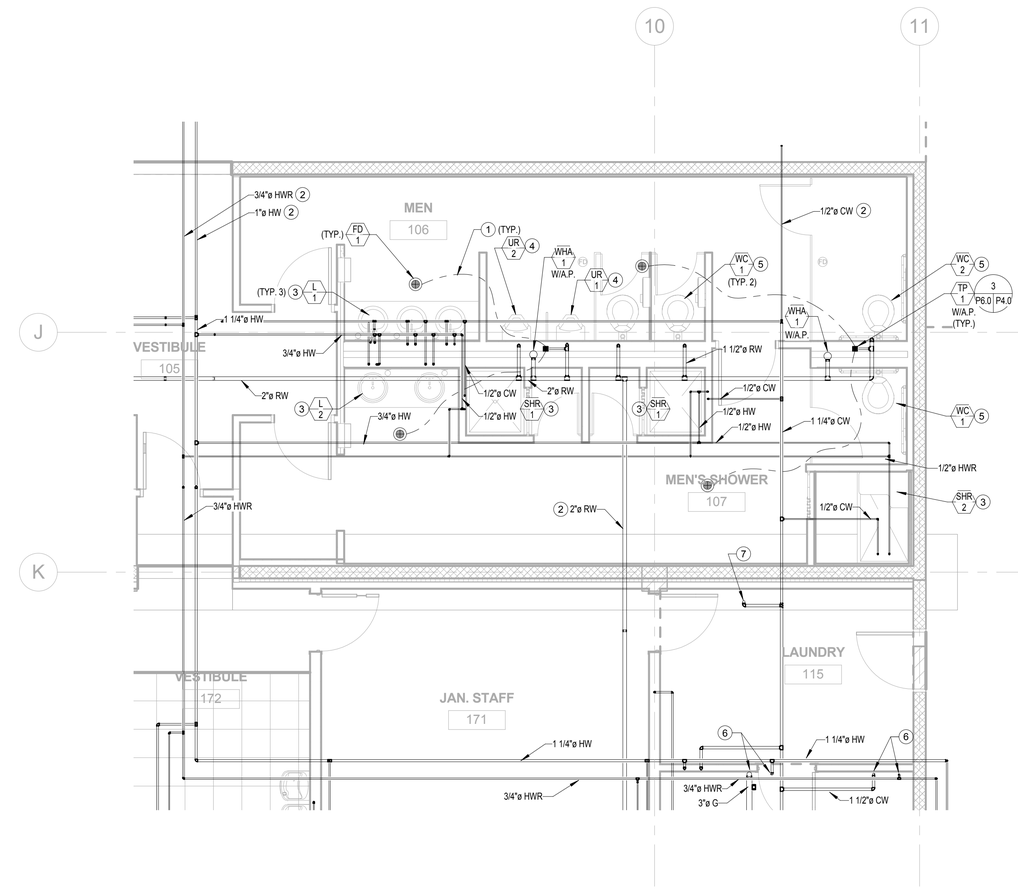

KEY NOTES

1. PIPING BELOW FLOOR.
2. PIPING ABOVE CEILING.
3. 1/2" HW & CW DOWN.
4. 1-1/4" RECLAIMED WATER SUPPLY DOWN.
5. 1-1/2" RECLAIMED WATER SUPPLY DOWN.
6. 3/4"HW, CW AND 3/4" HWR UP TO WATER HEATER ON MEZZANINE.
7. 1-1/2"CW UP TO BFP-1.

ENLARGED MEN'S RESTROOM AND SHOWER - HOT AND COLD WATER PLAN

SCALE: 1/4" = 1'-0" | 1 | P2.2 | P4.0

REGISTERED PROFESSIONAL ENGINEER — DONN C. GILMORE — No. 11541 — Exp. 9-30-11 — MECHANICAL — STATE OF CALIFORNIA

DONN C. GILMORE & ASSOCIATES, INC.
Consulting Mechanical and Electrical Engineers
DCGA
4051 E. La Palma Ave., Ste. A
Anaheim, CA 92807
Ph.: 714.630.4291
Fax: 714.630.4805

DATE	SYM	REVISION	BY	A'PD

NATIONAL AERONAUTICS AND SPACE ADMINISTRATION

DRYDEN FLIGHT RESEARCH CENTER
EDWARDS, CA

DRAWING TITLE

PLUMBING ENLARGED PLANS

PROJECT TITLE

FACILITIES SUPPORT CENTER BUILDING
100% FINAL DESIGN SUBMITTAL

APPROVALS	DATE
Chief, Facilities Engineering Division Project Office DAN CROWLEY	4/14/11
Project Requestor /Customer DAN CROWLEY	4/14/11
Facilities Project Manager GEMMA FLORES	4/14/11
Chief, Office of Protective Services JOHN ZELLMER	4/14/11
Chief - Safety, Health, and Environmental Office DAN MULLEN	4/14/11
DFRC Chief Information Officer KEN NORLIN	4/14/11

DATE STRTD	11/08/10	DATE PRNTD	03/14/11
DRAWN BY		EDM-1703	
SCALE	AS NOTED	TRADE SH. No.	P4.0
FILE NAME		SHEET No. 151 of 193	

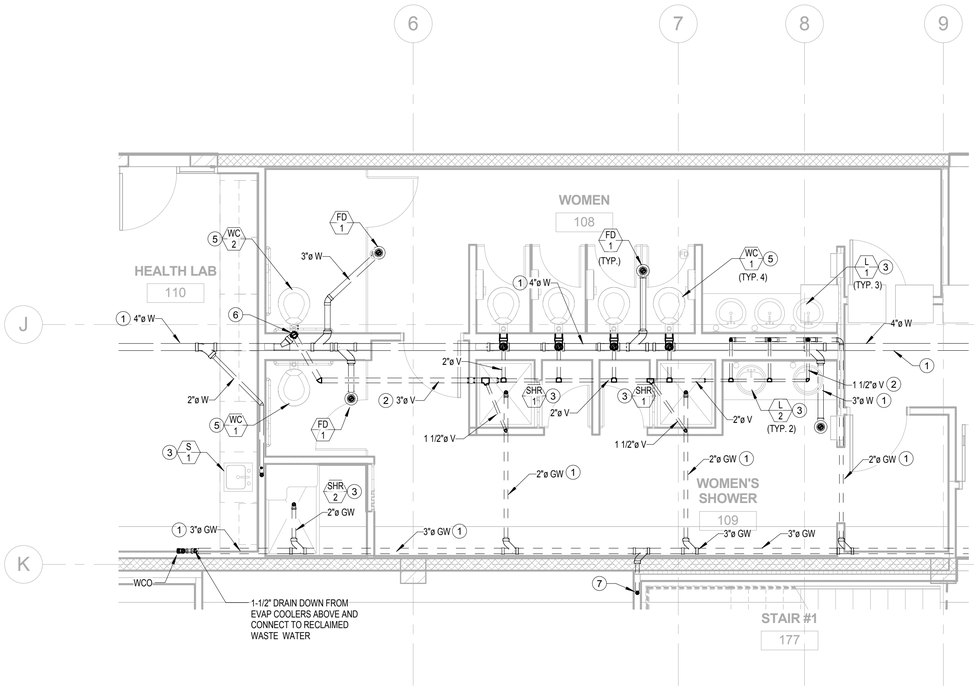

KEY NOTES

1. PIPING BELOW FLOOR.
2. PIPING ABOVE CEILING.
3. 2" GREY WASTE DOWN, 1-1/2" V UP.
4. 2" WASTE DOWN, 1-1/2" V UP.
5. 4" WASTE DOWN, 2" V UP.
6. 3" VTR.
7. 3" W UP TO FS-1

ENLARGED WOMEN'S RESTROOM AND SHOWER - WASTE AND VENT PIPING PLAN

SCALE: 1/4" = 1'-0" (2 / P2.4 / P4.1)

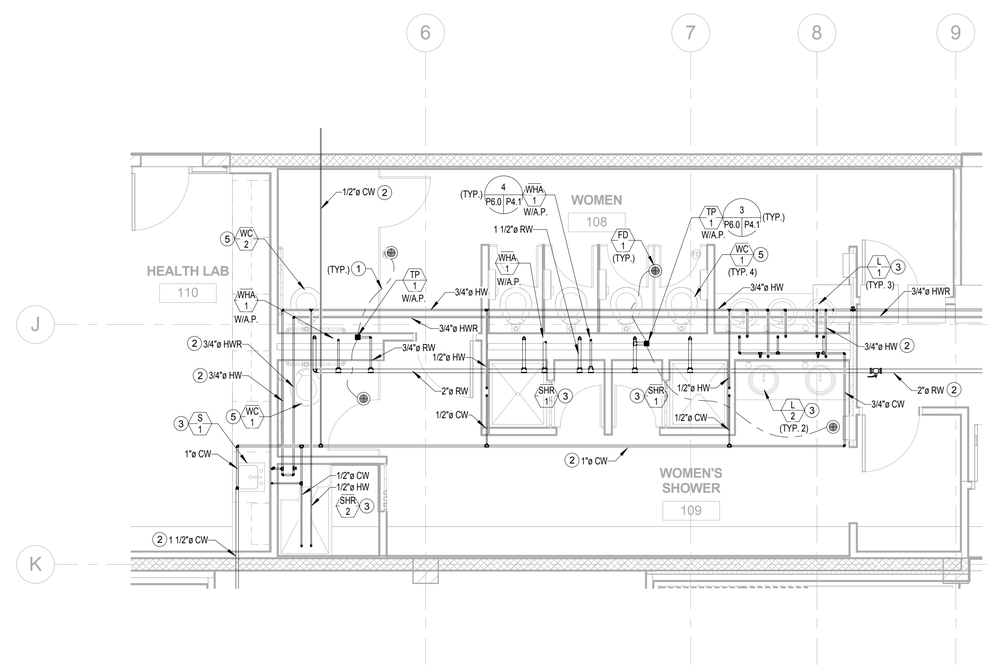

KEY NOTES

1. PIPING BELOW FLOOR.
2. PIPING ABOVE CEILING.
3. 1/2" HW & CW DOWN.
4. 1-1/4" RECLAIMED WATER SUPPLY DOWN.
5. 1-1/2" RECLAIMED WATER SUPPLY DOWN.

ENLARGED WOMEN'S RESTROOM AND SHOWER - HOT AND COLD WATER PLAN

SCALE: 1/4" = 1'-0" (1 / P2.2 / P4.1)

REGISTERED PROFESSIONAL ENGINEER — DONN C. GILMORE — No. 11541 — Exp. 9-30-11 — MECHANICAL — STATE OF CALIFORNIA

DONN C. GILMORE & ASSOCIATES, INC.
Consulting Mechanical and Electrical Engineers
DCGA
4051 E. La Palma Ave., Ste. A
Anaheim, CA 92807
Ph.: 714.630.4291
Fax: 714.630.4805

DATE	SYM	REVISION	BY	A'PD

NATIONAL AERONAUTICS AND SPACE ADMINISTRATION

DRYDEN FLIGHT RESEARCH CENTER
EDWARDS, CA

DRAWING TITLE

PLUMBING ENLARGED PLANS

PROJECT TITLE

FACILITIES SUPPORT CENTER BUILDING
100% FINAL DESIGN SUBMITTAL

APPROVALS	DATE
Chief, Facilities Engineering & Asset Mgmt. Office DAN CROWLEY	4/14/11
Project Requestor /Customer DAN CROWLEY	4/14/11
Facilities Project Manager GEMMA FLORES	4/14/11
Chief, Office of Protective Services JOHN ZELLMER	4/14/11
Chief - Safety, Health, and Environmental Office DAN MULLEN	4/14/11
DFRC Chief Information Officer KEN NORLIN	4/19/11

DATE STRTD	11/08/10	DATE PRNTD	03/14/11
DRAWN BY		EDM-1703	
SCALE	AS NOTED	TRADE SH. No.	P4.1
FILE NAME		SHEET No. 152 of 193	

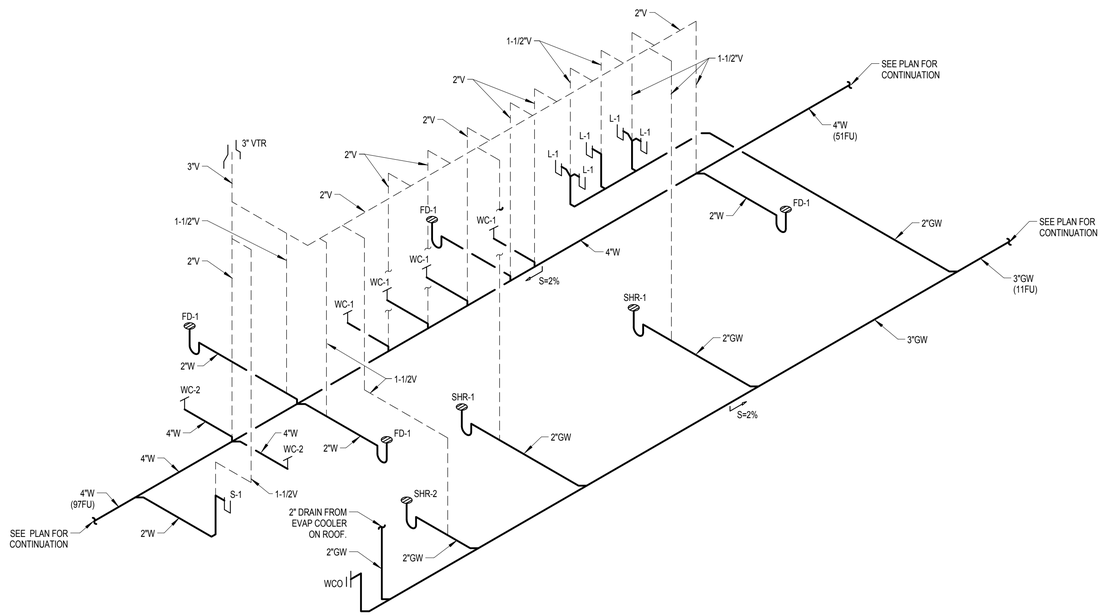

WASTE AND VENT PIPING - WOMEN'S RESTROOM | SCALE: NONE | 3 | P4.1 | P5.0

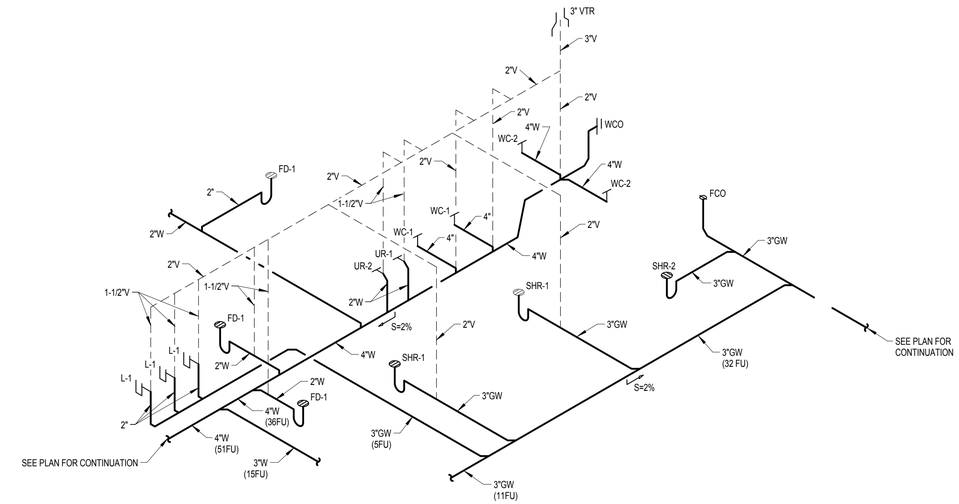

WASTE AND VENT PIPING - MEN'S RESTROOM | SCALE: NONE | 1 | P4.0 | P5.0

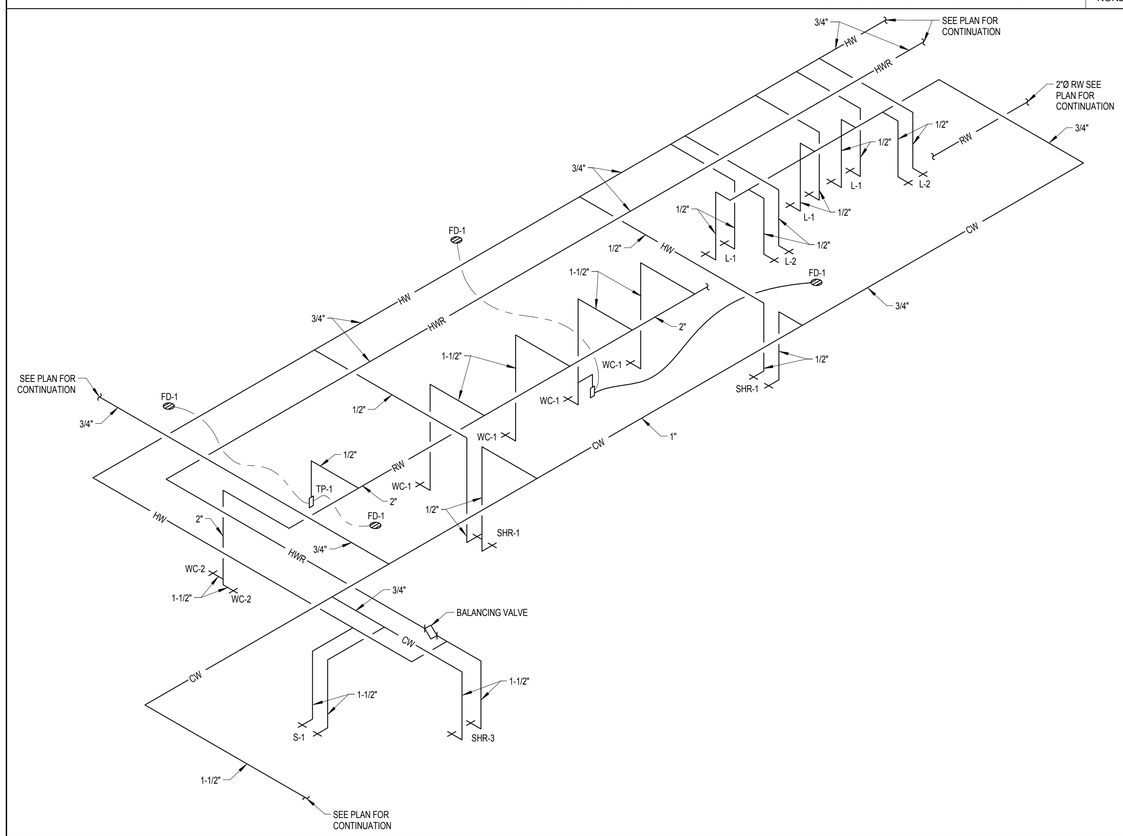

DOMESTIC HOT & COLD WATER, RECLAIMED WATER PIPING - WOMEN'S RESTROOM | SCALE: NONE | 4 | P4.1 | P5.0

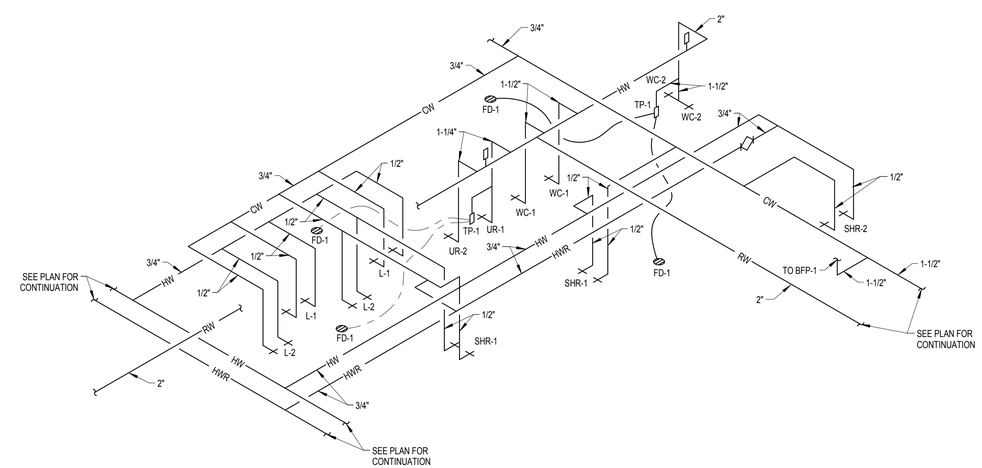

DOMESTIC HOT & COLD WATER, RECLAIMED WATER PIPING - MEN'S RESTROOM | SCALE: NONE | 2 | P4.0 | P5.0

REGISTERED PROFESSIONAL ENGINEER DONN C. GILMORE No. 11541 Exp. 9-30-11 MECHANICAL STATE OF CALIFORNIA

DONN C. GILMORE & ASSOCIATES, INC.
Consulting Mechanical and Electrical Engineers
DCGA
4051 E. La Palma Ave., Ste. A
Anaheim, CA. 92807
Ph.: 714.630.4291
Fax: 714.630.4805

DATE	SYM	REVISION	BY	A'PD

NATIONAL AERONAUTICS AND SPACE ADMINISTRATION
DRYDEN FLIGHT RESEARCH CENTER
EDWARDS, CA

DRAWING TITLE
PLUMBING PIPING DIAGRAMS

PROJECT TITLE
FACILITIES SUPPORT CENTER BUILDING
100% FINAL DESIGN SUBMITTAL

APPROVALS	DATE
Chief, Facilities Engineering & Asset Mgmt. Office DAN CROWLEY	4/14/11
Project Requestor /Customer DAN CROWLEY	4/14/11
Facilities Project Manager GEMMA FLORES	4/14/11
Chief, Office of Protective Services JOHN ZELLMER	4/14/11
Chief - Safety, Health, and Environmental Office DAN MULLEN	4/14/11
DFRC Chief Information Officer KEN NORLIN	4/19/11

DATE STRTD	11/08/10	DATE PRNTD	03/14/11
DRAWN BY		EDM-1703	
SCALE	AS NOTED	TRADE SH. No.	P5.0
FILE NAME		SHEET No. 153 of 193	

PIPE SIZING AND SELECTION TABLE		
PPP SIZE	FIXTURE UNITS	CROSS REF. PDI
1/2"	1-11	SC-500
3/4"	12-32	SC-750
1"	33-60	SC-1000
1-1/4"	61-113	SC-1250
1-1/2"	114-154	SC-1500
2"	155-330	SC-2000

NOTE:

FINAL SIZING AND MODEL SELECTION SHALL BE PER MANUFACTURERS RECOMMENDATIONS.

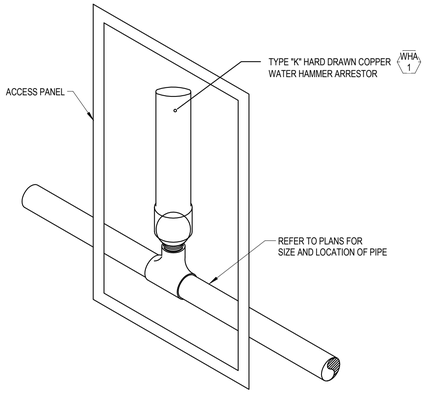

WATER HAMMER ARRESTOR DETAIL

SCALE: NONE | 4 | P4.1 | P6.0

FLOOR DRAIN TRAP PRIMER DISTRIBUTION CHART				
NO. OF DRAINS	PRIMER MODEL	MAX. WATER DEL. ON 15 SEC. PRESS. DROP.	USE STAND PIPE STYLE	DISTRIBUTION UNIT IS
1	MR-500	2 OZ	STRAIGHT	NOT REQUIRED
2	MR-500	2 OZ.	STRAIGHT	2 OPENING

NOTE:

PROVIDE MAINTENANCE/ INSPECTION ACCESS FOR TRAP PRIMER VALVE AND DISTRIBUTION BOX.

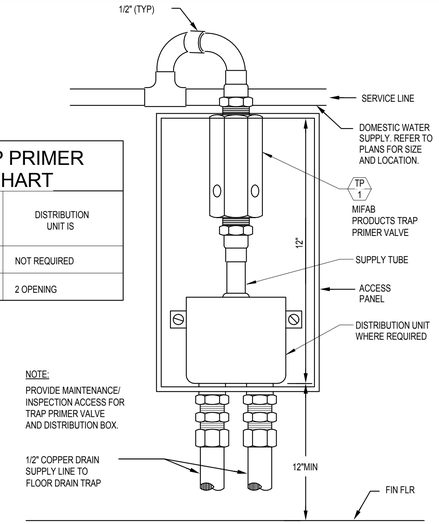

PLUMBING TRAP PRIMER DETAIL

SCALE: NONE | 3 | P4.0 | P6.0

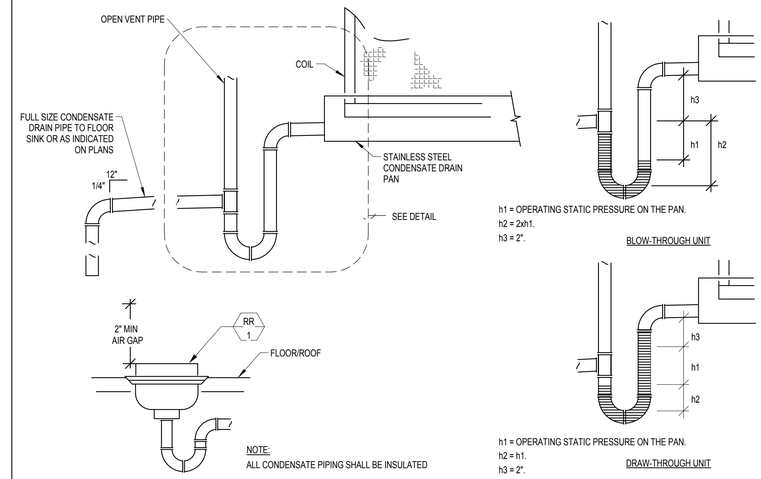

NOTE:

ALL CONDENSATE PIPING SHALL BE INSULATED

PLUMBING CONDENSATE DRAIN DETAIL

SCALE: NONE | 2 | P2.5 | P6.0

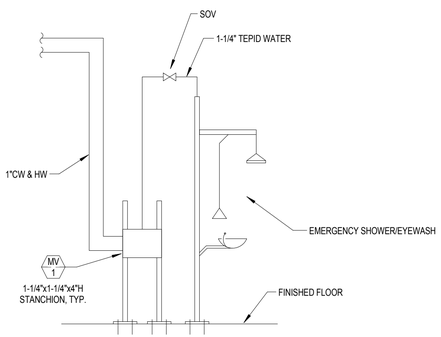

WATER SUPPLY TO EMERGENCY SHOWER/EYEWASH

SCALE: NONE | 5 | P2.2 | P6.0

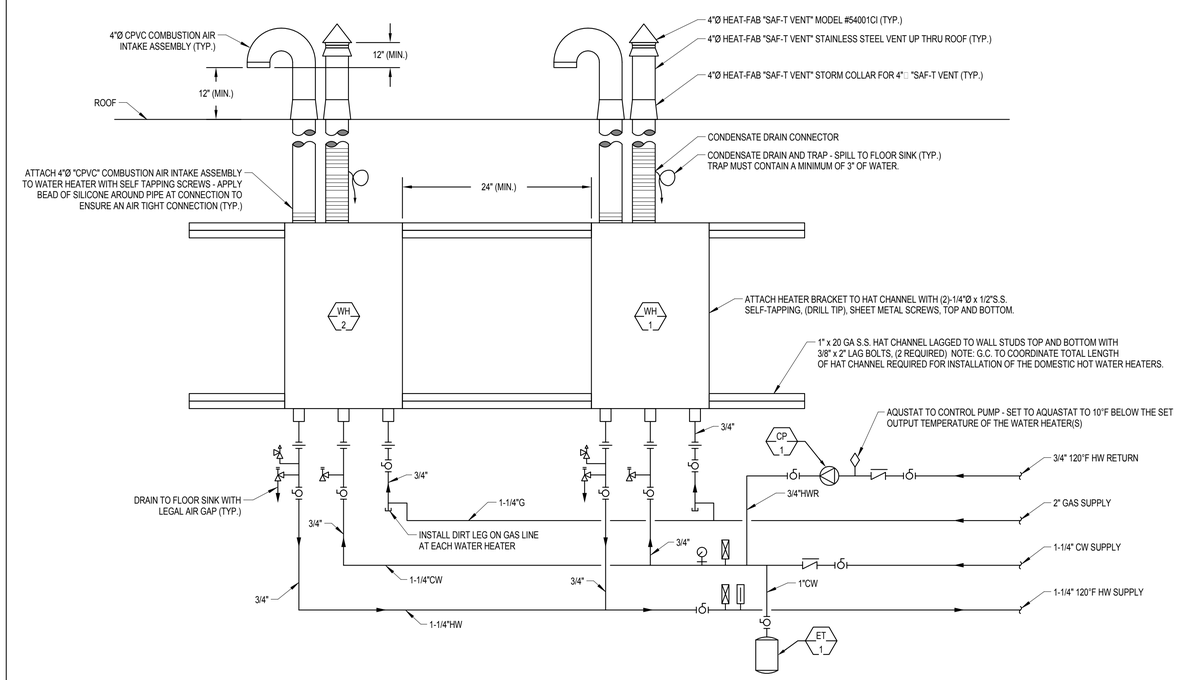

SYMBOLS LEGEND

- AQUASTAT HONEYWELL MODEL #L6006A OR L600DC
- BALL VALVE
- BOILER DRAIN VALVE
- CHECK VALVE
- PRESSURE GAUGE
- PRESSURE RELIEF VALVE
- RE-CIRCULATING PUMP
- TEMPERATURE GAUGE
- UNION
- VACUUM RELIEF VALVE

NOTES:

1. SET WATER HEAT AT 120°F (MIN.)
2. EXPANSION TANK IS PROVIDED AND INSTALLED BY THE PLUMBING CONTRACTOR.
3. INSTALL WATER HEATER CONTROL PANEL(S) ON WALL NEXT TO WATER HEATERS.

GAS FIRED TANKLESS WATER HEATER PIPING DETAIL

SCALE: NONE | 1 | P2.7 | P6.0

REGISTERED PROFESSIONAL ENGINEER DONN C. GILMORE No. 11541 Exp. 9-30-11 MECHANICAL STATE OF CALIFORNIA

DONN C. GILMORE & ASSOCIATES, INC.
Consulting Mechanical and Electrical Engineers
DCGA
4051 E. La Palma Ave., Ste. A
Anaheim, CA. 92807
Ph.: 714.630.4291
Fax: 714.630.4805

DATE	SYM	REVISION	BY	A'PD

NATIONAL AERONAUTICS AND SPACE ADMINISTRATION

DRYDEN FLIGHT RESEARCH CENTER
EDWARDS, CA

DRAWING TITLE

PLUMBING DETAILS

PROJECT TITLE

FACILITIES SUPPORT CENTER BUILDING
100% FINAL DESIGN SUBMITTAL

APPROVALS	DATE
Chief, Facilities Engineering & Asset Mgmt. Office DAN CROWLEY	4/14/11
Project Requestor /Customer DAN CROWLEY	4/14/11
Facilities Project Manager GEMMA FLORES	4/14/11
Chief, Office of Protective Services JOHN ZELLMER	4/14/11
Chief - Safety, Health, and Environmental Office DAN MULLEN	4/14/11
DFRC Chief Information Officer KEN NORLIN	4/19/11

DATE STRTD	11/08/10	DATE PRNTD	03/14/11
DRAWN BY		EDM-1703	
SCALE	AS NOTED	TRADE SH. No.	P6.0
FILE NAME		SHEET No. 154 of 193	

ANNOTATIONS

1 — DETAIL REFERENCE NUMBER
E2 E6 — SHEET DETAIL IS SHOWN ON
SHEET ON WHICH DETAIL IS TAKEN

3 / 93 / 2 — LIGHTING FIXTURE CALL OUT, "3" INDICATES FIXTURE TYPE (REFER TO LIGHTING FIXTURE SCHEDULE), NUMBER ADJACENT INDICATES QUANTITIES (NUMBER IS SHOWN FOR BRANCH CIRCUIT PURPOSES ONLY, NOT FOR MATERIAL TAKE-OFF). NUMBER "93" INDICATES FIXTURE WATTS

2 — PLAN NOTE REFERENCE, REFER TO NOTES ON SHEET, OR AS DIRECTED.

4 — REVISION REFERENCE.

ABREVIATIONS

A/C	ASPHALT CONCRETE
ADA	AMERICAN WITH DISABILITIES ACT
A.F.F.	ABOVE FINISH FLOOR
A.F.G.	ABOVE FINISH GRADE
AWG	AMERICAN WIRE GAUGE
AMP, A	AMPERE
A.I.C.	AMPERES INTERRUPTING CAPACITY (SYMMETRICAL)
AF/AT	AMP FRAME, AMP TRIP
AS/AF	AMP SWITCH, AMP FUSE
CIRC.,CKT.	CIRCUIT
CB	CIRCUIT BREAKER
C	CONDUIT
CM	CENTIMETER
C.O.	CONDUIT ONLY, COMPLETE WITH PULLSTRING
CONN	CONNECTED
CPT	CONTROL POWER TRANSFORMER
CLCB	CURRENT LIMITING CIRCUIT BREAKER
CLF	CURRENT LIMITING FUSE
CT	CURRENT TRANSFORMER
DEMO	DEMOLISH
DIA	DIAMETER
E.C.	ELECTRICAL CONTRACTOR
EMS	ENERGY MANAGEMENT CONTROL SYSTEM
EMT	ELECTRICAL METALLIC TUBING
ENT	ELECTRICAL NON-METALLIC TUBING
EWC	ELECTRIC WATER COOLER
E-O-L	END-OF-LINE CIRCUIT TERMINATOR.
EF	EXHAUST FAN
E/G	EQUIPMENT GROUND (GREEN)
E	EXISTING EQUIPMENT
EP	EXPLOSION PROOF
ETR	EXISTING TO REMAIN
FA	FIRE ALARM
FLA	FULL LOAD AMPS
GFCI	GROUND FAULT CIRCUIT INTERRUPTER.
GRD	GROUND
GRY	GRAY
HOA	HAND-OFF-AUTO
HVAC	HEATING, VENTILATING AND AIR CONDITIONING
H.,W.,D.,L.	HEIGHT, WIDTH, DEPTH, LENGTH
HID	HIGH INTENSITY DISCHARGE
HP	HORSEPOWER
HPS	HIGH PRESSURE SODIUM
I/G	ISOLATED GROUND
JBOX	JUNCTION BOX
K	DEGREE KELVIN
KVA	KILOVOLT AMPERES
KW	KILOWATT
LCL	LONG CONTINUOUS LOAD
L.F.	LINEAR FEET
LTG, LTS	LIGHTING
LPS	LOW PRESSURE SODIUM
MAX.	MAXIMUM
MCB	MAIN CIRCUIT BREAKER
MIN.	MINIMUM
MLO	MAIN LUGS ONLY
MM	MILLIMETER
MV	MERCURY VAPOR
MH	METAL HALIDE
MCC	MOTOR CONTROL CENTER
MCM	THOUSAND CIRCULAR MILS
MCP	MOTOR CIRCUIT PROTECTOR
MFR.	MANUFACTURER
MTD	MOUNTED
MW	MICROWAVE
NEC	NATIONAL ELECTRICAL CODE
NC	NORMALLY CLOSED
NO	NORMALLY OPENED
NF	NON-FUSED
NIC	NIGHT LIGHTRACT
NO. or #	NUMBER
OFCI	OWNER FURNISHED, CONTRACTOR INSTALLED.
P	POLE
PC	PHOTOCELL
PRIMARY	OVER 600 VOLTS
PH. or ∅	PHASE
PROVIDE	FURNISH, INSTALL AND CONNECT.
PT	POTENTIAL TRANSFORMER
PA	PUBLIC ADDRESS
REC, RECEPT	RECEPTACLE
REF	REFRIGERATOR
RE	RELOCATE EXISTING
RGS	RIGID GALVANIZED STEEL
SECONDARY	600 VOLTS AND LESS
SQ.	SQUARE
TC	TIMECLOCK
TEL/DATA	TELEPHONE AND DATA
TV	TELEVISION
TYP	TYPICAL
U.O.N.	UNLESS OTHERWISE NOTED
UPS	UNINTERRUPTIBLE POWER SUPPLY
V	VOLTS
VA	VOLT AMPERES
WP	WEATHERPROOF
W	WIRE

GENERAL NOTES:

1. CONDUIT SIZES CALLED OUT ON DRAWINGS ARE NOT NECESSARILY BASED ON THE MINIMUM SIZE ALLOWED BY THE NATIONAL ELECTRICAL CODE AND MAY BE PURPOSELY OVERSIZED FOR EASE OF CONDUCTOR PULLING OR TO AVOID EXCESS CONDUCTOR HEATING. IN NO CASE SHALL CONDUIT SIZE BE SMALLER THAN IS REQUIRED BY THE NATIONAL ELECTRICAL CODE.
2. PROVIDE AND INSTALL JUNCTION AND PULL BOXES REQUIRED FOR THE INSTALLATION OF ELECTRICAL DEVICES AND EQUIPMENT, WHETHER OR NOT SPECIFICALLY INDICATED ON THE PLANS. SIZE OF THESE BOXES SHALL BE PER THE NATIONAL ELECTRICAL CODE.
3. FURNISH EQUIPMENT FOR TEMPORARY CONSTRUCTION POWER AS REQUIRED.
4. PENETRATIONS THROUGH FIRE BARRIERS SHALL BE FIRE STOPPED TO MAINTAIN THE INTEGRITY OF THE FIRE BARRIER. FIRE STOPPING MATERIAL SHALL BE U.L. LISTED.
5. OBTAIN APPROVAL FROM THE CONTRACTING OFFICER BEFORE DRILLING PENETRATION THROUGH STRUCTURAL MEMBERS OR FIRE RATED WALLS AND SLABS.
6. SHOULD PROJECT CONDITIONS REQUIRE REARRANGEMENT OF WORK, MARK SUCH CHANGES ON THE AS-BUILT DRAWINGS. IF THESE CHANGES REQUIRE ALTERNATE METHODS TO THOSE SPECIFIED IN THE CONTRACT DOCUMENTS, SUBMIT DRAWINGS SHOWING THE PROPOSED ALTERNATE METHODS TO THE CONTRACTING OFFICER. DO NOT PROCEED UNTIL APPROVAL IS OBTAINED. REARRANGEMENT OF WORK FOR THE PURPOSE OF COORDINATION SHALL NOT BE CONSIDERED AN ITEM FOR EXTRA COST.
7. SUBMIT SHOP DRAWINGS IN ACCORDANCE WITH THE CONTRACT DOCUMENTS. TESTING SHALL BE DONE IN ACCORDANCE WITH THE CONTRACT DOCUMENTS. SUBMIT A COPY OF SHOP DRAWINGS TO THE CONTRACTING OFFICER FOR INFORMATION.
8. PROVIDE TESTING BY OPERATING THE INSTALLATION AND RUNNING TESTS TO DEMONSTRATE ITS OPERATIONS AND COMPLIANCE WITH THE EQUIPMENT SPECIFICATIONS TEST ALL WIRING AND EQUIPMENT TO INSURE PROPER OPERATION ACCORDING TO FUNCTIONS SPECIFIED HEREIN AND ON THE DRAWINGS.
9. WARRANTY:
   WORK IN THIS SECTION SHALL BE UNDER WARRANTY FOR A PERIOD OF ONE YEAR FROM THE DATE OF ACCEPTANCE OF THE WORK AS A WHOLE BY THE CONTRACTING OFFICER. SHOULD EQUIPMENT OR MATERIAL FAIL WITHIN THIS PERIOD, REPLACE OR REPAIR THAT ITEM AT NO COST FOR MATERIAL AND/OR SERVICES IF SUCH IS DUE TO FAULTY WORKMANSHIP OR QUALITY OF MATERIAL FURNISHED.
   THE CONTRACTOR SHALL BE RESPONSIBLE FOR DAMAGE TO OF THE PREMISES CAUSED BY FAILURE IN THE EQUIPMENT FURNISHED AS PART OF THE CONTRACT DRAWINGS FOR A PERIOD OF ONE YEAR AFTER THE FINAL ACCEPTANCE OF THE WORK AS A WHOLE.
10. MECHANICAL CONTROL SYSTEMS EQUIPMENT SHALL BE PROVIDED, INSTALLED AND WIRED BY THE MECHANICAL CONTRACTOR PER THE CONTRACT DOCUMENTS. MECHANICAL CONTRACTOR SHALL PROVIDE CONDUITS FOR CONTROL WIRING FROM DDS CONTROLLER TO MECHANICAL UNITS, ELECTRICAL POWER FOR THE MECHANICAL CONTROL SYSTEM EQUIPMENT SHALL BE PROVIDED BY THE ELECTRICAL CONTRACTOR. THIS INCLUDES THE POWER WIRING, AND CONNECTION TO THE MECHANICAL CONTROL SYSTEMS EQUIPMENT. ELECTRICAL CONTRACTOR SHALL PROVIDE CONDUITS FOR MECHANICAL THERMOSTAT TO VAV BOX CONNECTION.
11. EQUIPMENT SHALL BE DESIGNED AND INSTALLED FOR USE IN A SEISMIC ZONE 4 AREA. SEISMIC DESIGN SHALL BE STAMPED AND SIGNED BY A PROFESSIONAL STRUCTURAL ENGINEER LICENSED IN THE STATE OF CALIFORNIA.
12. TONE AND LOCATE UTILITY LINES WITHIN THE PROJECT AREA PRIOR TO START OF EXCAVATION IN ORDER TO AVOID DAMAGE TO EXISTING UNDERGROUND UTILITIES. REPAIR DAMAGE TO EXISTING UTILITIES AT NO COST TO OWNER.
13. PATCH AND PAINT EXPOSED ELECTRICAL MATERIAL, INCLUDING CONDUIT, SURFACE METAL RACEWAYS, JUNCTION BOXES, PANELS, AND DEVICES TO MATCH THE ADJACENT SURFACES IN TEXTURE AND COLOR.
14. REPAIR DAMAGE TO EXISTING CONSTRUCTION RESULTING FROM THE INSTALLATION OF ELECTRICAL ITEMS. THE AREAS REPAIRED SHALL MATCH THE ADJACENT SURFACES IN TEXTURE AND COLOR.
15. PROVIDE DEWATERING EFFORT FOR NEW BELOW GRADE EXCAVATION/TRENCHING IF GROUND WATER IS ENCOUNTERED. OBTAIN A DIGGING PERMIT BEFORE ANY EXCAVATION OR TRENCHING.
16. ELECTRICAL SPLICES SHALL BE WATERPROOF.
17. MOUNTING HARDWARE, CHANNELS AND FASTENING DEVICES IN EXTERIOR LOCATIONS SHALL BE 316 STAINLESS STEEL UNLESS NOTED.
18. PROVIDE A COMPLETE AND OPERATING ELECTRICAL SYSTEM. PROVIDE SHALL MEAN "FURNISH AND INSTALL". WORK INCLUDES INSTALLATION OF ELECTRICAL EQUIPMENT AND SYSTEMS, INCLUDING FURNISHED BY OWNER OR OTHER TRADES, COMPLETE AND OPERATIONAL TO THE SATISFACTION OF THE CONTRACTING OFFICER, AS LIMITED BY THE INTENT OF THE CONTRACT DOCUMENTS.
19. COMPLY WITH THE CONSTRUCTION PRACTICES AND REQUIREMENTS OF THE LATEST EDITION OF THE NATIONAL ELECTRIC CODE (NFPA 70), NATIONAL ELECTRICAL SAFETY CODE, AMERICAN ELECTRICIANS HANDBOOK BY CROFT EDISON ELECTRIC INSTITUTE, AMERICANS WITH DISABILITIES ACT, APPLICABLE INSTRUCTIONS OF MANUFACTURERS OF EQUIPMENT AND MATERIALS SUPPLIED FOR THE PROJECT, AND ORDINANCES, RULES AND POLICIES OF THE STATE AND COUNTY IN WHICH THE WORK IS TO BE PERFORMED.
20. VISIT THE JOB SITE AND BECOME FAMILIAR HIMSELF WITH EXISTING CONDITIONS AND THE EXTENT OF REMOVAL, RELOCATION, RECONNECTION AND/OR NEW WORK PRIOR TO BIDDING. BID SUBMISSION SHALL BE RESOLVED ALL DISCREPANCIES AND QUESTIONS AND NO EXTRA PAYMENT WILL BE AUTHORIZED FOR WORK MADE NECESSARY BY FAILURE TO DO SO.
21. CIRCUITS SHALL INCLUDE AN INSULATED GREEN GROUNDING CONDUCTOR, SIZED PER THE NATIONAL ELECTRICAL CODE. THIS CONDUCTOR SHALL BE CARRIED IN RACEWAYS INCLUDING THOSE INSTALLED FOR SWITCH LEGS AND SHALL BE ATTACHED TO THE DEVICE OR EQUIPMENT HOUSING USING A SUITABLE GROUNDING LUG.
22. AT COMPLETION OF CONSTRUCTION, PROVIDE A COPY OF AS-BUILT DRAWINGS ON CD-ROM TO THE CONTRACTING OFFICER.
23. SAWCUT EXISTING AC PAVEMENT/SIDEWALK FOR NEW UNDERGROUND DUCTLINE INSTALLATIONS. PATCH AND REPAIR AC PAVEMENT/SIDEWALK TO MATCH EXISTING ADJACENT SURFACES. AT NON-PAVED AREAS, RESTORE SURFACES TO MATCH EXISTING ADJACENT SURFACES.
24. COORDINATE AND SCHEDULED OUTAGES WITH THE CONTRACTOR OFFICE AT LEAST (3) WEEKS IN ADVANCE OF REQUESTED OUTAGE IN WRITING. CONTRACTOR SHALL BE RESPONSIBLE FOR PROVIDING GENERATOR SUPPORT FOR SCHEDULED ELECTRICAL OUTAGE DUE TO CONSTRUCTION CONTRACT WORK.
25. ELECTRICAL CONDUCTORS FOR DISTRIBUTION AT 480 VOLTS AND BELOW SHALL BE THHN, 90°C INSULATION EXCEPT WHERE SPECIFIED ON SINGLE LINE DIAGRAM TO INSTALL DLO TYPE RHH/RHW-2 90°C CONDUCTORS.
26. MINIMUM CONDUCTOR SIZE SHALL BE #12 AWG FOR BOTH POWER AND CONTROL CIRCUITS.
27. OBTAIN CONFINED SPACE PERMIT FROM NASA PRIOR TO ENTRY OF UNDER GROUND MANHOLES AND VAULTS. SUBMIT A CONFINED SPACE PLAN. EMPLOYEE CERTIFICATIONS AND THE AIR MONITORING EQUIPMENT MUST HAVE A CURRENT CALIBRATION STICKER ON THE DEVICE BEFORE PERMITS WILL BE ISSUED TO THE CONTRACTOR.
28. GOVERNMENT RESERVES THE RIGHT TO WITNESS FACTORY TESTING. NOTIFY GOVERNMENT 30 CALENDAR DAYS PRIOR TO EQUIPMENT FACTORY TESTS FOR GOVERNMENT REPRESENTATIVE ATTENDANCE.

SINGLE LINE DIAGRAM SYMBOLS

- {52} — 15KV RATED DRAWOUT VACUUM CIRCUIT BREAKER.
- LOW VOLTAGE DRAWOUT METAL CLAD CIRCUIT BREAKER.
- FIXED MOUNTED LOW VOLTAGE CIRCUIT BREAKER.
- DISCONNECT SWITCH, RATED AS INDICATED.
- DRAW OUT FUSE, RATED AS INDICATED.
- SURGE ARRESTER.
- GROUND CONNECTION.
- TRANSFORMER, RATING AS INDICATED.
- METER — DIGITAL AMMETER, VOLTMETER, KILOWATT METER AS NOTED.
- CURRENT TRANSFORMER.
- DRAW OUT TYPE POTENTIAL TRANSFORMER.
- PANEL — CIRCUIT BREAKER PANELBOARD, RATED PER SCHEDULE.
- G — ENGINE GENERATOR, RATED AS INDICATED.
- TVSS — TRANSIENT VOLTAGE SURGE SUPPRESSER.
- PLC — PROGRAMMABLE LOGIC CONTROLLER.
- GND BUS — GROUND BUSS, EQUIPMENT ENCLOSURE OR WALL MOUNTED.

POWER SYMBOLS

- DUPLEX RECEPTACLE, IN FLOOR BOX.
- DOUBLE DUPLEX RECEPTACLE, RECESSED WALL MOUNTED AT +18" A.F.F. OR AS NOTED.
- DUPLEX, GFCI RECEPTACLE, RECESSED WALL MOUNTED AT +18" A.F.F. OR AS NOTED.
- SINGLE RECEPTACLE, RECESSED WALL MOUNTED AT +18" A.F.F. OR AS NOTED.
- DUPLEX RECEPTACLE, RECESSED WALL MOUNTED AT +18" A.F.F. OR AS NOTED.
- SINGLE RECEPTACLE, SURFACE MOUNTED AT +18" A.F.F. TO BOTTOM, 50A, 250V, 2-POLE, 3-WIRE, NEMA TYPE 6-50R.
- SINGLE RECEPTACLE, SURFACE MOUNTED AT +18" A.F.F. TO BOTTOM, 30A, 250V, 2-POLE, 3-WIRE, NEMA 10-30R.
- SINGLE RECEPTACLE, SURFACE MOUNTED AT 18" A.F.F. TO BOTTOM U.O.N, 30A, 250V, 3-POLE, 4-WIRE, NEMA 14-30.
- DUPLEX RECEPTACLE RECESSED MOUNTED 6" ABOVE COUNTER OR BACKSPLASH. 20A , 125V. 2-POLE, 3 WIRE, NEMA 5-20R, ISOLATED GROUND, AS NOTED.
- GFCI DUPLEX RECEPTACLE RECESSED MOUNTED 6" ABOVE COUNTER OR BACKSPLASH. 20A , 125V. 2-POLE, 3 WIRE, NEMA 5-20R.
- CROUSE-HINDS ARKTITE RECEPTACLE ASSEMBLY AREA6425, WITH BACK BOX, ANGLE ADDAPTER, RATED 60A, 600V, 3-POLE, 4-WIRE.
- CROUSE-HINDS ARKTITE RECEPTACLE AR642 RATED 60A, 600V, 3-POLE, 4-WIRE. MOUNTED 6" ABOVE COUNTER.
- J — JUNCTION BOX, RECESSED WALL MOUNTED AT +18" A.F.F. OR AS NOTED. 4S/DP MINIMUM OR AS REQUIRED BY N.E.C..
- J — JUNCTION BOX, MOUNTED IN ACCESSIBLE CEILING FOR APPLICATION DENOTED ON PLAN. 4S/DP MINIMUM OR AS REQUIRED BY N.E.C..
- J — JUNCTION BOX, FLOOR RECESSED MOUNTED, WITH FLUSH COVER PLATE.
- SINGLE POLE SWITCHES, WALL MOUNTED AT +48" A.F.F. (CENTER OF SWITCH). 4S/DP MINIMUM OR AS REQUIRED BY NEC.
- EXHAUST FAN, OR MOTOR LOAD. REFER TO MECHANICAL, PLUMBING OR KITCHEN DRAWINGS FOR SPECIFIC LOAD REQUIREMENTS OR AS NOTED.
- FLUSH MOUNTED ELECTRICAL PANELBOARD OR LOAD CENTER. REFER TO PANEL SCHEDULE.
- SURFACE MOUNTED ELECTRICAL PANELBOARD OR LOAD CENTER. REFER TO PANEL SCHEDULE.
- T — TRANSFORMER, REFER TO SINGLE LINE DIAGRAM.
- F — FUSED DISCONNECT SWITCH, HP RATED WITH FUSES PER EQUIPMENT MANUFACTURER AND WEATHERPROOF AS REQUIRED. PROVIDE FINAL CONNECTION TO UNIT EQUIPMENT.
- NON-FUSED DISCONNECT SWITCH, HP RATED AND WEATHERPROOF AS REQUIRED. PROVIDE FINAL CONNECTION TO UNIT EQUIPMENT.

POWER SYMBOLS

- GROUND CONNECTION, SIZE AS INDICATED OR AS REQUIRED.
- $S_{a,b}$ — SUBSCRIPTS AT SYMBOL INDICATE THE FOLLOWING:
  P - PILOT LIGHT 2 - DOUBLE POLE
  R - REMOTE CONTROL 3 - THREE WAY
  M - MOTOR STARTING 4 - FOUR WAY
  RL - ROTARY LOCK KEY TYPE K - KEY OPERATED
  PB - PUSHBUTTON LV - LOW VOLTAGE
  a, b, c, ETC. - DESIGNATES QUANTITY OF SWITCHES AT EACH LOCATION.
  NOTE: ALL WALL SWITCHES CONTROLLING EMERGENCY CIRCUITS SHALL BE ENGRAVED WITH "EMERGENCY"
- P — PULL BOX, SIZED AS INDICATED. LETTER "P" OR "C" INDICATES POWER OR COMMUNICATIONS CIRCUITS.
- M — MANHOLE, SIZED AS INDICATED. LETTER "P" OR "C" INDICATES POWER OR COMMNICATIONS CIRCUITS.
- GROUND WELL.
- OCCUPANCY SENSOR, DUAL TECHNOLOGY CEILING MOUNTED PER PLAN. PROVIDE SWITCH PACKS AS REQUIRED FOR SINGLE AND MULTIPLE UNITS PER ROOM.
- OCCUPANCY SENSOR, WALL MOUNTED AT +48" A.F.F. (CENTER OF SWITCH) WITH BI-LEVEL SWITCH INTEGRATED.
- DAYLIGHTING SENSOR
- PHOTOVOLTAIC PANEL 230W, 37.4VDC OUTPUT

BRANCH CIRCUIT SYMBOLS

- A-1,3,5 — HOME RUN TO PANEL. LETTER DESIGNATES PANEL, NUMBERS INDICATE CIRCUITS. UNLESS OTHERWISE NOTED.
- CONCEALED BRANCH CIRCUIT UNLESS OTHERWISE NOTED.
- CONDUIT RUN CONCEALED BELOW GRADE, 1" C MINIMUM WITH CODE SIZED EQUIPMENT GROUND.
- CONDUIT STUB OUT, CAP, MARK AND RECORD.
- CONDUIT CONTINUATION.
- INDICATES FLEXIBLE CONNECTION TO EQUIPMENT. NUMBER OF CONDUCTORS AS REQUIRED.

TELEPHONE/DATA SYMBOLS

- COMBINATION TELEPHONE AND DATA OUTLET BOX, RECESSED WALL MOUNTED AT +18" A.F.F. PROVIDE (2) 3/4"C.O. (WITH PULL ROPE) UP TO CABLE TRAY ABOVE ACCESSIBLE CEILING SPACE, WITH BUSHINGS ON ENDS. PROVIDE OUTLET BOX DOUBLE-GANG DEEP (2 1/4") BOX WITH SINGLE-GANG MUD RING.
- COMBINATION TELEPHONE AND DATA OUTLET BOX, FLOOR MOUNTED ON IN-FLOOR RACEWAY. PROVIDE (2) 2" CONDUITS (WITH PULL ROPE) BETWEEN FLOOR OUTLET BOXES AND TO TECESSED WALL. MOUNTED 12" X 10" X 4" DEEP PULLBOX 18" ABOVE FINISHED FLOOR. ALSO PROVIDE (2) 2" CONDUITS (WITH PULL ROPE) FROM RECESSED WALL MOUNTED PULLBOX UP TO CABLE TRAY ABOVE ACCESSIBLE CEILING SPACE, WITH BUSHING ON ENDS. OUTLET BOX SHOULD BE 12" X 12" X 4" DEEP AT FLOOR PENITRATION.

SIGNAL SYSTEM SYMBOLS

- S — SMOKE DETECTOR, CEILING MOUNTED.
- D — DUCT DETECTOR, MECHANICAL SYSTEM CONTROL.

LIGHTING SYMBOLS

- LED RECESSED 2'x2' FIXTURE IN ACCESSIBLE CEILING. REFER TO LIGHTING FIXTURE SCHEDULE.
- LED RECESSED 2'x2' FIXTURE IN ACCESSIBLE CEILING. REFER TO LIGHTING FIXTURE SCHEDULE. WITH ENERGENCY BATTERY BACKUP
- LED PENDANT MOUNT LOW BAY FIXTURE.
- LED DOWNLIGHT EMERGENCY FIXTURE.
- LED DOWNLIGHT FIXTURE.
- EMERGENCY EGRESS FIXTURE.
- WALL SCONCE WITH EMERGENCY BATTERY BACK-UP FIXTURE.

LIGHT FIXTURE SCHEDULE

LUMINAIRE INFORMATION		LAMP INFORMATION		MISCELLANEOUS INFORMATION
TYPE	MANUFACTURER MODEL NO.	WATTS / VOLTS	QUANTITY, WATTAGE, TYPE	FIXTURE GENERAL DESCRIPTION
A 120	SOLERA #ORB5-120LED-277-WW-WH-LB (OR APPROVED EQUAL)	120W 277V	(120) 1W LEDS DIMMING DRIVER	LOW-BAY LED FIXTURE WITH ACRYLIC LENS AT BOTTOM, PENDANT MOUNTED WITH DIMMING DRIVER. TEMP:3500K 0-10V DIMMING CONTROL
B 60	MAXLITE #MLFP2X235 (OR APPROVED EQUAL)	60W 277V	(234) LEDS NON DIMMING DRIVER	FLAT PANEL 2'x2' LED FIXTURE, FOR T-BAR GRID, WITH INTEGRATED DRIVER, EDGE LEDS, ALUMINUM HOUSING/SINK. TEMP: 3500K.
BE 60	MAXLITE #MLFP2X235 EM (OR APPROVED EQUAL)	60W 277V	(234) LEDS NON DIMMING DRIVER	FLAT PANEL 2'x2' LED FIXTURE, FOR T-BAR GRID, WITH INTEGRATED DRIVER, EDGE LEDS, ALUMINUM HOUSING/SINK. TEMP: 3500K. W/EMERG. BATT. BACKUP
D 28	JUNO #TC922LED35K-2-20-WH-LB-27 (OR APPROVED EQUAL)	28W 277V	LED NON-DIMMING DRIVER	6" LED DOWNLIGHT WITH INTEGRATED DRIVER . TEMP: 3500K. FOR DAMP AND WET LOCATION
DE 28	JUNO #TC922LED35K-2-BR-20-WH-LB-27 (OR APPROVED EQUAL)	28W 277V	LED NON-DIMMING DRIVER	6" LED DOWNLIGHT WITH INTEGRATED DRIVER AND EMERGENCY BATTERY BACK-UP. TEMP: 3500K. FOR DAMP AND WET LOCASTION
E 100	NL1 #HIGH/LOW BAY 30 (80") (OR APPROVED EQUAL)	100W 277V	LED NON-DIMMING DRIVER	PENDANT MOUNT, 22" DIAMETER LED FIXTURE WITH ACRYLIC LENS, 80 DEGREE REFRACTION.
F 113	NL1 #HIGH/LOW BAY 30 (130") (OR APPROVED EQUAL)	113W 277V	LED NON-DIMMING DRIVER	PENDANT MOUNT, 22" DIAMETER LED FIXTURE WITH ACRYLIC LENS, 130 DEGREE REFRACTION.
G 85	BEGA #8214MH #896A ANCHOR	85W 277V	(1) 70W MH	PAD MOUNTED BOLLARD WITH MH LAMP. PROVIDE CONCRETE MOUNTING BASE AND ANCHOR KIT.
H 285	LSI #CH2HM-FT-250-HPS-F-MT-BLK #RPP2 (ROUND POLE PLATE) (OR APPROVED EQUAL)	285W 277V	(1) 250W HPS	7GA STEEL ROUND POLE (5"DIA x 24'L) WITH CONCRETE BASE. BASE COVER AND ANCHOR.
J 570	LSI #CH2HN-FT-HPS-F-MT-BLK #RPP2 (ROUND POLE PLATE) WITH DUAL HEADS, MOUNTING HARDWARE (OR APPROVED EQUAL)	570W 277V	(2) 250W HPS	7GA STEEL ROUND POLE (5"DIA x 24'L) WITH CONCRETE BASE. BASE COVER AND ANCHOR WITH DUAL HEADS.
K 1.1	Beghelli #CYC-SA-LR2-C-WCS-BA (OR APPROVED EQUAL)	1.1W 277V	LED NON-DIMMING DRIVER	CYCLONE EXIT SIGN WITH 90 MIN. BATTERY BACKUP
M 27	Beghelli #TA24-SE-UNV-AT-RTD (OR APPROVED EQUAL)	27W 277V	1 (24W) CF	TEMPESTA 24W CF FLUORESCENT EGRESS LIGHT WITH BATTERY BACKUP
N 45	LSI #CHWS-FT-26-CFL2-F-UE-PLP-BB (OR APPROVED EQUAL)	45W 277V	(2) 26W CF	WALL SCONCE WITH EMERGENCY BATTERY BACK-UP, PLATINUM COLOR, PC1277-BUTTON PHOTOCELL
R 60	MAXLITE #MLFP2X235 (OR APPROVED EQUAL)	60W 277V	(234) LEDS DIMMING DRIVER	FLAT PANEL 2'x2' LED FIXTURE, FOR T-BAR GRID, WITH INTEGRATED DRIVER, EDGE LEDS, ALUMINUM HOUSING/SINK. TEMP: 3500K. 0-10V DIMMING CONTROL
S 120	SOLERA #ORB5-120LED-277-WW-WH-LB (OR APPROVED EQUAL)	120W 277V	(120) 1W LEDS NON DIMMING DRIVER	LOW-BAY LED FIXTURE WITH ACRYLIC LENS, PENDANT MOUNTED. NON DIMMING DRIVER. TEMP:3500K
T 35	LSI #W44 4 1 32 SSOR EM UE (OR APPROVED EQUAL)	35W 277V	(1) 32W T8	WALL MOUNT FLUORESCENT FIXTURE WITH ELEC. BALLAST AND EMERGENCY BATTERY BACKUP.

REGISTERED PROFESSIONAL ENGINEER — KURT KAISER — No. E015151 — Exp. 6-30-12 — ELECTRICAL — STATE OF CALIFORNIA

DONN C. GILMORE & ASSOCIATES, INC.
Consulting Mechanical and Electrical Engineers
DCGA
4051 E. La Palma Ave., Ste. A
Anaheim, CA 92807
Ph.: 714.630.4291
Fax: 714.630.4805

DATE	SYM	REVISION	BY	A'PD

NATIONAL AERONAUTICS AND SPACE ADMINISTRATION
DRYDEN FLIGHT RESEARCH CENTER
EDWARDS, CA

DRAWING TITLE
ELECTRICAL NOTES, LEGEND AND ABBREVIATIONS

PROJECT TITLE
FACILITIES SUPPORT CENTER BUILDING
100% FINAL DESIGN SUBMITTAL

APPROVALS		DATE
Chief, Facilities Engineering & Asset Mgt Office DAN CROWLEY		4/14/11
Project Requestor /Customer DAN CROWLEY		4/14/11
Facilities Project Manager GEMMA FLORES		4/14/11
Chief, Office of Protective Services JOHN ZELLMER		4/14/11
Chief - Safety, Health, and Environmental Office DAN MULLEN		4/14/11
DFRC Chief Information Officer KEN NORLIN		4/14/11

DATE STRTD	11/08/10	DATE PRNTD	03/14/11
DRAWN BY		EDM-1703	
SCALE	AS NOTED	TRADE SH. No.	E0.1
FILE NAME		SHEET No. 155 of 193	

Branch Panel: L1

Location: Space 154
Supply From: LTG
Mounting: Surface
Enclosure: Type 1

Volts: 480/277 Wye
Phases: 3
Wires: 4

A.I.C. Rating: 65,000
Mains Type:
Mains Rating: 50 A
MCB Rating: 50 A

Notes:

CKT	Circuit Description	Trip	Poles	A		B		C		Poles	Trip	Circuit Description	CKT
1	Ltg. Rm's 200,205	20 A	1	1500	103					1	20 A	Ltg. Exit Ltg (2)	2
3	Ltg. Rm's 177 (Stairs)	20 A	1			400							4
5	Ltg. Rm's 200,205	20 A	1					1500					6
7													8
9													10
11													12
13													14
15													16
17													18
19													20
21													22
23													24
25													26
27													28
29													30
31													32
33													34
35													36
37													38
39													40
41													42
		Total Load:		1603 VA		400 VA		1500 VA					
		Total Amps:		6 A		1 A		5 A					

Legend:

Load Classification	Connected Load	Demand Factor	Estimated Demand	Panel Totals	
Lighting	22 VA	100.00%	22 VA		
Other	3400 VA	100.00%	3400 VA	**Total Conn. Load:**	3503 VA
Lighting - Dwelling Unit	81 VA	100.00%	81 VA	**Total Est. Demand:**	3503 VA
				Total Conn. Current:	4 A
				Total Est. Demand	4 A

Notes:

Branch Panel: L2

Location:
Supply From: LTG
Mounting: Surface
Enclosure: Type 1

Volts: 480/277 Wye
Phases: 3
Wires: 4

A.I.C. Rating: 65,000
Mains Type:
Mains Rating: 50 A
MCB Rating: 50 A

Notes:

CKT	Circuit Description	Trip	Poles	A		B		C		Poles	Trip	Circuit Description	CKT
1	Ltg. Rm's 103,104	20 A	1	806	1000					1	20 A	Ltg. Rm's 171,170,111	2
3	Ltg. Rm. 100	20 A	1			705	974			1	20 A	Ltg. Rm's 101,102	4
5	Ltg. Rm's 103,104	20 A	1					748	1000	1	20 A	Ltg. Rm's 106,107,115,114,113,112	6
7	Ltg. Site Lighting Bollards (14)	20 A	1	1190	311					1	20 A	Ltg. Rm's 102,106,107,170	8
9	Ltg. Site Lighting (5)	20 A	1			1425							10
11	Ltg. Site Lighting (6)	20 A	1					1710					12
13													14
15													16
17													18
19													20
21													22
23													24
25													26
27													28
29													30
31													32
33													34
35													36
37													38
39													40
41													42
		Total Load:		3307 VA		3104 VA		3458 VA					
		Total Amps:		12 A		11 A		12 A					

Legend:

Load Classification	Connected Load	Demand Factor	Estimated Demand	Panel Totals	
Lighting	2208 VA	100.00%	2208 VA		
Other	7328 VA	100.00%	7328 VA	**Total Conn. Load:**	9869 VA
Lighting - Dwelling Unit	243 VA	100.00%	243 VA	**Total Est. Demand:**	9892 VA
Lighting - Exterior	90 VA	125.00%	113 VA	**Total Conn. Current:**	12 A
				Total Est. Demand	12 A

Notes:

Branch Panel: L3

Location: Space 36
Supply From: LTG
Mounting: Surface
Enclosure: Type 1

Volts: 480/277 Wye
Phases: 3
Wires: 4

A.I.C. Rating: 65,000
Mains Type:
Mains Rating: 50 A
MCB Rating: 50 A

Notes:

CKT	Circuit Description	Trip	Poles	A		B		C		Poles	Trip	Circuit Description	CKT
1	Ltg. Rm's	20 A	1	1612									2
3	Ltg. Rm 120	20 A	1			945							4
5	Ltg. Rm 120	20 A	1					675					6
7	Ltg. Rm 120	20 A	1	528									8
9													10
11													12
13													14
15													16
17													18
19													20
21													22
23													24
25													26
27													28
29													30
31													32
33													34
35													36
37													38
39													40
41													42
		Total Load:		2140 VA		945 VA		675 VA					
		Total Amps:		8 A		3 A		2 A					

Legend:

Load Classification	Connected Load	Demand Factor	Estimated Demand	Panel Totals	
Lighting	1882 VA	100.00%	1882 VA		
Other	1806 VA	100.00%	1806 VA	**Total Conn. Load:**	3760 VA
Lighting - Dwelling Unit	27 VA	100.00%	27 VA	**Total Est. Demand:**	3772 VA
Lighting - Exterior	45 VA	125.00%	56 VA	**Total Conn. Current:**	5 A
				Total Est. Demand	5 A

Notes:

Branch Panel: L4

Location: Space 122
Supply From: LTG
Mounting: Surface
Enclosure: Type 1

Volts: 480/277 Wye
Phases: 3
Wires: 4

A.I.C. Rating: 65,000
Mains Type:
Mains Rating: 50 A
MCB Rating: 50 A

Notes:

CKT	Circuit Description	Trip	Poles	A		B		C		Poles	Trip	Circuit Description	CKT
1	Ltg. Rm's 131,132,133,134,135,136,137	20 A	1	1612									2
3	Ltg. Rm 130	20 A	1			1598							4
5	Ltg. Rm 130	20 A	1					270					6
7	Ltg. Rm 130	20 A	1	280									8
9													10
11													12
13													14
15													16
17													18
19													20
21													22
23													24
25													26
27													28
29													30
31													32
33													34
35													36
37													38
39													40
41													42
		Total Load:		1892 VA		1598 VA		270 VA					
		Total Amps:		7 A		6 A		1 A					

Legend:

Load Classification	Connected Load	Demand Factor	Estimated Demand	Panel Totals	
Lighting	1882 VA	100.00%	1882 VA		
Other	1806 VA	100.00%	1806 VA	**Total Conn. Load:**	3760 VA
Lighting - Dwelling Unit	27 VA	100.00%	27 VA	**Total Est. Demand:**	3772 VA
Lighting - Exterior	45 VA	125.00%	56 VA	**Total Conn. Current:**	5 A
				Total Est. Demand	5 A

Notes:

REGISTERED PROFESSIONAL ENGINEER
KURT KAISER
No. E015151
Exp. 6-30-12
ELECTRICAL
STATE OF CALIFORNIA

DONN C. GILMORE & ASSOCIATES, INC.
Consulting Mechanical and Electrical Engineers
DCGA
4051 E. La Palma Ave., Ste. A
Anaheim, CA 92807
Ph.: 714.630.4291
Fax: 714.630.4805

DATE	SYM	REVISION	BY	A'PD

NATIONAL AERONAUTICS AND SPACE ADMINISTRATION

DRYDEN FLIGHT RESEARCH CENTER
EDWARDS, CA

DRAWING TITLE

ELECTRICAL SCHEDULES

PROJECT TITLE

FACILITIES SUPPORT CENTER BUILDING
100% FINAL DESIGN SUBMITTAL

APPROVALS	DATE
Chief, Facilities Engineering & Asset Mgmt. Office DAN CROWLEY	4/14/11
Project Requestor /Customer DAN CROWLEY	4/14/11
Facilities Project Manager GEMMA FLORES	4/14/11
Chief, Office of Protective Services JOHN ZELLMER	4/14/11
Chief - Safety, Health, and Environmental Office DAN MULLEN	4/14/11
DFRC Chief Information Officer KEN NORLIN	4/14/11

DATE STRTD	11/08/10	DATE PRNTD	03/14/11
DRAWN BY		EDM-1703	
SCALE	AS NOTED	TRADE SH. No.	E0.2
FILE NAME		SHEET No. 156 of 193	

Branch Panel: L5

Location: Space 153 **Volts:** 480/277 Wye **A.I.C. Rating:** 65,000
Supply From: LTG **Phases:** 3 **Mains Type:**
Mounting: Surface **Wires:** 4 **Bus Rating:** 125 A
Enclosure: Type 1 **MCB Rating:** 50 A

Notes:

CKT	Circuit Description	Trip	Poles	A		B		C		Poles	Trip	Circuit Description	CKT
1	Ltg. Rm's 141,142,143,144,145,146	20 A	1	1116									2
3	Ltg. Rm's 140,150	20 A	1			1536							4
5	Ltg. Rm. 140	20 A	1					270					6
7	Ltg. Rm. 140	20 A	1	280									8
9													10
11													12
13													14
15													16
17													18
19													20
21													22
23													24
25													26
27													28
29													30
31													32
33													34
35													36
37													38
39													40
41													42
		Total Load:		1396 VA		1536 VA		270 VA					
		Total Amps:		5 A		6 A		1 A					

Legend:

Load Classification	Connected Load	Demand Factor	Estimated Demand	Panel Totals	
Lighting	1324 VA	100.00%	1324 VA		
Other	1806 VA	100.00%	1806 VA	**Total Conn. Load:**	3202 VA
Lighting - Dwelling Unit	27 VA	100.00%	27 VA	**Total Est. Demand:**	3214 VA
Lighting - Exterior	45 VA	125.00%	56 VA	**Total Conn. Current:**	4 A
				Total Est. Demand	4 A

Notes:

Branch Panel: L6

Location: Space 110 **Volts:** 480/277 Wye **A.I.C. Rating:** 65,000
Supply From: LTG **Phases:** 3 **Mains Type:**
Mounting: Surface **Wires:** 4 **Bus Rating:** 125 A
Enclosure: Type 1 **MCB Rating:** 50 A

Notes:

CKT	Circuit Description	Trip	Poles	A		B		C		Poles	Trip	Circuit Description	CKT
1	Ltg. Rm's 105,160,204	20 A	1	692	1100					1	20 A	Ltg. Rm's 161,175,200	2
3	Lighting Space 159	20 A	1			2294	400			1	20 A	Ltg. Rm 169	4
5	Lighting Space 161	20 A	1					1058	393	1	20 A	Ltg. Rm 172	6
7													8
9													10
11													12
13													14
15													16
17													18
19													20
21													22
23													24
25													26
27													28
29													30
31													32
33													34
35													36
37													38
39													40
41													42
		Total Load:		1792 VA		2694 VA		1451 VA					
		Total Amps:		6 A		10 A		5 A					

Legend:

Load Classification	Connected Load	Demand Factor	Estimated Demand	Panel Totals	
Lighting	3892 VA	100.00%	3892 VA		
Other	1810 VA	100.00%	1810 VA	**Total Conn. Load:**	5937 VA
Lighting - Dwelling Unit	145 VA	100.00%	145 VA	**Total Est. Demand:**	5960 VA
Lighting - Exterior	90 VA	125.00%	113 VA	**Total Conn. Current:**	7 A
				Total Est. Demand	7 A

Notes:

Branch Panel: L7

Location: Space 119 **Volts:** 480/277 Wye **A.I.C. Rating:** 65,000
Supply From: MAIN **Phases:** 3 **Mains Type:**
Mounting: Surface **Wires:** 4 **Bus Rating:** 225 A
Enclosure: Type 1 **MCB Rating:** 225 A

Notes:

CKT	Circuit Description	Trip	Poles	A		B		C		Poles	Trip	Circuit Description	CKT
1	Radial Arm Saw Disconnect Rm. 175	15 A	3	2106	8300					3	60 A	Pwr. Receptacle Rm. 170	2
3	--	--	--			2106	8300			--	--	--	4
5	--	--	--					2106	8300	--	--	--	6
7	Spindle Sander Disconnect Rm. 175	20 A	3	2700	2700					3	20 A	Pwr. Receptacle Rm. 170	8
9	--	--	--			2700	2700			--	--	--	10
11	--	--	--					2700	2700	--	--	--	12
13	Drill Press Disconnect Rm. 175	15 A	3	580	2700					3	20 A	Pwr. Receptacle Rm. 170	14
15	--	--	--			580	2700			--	--	--	16
17	--	--	--					580	2700	--	--	--	18
19	Table Saw Disconnect Rm. 175	20 A	3	2500	2700					3	20 A	Pwr. Receptacle Rm. 170	20
21	--	--	--			2500	2700			--	--	--	22
23	--	--	--					2500	2700	--	--	--	24
25	Pwr. Band Saw Disconnect Rm. 161	20 A	3	2500	1330					3	20 A	Pwr. EF-7	26
27	--	--	--			2500	1330			--	--	--	28
29	--	--	--					2500	1330	--	--	--	30
31	Pwr. Receptacle Rm. 175	60 A	3	8300	5820					3	30 A	Pwr. DC-1 Disconnect	32
33	--	--	--			8300	5820			--	--	--	34
35	--	--	--					8300	5820	--	--	--	36
37													38
39													40
41													42
		Total Load:		42236 VA		42236 VA		42236 VA					
		Total Amps:		152 A		152 A		152 A					

Legend:

Load Classification	Connected Load	Demand Factor	Estimated Demand	Panel Totals	
Other	89700 VA	100.00%	89700 VA		
Power	37008 VA	100.00%	37008 VA	**Total Conn. Load:**	126708 VA
				Total Est. Demand:	126708 VA
				Total Conn. Current:	152 A
				Total Est. Demand	152 A

Notes:

Branch Panel: M1

Location: Space 154 **Volts:** 480/277 Wye **A.I.C. Rating:** 65,000
Supply From: MAIN **Phases:** 3 **Mains Type:**
Mounting: Surface **Wires:** 4 **Bus Rating:** 400 A
Enclosure: Type 1 **MCB Rating:** 350 A

Notes:

CKT	Circuit Description	Trip	Poles	A		B		C		Poles	Trip	Circuit Description	CKT
1	Pwr. IDEC-4	20 A	3	3048	17071					3	90 A	Power Space 154	2
3	--	--	--			3048	17071			--	--	--	4
5	--	--	--					3048	17071	--	--	--	6
7	Pwr. IDEC-3	20 A	3	3048									8
9	--	--	--			3048							10
11	--	--	--					3048					12
13	Pwr. IDEC-2	20 A	3	3048									14
15	--	--	--			3048							16
17	--	--	--					3048					18
19	Pwr. IDEC-1	20 A	3	2106									20
21	--	--	--			2106							22
23	--	--	--					2106					24
25	Pwr. IDEC-5	20 A	3	2106									26
27	--	--	--			2106							28
29	--	--	--					2106					30
31	Pwr. IDEC-6	20 A	3	3048									32
33	--	--	--			3048							34
35	--	--	--					3048					36
37	Pwr. ACC-1	20 A	3	2328									38
39	--	--	--			2328							40
41	--	--	--					2328					42
		Total Load:		35803 VA		35803 VA		35803 VA					
		Total Amps:		129 A		129 A		129 A					

Legend:

Load Classification	Connected Load	Demand Factor	Estimated Demand	Panel Totals	
Power	107409 VA	100.00%	107409 VA		
				Total Conn. Load:	107409 VA
				Total Est. Demand:	107409 VA
				Total Conn. Current:	129 A
				Total Est. Demand	129 A

Notes:

REGISTERED PROFESSIONAL ENGINEER
KURT KAISER
No. E015151
Exp. 6-30-12
ELECTRICAL
STATE OF CALIFORNIA

DONN C. GILMORE & ASSOCIATES, INC.
Consulting Mechanical and Electrical Engineers
DCGA
4051 E. La Palma Ave., Ste. A
Anaheim, CA. 92807
Ph.: 714.630.4291
Fax: 714.630.4805

DATE	SYM	REVISION	BY	A'PD

NATIONAL AERONAUTICS AND SPACE ADMINISTRATION
DRYDEN FLIGHT RESEARCH CENTER
EDWARDS, CA

DRAWING TITLE
ELECTRICAL SCHEDULES

PROJECT TITLE
FACILITIES SUPPORT CENTER BUILDING
100% FINAL DESIGN SUBMITTAL

APPROVALS	DATE
Chief, Facilities Engineering & Asset Mgmt. Office DAN CROWLEY	4/14/11
Project Requestor /Customer DAN CROWLEY	4/14/11
Facilities Project Manager GEMMA FLORES	4/14/11
Chief, Office of Protective Services JOHN ZELLMER	4/14/11
Chief - Safety, Health, and Environmental Office DAN MULLEN	4/14/11
DFRC Chief Information Officer KEN NORLIN	4/14/11

DATE STRTD	11/08/10	DATE PRNTD	03/14/11
DRAWN BY		EDM-1703	
SCALE	AS NOTED	TRADE SH. No.	E0.3
FILE NAME		SHEET No. 157 of 193	

Branch Panel: P1

Location: Space 154
Supply From: DSP
Mounting: Surface
Enclosure: Type 1

Volts: 120/208 Wye
Phases: 3
Wires: 4

A.I.C. Rating: 42,000
Mains Type:
Bus Rating: 225 A
MCB Rating: 150 A

Notes:

CKT	Circuit Description	Trip	Poles	A		B		C		Poles	Trip	Circuit Description	CKT
1	Pwr. Mezzanine Rm. 200 (5)	20 A	1	900	1440					1	20 A	Pwr. Roof Recep (7)	2
3	Pwr. Mezzanine Rm. 200 (5)	20 A	1			1080	360			1	20 A	Pwr. fire Dampers	4
5	Pwr. IDEC-1 Ltg, Recep	20 A	1					1500	180	1	20 A	Pwr. EF-6, Roof Recep.	6
7	Pwr. IDEC-4 Ltg, Recep	20 A	1	1500	180					1	20 A	Pwr. Boiler #1	8
9	Pwr. IDEC-2 Ltg, Recep	20 A	1			1500	180			1	20 A	Pwr. Boiler #2	10
11	Pwr. IDEC-3 Ltg, Recep	20 A	1					1500	901	3	20 A	Pwr. CHWP-1	12
13	Pwr. IDEC-6 Ltg, Recep	20 A	1	1500	901					--	--	--	14
15	Pwr. IDEC-5 Ltg, Recep	20 A	1			1500	901			--	--	--	16
17	Pwr. ACC-1 Cont. Pwr	20 A	1					200	793	3	20 A	Pwr. HHPW-1	18
19	Pwr. EF-13	20 A	1	1176	793					--	--	--	20
21							793			--	--	--	22
23									793	3	20 A	Pwr. HHPW-2	24
25					793					--	--	--	26
27							793			--	--	--	28
29													30
31													32
33													34
35													36
37													38
39													40
41													42
		Total Load:		9183 VA		7107 VA		5867 VA					
		Total Amps:		77 A		59 A		49 A					

Legend:

Load Classification	Connected Load	Demand Factor	Estimated Demand	Panel Totals	
HVAC	1176 VA	100.00%	1176 VA		
Other	720 VA	100.00%	720 VA	**Total Conn. Load:**	22157 VA
Power	20261 VA	100.00%	20261 VA	**Total Est. Demand:**	22157 VA
				Total Conn. Current:	62 A
				Total Est. Demand	62 A

Notes:

Branch Panel: P2

Location: Space 140
Supply From: DSP
Mounting: Surface
Enclosure: Type 1

Volts: 120/208 Wye
Phases: 3
Wires: 4

A.I.C. Rating: 42,000
Mains Type:
Bus Rating: 225 A
MCB Rating: 150 A

Notes:

CKT	Circuit Description	Trip	Poles	A		B		C		Poles	Trip	Circuit Description	CKT
1	Pwr. Recep. Rm's 100,101,105,106,107	20 A	1	1080	720					1	20 A	Pwr. Rm's 112,113,114,115,171,172 (6)	2
3	Pwr. Rm's 100,101,106,107 (6)	20 A	1			1080	900			1	20 A	Pwr. Rm's 111,112,114,115,171 (6)	4
5	Pwr. Recep. Rm's 100,101,103 (3)	20 A	1					720	540	1	20 A	Pwr. rm's 111,113,171 (5)	6
7	Pwr. Rm. 102 (2 Refrigerator's)	20 A	1	1200	360					1	20 A	Pwr. Comm Rm 112 (1)	8
9	Pwr. Rm. 102 (Vending Machine)	20 A	1			1200	1200			1	20 A	Pwr. Rm. 102 (Vending Machine)	10
11	Pwr. Rm.102 (Vending Machine)	20 A	1					1200	1200	1	20 A	Pwr. Rm. 102 (Vending Machine)	12
13	Pwr. Garbage Disposal Rm. 102 (1)	20 A	1	1650	1200					1	20 A	Pwr. Rm. 102 (Microwave)	14
15	Pwr. Recep. Rm. 102 (3)	20 A	1			540	1200			1	20 A	Pwr. Rm. 102 (Microwave)	16
17	Pwr. Recep. Rm. 120 (3)	20 A	1					540	1200	2	20 A	Pwr. CU-1 (Roof)	18
19					1200					--	--	--	20
21	Per. Rm. 101 (Pendent Mounted)	20 A	1			180	180			1	20 A	Pwr. Rm. 111 (ELCP)	22
23	Pwr. Rm. 111 (LCP4)	20 A	1					180					24
25													26
27													28
29													30
31													32
33													34
35													36
37													38
39													40
41													42
		Total Load:		7410 VA		6480 VA		5580 VA					
		Total Amps:		62 A		54 A		47 A					

Legend:

Load Classification	Connected Load	Demand Factor	Estimated Demand	Panel Totals	
Other	540 VA	100.00%	540 VA		
Power	18570 VA	100.00%	18570 VA	**Total Conn. Load:**	19110 VA
				Total Est. Demand:	19110 VA
				Total Conn. Current:	53 A
				Total Est. Demand	53 A

Notes:

Branch Panel: P3

Location: Space 36
Supply From: DSP
Mounting: Surface
Enclosure: Type 1

Volts: 120/208 Wye
Phases: 3
Wires: 4

A.I.C. Rating: 42,000
Mains Type:
Bus Rating: 225 A
MCB Rating: 150 A

Notes:

CKT	Circuit Description	Trip	Poles	A		B		C		Poles	Trip	Circuit Description	CKT
1	Pwr. Rm's 124,125,126,127,128 (6)	20 A	1	1080	540					1	20 A	Pwr. Cubicle Rm. 120 (3)	2
3	Pwr. Rm's 123,124,125,126,127,128 (6)	20 A	1			1260	720			1	20 A	Pwr. Cubicle Rm. 120 (4)	4
5	Pwr. Rm's 123,124,125,126, 127,128 (6)	20 A	1					1080	900	1	20 A	Pwr. Cubicle Rm. 120 (5)	6
7	Pwr. Rm's 121,122,123 (4)	20 A	1	720	900					1	20 A	Prw. Cubicle Rm. 120 (5)	8
9	Pwr. Rm's 121,122,123 (6)	20 A	1			1080	900			1	20 A	Pwr. Cubicle Rm. 120 (5)	10
11	Pwr. Copy Rm (1)	20 A	1					600	900	1	20 A	Pwr. Cubicle Rm. 120 (5)	12
13	Pwr. Rm. 120 (1)	20 A	1	180	720					1	20 A	Pwr. Cubicle Rm. 120 (4)	14
15	Pwr. ACCU-1 A	60 A	3			3483	720			1	20 A	Pwr. Cubicle Rm. 120 (4)	16
17	--	--	--					3483	1080	1	20 A	Pwr. Cubicle Rm. 120 (6)	18
19	--	--	--	3483	1080					1	20 A	Pwr. Cubicle Rm. 120 (6)	20
21	Pwr. EF-1, EF-3, Recep	20 A	1			360	900			1	20 A	Pwr. Cubicle Rm. 120 (5)	22
23	Pwr. FC-1,FC-2,FC-3	20 A	2					306	900	1	20 A	Pwr. Cubicle Rm. 120 (5)	24
25	--	--	--	306	520					3	20 A	Pwr. EF-11	26
27	Pwr. ACCU-1 B	20 A	3			3483	520			--	--	--	28
29	--	--	--					3483	520	--	--	--	30
31	--	--	--	3483	180					1	20 A	Pwr. Rm. 121 (LCP3)	32
33	Pwr. for Soler Tube Damper (7)	20 A	1			1260	180			1	20 A	Pwr. Recep. Ceiling Rm. 128	34
35													36
37													38
39													40
41													42
		Total Load:		13192 VA		14866 VA		13252 VA					
		Total Amps:		110 A		124 A		110 A					

Legend:

Load Classification	Connected Load	Demand Factor	Estimated Demand	Panel Totals	
Other	1440 VA	100.00%	1440 VA		
Power	39510 VA	100.00%	39510 VA	**Total Conn. Load:**	41130 VA
Receptacle	180 VA	100.00%	180 VA	**Total Est. Demand:**	41130 VA
				Total Conn. Current:	114 A
				Total Est. Demand	114 A

Notes:

Branch Panel: P4

Location:
Supply From: DSP
Mounting: Surface
Enclosure: Type 1

Volts: 120/208 Wye
Phases: 3
Wires: 4

A.I.C. Rating: 42,000
Mains Type:
Bus Rating: 225 A
MCB Rating: 150 A

Notes:

CKT	Circuit Description	Trip	Poles	A		B		C		Poles	Trip	Circuit Description	CKT
1	Pwr. Rm's 132,133,134,135,136,137 (6)	20 A	1	1080	720					1	20 A	Pwr. Cubicle Rm. 130 (4)	2
3	Pwr. Rm's 133,134,135,136,137 (6)	20 A	1			1260	720			1	20 A	Pwr. Cubicle Rm. 130 (4)	4
5	Pwr. Rm's 132,133,134,135,136,137 (6)	20 A	1					1080	1080	1	20 A	Pwr. Cubicle Rm. 130 (6)	6
7	Pwr. Rm's 131,132 (3)	20 A	1	360	1080					1	20 A	Pwr. Cubicle Rm. 130 (6)	8
9	Pwr. Rm's 131,132 (3)	20 A	1			540	1080			1	20 A	Pwr. Cubicle Rm. 130 (6)	10
11	Pwr. Copy Rm. 131 (1)	20 A	1					600	900	1	20 A	Pwr. Cubicle Rm. 130 (5)	12
13	Pwr. EF-2, EF-4, Recep	20 A	1	360	1080					1	20 A	Pwr. Cubicle Rm. 130 (6)	14
15	Pwr. FC-4, FC-5,FC-6	20 A	2			286	1080			1	20 A	Pwr. Cubicle Rm. 130 (6)	16
17	--	--	--					286	1080	1	20 A	Pwr. Cubicle Rm. 130 (6)	18
19	Pwr. EF-9	20 A	3	319	1080					1	20 A	Pwr. Cubicle Rm. 130 (6)	20
21	--	--	--			319	180			1	20 A	Pwr. Recep. Rm. 130 (1)	22
23	--	--	--					319	180	1	20 A	Pwr. Rm. 130 (1)	24
25	Pwr. EF-8	20 A	1	1176									26
27	Pwr. CU-2 (Roof)	20 A	2			1200	360			1	20 A	Pwr. Telephone Board Rm. 131A	28
29	--	--	--					1200	360	1	20 A	Pwr. Telephone Board Rm. 131A	30
31	Pwr. Rm. 131 (LCP2)	20 A	1	180	1080					1	20 A	Pwr. for Soler tub Dampers (6)	32
33	Pwr. Recp. Ceiling Rm. 137	20 A	1			180							34
35													36
37													38
39													40
41													42
		Total Load:		8515 VA		7205 VA		7085 VA					
		Total Amps:		71 A		60 A		59 A					

Legend:

Load Classification	Connected Load	Demand Factor	Estimated Demand	Panel Totals	
Other	1260 VA	100.00%	1260 VA		
Power	21185 VA	100.00%	21185 VA	**Total Conn. Load:**	22625 VA
Receptacle	180 VA	100.00%	180 VA	**Total Est. Demand:**	22625 VA
				Total Conn. Current:	63 A
				Total Est. Demand	63 A

Notes:

REGISTERED PROFESSIONAL ENGINEER
KURT KAISER
No. E015151
Exp. 6-30-12
ELECTRICAL
STATE OF CALIFORNIA

DONN C. GILMORE & ASSOCIATES, INC.
Consulting Mechanical and Electrical Engineers
DCGA
4051 E. La Palma Ave., Ste. A
Anaheim, CA 92807
Ph.: 714.630.4291
Fax: 714.630.4805

DATE	SYM	REVISION	BY	A'PD

NATIONAL AERONAUTICS AND SPACE ADMINISTRATION

DRYDEN FLIGHT RESEARCH CENTER
EDWARDS, CA

DRAWING TITLE

ELECTRICAL SCHEDULES

PROJECT TITLE

FACILITIES SUPPORT CENTER BUILDING
100% FINAL DESIGN SUBMITTAL

APPROVALS	DATE
Chief, Facilities Engineering & Asset Mgmt Office **DAN CROWLEY**	4/14/11
Project Requestor /Customer **DAN CROWLEY**	4/14/11
Facilities Project Manager **GEMMA FLORES**	4/14/11
Chief, Office of Protective Services **JOHN ZELLMER**	4/14/11
Chief - Safety, Health, and Environmental Office **DAN MULLEN**	4/14/11
DFRC Chief Information Officer **KEN NORLIN**	4/19/11

DATE STRTD	11/08/10	DATE PRNTD	03/14/11
DRAWN BY		EDM-1703	
SCALE	AS NOTED	TRADE SH. No.	
FILE NAME		E0.4	SHEET No. 158 of 193

Branch Panel: P5

Location: Space 153
Supply From: DSP
Mounting: Surface
Enclosure: Type 1

Volts: 120/208 Wye
Phases: 3
Wires: 4

A.I.C. Rating: 42,000
Mains Type:
Bus Rating: 225 A
MCB Rating: 150 A

Notes:

CKT	Circuit Description	Trip	Poles	A		B		C		Poles	Trip	Circuit Description	CKT
1	Pwr. Rm's 142,143,144,145,146 (6)	20 A	1	1080	720					1	20 A	Pwr. Cubicle Rm. 140 (4)	2
3	Pwr. Rm's 141,142,143,144,145,146 (6)	20 A	1			1260	540			1	20 A	Pwr. Cubicle Rm. 140 (3)	4
5	Pwr. Rm's 141,142,143,144,145,146 (6)	20 A	1					1080	900	1	20 A	Pwr. Cubicle Rm. 140 (5)	6
7	Pwr. Copy Rm 141 (1)	20 A	1	600	900					1	20 A	Pwr. Cubicle Rm. 140 (5)	8
9	Pwr Rm's 141,150 (3)	20 A	1			720	900			1	20 A	Pwr. Cubicle Rm. 140 (5)	10
11	Pwr. Rm's 141,150 (4)	20 A	1					720	1080	1	20 A	Pwr. Cubicle Rm. 140 (6)	12
13	Pwr. EF-5, Recep	20 A	1	180	1080					1	20 A	Pwr. Cubicle Rm. 140 (6)	14
15	Pwr. FC-7,FC-8,FC-9	20 A	2			394	1080			1	20 A	Pwr. Cubicle Rm. 140 (6)	16
17	--	--	--					394	1080	1	20 A	Pwr. Cubicle Rm. 140 (6)	18
19	Pwr. EF-10	20 A	3	319	900					1	20 A	Pwr. Cubicle Rm. 140 (5)	20
21	--	--	--			319	180			1	20 A	Pwr. Recep. Rm. 140 (1)	22
23	--	--	--					319	180	1	20 A	Pwr. Irrigation Control	24
25	LCP1	20 A	1	180	180					1	20 A	Pwr. Recep. Ceiling Rm. 146	26
27	Pwr. ERU-1	20 A	2			139							28
29	--	--	--					139					30
31													32
33													34
35													36
37													38
39													40
41													42
		Total Load:		6139 VA		5532 VA		5892 VA					
		Total Amps:		51 A		46 A		49 A					

Legend:

Load Classification	Connected Load	Demand Factor	Estimated Demand	Panel Totals	
Other	180 VA	100.00%	180 VA		
Power	17023 VA	100.00%	17023 VA	**Total Conn. Load:**	17383 VA
Receptacle	180 VA	100.00%	180 VA	**Total Est. Demand:**	17383 VA
				Total Conn. Current:	48 A
				Total Est. Demand	48 A

Notes:

Branch Panel: P6

Location: Space 110
Supply From: DSP
Mounting: Surface
Enclosure: Type 1

Volts: 120/208 Wye
Phases: 3
Wires: 4

A.I.C. Rating: 42,000
Mains Type:
Bus Rating: 225 A
MCB Rating: 150 A

Notes:

CKT	Circuit Description	Trip	Poles	A		B		C		Poles	Trip	Circuit Description	CKT
1	Pwr. Rm's 161,164,165,162,169 (6)	20 A	1	720	1080					1	20 A	Pwr. Rm's 108,109,110,167,168 (6)	2
3	Pwr. Rm's 164,165,162,167,169 (6)	20 A	1			900	1080			1	20 A	Pwr. Rm's 105,108,109,110,168 (6)	4
5	Pwr. Rm's 164,165,162,167,169 (6)	20 A	1					900	900	1	20 A	Pwr. Rm's 110,167,168 (6)	6
7	Pwr. EF-12	20 A	3	458	1650					1	20 A	Pwr. Garbage Disposal Rm 110 (1)	8
9	--	--	--			458	540			1	20 A	Pwr. Rm. 160 (3)	10
11	--	--	--					458	1080	1	20 A	Pwr. Cubicle Rm. 160 (6)	12
13	Pwr. Rm. 110 (3)	20 A	1	540	1260					1	20 A	Pwr. Cubicle Rm. 160 (7)	14
15							1260			1	20 A	Pwr. Cubicle Rm. 160 (7)	16
17									1080	1	20 A	Pwr. Cubicle Rm. 160 (6)	18
19					540					1	20 A	Pwr. Cubicle Rm. 160 (3)	20
21							540			1	20 A	Pwr. Cubicle Rm. 160 (3)	22
23													24
25													26
27													28
29													30
31													32
33													34
35													36
37													38
39													40
41													42
		Total Load:		6248 VA		4778 VA		4418 VA					
		Total Amps:		52 A		40 A		37 A					

Legend:

Load Classification	Connected Load	Demand Factor	Estimated Demand	Panel Totals	
Power	15264 VA	100.00%	15264 VA		
Receptacle	180 VA	100.00%	180 VA	**Total Conn. Load:**	15444 VA
				Total Est. Demand:	15444 VA
				Total Conn. Current:	43 A
				Total Est. Demand	43 A

Notes:

Branch Panel: P7

Location: Space 119
Supply From: DSP
Mounting: Surface
Enclosure: Type 1

Volts: 120/208 Wye
Phases: 3
Wires: 4

A.I.C. Rating: 42,000
Mains Type:
Bus Rating: 225 A
MCB Rating: 225 A

Notes:

CKT	Circuit Description	Trip	Poles	A		B		C		Poles	Trip	Circuit Description	CKT
1	Pwr. Receptacles Rm. 170 (3)	20 A	1	540	720					1	20 A	Pwr. Receptacles Rm. 170 (4)	2
3	Pwr. Receptacles Rm. 170 (2)	20 A	1			360	1560			2	30 A	Pwr. Receptacle Rm. 170	4
5	Pwr. Receptacle Rm. 170	30 A	3					1800	1560	--	--	--	6
7	--	--	--	1800	1800					3	30 A	Pwr. Receptacle Rm. 170	8
9	--	--	--			1800	1800			--	--	--	10
11	Pwr. Receptacles Rm. 170 (3)	20 A	1					540	1800	--	--	--	12
13	Pwr. Receptacles Rm. 170 (3)	20 A	1	540									14
15	Pwr. Receptacle Rm. 170	30 A	2			1560							16
17	--	--	--					1560					18
19	Pwr. Receptacle Rm. 170	30 A	3	1800									20
21	--	--	--			1800							22
23	--	--	--					1800					24
25	Pwr. Receptacle Rm. 170	20 A	1	360									26
27	Pwr. Receptacle Rm. 170	30 A	2			1560							28
29	--	--	--					1560					30
31	Pwr. Receptacle Rm. 170	30 A	3	1800									32
33	--	--	--			1800							34
35	--	--	--					1800					36
37													38
39													40
41													42
		Total Load:		9360 VA		12240 VA		12420 VA					
		Total Amps:		78 A		102 A		104 A					

Legend:

Load Classification	Connected Load	Demand Factor	Estimated Demand	Panel Totals	
Other	30960 VA	100.00%	30960 VA		
Power	3060 VA	100.00%	3060 VA	**Total Conn. Load:**	34020 VA
				Total Est. Demand:	34020 VA
				Total Conn. Current:	94 A
				Total Est. Demand	94 A

Notes:
1. PROVIDE ISOLATED GROUND BUS.

Branch Panel: P8

Location: Space 109
Supply From: DSP
Mounting: Surface
Enclosure: Type 1

Volts: 120/208 Wye
Phases: 3
Wires: 4

A.I.C. Rating: 42,000
Mains Type:
Bus Rating: 225 A
MCB Rating: 150 A

Notes:

CKT	Circuit Description	Trip	Poles	A		B		C		Poles	Trip	Circuit Description	CKT
1	Pwr. Receptacles Rm. 175 (5)	20 A	1	900	1000					2	20 A	Pwr. Lift Disconnect Rm. 174	2
3	Pwr. Receptacles Rm. 175 (3)	20 A	1			540	1000			--	--	--	4
5	Pwr. Receptacles Rm. 175 (4)	20 A	1					720	3120	2	50 A	Welder Receptacle Rm. 161	6
7	Grinder Disconnect Rm. 161	20 A	3	350	3120					--	--	--	8
9	--	--	--			350	3120			2	50 A	Welder Receptacle Rm. 161	10
11	--	--	--					350	3120	--	--	--	12
13	Pwr. Receptacle Rm. 161 (5)	20 A	1	900	286					2	20 A	Pwr. FC-10,FC-11,FC-15	14
15	Pwr. Receptacle Rm. 161 (5)	20 A	1			1080	286			--	--	--	16
17	Pwr. Receptacle Rm. 169 (5)	20 A	1					900	286	2	20 A	Pwr. FC-12,FC-13,FC-14	18
19	Pwr. Receptacle Rm. 171 (4)	20 A	1	720	286					--	--	--	20
21	Pwr. ERU-2	20 A	2			327	1080			1	20 A	Pwr. Fire Dampers Rm. 175 (7)	22
23	--	--	--					327					24
25	Pwr. Charging Cart Station	20 A	1	200									26
27	Pwr. Charging Cart Station	20 A	1			200							28
29	Pwr. Charging Cart Station	20 A	1					200					30
31	Pwr. Charging Cart Station	20 A	1	200									32
33	Pwr. Charging Cart Station	20 A	1			200							34
35	Pwr. Charging Cart Station	20 A	1					200					36
37	Pwr. Charging Cart Station	20 A	1	200									38
39	Pwr. Charging Cart Station	20 A	1			200							40
41													42
		Total Load:		8162 VA		8383 VA		9223 VA					
		Total Amps:		68 A		70 A		77 A					

Legend:

Load Classification	Connected Load	Demand Factor	Estimated Demand	Panel Totals	
HVAC	572 VA	100.00%	572 VA		
Other	16210 VA	100.00%	16210 VA	**Total Conn. Load:**	25768 VA
Power	8986 VA	100.00%	8986 VA	**Total Est. Demand:**	25768 VA
				Total Conn. Current:	72 A
				Total Est. Demand	72 A

Notes:

REGISTERED PROFESSIONAL ENGINEER
KURT KAISER
No. E015151
Exp. 6-30-12
ELECTRICAL
STATE OF CALIFORNIA

DONN C. GILMORE & ASSOCIATES, INC.
Consulting Mechanical and Electrical Engineers
DCGA
4051 E. La Palma Ave., Ste. A
Anaheim, CA 92807
Ph.: 714.630.4291
Fax: 714.630.4805

DATE	SYM	REVISION	BY	A'PD

NATIONAL AERONAUTICS AND SPACE ADMINISTRATION
DRYDEN FLIGHT RESEARCH CENTER
EDWARDS, CA

DRAWING TITLE
ELECTRICAL SCHEDULES

PROJECT TITLE
FACILITIES SUPPORT CENTER BUILDING
100% FINAL DESIGN SUBMITTAL

APPROVALS	DATE
Chief, Facilities Engineering & Asset Mgmt Office DAN CROWLEY	4/14/11
Project Requestor /Customer DAN CROWLEY	4/14/11
Facilities Project Manager GEMMA FLORES	4/14/11
Chief, Office of Protective Services JOHN ZELLMER	4/14/11
Chief - Safety, Health, and Environmental Office DAN MULLEN	4/14/11
DFRC Chief Information Officer KEN NORLIN	4/19/11

DATE STRTD	11/08/10	DATE PRNTD	03/14/11
DRAWN BY		TRADE SH. No.	EDM-1703
SCALE	AS NOTED		
FILE NAME		E0.5	SHEET No. 159 of 193

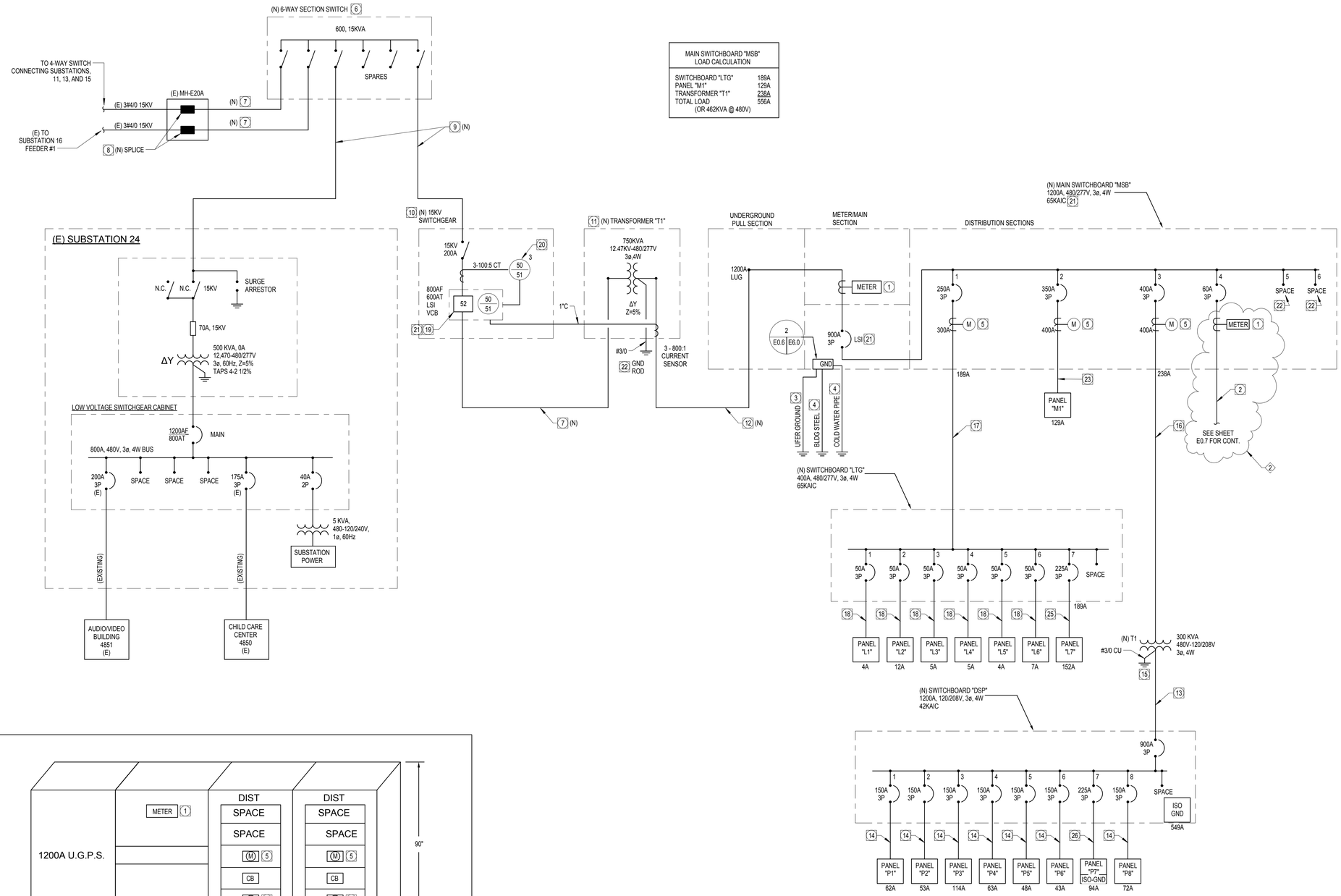

SINGLE LINE DIAGRAM NOTES:

1. PROVIDE SQUARE D POWER LOGIC SERIES 4000 CIRCUIT MONITOR MODEL CM4250, WITH MODEL CMDVF VACUUM FLUORESCENT DISPLAY AND MODEL ECC21 ETHERNET COMMUNICATIONS CARD. NO EXCEPTIONS OR EQUIVALENT HARDWARE WILL BE ALLOWED.
2. PROVIDE 1"C-3 #4, 1#8 GND.
3. PROVIDE 30 FEET OF #3/0 COPPER WIRE, ENCASED IN BUILDING CONCRETE FOUNDATION.
4. PROVIDE #3/0 COPPER WIRE TO BUILDING STEEL AND COLD WATER PIPE AT BUILDING SERVICE ENTRY.
5. PROVIDE NETWORKED 3-PHASE DIGITAL MULTI-FUNCTION POWER MONITOR WITH MODBUS RTU. POWER MEASUREMENTS SHALL INCLUDE VOLTS, AMPS, KW, KVA, KWH, FREQUENCY, AND POWER FACTOR. INTEGRATED MEMORY SHALL STORE MAXIMUM KW DEMAND AND TOTALIZED KWH READINGS. PROVIDE VERIS MODEL H8036 OR APPROVED EQUAL. AS H8036-300-2 FOR 300A H8036-0400-3 FOR 400A CTS.
6. PROVIDE NEW 600A, 15KV, 6-WAY, SF6 SECTIONALIZING SWITCH, PAD MOUNTED ADJACENT TO EXISTING SUBSTATION 24.
7. PROVIDE 4"C - 3# 4/0, 15KV, 133% INSULATION, WITH #1/0 BARE COPPER GROUND WIRE.
8. PROVIDE WATER-PROOF INLINE SPLICE ON EXISTING 15KV CONDUCTORS IN MANHOLE.
9. PROVIDE 5"C - 3# 4/0, 15KV, 133% INSULATION, WITH #1/0 BARE COPPER GROUND WIRE.
10. PROVIDE NEW PAD MOUNTED INTERRUPT SWITCH RATED 15KV, 200A, AND FIXED MOUNTED VACUUME BREAKER RATED 15KV 600A IN SINGLE NON-WALKING, WEATHER-PROOF ENCLOSURE. PROVIDE INTEGRAL 120VAC CONTROL POWER SOURCE TRANSFORMER AND CAPACITOR STORED ENERGY TRIP DEVICE FOR VACUUM BREAKER. PROVIDE EATON MODEL METAL ENCLOSED SWITCHGEAR OR APPROVED
11. PROVIDE NEW PAD-MOUNTED BUILDING SERVICE TRANSMFORMER. SEE SITE PLAN (SHEET E1.0) FOR LOCATION.
12. PROVIDE (3) 3"C-4 #500 MCM, 1 #2/0 GND. (IN EACH).
13. PROVIDE (3) 2-1/2"C - 4# 350 MCM, 1# 2/0 GND, 1#6 ISO GND (EACH).
14. PROVIDE 2"C - 4# 2/0, 1#6 GND.
15. PROVIDE BOLTED CONNECTION TO MAIN SWITCHBOARD "MSB" GROUND BUS.
16. PROVIDE (2) 2"C - 3# 3/0, 1#3 GND (EACH).
17. PROVIDE 2-1/2"C - 4# 250 MCM, 1#4 GND.
18. PROVIDE 1-1/4"C - 4#4, 1#8 GND.
19. PROVIDE FIXED MOUNTED VACUUM CIRCUIT BREAKER WITH INTEGRAL 50/50 OVERCURRENT PROTECTIVE DEVICE AND ARC DEDUCTION MAINTENANCE MODE SWITCH. PROVIDE EATON MODEL 150 VCP-TR40 15KV VACUUM BREAKER WITH MODEL DT520MCV 50/50 PROTECTIVE RELAY OR APPROVED EQUAL.
20. PROVIDE EATON MODEL DT-3000 PROTECTIVE RELAY OR APPROVED EQUAL.
21. PROVIDE SHORT CIRCUIT STUDY, COORDINATION STUDY, ARC FLASH ANALYSIS AND ARC FLASH LABLES FOR 15KV AND 480V CIRCUIT BREAKERS.
22. PROVIDE SPACE FOR TWO (2) 225A FRAME, 3 POLE CIRCUIT BREAKERS.
23. PROVIDE (2) 2"C-3 #2/0, 1 #3 GND.
24. PROVIDE 4" CONCRETE HOUSEKEEPING PAD WITH 4" OVERLAP, ALL AROUND.
25. PROVIDE 2 1/2"C-4 #4/0, 1 #4 GND.
26. PROVIDE 2 1/2"C-4 #4/0, 1 #4 GND., 1 #4 ISO-GND.

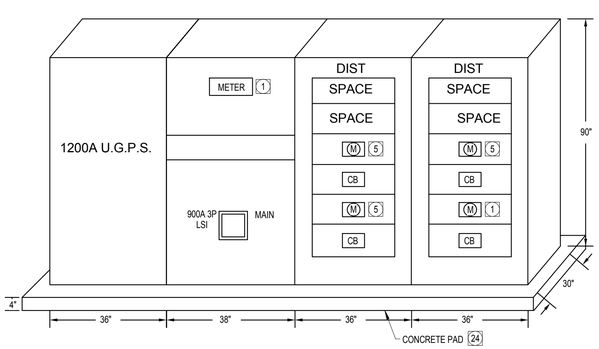

MAIN SWITCHBOARD "MSB" ELEVATION | 1 | N.T.S.

REGISTERED PROFESSIONAL ENGINEER KURT KAISER No. E015151 Exp. 6-30-12 ELECTRICAL STATE OF CALIFORNIA

DONN C. GILMORE & ASSOCIATES, INC.
Consulting Mechanical and Electrical Engineers
DCGA
4051 E. La Palma Ave., Ste. A
Anaheim, CA 92807
Ph.: 714.630.4291
Fax: 714.630.4805

DATE	SYM	REVISION	BY	A'PD

NATIONAL AERONAUTICS AND SPACE ADMINISTRATION
DRYDEN FLIGHT RESEARCH CENTER
EDWARDS, CA

DRAWING TITLE
ELECTRICAL SINGLE LINE DIAGRAM

PROJECT TITLE
FACILITIES SUPPORT CENTER BUILDING
100% FINAL DESIGN SUBMITTAL

APPROVALS	DATE
Chief, Facilities Engineering & Asset Mgmt. Office DAN CROWLEY	4/14/11
Project Requestor /Customer DAN CROWLEY	4/14/11
Facilities Project Manager GEMMA FLORES	4/14/11
Chief, Office of Protective Services JOHN ZELLMER	4/14/11
Chief - Safety, Health, and Environmental Office DAN MULLEN	4/14/11
DFRC Chief Information Officer KEN NORLIN	4/19/11

DATE STRTD	11/08/10	DATE PRNTD	03/14/11
DRAWN BY			EDM-1703
SCALE	AS NOTED	TRADE SH. No.	E0.6
FILE NAME		SHEET No. 160 of 193	