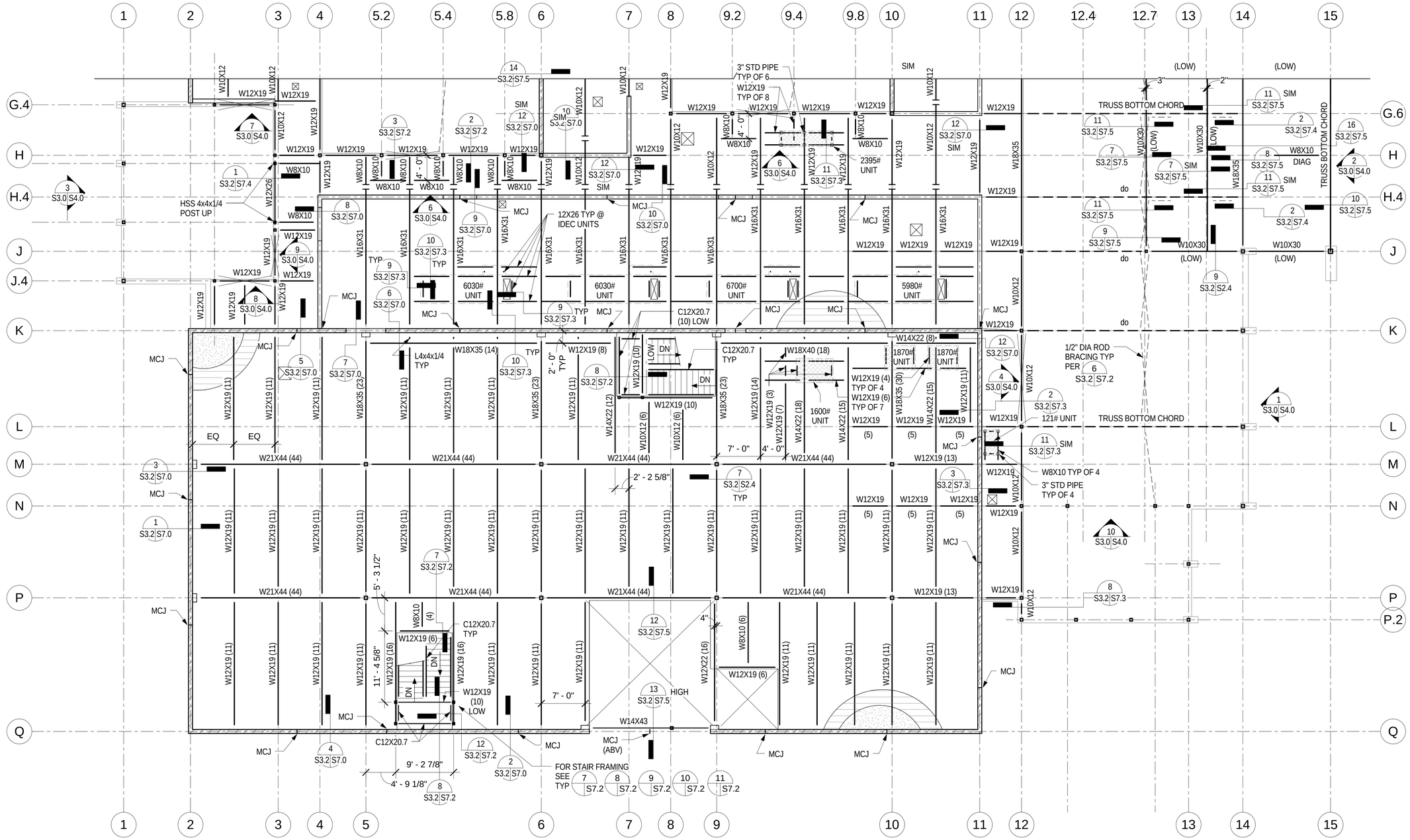

NOTE:

SEE S3.2 FOR LEGEND & FRAMING NOTES

SDSE Structural Engineers

DEVELOPMENT ONE, INC.
1611 East Fourth Street, Suite 250
Santa Ana, California 92701
J. Bruce Camino, Architect, AIA, NCARB
(714) 689-0298
(714) 648-0197 FAX

DATE	SYM	REVISION	BY	A'PD

NATIONAL AERONAUTICS AND SPACE ADMINISTRATION
DRYDEN FLIGHT RESEARCH CENTER
EDWARDS, CA

DRAWING TITLE
SOUTH - LOW ROOF FRAMING PLAN AND MEZZANINE FRAMING PLAN

PROJECT TITLE
FACILITIES SUPPORT CENTER BUILDING
100% FINAL DESIGN SUBMITTAL

APPROVALS	DATE
Chief, Facilities Engineering Assoc. Mgmt. Office DAN CROWLEY	4/14/11
Project Requestor /Customer DAN CROWLEY	4/14/11
Facilities Project Manager GEMMA FLORES	4/14/11
Chief, Office of Protective Services JOHN ZELLMER	4/14/11
Chief - Safety, Health, and Environmental Office DAN MULLEN	4/14/11
DFRC Chief Information Officer KEN NORLIN	4/14/11

DATE STRTD	11/04/10	DATE PRNTD	03/14/11
DRAWN BY		EDM-1703	
SCALE	AS NOTED	TRADE SH. No. S3.3	
FILE NAME		SHEET No. 101 of 193	

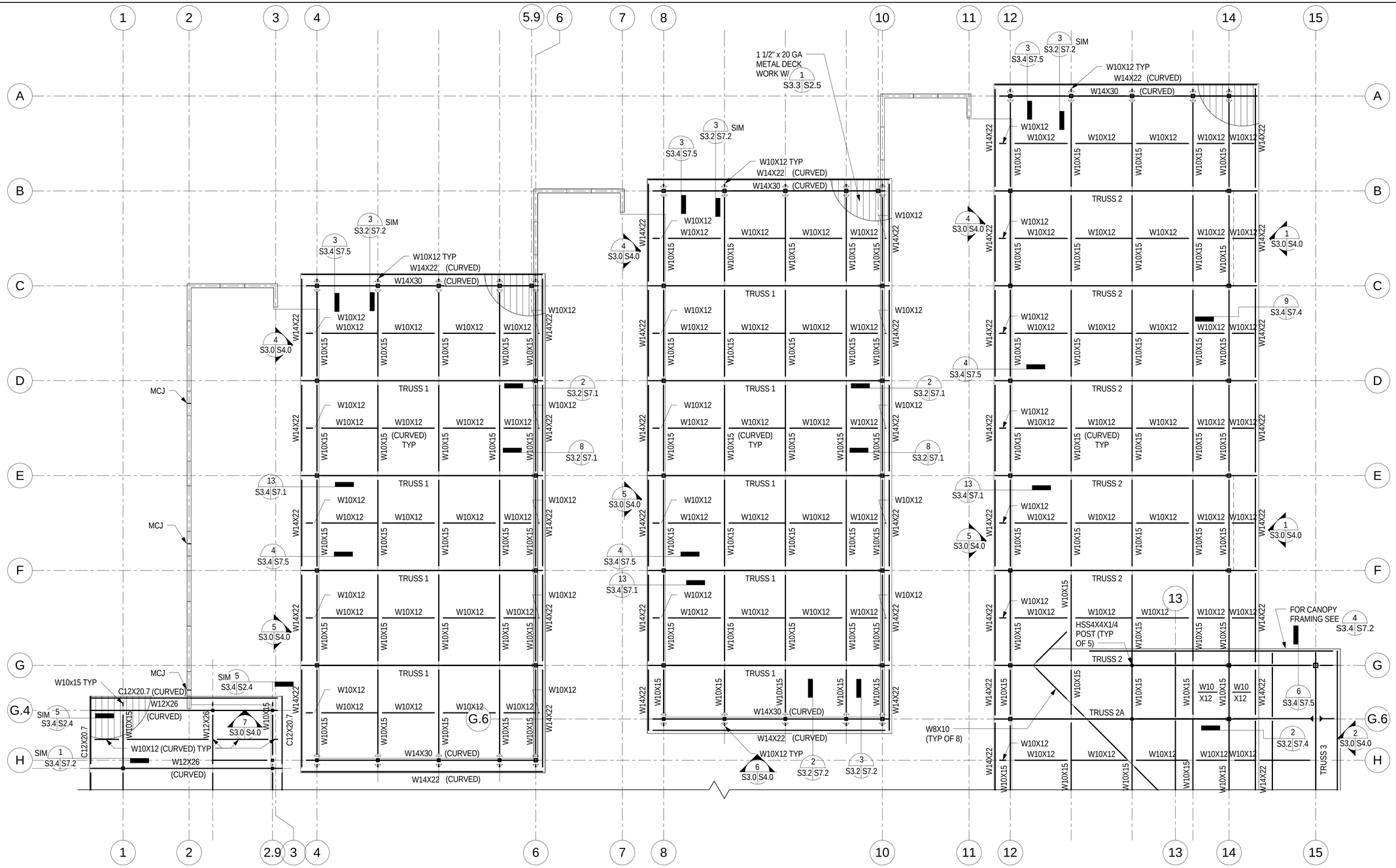

NOTE:

SEE S3.2 FOR LEGEND & FRAMING NOTES

SDSE Structural Engineers

DEVELOPMENT ONE, INC.
1611 East Fourth Street, Suite 250
Santa Ana, California 92701
J. Bruce Camino, Architect, AIA, NCARB
(714) 689-0298
(714) 648-0197 FAX

DATE	SYM	REVISION	BY	A'PD

NATIONAL AERONAUTICS AND SPACE ADMINISTRATION

DRYDEN FLIGHT RESEARCH CENTER
EDWARDS, CA

DRAWING TITLE

NORTH - HIGH ROOF FRAMING PLAN

PROJECT TITLE

FACILITIES SUPPORT CENTER BUILDING
100% FINAL DESIGN SUBMITTAL

APPROVALS		DATE
Chief, Facilities Engineering Assist. Mgmt. Office DAN CROWLEY	Daniel J. Cooley	4/14/11
Project Requestor /Customer DAN CROWLEY	Daniel J. Cooley	4/14/11
Facilities Project Manager GEMMA FLORES	Gemma Flores	4/14/11
Chief, Office of Protective Services JOHN ZELLMER	[signature]	4/14/11
Chief - Safety, Health, and Environmental Office DAN MULLEN	Daniel F. Mullen	4/14/11
DFRC Chief Information Officer KEN NORLIN	[signature]	4/14/11

DATE STRTD	11/04/10	DATE PRNTD	03/14/11
DRAWN BY			EDM-1703
SCALE	AS NOTED	TRADE SH. No. S3.4	
FILE NAME			SHEET No. 102 of 193

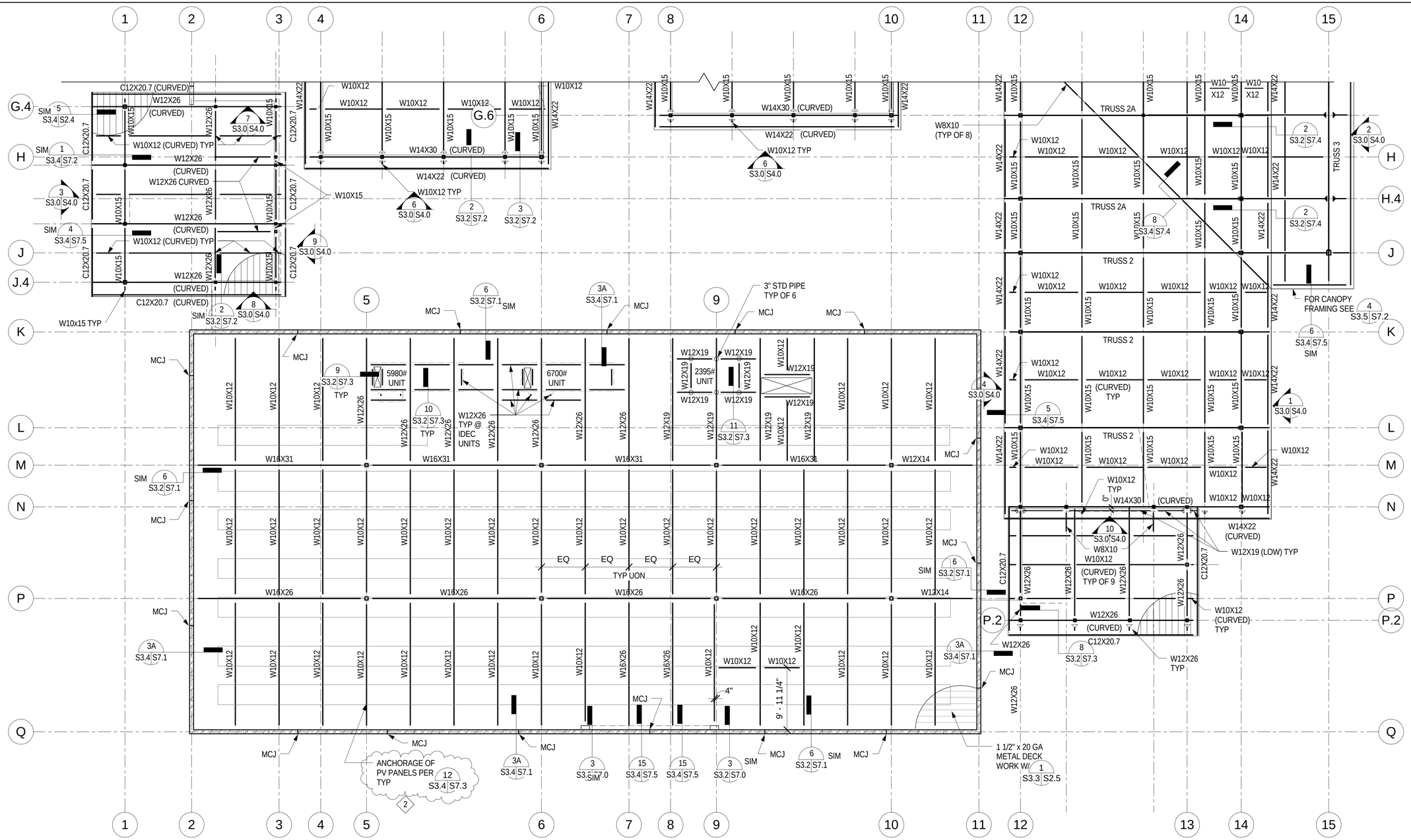

NOTE:

SEE S3.2 FOR LEGEND & FRAMING NOTES

SDSE Structural Engineers

DEVELOPMENT ONE, INC.
1611 East Fourth Street, Suite 250
Santa Ana, California 92701
J. Bruce Camino, Architect, AIA, NCARB
(714) 689-0298
(714) 648-0197 FAX

DATE	SYM	REVISION	BY	A'PD

NATIONAL AERONAUTICS AND SPACE ADMINISTRATION

DRYDEN FLIGHT RESEARCH CENTER
EDWARDS, CA

DRAWING TITLE

SOUTH - HIGH ROOF FRAMING PLAN

PROJECT TITLE

FACILITIES SUPPORT CENTER BUILDING
100% FINAL DESIGN SUBMITTAL

APPROVALS	DATE
Chief, Facilities Engineering Asset Management Office DAN CROWLEY	4/14/11
Project Requestor /Customer DAN CROWLEY	4/14/11
Facilities Project Manager GEMMA FLORES	4/14/11
Chief, Office of Protective Services JOHN ZELLMER	4/14/11
Chief - Safety, Health, and Environmental Office DAN MULLEN	4/14/11
DFRC Chief Information Officer KEN NORLIN	4/14/11

DATE STRTD	11/04/10	DATE PRNTD	03/14/11
DRAWN BY			EDM-1703
SCALE	AS NOTED	TRADE SH. No. S3.5	
FILE NAME			SHEET No. 103 of 193

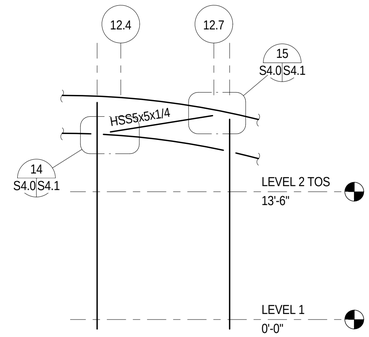

FRAME 10 | SCALE: 1/8" = 1'-0" | 10 S3.0 S4.0

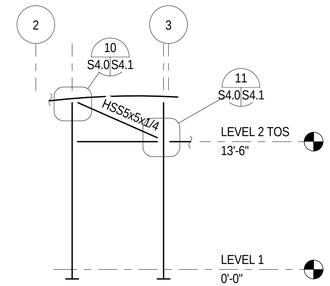

FRAME 7 | SCALE: 1/8" = 1'-0" | 7 S3.0 S4.0

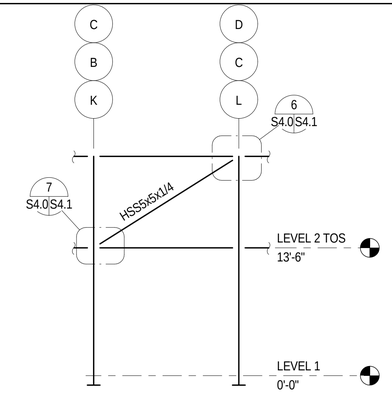

FRAME 4 | SCALE: 1/8" = 1'-0" | 4 S3.0 S4.0

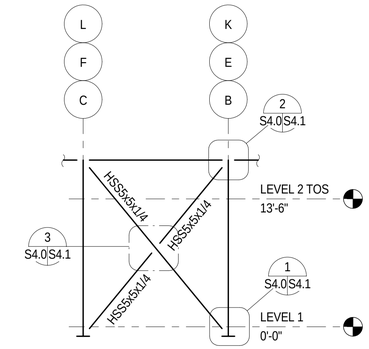

FRAME 1 | SCALE: 1/8" = 1'-0" | 1 S3.0 S4.0

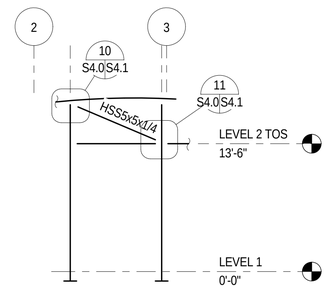

FRAME 8 | SCALE: 1/8" = 1'-0" | 8 S3.0 S4.0

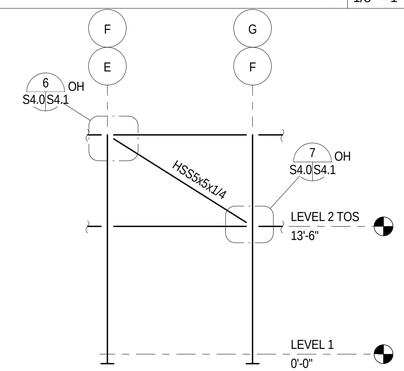

FRAME 5 | SCALE: 1/8" = 1'-0" | 5 S3.0 S4.0

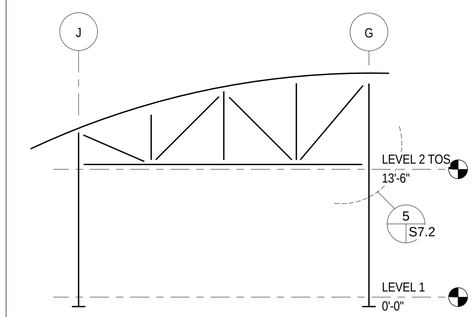

FRAME 2 | SCALE: 1/8" = 1'-0" | 2 S3.0 S4.0

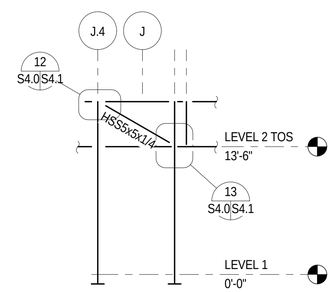

FRAME 9 | SCALE: 1/8" = 1'-0" | 9 S3.0 S4.0

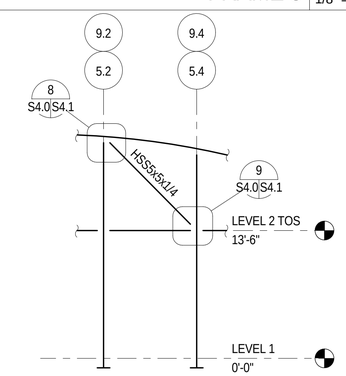

FRAME 6 | SCALE: 1/8" = 1'-0" | 6 S3.0 S4.0

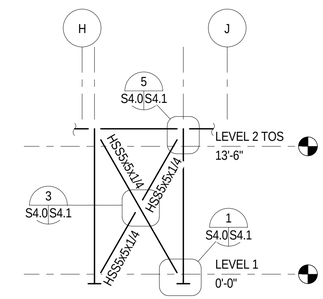

FRAME 3 | SCALE: 1/8" = 1'-0" | 3 S3.0 S4.0

REGISTERED PROFESSIONAL ENGINEER CHRISTOPHER M. JOHNSON C 2794 Exp. 3-31-12 STRUCTURAL STATE OF CALIFORNIA

SDSE Structural Engineers

DEVELOPMENT ONE, INC.
1611 East Fourth Street, Suite 250
Santa Ana, California 92701
J. Bruce Camino, Architect, AIA, NCARB
(714) 689-0298
(714) 648-0197 FAX

DATE	SYM	REVISION	BY	A'PD

NATIONAL AERONAUTICS AND SPACE ADMINISTRATION

DRYDEN FLIGHT RESEARCH CENTER
EDWARDS, CA

DRAWING TITLE

LATERAL LOAD RESISTING BRACED FRAME AND ROOF DRAG ELEVATIONS

PROJECT TITLE

FACILITIES SUPPORT CENTER BUILDING
100% FINAL DESIGN SUBMITTAL

APPROVALS	DATE
Chief, Facilities Engineering & Asset Mgt Office DAN CROWLEY	4/14/11
Project Requestor /Customer DAN CROWLEY	4/14/11
Facilities Project Manager GEMMA FLORES	4/14/11
Chief, Office of Protective Services JOHN ZELLMER	04/14/11
Chief - Safety, Health, and Environmental Office DAN MULLEN	4/14/11
DFRC Chief Information Officer KEN NORLIN	4/14/11

DATE STRTD	11/04/10	DATE PRNTD	03/14/11
DRAWN BY		EDM-1703	
SCALE	AS NOTED	TRADE SH. No.	S4.0
FILE NAME		SHEET No. 104 of 193	

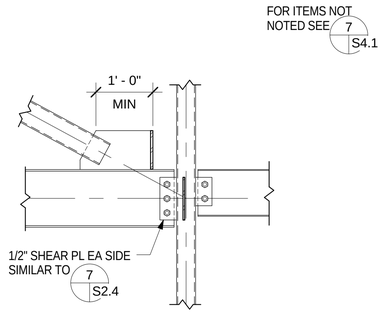

FRAME DETAIL 13 SCALE: 3/4" = 1'-0" 13 S4.0 S4.1

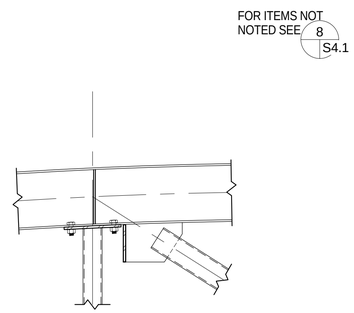

FRAME DETAIL 10 SCALE: 3/4" = 1'-0" 10 S4.0 S4.1

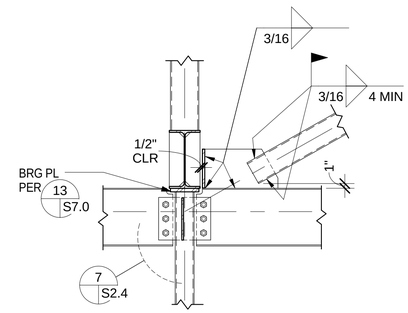

FRAME DETAIL 7 SCALE: 3/4" = 1'-0" 7 S4.0 S4.1

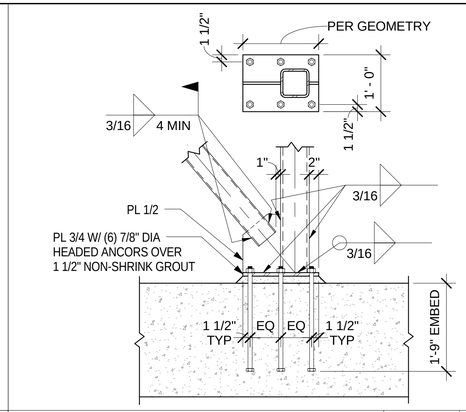

FRAME DETAIL 1 SCALE: 3/4" = 1'-0" 1 S4.0 S4.1

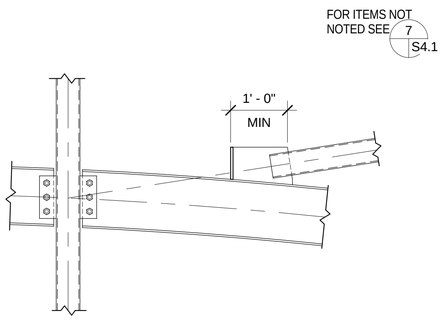

FRAME DETAIL 14 SCALE: 3/4" = 1'-0" 14 S4.0 S4.1

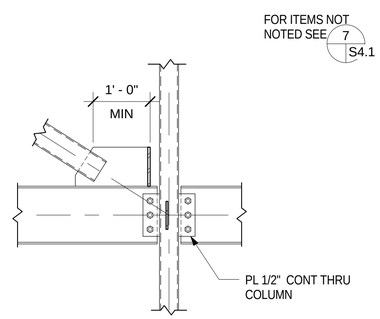

FRAME DETAIL 11 SCALE: 3/4" = 1'-0" 11 S4.0 S4.1

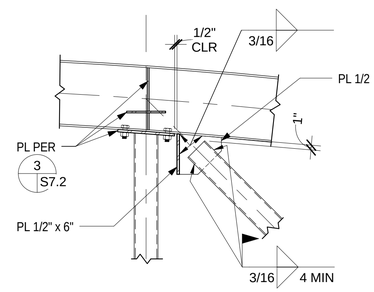

FRAME DETAIL 8 SCALE: 3/4" = 1'-0" 8 S4.0 S4.1

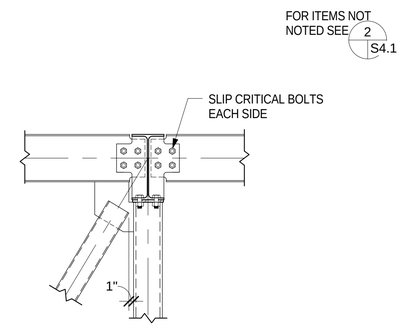

FRAME DETAIL 5 SCALE: 3/4" = 1'-0" 5 S4.0 S4.1

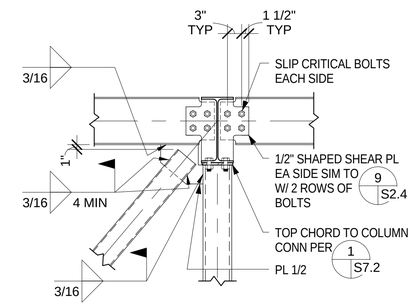

FRAME DETAIL 2 SCALE: 3/4" = 1'-0" 2 S4.0 S4.1

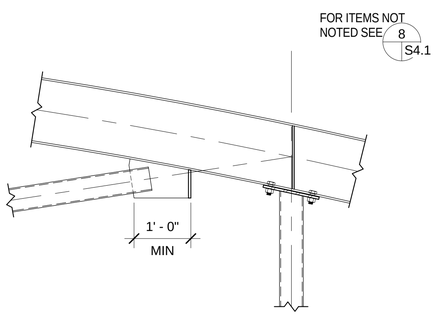

FRAME DETAIL 15 SCALE: 3/4" = 1'-0" 15 S4.0 S4.1

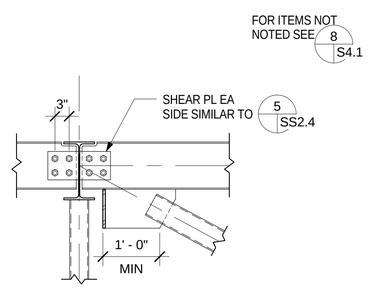

FRAME DETAIL 12 SCALE: 3/4" = 1'-0" 12 S4.0 S4.1

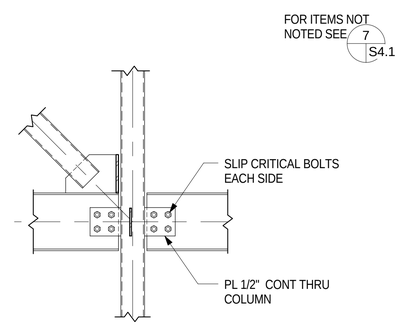

FRAME DETAIL 9 SCALE: 3/4" = 1'-0" 9 S4.0 S4.1

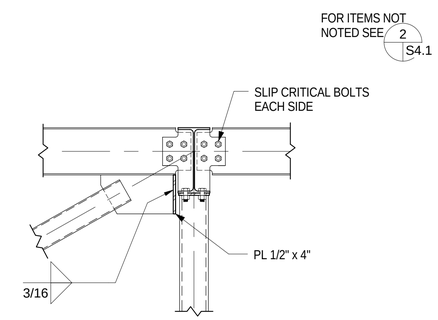

FRAME DETAIL 6 SCALE: 3/4" = 1'-0" 6 S4.0 S4.1

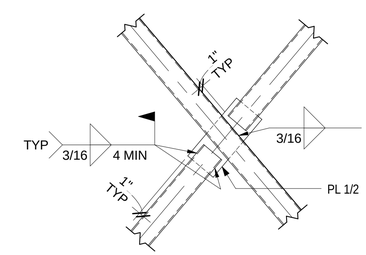

FRAME DETAIL 3 SCALE: 3/4" = 1'-0" 3 S4.0 S4.1

SDSE
Structural Engineers

DEVELOPMENT ONE, INC.
1611 East Fourth Street, Suite 250
Santa Ana, California 92701
J. Bruce Camino, Architect, AIA, NCARB
(714) 689-0298
(714) 648-0197 FAX

DATE	SYM	REVISION	BY	A'PD

NATIONAL AERONAUTICS AND SPACE ADMINISTRATION

DRYDEN FLIGHT RESEARCH CENTER
EDWARDS, CA

DRAWING TITLE

FRAME DETAILS

PROJECT TITLE

FACILITIES SUPPORT CENTER BUILDING
100% FINAL DESIGN SUBMITTAL

APPROVALS	DATE
Chief, Facilities Engineering Division: DAN CROWLEY	4/14/11
Project Requestor /Customer: DAN CROWLEY	4/14/11
Facilities Project Manager: GEMMA FLORES	4/14/11
Chief, Office of Protective Services: JOHN ZELLMER	4/14/11
Chief - Safety, Health, and Environmental Office: DAN MULLEN	4/14/11
DFRC Chief Information Officer: KEN NORLIN	4/14/11

DATE STRTD	11/04/10	DATE PRNTD	03/14/11
DRAWN BY		EDM-1703	
SCALE	AS NOTED	TRADE SH. No. S4.1	
FILE NAME		SHEET No. 105 of 193	

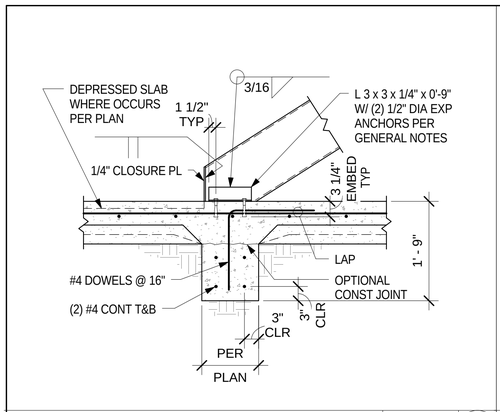

STAIR FOUNDATION DETAIL — SCALE: 3/4" = 1'-0" — 12 / S3.0 S6.0

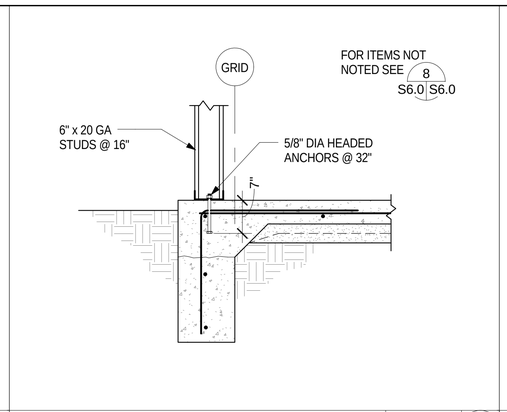

TURNDOWN AT STUD WALL — SCALE: 3/4" = 1'-0" — 9 / S3.0 S6.0

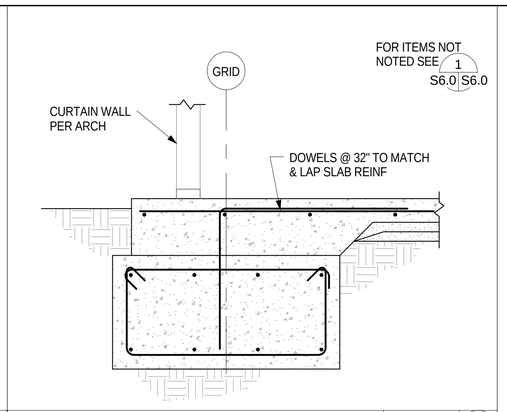

GRADE BEAM AT CURTAIN WALL — SCALE: 3/4" = 1'-0" — 6 / S3.0 S6.0

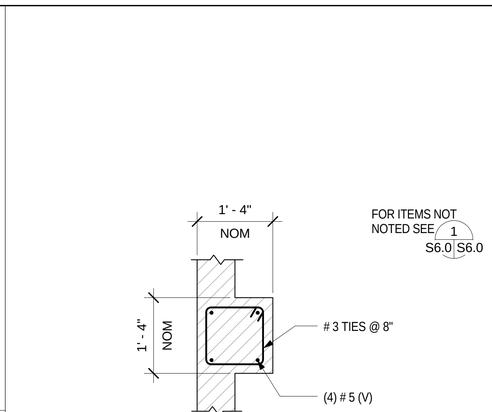

SECTION A-A

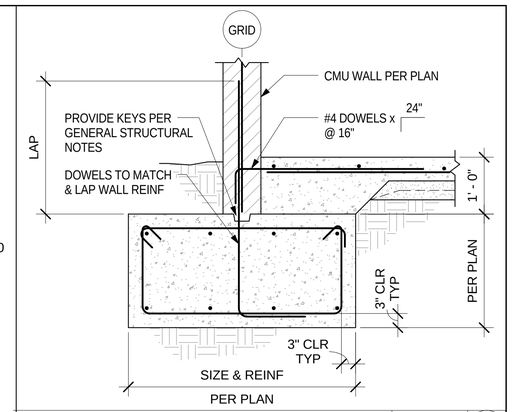

GRADE BEAM AT EXT WALL — SCALE: 1 / 3/4" = 1'-0" — S3.0 S6.0

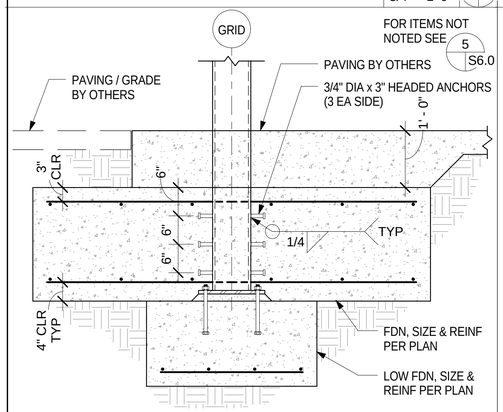

FOOTING AT CANOPY — SCALE: 3/4" = 1'-0" — 13 / S3.0 S6.0

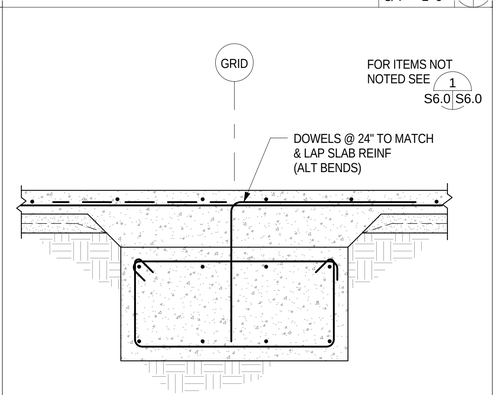

GRADE BEAM AT INT — SCALE: 3/4" = 1'-0" — 10 / S3.0 S6.0

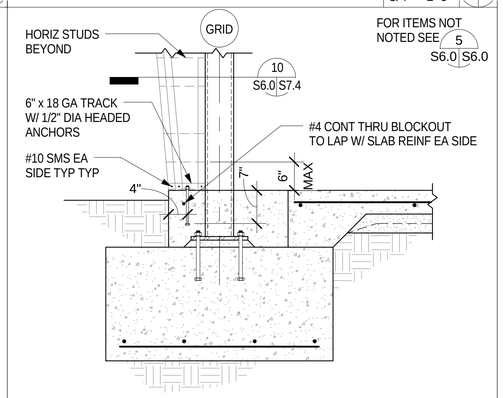

EXT COL FOOTING — SCALE: 3/4" = 1'-0" — 7 / S3.0 S6.0

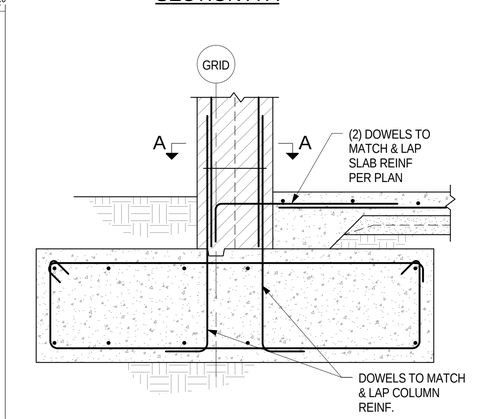

GRADE BEAM AT PILASTER — SCALE: 3/4" = 1'-0" — 4 / S3.0 S6.0

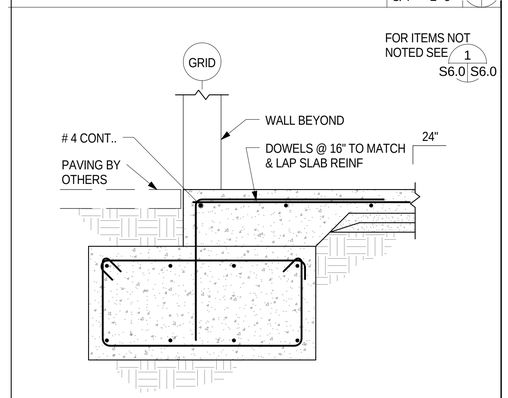

GRADE BEAM AT WALL OPENING — SCALE: 2 / 3/4" = 1'-0" — S3.0 S6.0

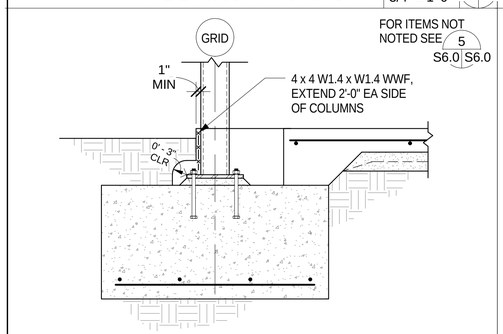

EXT COL FOOTING AT COLUMN — SCALE: 3/4" = 1'-0" — 14 / S3.0 S6.0

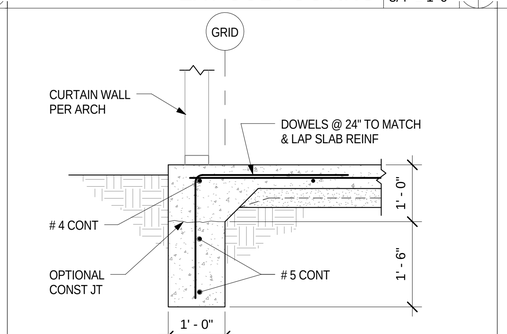

TURNDOWN — SCALE: 3/4" = 1'-0" — 8 / S3.0 S6.0

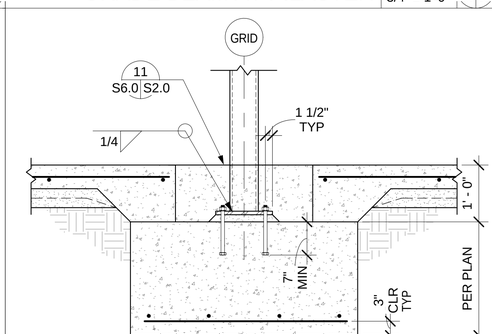

INT COL FOOTING — SCALE: 3/4" = 1'-0" — 5 / S3.0 S6.0

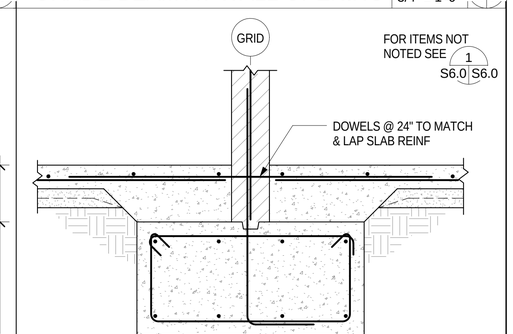

GRADE BEAM AT INT WALL — SCALE: 3/4" = 1'-0" — 3 / S3.0 S6.0

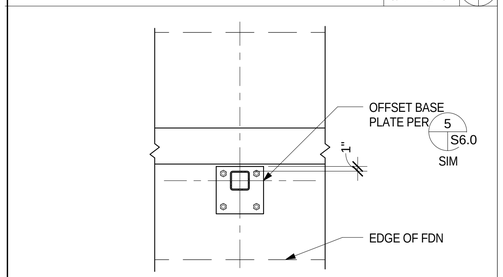

PLAN COLUMN AT CMU WALL — SCALE: 3/4" = 1'-0" — 15 / S3.0 S6.0

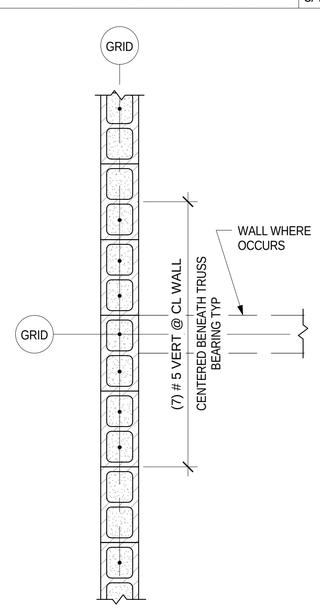

PLAN VIEW

TRUSS BRG AT WALL — SCALE: 3/4" = 1'-0" — 11 / S3.0 S6.0

SDSE Structural Engineers

DEVELOPMENT ONE, INC.
1611 East Fourth Street, Suite 250
Santa Ana, California 92701
J. Bruce Camino, Architect, AIA, NCARB
(714) 689-0298
(714) 648-0197 FAX

DATE	SYM	REVISION	BY	A'PD

NATIONAL AERONAUTICS AND SPACE ADMINISTRATION

DRYDEN FLIGHT RESEARCH CENTER
EDWARDS, CA

DRAWING TITLE

FOUNDATION DETAILS

PROJECT TITLE

FACILITIES SUPPORT CENTER BUILDING
100% FINAL DESIGN SUBMITTAL

APPROVALS	DATE
Chief, Facilities Engineering Division, Project Manager DAN CROWLEY	4/14/11
Project Requestor /Customer DAN CROWLEY	4/14/11
Facilities Project Manager GEMMA FLORES	4/14/11
Chief, Office of Protective Services JOHN ZELLMER	4/14/11
Chief - Safety, Health, and Environmental Office DAN MULLEN	4/14/11
DFRC Chief Information Officer KEN NORLIN	4/14/11

DATE STRTD	11/04/10	DATE PRNTD	03/14/11
DRAWN BY		EDM-1703	
SCALE	AS NOTED	TRADE SH. No. S6.0	
FILE NAME		SHEET No. 106 of 193	

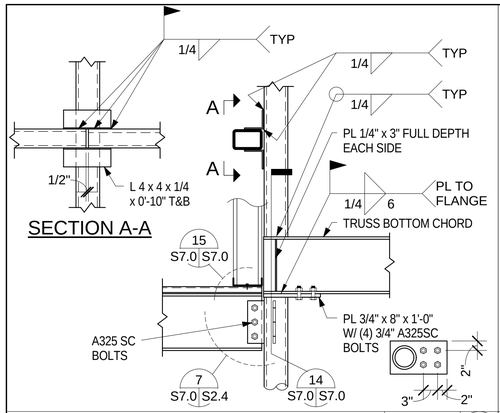

BEAM AND TRUSS AT COL — SCALE: 3/4" = 1'-0" — 13 S3.2 S7.0

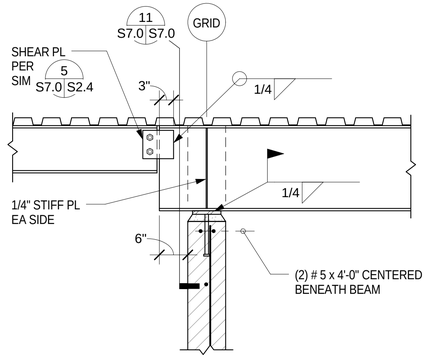

BEAM CANTILEVER AT ROOF — SCALE: 3/4" = 1'-0" — 10 S3.2 S7.0

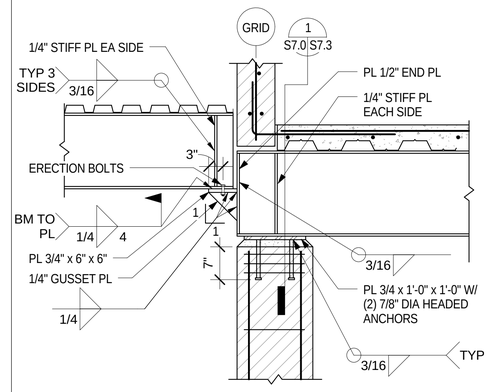

BEAM CANTILEVER — SCALE: 3/4" = 1'-0" — 7 S3.2 S7.0

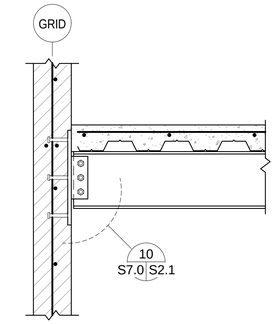

BEAM BRG AT CMU WALL — SCALE: 3/4" = 1'-0" — 4 S3.2 S7.0

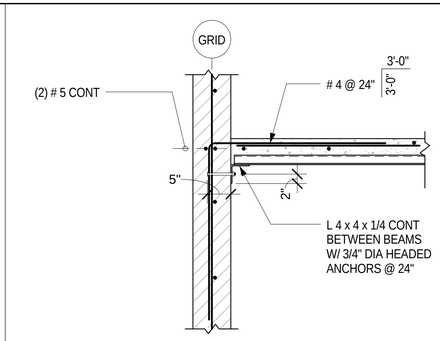

FLOOR DECK BRG AT CMU WALL — SCALE: 3/4" = 1'-0" — 1 S3.2 S7.0

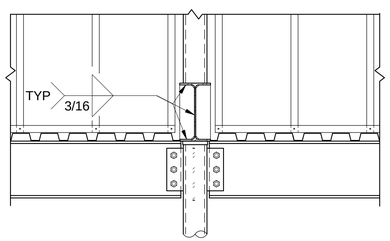

TRUSS BRG — SCALE: 3/4" = 1'-0" — 14 S7.0

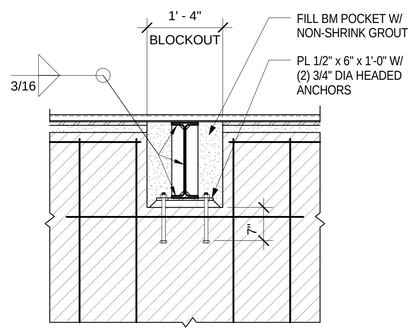

BEAM POCKET AT CMU WALL — SCALE: 3/4" = 1'-0" — 11 S7.0

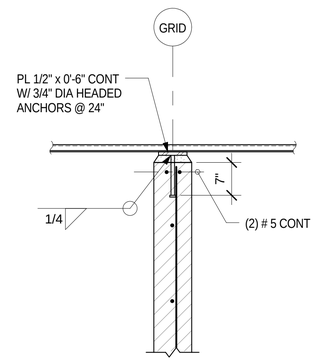

ROOF DECK BRG AT CMU WALL — SCALE: 3/4" = 1'-0" — 8 S3.2 S7.0

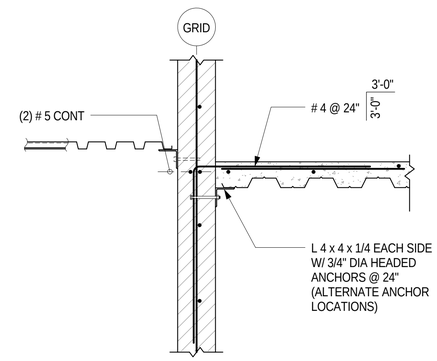

FLOOR AND ROOF AT CMU WALL — SCALE: 3/4" = 1'-0" — 5 S3.2 S7.0

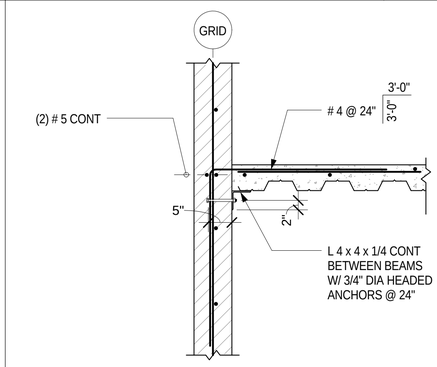

FLOOR DECK EDGE AT CMU WALL — SCALE: 3/4" = 1'-0" — 2 S3.2 S7.0

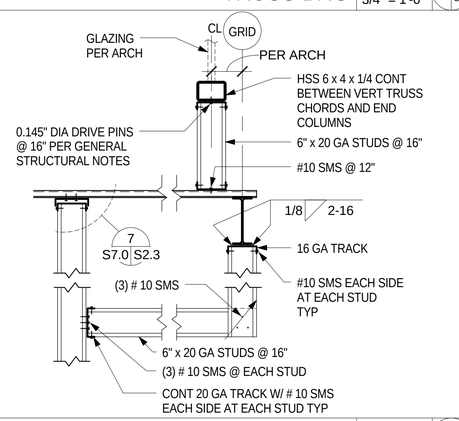

STUD SOFFIT FRAMING — SCALE: 3/4" = 1'-0" — 15 S3.2 S7.0

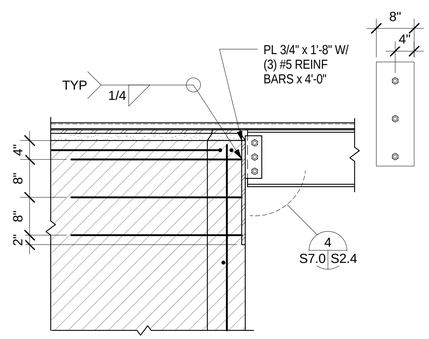

DRAG BEAM AT CMU WALL — SCALE: 3/4" = 1'-0" — 12 S3.2 S7.0

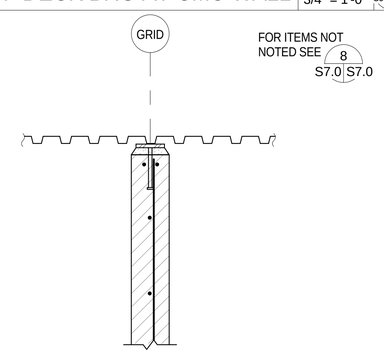

ROOF DECK AT CMU WALL — SCALE: 3/4" = 1'-0" — 9 S3.2 S7.0

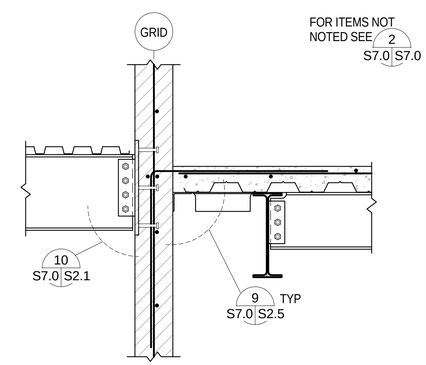

ROOF BM AT CMU WALL — SCALE: 3/4" = 1'-0" — 6 S3.2 S7.0

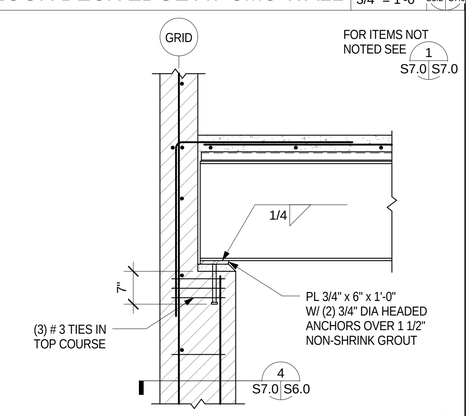

BEAM BRG AT PILASTER — SCALE: 3/4" = 1'-0" — 3 S3.2 S7.0

REGISTERED PROFESSIONAL ENGINEER CHRISTOPHER M. JOHNSON C 052794 Exp. 3-31-12 STRUCTURAL STATE OF CALIFORNIA

SDSE Structural Engineers

DEVELOPMENT ONE, INC.
1611 East Fourth Street, Suite 250
Santa Ana, California 92701
J. Bruce Camino, Architect, AIA, NCARB
(714) 689-0298
(714) 648-0197 FAX

DATE	SYM	REVISION	BY	A'PD

NATIONAL AERONAUTICS AND SPACE ADMINISTRATION

DRYDEN FLIGHT RESEARCH CENTER
EDWARDS, CA

DRAWING TITLE

FRAMING DETAILS

PROJECT TITLE

FACILITIES SUPPORT CENTER BUILDING
100% FINAL DESIGN SUBMITTAL

APPROVALS	DATE
Chief, Facilities Engineering Division/Project Office DAN CROWLEY	4/14/11
Project Requestor /Customer DAN CROWLEY	4/14/11
Facilities Project Manager GEMMA FLORES	4/14/11
Chief, Office of Protective Services JOHN ZELLMER	04/14/11
Chief - Safety, Health, and Environmental Office DAN MULLEN	4/14/11
DFRC Chief Information Officer KEN NORLIN	4/14/11

DATE STRTD	11/04/10	DATE PRNTD	03/14/11
DRAWN BY		EDM-1703	
SCALE	AS NOTED	TRADE SH. No.	S7.0
FILE NAME		SHEET No. 107 of 193	

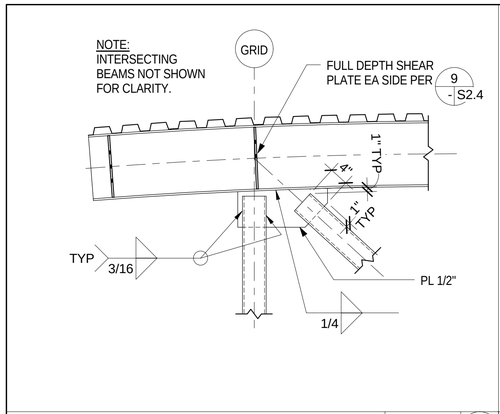

TRUSS TOP CHORD AT END — SCALE: 3/4" = 1'-0" — 13 S3.4 S7.1

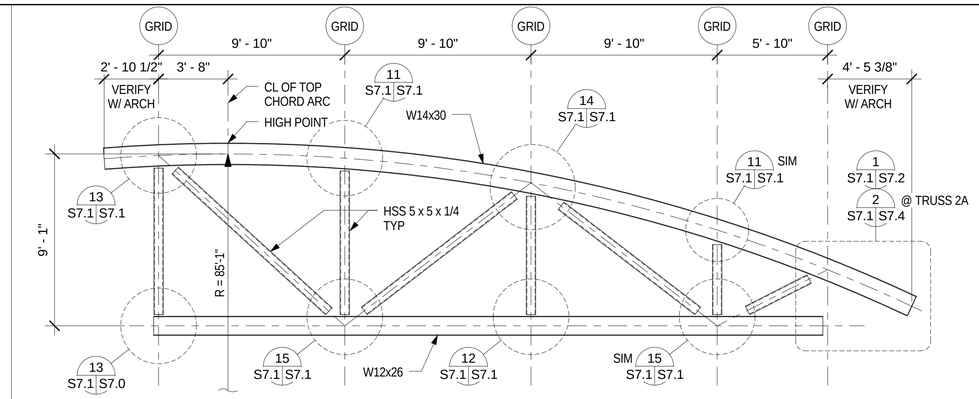

TRUSS 2 ELEVATION — SCALE: 1/4" = 1'-0" — 7 S7.1

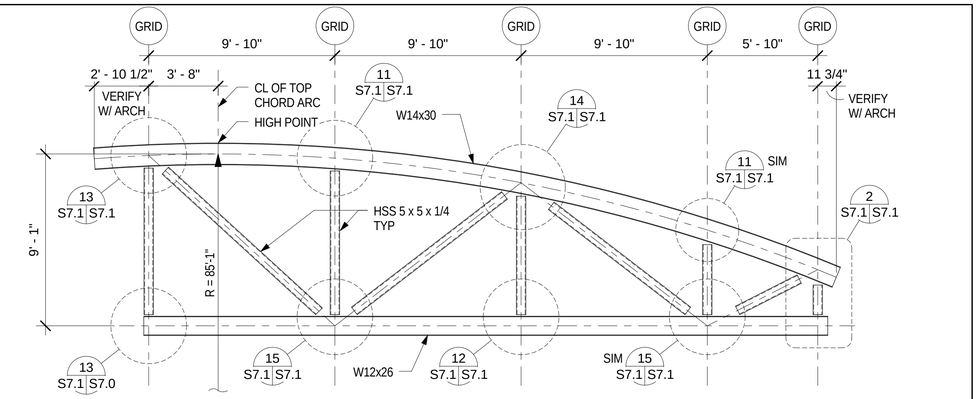

TRUSS 1 ELEVATION — SCALE: 1/4" = 1'-0" — 1 S7.1

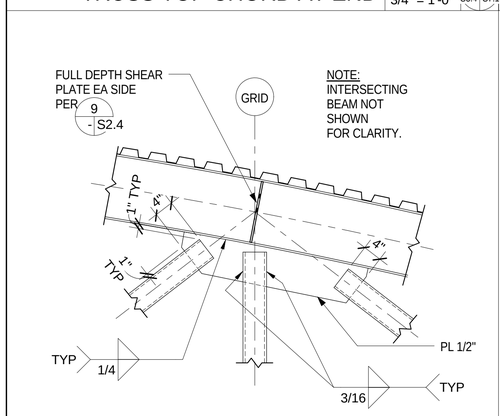

TRUSS TOP CHORD AT VERT/ DIAG — SCALE: 3/4" = 1'-0" — 14 S7.1

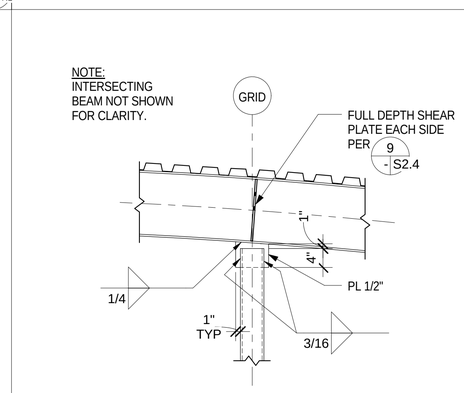

TRUSS TOP CHORD AT VERTICAL — SCALE: 3/4" = 1'-0" — 11 S7.1

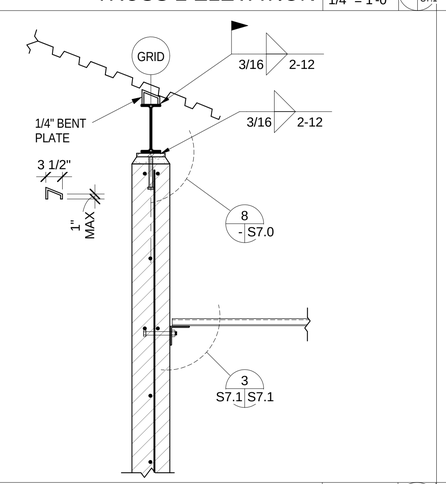

METAL DECK AT CMU WALL — SCALE: 3/4" = 1'-0" — 8 S3.2 S7.1

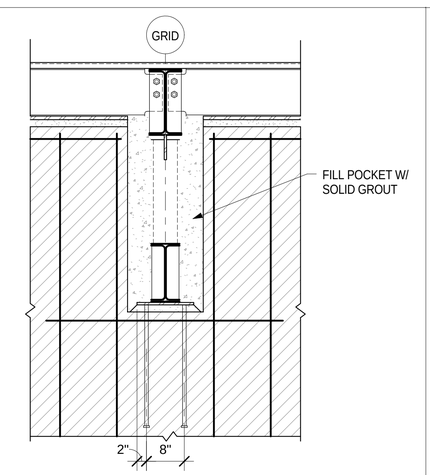

TRUSS POCKET AT CMU WALL — SCALE: 3/4" = 1'-0" — 5 S7.1

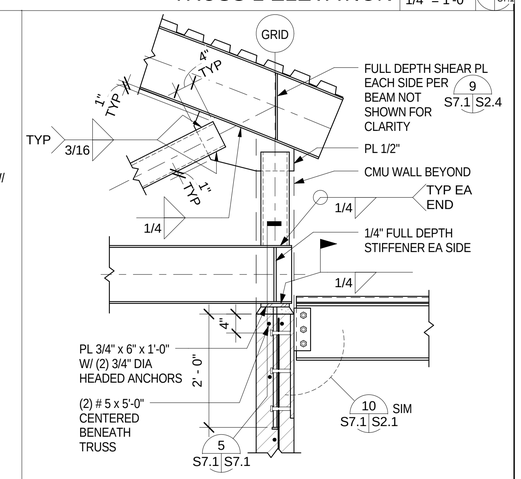

TRUSS BRG AT CMU WALL — SCALE: 3/4" = 1'-0" — 2 S3.2 S7.1

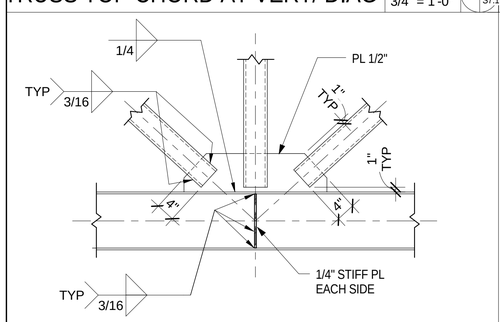

TRUSS BOT CHORD AT VERT/DIAG — SCALE: 3/4" = 1'-0" — 15 S7.1

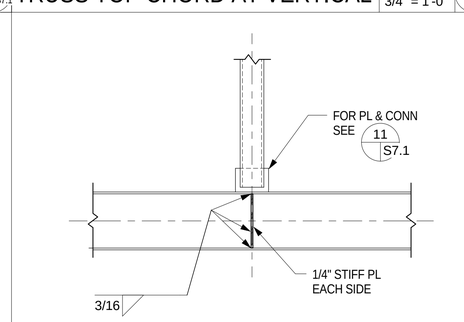

TRUSS BOT CHORD AT VERT — SCALE: 3/4" = 1'-0" — 12 S7.1

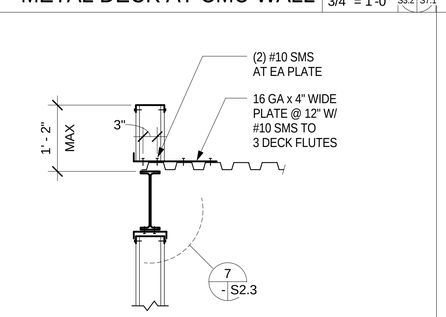

METAL STUD PARAPET — SCALE: 3/4" = 1'-0" — 9 S3.2 S7.1

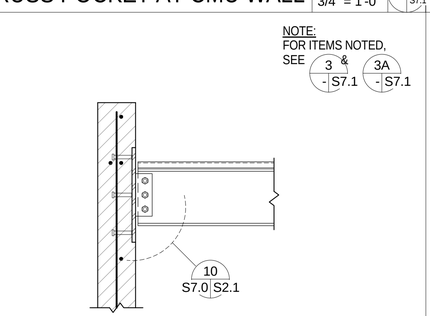

BEAM TO CMU CONNECTION — SCALE: 3/4" = 1'-0" — 6 S3.2 S7.1

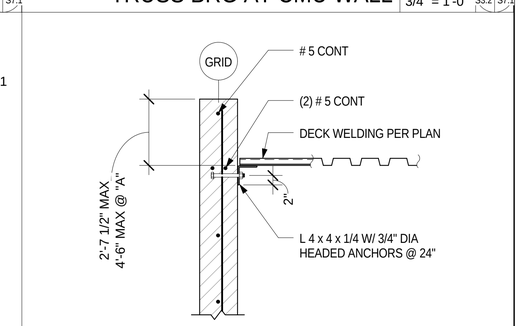

DECK BRG AT WALL — SCALE: 3/4" = 1'-0" — 3A S3.4 S7.1 — 3 S7.1

SDSE Structural Engineers

DEVELOPMENT ONE, INC.
1611 East Fourth Street, Suite 250
Santa Ana, California 92701
J. Bruce Camino, Architect, AIA, NCARB
(714) 689-0298
(714) 648-0197 FAX

DATE	SYM	REVISION	BY	A'PD

NATIONAL AERONAUTICS AND SPACE ADMINISTRATION
DRYDEN FLIGHT RESEARCH CENTER
EDWARDS, CA

DRAWING TITLE: FRAMING DETAILS

PROJECT TITLE: FACILITIES SUPPORT CENTER BUILDING 100% FINAL DESIGN SUBMITTAL

APPROVALS	DATE
Chief, Facilities Engineering Division: DAN CROWLEY	4/14/11
Project Requestor /Customer: DAN CROWLEY	4/14/11
Facilities Project Manager: GEMMA FLORES	4/14/11
Chief, Office of Protective Services: JOHN ZELLMER	4/14/11
Chief - Safety, Health, and Environmental Office: DAN MULLEN	4/14/11
DFRC Chief Information Officer: KEN NORLIN	4/14/11

DATE STRTD	11/04/10	DATE PRNTD	03/14/11
DRAWN BY		EDM-1703	
SCALE	AS NOTED	TRADE SH. No.	S7.1
FILE NAME		SHEET No. 108 of 193	

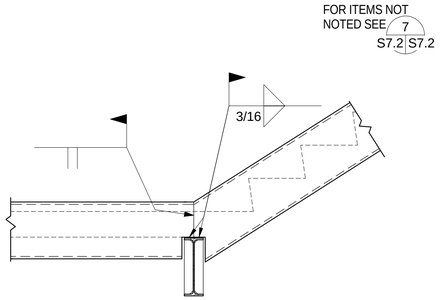

STAIR AT LANDING EDGE UP — SCALE: 3/4" = 1'-0" — 10 S7.2

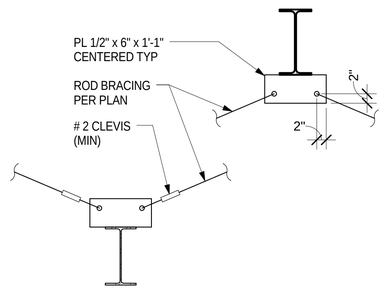

ROD BRACING CONNECTIONS — SCALE: 3/4" = 1'-0" — 6 S7.2

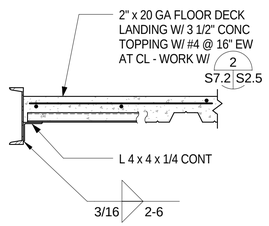

STAIR LANDING EDGE — SCALE: 3/4" = 1'-0" — 11 S7.2

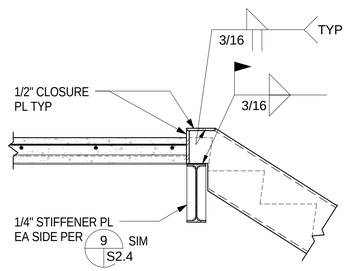

STAIR AT FLOOR DN — SCALE: 3/4" = 1'-0" — 7 S3.2 S7.2

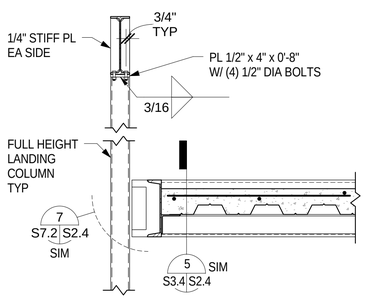

COLUMN AT STAIR LANDING — SCALE: 3/4" = 1'-0" — 12 S3.2 S7.2

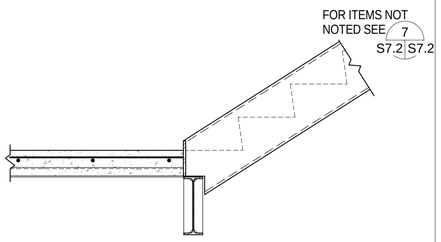

STAIR AT LANDING UP — SCALE: 3/4" = 1'-0" — 8 S3.2 S7.2

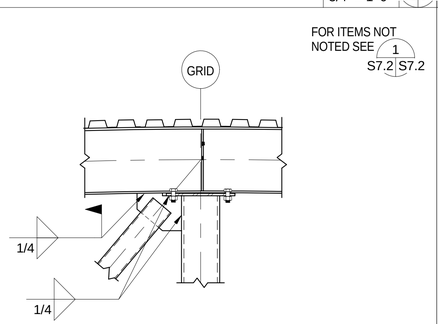

TRUSS WEB TO COLUMN — SCALE: 3/4" = 1'-0" — 13 S7.2

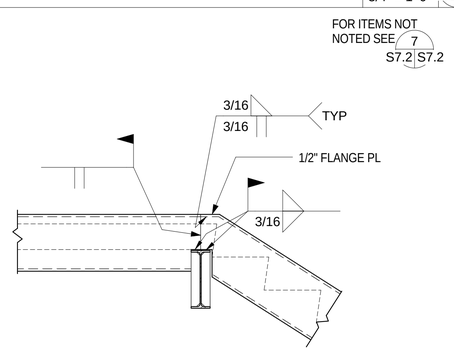

STAIR AT LANDING EDGE DN — SCALE: 3/4" = 1'-0" — 9 S7.2

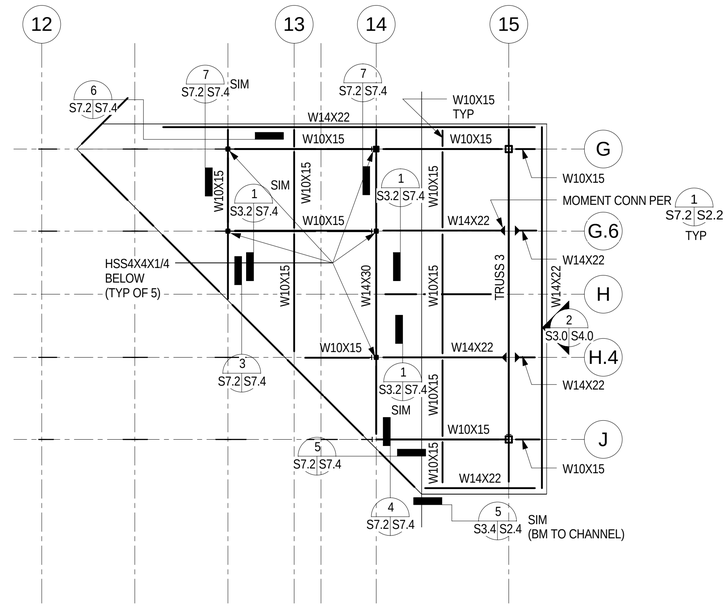

CANOPY FRAMING PLAN — SCALE: 1/8" = 1'-0" — 4 S7.2

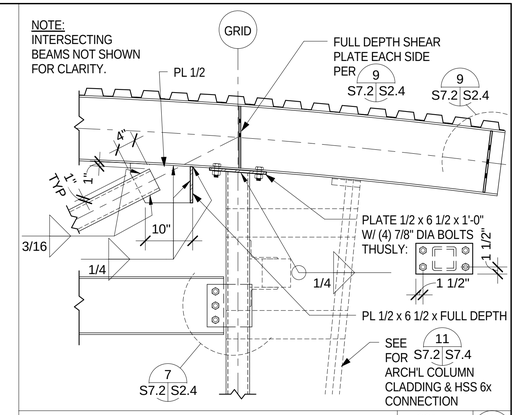

TRUSS BRG AT COLUMN — SCALE: 3/4" = 1'-0" — 1 S3.4 S7.2

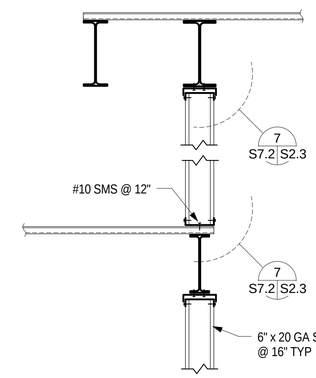

HIGH/LOW ROOF AT STUD WALL — SCALE: 3/4" = 1'-0" — 2 S3.2 S7.2

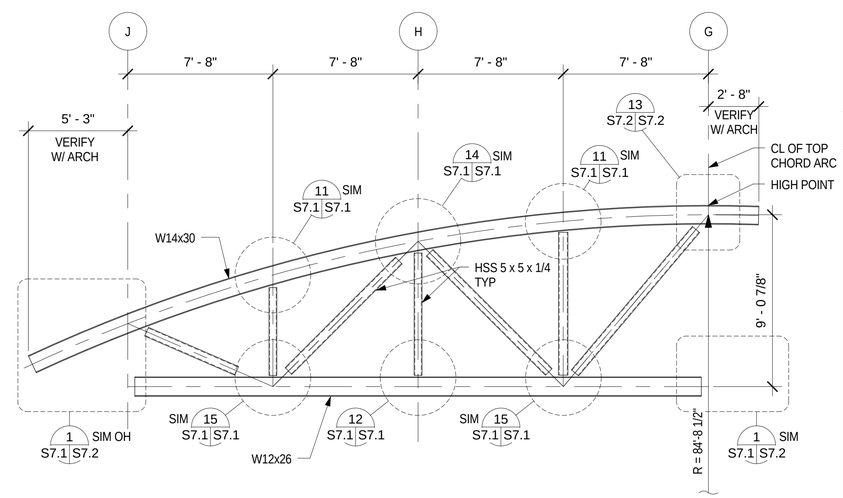

TRUSS 3 ELEVATION — SCALE: 1/4" = 1'-0" — 5 S7.2

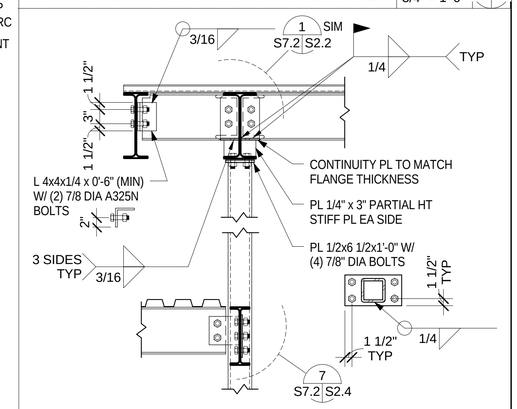

HIGH/LOW ROOF AT COLUMN — SCALE: 3/4" = 1'-0" — 3 S3.2 S7.2

SDSE Structural Engineers

DEVELOPMENT ONE, INC.
1611 East Fourth Street, Suite 250
Santa Ana, California 92701
J. Bruce Camino, Architect, AIA, NCARB
(714) 689-0298
(714) 648-0197 FAX

DATE	SYM	REVISION	BY	A'PD

NATIONAL AERONAUTICS AND SPACE ADMINISTRATION

DRYDEN FLIGHT RESEARCH CENTER
EDWARDS, CA

DRAWING TITLE

FRAMING DETAILS

PROJECT TITLE

FACILITIES SUPPORT CENTER BUILDING
100% FINAL DESIGN SUBMITTAL

APPROVALS	DATE
Chief, Facilities Engineering Division/Project Office DAN CROWLEY	4/14/11
Project Requestor /Customer DAN CROWLEY	4/14/11
Facilities Project Manager GEMMA FLORES	4/14/11
Chief, Office of Protective Services JOHN ZELLMER	4/14/11
Chief - Safety, Health, and Environmental Office DAN MULLEN	4/14/11
DFRC Chief Information Officer KEN NORLIN	4/14/11

DATE STRTD	11/04/10	DATE PRNTD	03/14/11
DRAWN BY		EDM-1703	
SCALE	AS NOTED	TRADE SH. No.	S7.2
FILE NAME		SHEET No. 109 of 193	

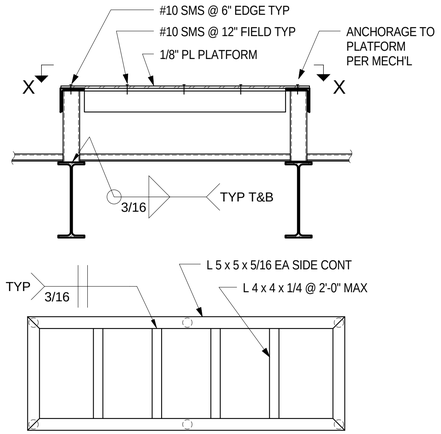

SECTION X-X

MECH PLATFORM — SCALE: 3/4" = 1'-0" — 11 / S3.2 S7.3

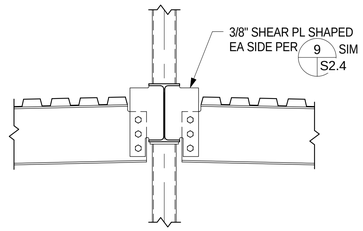

SHAPED SHEAR PL CONN 2 — SCALE: 3/4" = 1'-0" — 7 / S7.3

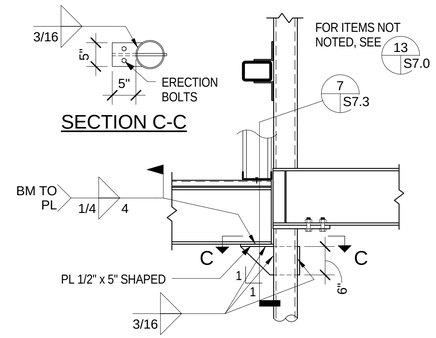

BEAM SEAT 2 — SCALE: 3/4" = 1'-0" — 5 / S3.2 S7.3

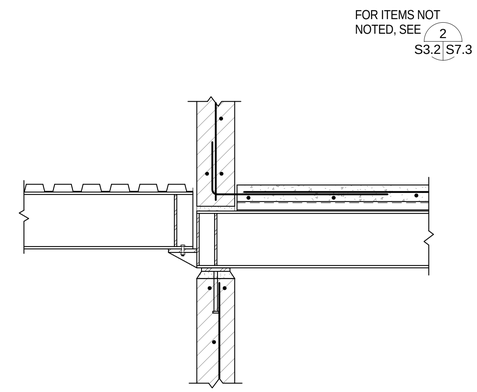

BEAM POCKET FLOOR 2 — SCALE: 3/4" = 1'-0" — 3 / S3.2 S7.3

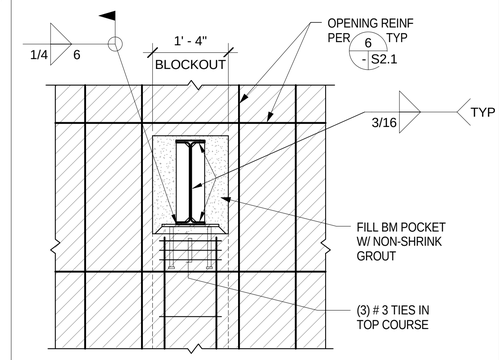

BEAM POCKET AT PILASTER — SCALE: 3/4" = 1'-0" — 1 / S7.0 S7.3

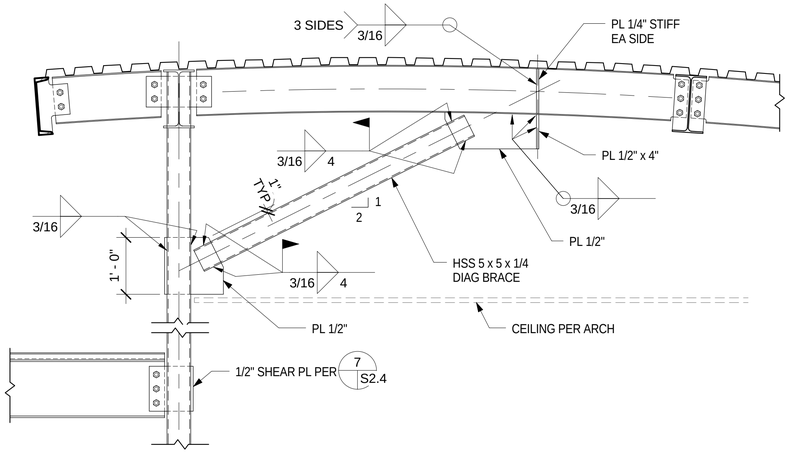

DIAGONAL BRACE — SCALE: 3/4" = 1'-0" — 8 / S3.2 S7.3

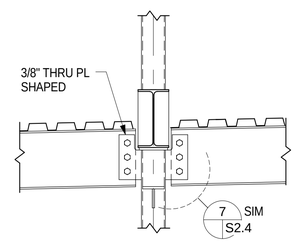

SHAPED SHEAR PL CONN 1 — SCALE: 3/4" = 1'-0" — 6 / S7.3

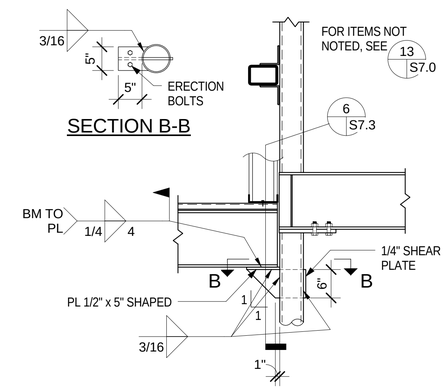

BEAM SEAT 1 — SCALE: 3/4" = 1'-0" — 4 / S3.2 S7.3

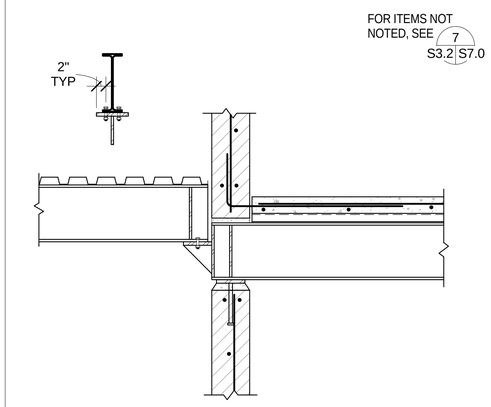

BEAM POCKET AT FLOOR 1 — SCALE: 3/4" = 1'-0" — 2 / S3.2 S7.3

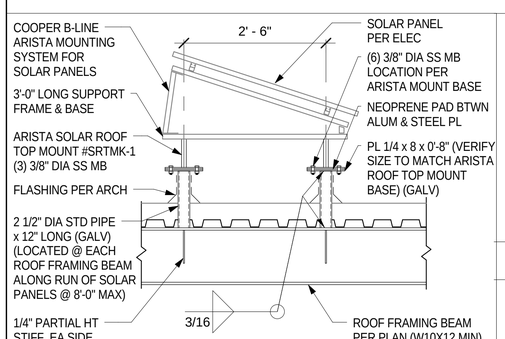

NOTE:

1. COOPER B-LINE ARISTA MOUNTING SYSTEM SHALL BE MANUFACTURED TO RESIST WIND LOADS OF 30.0 PSF DOWNWARD OR UPWARD WITH SUPPORT FRAMES AT 8'-0" O.C. MAX.
2. EXACT LOCATION AND SPACING OF SOLAR PANELS PER ELEC.

2

SOLAR PANEL SUPPORT — SCALE: 3/4" = 1'-0" — 12 / S7.3

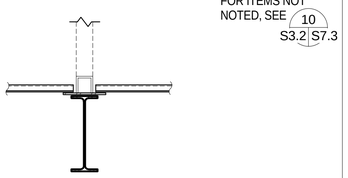

CURB AT MECH UNIT 2 — SCALE: 3/4" = 1'-0" — 9 / S3.2 S7.3

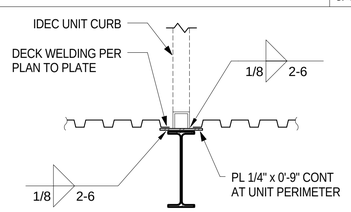

CURB AT MECH UNIT 1 — SCALE: 3/4" = 1'-0" — 10 / S3.2 S7.3

REGISTERED PROFESSIONAL ENGINEER — CHRISTOPHER M. HUNT — No. 2794 — Exp. 3-31-12 — STRUCTURAL — STATE OF CALIFORNIA

SDSE Structural Engineers

DEVELOPMENT ONE, INC.
1611 East Fourth Street, Suite 250
Santa Ana, California 92701
J. Bruce Camino, Architect, AIA, NCARB
(714) 689-0298
(714) 648-0197 FAX

DATE	SYM	REVISION	BY	A'PD

NATIONAL AERONAUTICS AND SPACE ADMINISTRATION

DRYDEN FLIGHT RESEARCH CENTER
EDWARDS, CA

DRAWING TITLE

FRAMING DETAILS

PROJECT TITLE

FACILITIES SUPPORT CENTER BUILDING
100% FINAL DESIGN SUBMITTAL

APPROVALS	DATE
Chief, Facilities Engineering Division/Project Office DAN CROWLEY	4/14/11
Project Requestor /Customer DAN CROWLEY	4/14/11
Facilities Project Manager GEMMA FLORES	4/14/11
Chief, Office of Protective Services JOHN ZELLMER	4/14/11
Chief - Safety, Health, and Environmental Office DAN MULLEN	4/14/11
DFRC Chief Information Officer KEN NORLIN	4/14/11

DATE STRTD	11/04/10	DATE PRNTD	03/14/11
DRAWN BY		EDM-1703	
SCALE	AS NOTED	TRADE SH. No. S7.3	
FILE NAME		SHEET No. 110 of 193	

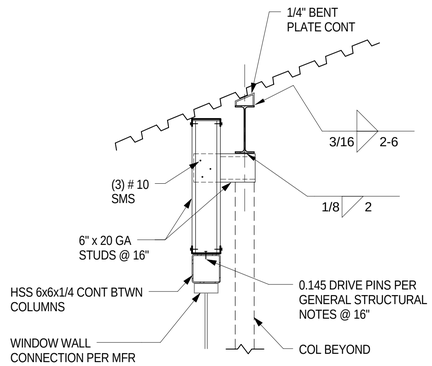

FRAMING DETAIL K — SCALE: 3/4" = 1'-0" — 9 / S3.4 S7.4

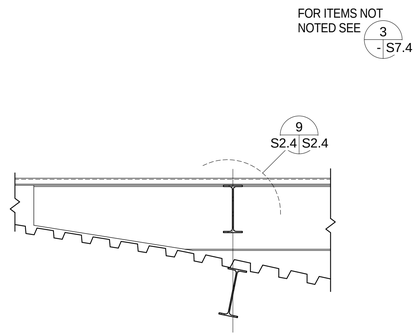

CANOPY DETAIL E — SCALE: 3/4" = 1'-0" — 6 / S7.2 S7.4

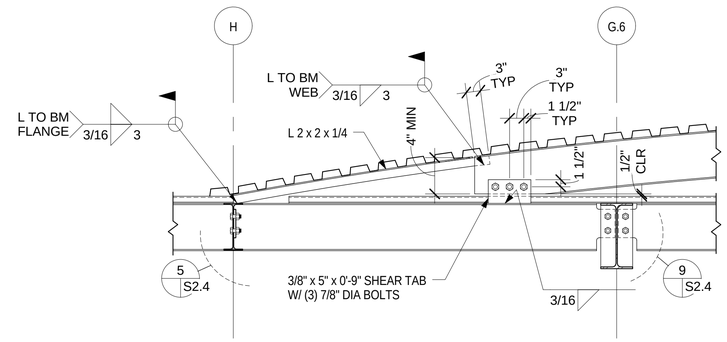

CANOPY DECK DETAIL B — SCALE: 3/4" = 1'-0" — 3 / S7.2 S7.4

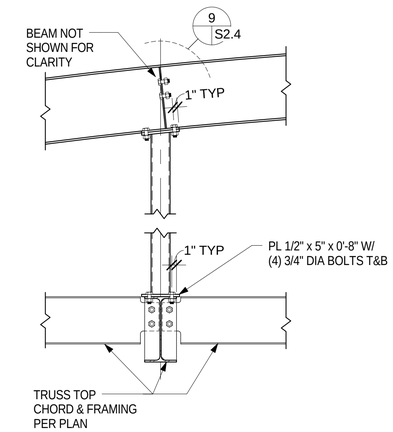

CANOPY POST DETAIL — SCALE: 3/4" = 1'-0" — 1 / S3.2 S7.4

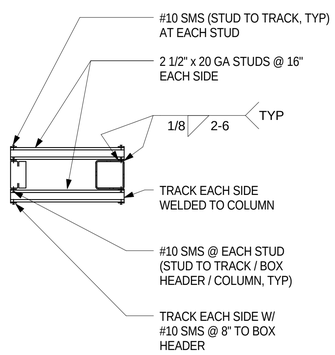

FRAMING DETAIL L — SCALE: 3/4" = 1'-0" — 10 / S6.0 S7.4

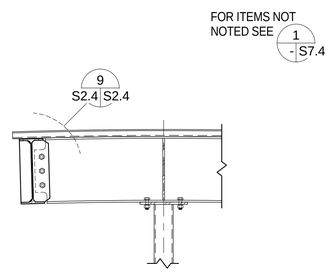

CANOPY DETAIL F — SCALE: 3/4" = 1'-0" — 7 / S7.2 S7.4

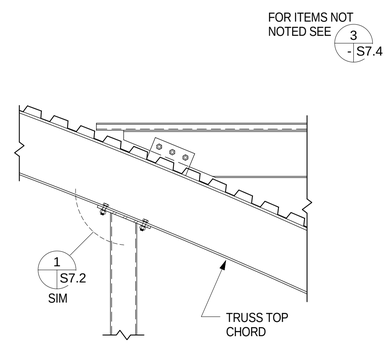

CANOPY DETAIL D — SCALE: 3/4" = 1'-0" — 5 / S7.2 S7.4

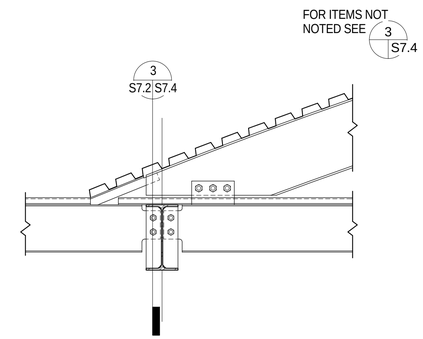

CANOPY DECK DETAIL C — SCALE: 3/4" = 1'-0" — 4 / S7.2 S7.4

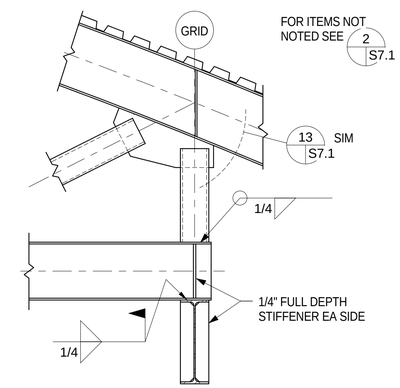

TRUSS 2A BRG AT BEAM — SCALE: 3/4" = 1'-0" — 2 / S3.2 S7.4

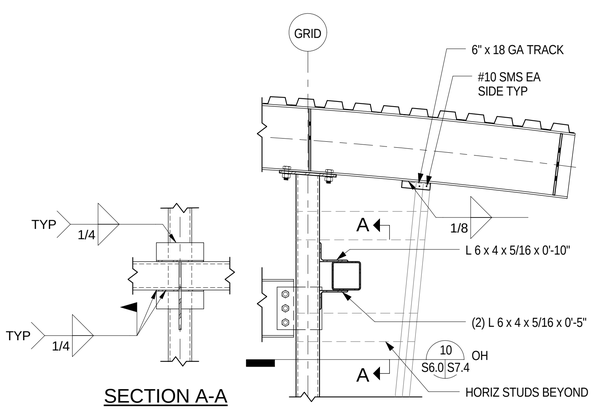

CLADDING AT COLUMN CONN — SCALE: 3/4" = 1'-0" — 11 / S7.4

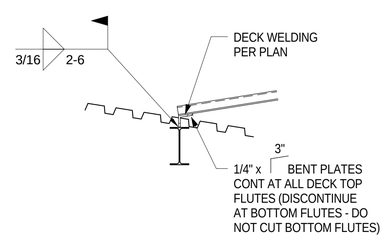

CANOPY DETAIL G — SCALE: 3/4" = 1'-0" — 8 / S3.4 S7.4

REGISTERED PROFESSIONAL ENGINEER CHRISTOPHER M. TOMPKINS C 2794 Exp. 3-31-12 STRUCTURAL STATE OF CALIFORNIA

SDSE Structural Engineers

DEVELOPMENT ONE, INC.
1611 East Fourth Street, Suite 250
Santa Ana, California 92701
J. Bruce Camino, Architect, AIA, NCARB
(714) 689-0298
(714) 648-0197 FAX

DATE	SYM	REVISION	BY	A'PD

NATIONAL AERONAUTICS AND SPACE ADMINISTRATION

DRYDEN FLIGHT RESEARCH CENTER
EDWARDS, CA

DRAWING TITLE

FRAMING DETAILS

PROJECT TITLE

FACILITIES SUPPORT CENTER BUILDING
100% FINAL DESIGN SUBMITTAL

APPROVALS	DATE
Chief, Facilities Engineering & Asset Mgt Office **DAN CROWLEY**	4/14/11
Project Requestor /Customer **DAN CROWLEY**	4/14/11
Facilities Project Manager **GEMMA FLORES**	4/14/11
Chief, Office of Protective Services **JOHN ZELLMER**	4/14/11
Chief - Safety, Health, and Environmental Office **DAN MULLEN**	4/14/11
DFRC Chief Information Officer **KEN NORLIN**	4/14/11

DATE STRTD	11/04/10	DATE PRNTD	03/14/11
DRAWN BY		EDM-1703	
SCALE	AS NOTED	TRADE SH. No.	S7.4
FILE NAME		SHEET No. 111 of 193	

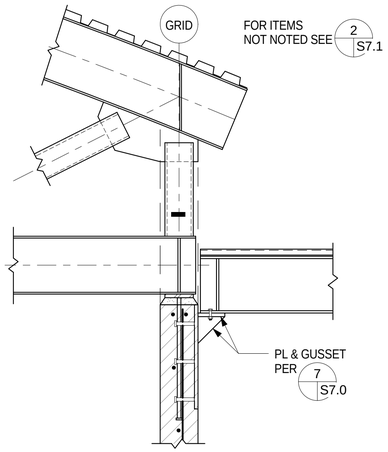

BEAM TO CMU — SCALE: 3/4" = 1'-0" — 14 S3.2 S7.5

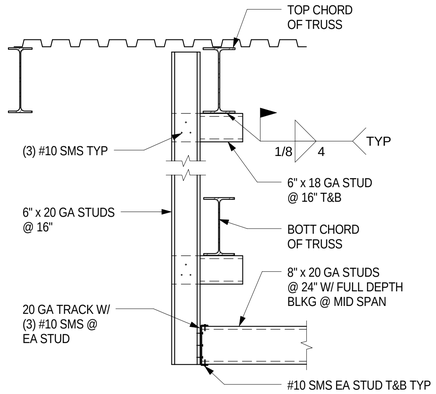

EXTERIOR STUDS AT CANOPY — SCALE: 3/4" = 1'-0" — 10 S3.2 S7.5

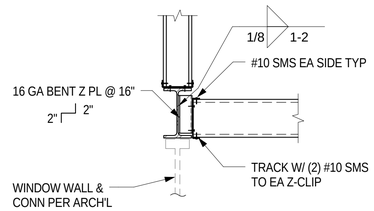

STUD CONN TO BM AT WDW WALL — SCALE: 3/4" = 1'-0" — 7 S3.2 S7.5

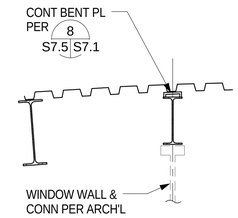

WINDOW WALL TO BM CONN — SCALE: 3/4" = 1'-0" — 4 S3.4 S7.5

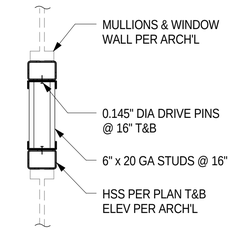

WINDOW WALL BEAM DETAIL — SCALE: 3/4" = 1'-0" — 1 S3.2 S7.5

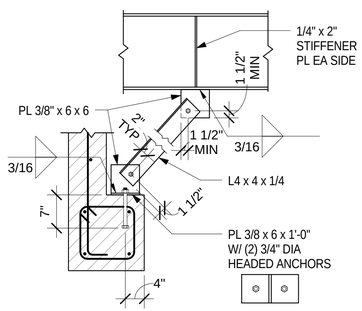

BRACE AT CMU HEADER — SCALE: 3/4" = 1'-0" — 15 S3.4 S7.5

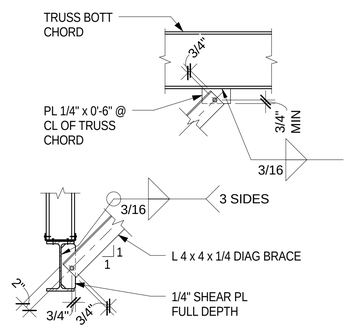

BEAM BRACE — SCALE: 3/4" = 1'-0" — 11 S3.2 S7.5

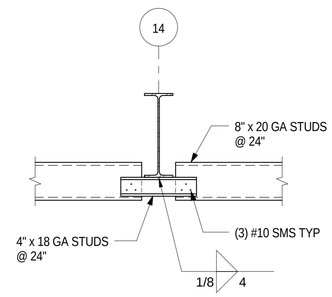

STUD CONN TO BEAM — SCALE: 3/4" = 1'-0" — 8 S3.2 S7.5

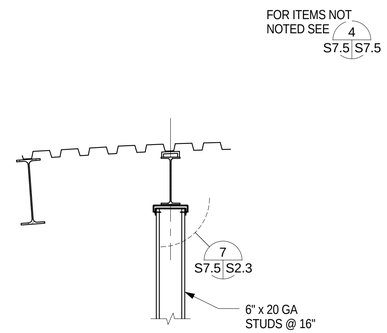

STUD WALL TO BM CONN — SCALE: 3/4" = 1'-0" — 5 S3.4 S7.5

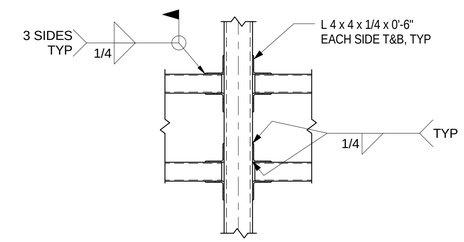

WINDOW WALL BEAM TO COL — SCALE: 3/4" = 1'-0" — 2 S3.2 S7.5

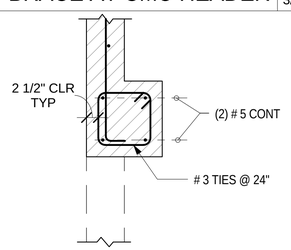

CMU HEADER — SCALE: 3/4" = 1'-0" — 13 S3.2 S7.5

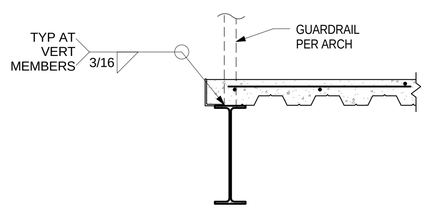

GUARDRAIL TO BEAM — SCALE: 3/4" = 1'-0" — 12 S3.2 S7.5

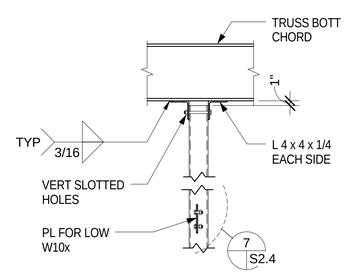

COL TO TRUSS BOTT CHORD — SCALE: 3/4" = 1'-0" — 9 S3.2 S7.5

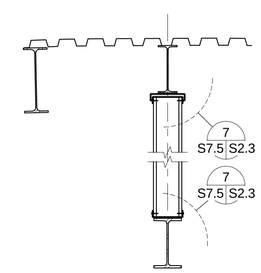

STUD WALL AT CANOPY — SCALE: 3/4" = 1'-0" — 6 S3.4 S7.5

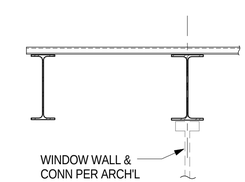

WINDOW WALL TO BM CONN 2 — SCALE: 3/4" = 1'-0" — 3 S3.4 S7.5

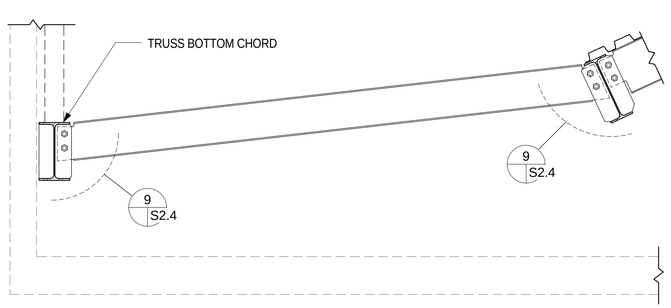

CANOPY DIAG BEAM — SCALE: 3/4" = 1'-0" — 16 S3.2 S7.5

SDSE Structural Engineers

DEVELOPMENT ONE, INC.
1611 East Fourth Street, Suite 250
Santa Ana, California 92701
J. Bruce Camino, Architect, AIA, NCARB
(714) 689-0298
(714) 648-0197 FAX

DATE	SYM	REVISION	BY	A'PD

NATIONAL AERONAUTICS AND SPACE ADMINISTRATION

DRYDEN FLIGHT RESEARCH CENTER
EDWARDS, CA

DRAWING TITLE

FRAMING DETAILS

PROJECT TITLE

FACILITIES SUPPORT CENTER BUILDING
100% FINAL DESIGN SUBMITTAL

APPROVALS	DATE
Chief, Facilities Engineering Division / Acting Chief, Design Branch DAN CROWLEY	4/14/11
Project Requestor /Customer DAN CROWLEY	4/14/11
Facilities Project Manager GEMMA FLORES	4/14/11
Chief, Office of Protective Services JOHN ZELLMER	4/14/11
Chief - Safety, Health, and Environmental Office DAN MULLEN	4/14/11
DFRC Chief Information Officer KEN NORLIN	4/14/11

DATE STRTD	11/04/10	DATE PRNTD	03/14/11
DRAWN BY		EDM-1703	
SCALE	AS NOTED	TRADE SH. No. S7.5	
FILE NAME		SHEET No. 112 of 193	

ABBREVIATIONS

NOTE:
ABBREVIATIONS LISTED ARE FOR GENERAL USE. DISREGARD THOSE WHICH ARE NOT USED ON DRAWING.

ABBREV.	DESCRIPTION
ACCH	AIR COOLED CHILLER
ACCU	AIR COOLED CONDENSING UNIT
AF	AIR FOIL
AFC	ABOVE FINISHED CEILING
AFF	ABOVE FINISHED FLOOR
AFG	ABOVE FINISHED GRADE
AHU	AIR HANDLING UNIT
AMPS	AMPERES
APD	AIR PRESSURE DROP
AV	AIR VENT
BD	BACKDRAFT DAMPER
BFF	BELOW FINISHED FLOOR
BLDG	BUILDING
BOD	BOTTOM OF DUCT
BTU	BRITISH THERMAL UNIT
CD	CONDENSATE DRAIN
CFH	CUBIC FEET PER HOUR
CFM	CUBIC FEET PER MINUTE
CFSD	COMBINATION FIRE/SMOKE DAMPER
CW	COLD WATER
DB	DRY BULB
dB	DECIBEL
DC	DIRECT CURRENT
DEG	DEGREES
DIA	DIAMETER
DIM	DIMENSION
DISC	DISCONNECT
DN	DOWN
DWG(S)	DRAWING(S)
DX	DIRECT EXPANSION
EA	EXHAUST AIR, EACH
EAT	ENTERING AIR TEMPERATURE
EDB	ENTERING DRY BULB
EF	EXHAUST FAN
EFF	EFFICIENCY
ESP	EXTERNAL STATIC PRESSURE
EWB	ENTERING WET BULB
EXH	EXHAUST
EXIST, (E)	EXISTING
FC	FAN COIL
FD	FIRE DAMPER
FPI	FINS PER INCH
FT	FOOT, FEET
° F	DEGREES FAHRENHEIT
GC	GENERAL CONTRACTOR
GPM	GALLONS PER MINUTE
HD	HEAD, HUB DRAIN
HP	HORSEPOWER, HEAT PUMP
HTG	HEATING
HZ	HERTZ
ID	INSIDE DIAMETER
IN	INCH
IN WG	INCHES WATER GAUGE
IN WC	INCHES OF WATER COLUMN
L	LENGTH
LAT	LEAVING AIR TEMPERATURE
LB(S),#	POUND(S)
LDB	LEAVING DRY BULB
LF	LINEAR FEET
LRA	LOCKED ROTOR AMPS
LWB	LEAVING WET BULB
MAX	MAXIMUM
MBH	1000 BTU PER HOUR
MCA	MINIMUM CIRCUIT AMPACITY
MD	MOTORIZED DAMPER
MFR	MANUFACTURER
MIN	MINIMUM
(N)	NEW
NTS	NOT TO SCALE
OA	OUTSIDE AIR
OBD	OPPOSED BLADE DAMPER
OD	OUTSIDE DIAMETER
P.D	PRESSURE DROP
POC	POINT OF CONNECTION
PSI	POUNDS PER SQUARE INCH
QTY	QUANTITY
RA	RETURN AIR
RCP	REFLECTED CEILING PLAN, REINFORCED CONCRETE PIPE
REQD	REQUIRED
RH	RELATIVE HUMIDITY
RHG	REFRIGERANT HOT GAS
RL	REFRIGERANT LIQUID
RLA	RUNNING LOAD AMPS
RPM M	REVOLUTIONS PER MINUTE MOTOR
RPM F	REVOLUTIONS PER MINUTE FAN
RS	REFRIGERANT SUCTION
RTU	ROOF TOP UNIT
SA	SUPPLY AIR
SF	SQUARE FEET / SUPPLY FAN
SMACNA	SHEET METAL AND AIR CONDITIONING CONTRACTOR'S NATIONAL ASSOCIATION
SP	STATIC PRESSURE
SPEC	SPECIFICATION
SQ	SQUARE
SS	STAINLESS STEEL, SANITARY SEWER, SERVICE SINK
T	TEMPERATURE, THERMOSTAT
TDH	TOTAL DYNAMIC HEAD
TG	TRANSFER GRILLE
THRU	THROUGH
TSP	TOTAL STATIC PRESSURE
TYP	TYPICAL
U/C	UNDERCUT
V	VOLT
VA	VOLT-AMPERE
VD	VOLUME DAMPER
W	WATT, WIDTH
W/	WITH
W/O	WITHOUT
WB	WET BULB
WC	WATER COLUMN
XFMR	TRANSFORMER

GENERAL & PIPING LEGEND

NOTE:
SYMBOLS LISTED ARE FOR GENERAL USE. DISREGARD THOSE WHICH ARE NOT USED ON DRAWING.

SYMBOL	DESCRIPTION
	EXISTING TO REMAIN
	EXISTING BELOW ROOF
	NEW
	NEW BELOW ROOF
M	MOTOR OPERATED
	PUMP
CHWS	CHWS CHILLED HOT WATER SUPPLY
CHWR	CHWR CHILLED HOT WATER RETURN
HHWR	HHWR HEATING HOT WATER RETURN
HHWR	HHWR HEATING HOT WATER RETURN
	MALE HOSE CONNECTOR
	PIPING REDUCER
	PIPE ANCHOR
	PIPE GUIDE
	PIPE EXPANSION LOOP
	EXPANSION JOINT
	UNION
	FLOW ARROW
	PETE'S PLUG
FS	PADDLE FLOW SWITCH
	PRESSURE REDUCING VALVE
	BALL VALVE
	BUTTERFLY VALVE
	GLOBE VALVE
	GATE VALVE
	DRAIN VALVE
	MANUAL AIR VENT
	AUTO AIR VENT
	FLOW CONTROL VALVE
	THREE-WAY CONTROL VALVE
	TWO-WAY CONTROL VALVE
M	MOTORIZED BUTTERFLY VALVE
	TRIPLE DUTY VALVE
	CHECK VALVE
	CALIBRATED BALANCING VALVE
	UNION
	GAUGE VALVE
	BLIND FLANGE
	GAS COCK
	GAS PRESSURE REGULATOR
	GAS SOLENOID VALVE W/HI-LO FIRE
	RELIEF VALVE
	PETE'S PLUG
	THERMOMETER W/ WELL
	PADDLE TYPE FLOW SWITCH
FS	DIFFERENTIAL PRESSURE FLOW SWITCH
DP	DIFFERENTIAL PRESSURE SENSOR
P	PRESSURE GAUGE
	SENSOR WELL
	PIPE FLEXIBLE CONNECTOR
	STRAINER
	SIDEWALL DIFFUSER - SUPPLY
	CEILING DIFFUSER - SUPPLY
	CEILING SLOT DIFFUSER - SUPPLY / RETURN
	RISER - SUPPLY AIR DUCT
	DROP - SUPPLY AIR DUCT
	SIDEWALL REGISTER - RETURN
	CEILING GRILLE - RETURN
	RISER - RETURN AIR DUCT
	DROP - RETURN AIR DUCT
	SIDEWALL REGISTER - EXHAUST
	CEILING GRILLE - EXHAUST
	RISER - EXHAUST AIR DUCT
	DROP - EXHAUST AIR DUCT
	LINED DUCTWORK
	VOLUME DAMPER
B	BACKDRAFT DAMPER
	DUCT FLEXIBLE CONNECTION
S	DUCT SMOKE DETECTOR
PS	STATIC PRESSURE SENSOR
T	THERMOSTAT (TEMPERATURE SENSOR)
M	MOTORIZED DAMPER
	RECTANGULAR ELBOW WITH TURNING VANES
	TRANSITION
	CAPPED DUCT
D/U	DOOR UNDERCUT
D/L	DOOR LOUVER
CO	CO2 CARBON DIOXIDE SENSOR
T	TSTAT TEMPERATURE SENSOR
	COMBINATION SMOKE/FIRE DAMPER

GENERAL NOTES

1. ALL WORK SHALL BE PERFORMED IN STRICT ACCORDANCE WITH ALL APPLICABLE STATE, NATIONAL, AND LOCAL BUILDING CODES AND STANDARD, INCLUDING THE CBC, CMC, CEC, AND ASHRAE 90.1.
2. PRIOR TO BIDDING, OBTAIN A FULL COPY OF THE PLANS SPECIFICATIONS.
3. THESE DRAWINGS ARE DIAGRAMMATIC. ACTUAL FIELD CONDITIONS MAY VARY AND MUST BE FIELD VALIDATED AND COORDINATED WITH OTHER TRADES PRIOR TO FABRICATION AND CONSTRUCTION.
4. COORDINATE INSTALLATION WITH THE WORK OF OTHER TRADES PRIOR TO STARTING. IN EVENT THAT CONFLICTS ARE FOUND WITH THE WORK OF OTHER TRADES, BRING SUCH CONFLICTS TO THE ARCHITECT'S ATTENTION FOR RESOLUTION PRIOR TO PROCEEDING WITH THE WORK IN THAT AREA.
5. PRIOR TO CONSTRUCTION THE CONTRACTOR SHALL SUBMIT DETAILED SHOP AND VENDOR DRAWINGS IN ADEQUATE DETAIL, ORGANIZED AND MARKED FOR REVIEW BY THE ARCHITECT AND ENGINEER OF RECORD.
6. CONTRACTOR IS RESPONSIBLE FOR PATCHING AND REPAIRING AREAS, PIPING, DUCTWORK, ETC., EXISTING OR NEW, THAT ARE DAMAGED AS A RESULT OF THE WORK. REPAIR TO MATCH EXISTING CONDITIONS.
7. CUTTING OR PENETRATION OF STRUCTURAL MEMBERS IS PROHIBITED WITHOUT THE PRIOR WRITTEN APPROVAL OF THE STRUCTURAL ENGINEER OF RECORD AND THE PROJECT ARCHITECT/OWNER.
8. HORIZONTAL PIPING AND TUBING SHALL BE SUPPORTED AT SUFFICIENTLY CLOSE INTERVALS TO KEEP IT IN ALIGNMENT AND PREVENT EXCESSIVE SAGGING. DO NOT USE WIRE OR PLUMBERS TAPE FOR HANGING OR STRAPPING PIPES.
9. UNIONS SHALL BE PROVIDED AND INSTALLED PRIOR TO EQUIPMENT CONNECTIONS. PROVIDE DIELECTRIC UNIONS, GASKETS AND FASTENERS AT DISSIMILAR METAL CONNECTIONS OR CONTACT POINTS.
10. PROVIDE ADEQUATE SUPPORT (THRUST RESTRAINTS, ETC.) FOR PIPING AT POINTS WHERE EQUIPMENT IS DISCONNECTED FROM THE SYSTEM.
11. EQUIPMENT SHALL BE INSTALLED, DUCTED AND/OR PIPED IN ACCORDANCE APPLICABLE CODES AND MANUFACTURERS RECOMMENDATIONS.
12. ACCURATE "AS-BUILT" DRAWINGS SHALL BE MAINTAINED DURING CONSTRUCTION AND SUBM:TTED FOR APPROVAL UPON COMPLETION OF INSTALLATION.
13. MECHANICAL SYSTEMS SHALL BE TESTED, BALANCED AND OPERATED TO DEMONSTRATE TO THE OWNER OR DESIGNATED REPRESENTATIVE THAT THE INSTALLATION AND PERFORMANCE OF THE SYSTEMS CONFORM TO THE DESIGN INTENT.
14. CONTROL SCHEMATICS ARE INTENDED TO CONVEY OPERATING PRINCIPLES AND INTER-RELATIONSHIPS ONLY. ACTUALSIZING, LOCATION, AND COMPONENTS AND WIRING SHALL BE PER THE MANUFACTURERS RECOMMENDATION AND ALL CODE REQUIREMENTS.

SEISMIC NOTES

1. ANCHORAGE AND/OR SEISMIC RESTRAINTS SHALL BE DESIGNED BY A REGISTERED PROFESSIONAL ENGINEER LICENSED IN THE STATE OF CALIFORNIA.
2. THE ANCHORAGE AND/OR SEISMIC RESTRAINT OF PERMANENT EQUIPMENT AND ASSOCIATED SYSTEMS LISTED SHALL BE DESIGNED TO RESIST THE TOTAL DESIGN SEISMIC FORCES PRESCRIBED IN SECTION 1613 OF THE 2007 CALIFORNIA BUILDING CODE AND CHAPTER 13 OF ASCE 7-05.
3. SEISMIC RESTRAINTS ARE REQUIRED TO BE DESIGN FOR THE FOLLOWING INSTALLATIONS. REFER TO MASON INDUSTRIES, INC. SEISMIC RESTRAINT GUIDELINES FOR ADDITIONAL REQUIREMENTS:

a. FLOOR OR ROOF MOUNTED EQUIPMENT WEIGHT 400 LBS OR GREATER.
b. SUSPENDED OR WALL MOUNTED EQUIPMENT WEIGHT 20 LBS OR GREATER.
c. VIBRATION ISOLATION EQUIPMENT WEIGHING 20 LBS. OR GREATER.
d. PIPING 1-1/4 INCHES NOMINAL DIAMETER AND LARGE FOR COMPONENT IMPORTANCE FACTOR Ip GREATER THAN 1.0.
e. PIPING 3-1/2 INCHES NOMINAL DIAMETER AND LARGER FOR COMPONENT IMPORTANCE FACTOR Ip EQUAL TO 1.0.
f. RECTANGULAR DUCTWORK WHOSE CROSS-SECTIONAL AREA IS LARGER THAN 6-FEET SQUARE. FOR ROUND SHAPED DUCTS, THE DIAMETER SHOULD BE MORE THAN 33 INCHES.
g. PIPES SUPPORTED BY A TRAPEZE WHERE NONE OF THOSE ELEMENTS WOULD INDIVIDUALLY REQUIRE BRACING NEED NOT BE BRACED IF CONNECTIONS TO THE PIPE/DUCT OR DIRECTIONAL CHANGES DO NOT RESTRICT MOVEMENT OF THE TRAPEZE AND THE COMBINED OPERATING WEIGHT OF ALL ELEMENTS SUPPORTED BY THE TRAPEZE IS LESS THAN 5 LBS/FT. BRACING IS REQUIRED IF THIS FLEXIBLITY IS NOT PROVIDED OR THE COMBINED OPERATING WEIGHT OF ALL ELEMENTS SUPPORTED BY THE TRAPEZE IS 5 LBS/FT OR GREATER.

DRAWING/DETAIL REFERENCE KEY

SYMBOL	DESCRIPTION
1	PLAN REFERENCE / KEY NOTE
1	PHOTO REFERENCE / PHOTO DIRECTION
1	REVISION
A	AIR DEVICE CALLOUT
	POINT OF CONNECTION
	POINT OF DISCONNECTION/DEMOLITION

REFER TO
DRAWING/DETAIL NUMBER
RE: 2/M0.01
2 M0.01
4 M3 M9
SHEET NUMBER OF DRAWING/DETAIL
EQUIPMENT TAG
SHEET SHOWN
SHEET REFERENCED TO

EXHAUST GRILLE SCHEDULE

ITEM	MANUFACTURER MODEL NO.	TYPE	MOUNTING	NECK SIZE	OVERALL SIZE	MAX N.C.	MAX P.D.	MAX CFM
CG-1	TITUS 50F 1/2"	EGGCRATE	LAY-IN T-BAR	6x6	24x24	25	0.08	120
CG-2	TITUS 50F 1/2"	EGGCRATE	LAY-IN T-BAR	8x8	24x24	25	0.08	220
CG-3	TITUS 50F 1/2"	EGGCRATE	LAY-IN T-BAR	10x10	24x24	25	0.08	340
CG-4	TITUS 50F 1/2"	EGGCRATE	LAY-IN T-BAR	12x12	24x24	25	0.08	500
CG-5	TITUS 50F 1/2"	EGGCRATE	LAY-IN T-BAR	16x16	24x24	25	0.08	640
CG-6	TITUS 50F 1/2"	EGGCRATE	LAY-IN T-BAR	18x18	24x24	25	0.08	1000
CG-7	TITUS 50F 1/2"	EGGCRATE	SURFACE MOUNTED	6x6	24x24	25	0.08	120
CG-8	TITUS 50F 1/2"	EGGCRATE	SURFACE MOUNTED	8x8	24x24	25	0.08	220
CG-9	TITUS 50F 1/2"	EGGCRATE	SURFACE MOUNTED	10x10	24x24	25	0.08	340
CG-10	TITUS 50F 1/2"	EGGCRATE	SURFACE MOUNTED	12x12	24x24	25	0.08	500
CG-11	TITUS 50F 1/2"	EGGCRATE	SURFACE MOUNTED	16x16	24x24	25	0.08	640
CG-12	TITUS 50F 1/2"	EGGCRATE	SURFACE MOUNTED	6x6	12x12	25	0.08	120
CG-13	TITUS 50F 1/2"	EGGCRATE	SURFACE MOUNTED	10x10	12x12	25	0.08	340
RG	TITUS 350RS	LOUVERED	SURFACE MOUNT	SEE PLANS	SEE PLANS	25	0.08	SEE PLANS

SUPPLY DIFFUSER/GRILLE SCHEDULE

ITEM	MANUFACTURER MODEL NO.	TYPE	MOUNTING	NECK SIZE	OVERALL SIZE	MAX N.C.	MAX P.D.	MAX CFM
CD-1	TITUS OMNI	PLAQUE TYPE	LAY-IN T-BAR	6x6	24x24	25	0.08	120
CD-2	TITUS OMNI	PLAQUE TYPE	LAY-IN T-BAR	8x8	24x24	25	0.08	220
CD-3	TITUS OMNI	PLAQUE TYPE	LAY-IN T-BAR	10x10	24x24	25	0.08	340
CD-4	TITUS OMNI	PLAQUE TYPE	LAY-IN T-BAR	12x12	24x24	25	0.08	500
CD-5	TITUS OMNI	PLAQUE TYPE	LAY-IN T-BAR	16x16	24x24	25	0.08	640
CD-6	TITUS OMNI	PLAQUE TYPE	LAY-IN T-BAR	18x18	24x24	25	0.08	900
CD-7	TITUS OMNI	PLAQUE TYPE	SURFACE MOUNTED	6x6	24x24	25	0.08	120
CD-8	TITUS OMNI	PLAQUE TYPE	SURFACE MOUNTED	8x8	24x24	25	0.08	220
CD-9	TITUS OMNI	PLAQUE TYPE	SURFACE MOUNTED	10x10	24x24	25	0.08	340
CD-10	TITUS OMNI	PLAQUE TYPE	SURFACE MOUNTED	12x12	24x24	25	0.08	500
CD-11	TITUS OMNI	PLAQUE TYPE	SURFACE MOUNTED	16x16	24x24	25	0.08	640
CD-12	TITUS OMNI	PLAQUE TYPE	LAY-IN T-BAR	6x6	12x12	25	0.08	120
CD-13	TITUS TMRA	ADJ. ROUND CLG. DIFFUSER	EXPOSED	12	27"ø	25	0.08	SEE PLANS
SG	TITUS 300RS	DOUBLE DEFLECTION	SURFACE MOUNTED	SEE PLANS	SEE PLANS	25	0.08	SEE PLANS

NOTE:
1. CEILING DIFFUSER THROWS SHALL BE 360° THROW UNLESS OTHERWISE INDICATED.
2. CD-13 SHALL HAVE INTEGRAL ACTUATOR TO CONTROL THROW PATTERN BAS.

STORAGE TANK

SYMBOL	MANUFACTURER MODEL NO.	LOCATION	SERVICE	CAPACITY (GAL.)	DIMENSION		OPERATING WEIGHT (LBS)	REMARKS
					DIAMETER	HEIGHT		
ST 1	WESSELS CBT-200	CHILLER ROOM 205	CHILLED WATER SYSTEM	200	30"	72"	1,985	- WITH BASE RING, WELDED ANGLE CLIPS FOR ANCHORING TO SLAB. - NO INTERIOR LINING. - OR APPROVED EQUAL.

DUST COLLECTOR SCHEDULE

SYMBOL	MANUFACTURER MODEL NO.	LOCATION	CFM	S.P. (INCH)	HP	ELECTRICAL		OPERATING WEIGHT (LBS.)	REMARKS
						VOLT	PHASE		
DC 1	DONALDSON TORIT UMA 450	GRADE	3,000	10	15	460	3	1,500	- OR APPROVED EQUAL.

REGISTERED PROFESSIONAL ENGINEER
DONN C. GILMORE
No. 11541
Exp. 9-30-11
MECHANICAL
STATE OF CALIFORNIA

DONN C. GILMORE & ASSOCIATES, INC.
Consulting Mechanical and Electrical Engineers
DCGA
4051 E. La Palma Ave., Ste. A
Anaheim, CA. 92807
Ph.: 714.630.4291
Fax: 714.630.4805

DATE	SYM	REVISION	BY	A'PD

NATIONAL AERONAUTICS AND SPACE ADMINISTRATION
DRYDEN FLIGHT RESEARCH CENTER
EDWARDS, CA

DRAWING TITLE
MECHANICAL GENERAL NOTES, LEGEND, AND SYMBOLS LIST

PROJECT TITLE
FACILITIES SUPPORT CENTER BUILDING
100% FINAL DESIGN SUBMITTAL

APPROVALS	DATE
Chief, Facilities Engineering & Asset Mgmt. Office DAN CROWLEY	4/14/11
Project Requestor /Customer DAN CROWLEY	4/14/11
Facilities Project Manager GEMMA FLORES	4/14/11
Chief, Office of Protective Services JOHN ZELLMER	4/14/11
Chief - Safety, Health, and Environmental Office DAN MULLEN	4/14/11
DFRC Chief Information Officer KEN NORLIN	4/14/11

DATE STRTD	11/08/10	DATE PRNTD	03/14/11
DRAWN BY		EDM-1703	
SCALE	AS NOTED	TRADE SH. No.	M0.1
FILE NAME		SHEET No. 113 of 193	

INDIRECT-DIRECT EVAPORATIVE COOLING UNIT SCHEDULE

SYMBOL	MANUFACTURER AND MODEL	LOCATION	AREA SERVED	SUPPLY FAN								ELECTRICAL				INDIRECT SECTION						DIRECT SECTION						COOLING COIL															
				S.A. (CFM)	S.P. (IN WATER)		FAN TYPE	SPEED (RPM)	BHP	HP	VFD	MCA	MOCP	VOLT	PHASE	EDB/ EWB	VELOCITY (FPM)	EFF. (%)	LDB (°F)	LWB (°F)	P.D. (IN W.G.)	VELOCITY (FPM)	EFF. (%)	LDB (°F)	LWB (°F)	MEDIA THICKNESS (INCHES)	P.D. (IN W.G.)	FACE VEL. (FPM)	NO. OF COILS	MIN. ROWS	FPI	TOTAL CAPACITY (MBH)	SENSIBLE CAPACITY (MBH)	EAT (°F)		LAT (°F)		CHILLED WATER TEMP. (F)		FLOW RATE (GPM)	WATER P.D. (FT)	AIR P.D. (FT)	MEDIUM
					TOTAL	EXT.																													DB	WB	DB	WB	ENT.	LVG.				
IDEC 1	ENERGY LABS CHHHWWW-FCH-L	ROOF	LOBBY 100	3,295	5	2	AF	2,841	4.04	5	YES	16.6	25.0	460	3	106 / 68.5	275	75	78	60.4	0.51	346	90.6	62.1	60.4	12	0.10	296.7	1	2	10	59.3	38.538	74.5	66.5	62.54	60.99	48	58.8	11	3.22	.11	WATER
IDEC 2	ENERGY LABS CHHHWWW-FCH-L	ROOF	OFFICE SUITE 130	4,160	5	2	AF	4.04	4.96	7.5	YES	20.8	30.0	460	3	106 / 68.5	347	70	79.7	61.0	0.80	436	89.4	63	61	12	0.16	313.5	1	2	10	71.8	46.6	74.5	66.5	63.05	61.05	48	58.24	14	6.25	.16	WATER
IDEC 3	ENERGY LABS CHHHWWW-FCH-L	ROOF	OFFICE SUITE 140	4,240	5	2	AF	2,879	5.06	7.5	YES	20.8	30.0	460	3	106 / 68.5	353	70	79.8	61.1	0.83	445	89.3	63.1	61.1	12	0.17	381.8	1	2	10	72.3	47.1	74.5	66.5	63.14	61.11	48	58.32	14	6.25	.16	WATER
IDEC 4	ENERGY LABS CHHHWWW-FCH-L	ROOF	OFFICE SUITE 120	5,100	5	2	AF	2,616	6.17	7.5	YES	21.3	30.0	460	3	106 / 68.5	340	71	79.5	61.0	0.77	403	89.8	62.9	61.0	12	0.14	361.9	1	2	10	93.1	58.9	74.5	66.5	62.68	60.71	48	58.88	17.1	10.48	.15	WATER
IDEC 5	ENERGY LABS CHHHWWW-FCH-L	ROOF	MEZZANINE 200	3,200	5	2	AF	2,804	3.91	5	YES	16.6	25.0	460	3	106 / 68.5	267	75	77.8	60.3	0.48	336	90.7	61.9	60.3	12	0.10	288.2	1	2	10	58.8	37.9	74.5	66.5	62.37	60.67	48	58.69	11	3.22	.10	WATER
IDEC 6	ENERGY LABS CHHHWWW-FCH-L	ROOF	SHOPS 170 & 175	5,225	5	2	AF	2,647	6.35	7.5	YES	21.3	30.0	460	3	106 / 68.5	348	70	79.7	61.0	0.80	413	89.7	62.9	61.0	12	0.15	370.7	1	2	10	93.8	59.7	74.5	66.5	62.81	60.81	48	58.96	17.1	10.48	.15	WATER

INDIRECT-DIRECT EVAPORATIVE COOLING UNIT SCHEDULE (CONTINUED)

SYMBOL	HEATING COIL										MIN. O.A. (CFM)	FILTERS						INTERNAL FAN ISOLATION		OPERATING WEIGHTS (LBS.)	REMARKS
												PRE. FILTER			FINAL FILTER						
	FACE VEL. (FPM)	NO. OF COILS	MIN. ROWS	FPI	CAPACITY (MBH)	EWT (ºF)	LWT (ºF)	FLOW RATE (GPM)	WATER P.D. (F.T.)	AIR P.D. (IN.)		CLEAN P.D. (IN H20)	THICKNESS (INCH)	EFF.	CLEAN P.D. (IN H2O)	THICKNESS (INCH)	EFF.	MOUNT TYPE	MIN. STATIC DEFL. (INCH)		
IDEC 1	170.8	1	1	8	116.2	180	149	7.2	5.29	0.01	1,849	0.25	2	MERV 7	0.50	4	MERV 13	SPRNG	2"	5,100	- COORDINATE WITH ELECTRICAL FOR 120V-1ø-60Hz POWER. - OR APPROVED EQUAL. - PROVIDE "MASON INDUSTRIES" SPRING ISOLATED CURBS OR APPROVED EQUAL.
IDEC 2	115.2	1	1	8	90.3	180	149	5.5	3.3	0.005	1,248	0.25	2	MERV 7	0.50	4	MERV 13	SPRNG	2"	5,150	- COORDINATE WITH ELECTRICAL FOR 120V-1ø-60Hz POWER. - OR APPROVED EQUAL. - PROVIDE "MASON INDUSTRIES" SPRING ISOLATED CURBS OR APPROVED EQUAL.
IDEC 3	117.4	1	1	8	91.2	180	148	5.5	3.3	0.005	1,272	0.25	2	MERV 7	0.50	4	MERV 13	SPRNG	2"	5,150	- COORDINATE WITH ELECTRICAL FOR 120V-1ø-60Hz POWER. - OR APPROVED EQUAL. - PROVIDE "MASON INDUSTRIES" SPRING ISOLATED CURBS OR APPROVED EQUAL.
IDEC 4	109	1	1	8	109.0	180	150	7.0	2.29	0.005	1,530	0.25	2	MERV 7	0.50	4	MERV 13	SPRNG	2"	5,500	- COORDINATE WITH ELECTRICAL FOR 120V-1ø-60Hz POWER. - OR APPROVED EQUAL. - PROVIDE "MASON INDUSTRIES" SPRING ISOLATED CURBS OR APPROVED EQUAL.
IDEC 5	89.1	1	1	8	77.0	180	149	4.7	5.64	0.005	962	0.25	2	MERV 7	0.50	4	MERV 13	SPRNG	2"	5,100	- COORDINATE WITH ELECTRICAL FOR 120V-1ø-60Hz POWER. - OR APPROVED EQUAL. - PROVIDE "MASON INDUSTRIES" SPRING ISOLATED CURBS OR APPROVED EQUAL.
IDEC 6	370	1	1	8	236.0	180	153.5	17.1	2.37	0.06	5,225	0.25	2	MERV 7	0.50	4	MERV 13	SPRNG	2"	5,500	- COORDINATE WITH ELECTRICAL FOR 120V-1ø-60Hz POWER. - OR APPROVED EQUAL. - PROVIDE "MASON INDUSTRIES" SPRING ISOLATED CURBS OR APPROVED EQUAL.

AIR COOLED CHILLER SCHEDULE

SYMBOL	MANUFACTURER AND MODEL	LOCATION	NOM. TOTAL CAP. (TONS)	EER	ELECTRICAL				COMPRESSOR					EVAPORATOR				UNIT SIZE			DESIGN AMB. (ºF)	OPER. WT. (LB)	NOTES
					VOLT	PH	MCA (A)	MOCP (A)	COMP. TYPE	COMP. QTY	REFRIG.	REFRIG. CHARGE (LB)	MIN. AMB. TEMP. (ºF)	FLOW (GPM)	EWT (ºF)	LWT (ºF)	WPD (FT. WG.)	L	W	H			
CH 1	NAPPS NCC40	CHILLER ROOM	40	11.3	460	3	7.7	-	SCROLL	4	R-410 A	115	96	96	58	48	2.6	79"	32 1/4"	68 1/2"	115	1,600	- BACNET INTERFACE. - OR APPROVED EQUAL.

BOILER SCHEDULE

SYMBOL	MANUFACTURER AND MODEL	TYPE	CAPACITY			GPM	WATER (°F)		ELECTRICAL		OPERATING WEIGHT (LBS.)	REMARKS
			INPUT (MBH)	OUTPUT (MBH)	EFF. (%)		ENT TEMP	LVG. TEMP	VOLT	PHASE		
B 1	PARKER T970LR	FORCED DRAFT LOW NOX	970	827	84	55	150	180	115	1	1,870	- PROVIDE 5AMPS, 115V-1Ø-60HZ FOR CONTROLS. - 1/3 HP RUNAROUND PUMP. - OR APPROVED EQUAL.
B 2	PARKER T970LR	FORCED DRAFT LOW NOX	970	827	84	55	150	180	115	1	1,870	- PROVIDE 5AMPS, 115V-1Ø-60HZ FOR CONTROLS. - 1/3 HP RUNAROUND PUMP. - 100% REDUNDANT. - OR APPROVED EQUAL.

VARIABLE FREQUENCY DRIVE SCHEDULE

SYMBOL	MANUFACTURER MODEL NO.	SERVES	MOTOR DATA			DRIVE DATA		OPERATING WEIGHT	REMARKS
			HP	FLA	VOLT	HP	VOLT		
VFD 1	ABB ACH550-VCR-08A8-4	IDEC 1	5	7.6	460 VAC	5	480 VAC	32	- MOTOR DATA PER NEC TABLE 430.250. - DRIVE DATA PER TYPICAL INDUSTRY STANDARD. - OR APPROVED EQUAL.
VFD 2	ABB ACH550-VCR-012A-4	IDEC 2	7.5	11	460 VAC	7.5	480 VAC	32	- MOTOR DATA PER NEC TABLE 430.250. - DRIVE DATA PER TYPICAL INDUSTRY STANDARD. - OR APPROVED EQUAL
VFD 3	ABB ACH550-VCR-012A-4	IDEC 3	7.5	11	460 VAC	7.5	480 VAC	32	- MOTOR DATA PER NEC TABLE 430.250. - DRIVE DATA PER TYPICAL INDUSTRY STANDARD. - OR APPROVED EQUAL
VFD 4	ABB ACH550-VCR-012A-4	IDEC 4	7.5	11	460 VAC	7.5	480 VAC	32	- MOTOR DATA PER NEC TABLE 430.250. - DRIVE DATA PER TYPICAL INDUSTRY STANDARD. - OR APPROVED EQUAL
VFD 5	ABB ACH550-VCR-08A8-4	IDEC 5	5.0	7.6	460 VAC	5	480 VAC	32	- MOTOR DATA PER NEC TABLE 430.250. - DRIVE DATA PER TYPICAL INDUSTRY STANDARD. - OR APPROVED EQUAL
VFD 6	ABB ACH550-VCR-012A-4	IDEC 6	7.5	11	460 VAC	7.5	480 VAC	32	- MOTOR DATA PER NEC TABLE 430.250. - DRIVE DATA PER TYPICAL INDUSTRY STANDARD. - OR APPROVED EQUAL
VFD 7	ABB ACH550-VCR-03A3-4	EF 9	1.0	4.6	208 VAC	1.0	208 VAC	32	- MOTOR DATA PER NEC TABLE 430.250. - DRIVE DATA PER TYPICAL INDUSTRY STANDARD. - OR APPROVED EQUAL
VFD 8	ABB ACH550-VCR-03A3-4	EF 10	1.0	4.6	208 VAC	1.0	208 VAC	32	- MOTOR DATA PER NEC TABLE 430.250. - DRIVE DATA PER TYPICAL INDUSTRY STANDARD. - OR APPROVED EQUAL
VFD 9	ABB ACH550-VCR-04A1-4	EF 11	2.0	7.5	208 VAC	2.0	208 VAC	32	- MOTOR DATA PER NEC TABLE 430.250. - DRIVE DATA PER TYPICAL INDUSTRY STANDARD. - OR APPROVED EQUAL
VFD 10	ABB ACH550-VCR-03A3-4	EF 12	1.5	6.6	208 VAC	1.5	208 VAC	32	- MOTOR DATA PER NEC TABLE 430.250. - DRIVE DATA PER TYPICAL INDUSTRY STANDARD. - OR APPROVED EQUAL

AIR COOLED CONDENSER SCHEDULE

SYMBOL	MANUFACTURER MODEL NO.	LOCATION	NOMINAL TONS	COOLING CAPACITY AT 115°F	AMBIENT AIR TEMP. (°F)	ELECTRICAL				REFRIGERANT		OPERATING WEIGHT (LBS.)
						MCA	MOCP	VOLT	PHASE	TYPE	WEIGHT (LBS)	
ACC 1	TRANE CAUCC40	ROOF	40	37.4	115	7.7	15	460	3	R410-A	39	2,395

REMARKS
- OR APPROVED EQUAL.

REGISTERED PROFESSIONAL ENGINEER
DONN C. GILMORE
No. 11541
Exp. 9-30-11
MECHANICAL
STATE OF CALIFORNIA

DONN C. GILMORE & ASSOCIATES, INC.
Consulting Mechanical and Electrical Engineers
DCGA
4051 E. La Palma Ave., Ste. A
Anaheim, CA 92807
Ph.: 714.630.4291
Fax: 714.630.4805

DATE	SYM	REVISION	BY	A'PD

NATIONAL AERONAUTICS AND SPACE ADMINISTRATION
DRYDEN FLIGHT RESEARCH CENTER
EDWARDS, CA

DRAWING TITLE
MECHANICAL SCHEDULES

PROJECT TITLE
FACILITIES SUPPORT CENTER BUILDING
100% FINAL DESIGN SUBMITTAL

APPROVALS	DATE
Chief, Facilities Engineering & Asset Mgmt Office DAN CROWLEY	4/14/11
Project Requestor /Customer DAN CROWLEY	4/14/11
Facilities Project Manager GEMMA FLORES	4/14/11
Chief, Office of Protective Services JOHN ZELLMER	4/14/11
Chief - Safety, Health, and Environmental Office DAN MULLEN	4/14/11
DFRC Chief Information Officer KEN NORLIN	4/19/11

DATE STRTD	11/08/10	DATE PRNTD	03/14/11
DRAWN BY			EDM-1703
SCALE	AS NOTED	TRADE SH. No.	
FILE NAME		M0.2	SHEET No. 114 of 193

FAN COIL UNIT SCHEDULE

SYMBOL	MANUFACTURER MODEL NO.	LOCATION	AREA SERVED	CFM	TOTAL COOLING (MBH)	SENSIBLE COOLING (MBH)	HEATING (MBH)	ESP (INCHES)	ELECTRICAL				O.A. (CFM)	FILTER				OPERATING WEIGHT (LBS.)	REMARKS
									VOLT	PHASE	MCA	MCOP		QTY	SIZE W"xH"xD"	MERV	P.D.		
FC 1	DAIKIN FXMQ12	CONFERERENCE 128	CONFERERENCE 128	335	8.9	8.9	11.9	0.40	208	1	0.60	15	55	1	20"x12"x2"	13	.08	55	- TO PROVIDE AND INSTALL ALL REFRIGERANT PIPING PER MANUFACTURER'S RECOMMENDATION, COMMUNICATION RING, & CONDENSATE PUMP KIT. - OR APPROVED EQUAL.
FC 2	DAIKIN FXMQ12	OFFICE 124	OFFICES 124, 125, 126, 127	335	9.2	9.2	12.0	0.40	208	1	0.60	15	70	1	20"x12"x2"	13	.08	55	- TO PROVIDE AND INSTALL ALL REFRIGERANT PIPING PER MANUFACTURER'S RECOMMENDATION, COMMUNICATION RING, & CONDENSATE PUMP KIT. - OR APPROVED EQUAL.
FC 3	DAIKIN FXMQ12	OFFICE 123	COPY / OFFICES 121 / 122,123	335	9.2	9.2	12.0	0.40	208	1	0.60	15	65	1	20"x12"x2"	13	.08	55	- TO PROVIDE AND INSTALL ALL REFRIGERANT PIPING PER MANUFACTURER'S RECOMMENDATION, COMMUNICATION RING, & CONDENSATE PUMP KIT. - OR APPROVED EQUAL.
FC 4	DAIKIN FXMQ07	CONFERENCE 137	CONFERENCE 137	230	5.7	5.7	7.4	0.40	208	1	0.60	15	30	1	20"x12"x2"	13	.08	55	- TO PROVIDE AND INSTALL ALL REFRIGERANT PIPING PER MANUFACTURER'S RECOMMENDATION, COMMUNICATION RING, & CONDENSATE PUMP KIT. - OR APPROVED EQUAL.
FC 5	DAIKIN FXMQ12	OFFICE 134	OFFICES 134, 135, 136	280	8.9	8.9	12.0	0.40	208	1	0.60	15	55	1	20"x12"x2"	13	.08	55	- TO PROVIDE AND INSTALL ALL REFRIGERANT PIPING PER MANUFACTURER'S RECOMMENDATION, COMMUNICATION RING, & CONDENSATE PUMP KIT. - OR APPROVED EQUAL.
FC 6	DAIKIN FXMQ12	OFFICE 133	COPY / OFFICES 131 / 132, 133	335	8.9	8.9	12.0	0.40	208	1	0.60	15	70	1	20"x12"x2"	13	.08	55	- TO PROVIDE AND INSTALL ALL REFRIGERANT PIPING PER MANUFACTURER'S RECOMMENDATION, COMMUNICATION RING, & CONDENSATE PUMP KIT. - OR APPROVED EQUAL.
FC 7	DAIKIN FXMQ07	OFFICE 145	OFFICE 145	225	5.6	5.6	7.4	0.40	208	1	0.60	15	25	1	20"x12"x2"	13	.08	55	- TO PROVIDE AND INSTALL ALL REFRIGERANT PIPING PER MANUFACTURER'S RECOMMENDATION, COMMUNICATION RING, & CONDENSATE PUMP KIT. - OR APPROVED EQUAL.
FC 8	DAIKIN FXMQ24	OFFICE 142	COPY / OFFICE 141 / 142, 143, 144	600	17.8	17.8	23.8	0.60	208	1	1.80	15	70	2	20"x12"x2"	13	.08	79	- TO PROVIDE AND INSTALL ALL REFRIGERANT PIPING PER MANUFACTURER'S RECOMMENDATION, COMMUNICATION RING, & CONDENSATE PUMP KIT. - OR APPROVED EQUAL.
FC 9	DAIKIN FXMQ36	CONFERENCE ROOM 150	CONFERENCE ROOM 150	1,005	27.4	27.4	36.0	0.80	208	1	2.90	15	260	2	24"x20"x2"	13	.08	101	- TO PROVIDE AND INSTALL ALL REFRIGERANT PIPING PER MANUFACTURER'S RECOMMENDATION, COMMUNICATION RING, & CONDENSATE PUMP KIT. - INTERLOCK WITH EF-15. - OR APPROVED EQUAL.
FC 10	DAIKIN FXMQ36	CORRIDOR 103	CONFERENCE ROOM 101	800	27.8	27.8	36.0	0.80	208	1	2.90	15	275	2	24"x20"x2"	13	.08	101	- TO PROVIDE AND INSTALL ALL REFRIGERANT PIPING PER MANUFACTURER'S RECOMMENDATION, COMMUNICATION RING, & CONDENSATE PUMP KIT. - INTERLOCK WITH EF-14. - OR APPROVED EQUAL.
FC 11	DAIKIN FXMQ36	CORRIDOR 103	CONFERENCE ROOM 101	800	27.8	27.8	36.0	0.80	208	1	2.90	15	275	2	24"x20"x2"	13	.08	101	- TO PROVIDE AND INSTALL ALL REFRIGERANT PIPING PER MANUFACTURER'S RECOMMENDATION, COMMUNICATION RING, & CONDENSATE PUMP KIT. - INTERLOCK WITH EF-14. - OR APPROVED EQUAL.
FC 12	DAIKIN FXMQ12	CONFERENCE ROOM 168	CONFERENCE ROOM 168	240	9.6	9.6	12.0	0.40	208	1	0.60	15	85	1	20"x12"x2"	13	.08	55	- TO PROVIDE AND INSTALL ALL REFRIGERANT PIPING PER MANUFACTURER'S RECOMMENDATION, COMMUNICATION RING, & CONDENSATE PUMP KIT. - OR APPROVED EQUAL.
FC 13	DAIKIN FXMQ07	HEALTH LAB 110	HEALTH LAB 110	225	5.9	5.9	7.5	0.40	208	1	0.60	15	30	1	20"x12"x2"	13	.08	55	- TO PROVIDE AND INSTALL ALL REFRIGERANT PIPING PER MANUFACTURER'S RECOMMENDATION, COMMUNICATION RING, & CONDENSATE PUMP KIT. - OR APPROVED EQUAL.
FC 14	DAIKIN FXMQ12	OFFICE 166	OFFICE 164, 165, 166, 167	340	22.4	22.4	30.0	0.40	208	1	0.60	15	85	1	20"x12"x2"	13	.08	55	- TO PROVIDE AND INSTALL ALL REFRIGERANT PIPING PER MANUFACTURER'S RECOMMENDATION, COMMUNICATION RING, & CONDENSATE PUMP KIT. - OR APPROVED EQUAL.
FC 15	DAIKIN FXMQ30	CORRIDOR 103	BREAK ROOM 102	880	9.3	9.3	12.0	0.80	208	1	2.30	15	160	2	20"x14"x2"	13	.08	79	- TO PROVIDE AND INSTALL ALL REFRIGERANT PIPING PER MANUFACTURER'S RECOMMENDATION, COMMUNICATION RING, & CONDENSATE PUMP KIT. - OR APPROVED EQUAL.

EXHAUST FAN SCHEDULE

SYMBOL	MANUFACTURER MODEL NO.	AREA SERVED	TYPE	CFM	S.P. (IN.)	RPM	SONES	ELECTRICAL				OPERATING WEIGHT (LBS.)	REMARKS
								BHP	HP	VOLT	PHASE		
EF 1	GREENHECK GB-161-4	MENS RESTROOM / MENS SHOWER 106/107	DOWNBLAST CENTRIFUGAL BELT DRIVE	1,350	.375	739	7.1	0.19	1/3	115	1	80	- PROVIDE MANUFACTURER'S ROOF CURB WITH TRAY, BACKDAFT DAMPER AND BIRDSCREEN, PREMIUM EFFICIENCY MOTOR. - OR APPROVED EQUAL.
EF 2	GREENHECK GB-101-4	WOMENS RESTROOM / WOMENS SHOWER 108/109	DOWNBLAST CENTRIFUGAL BELT DRIVE	450	.375	991	3.4	0.08	1/4	115	1	70	- PROVIDE MANUFACTURER'S ROOF CURB WITH TRAY, BACKDAFT DAMPER AND BIRDSCREEN, PREMIUM EFFICIENCY MOTOR. - OR APPROVED EQUAL.
EF 3	GREENHECK GB-071-6	COPY 121	DOWNBLAST CENTRIFUGAL BELT DRIVE	150	.250	1,014	4.0	0.05	1/6	115	1	75	- PROVIDE MANUFACTURER'S ROOF CURB WITH TRAY, BACKDAFT DAMPER AND BIRDSCREEN. - OR APPROVED EQUAL.
EF 4	GREENHECK GB-071-6	COPY 131	DOWNBLAST CENTRIFUGAL BELT DRIVE	150	.250	1,014	4.0	0.05	1/6	115	1	75	- PROVIDE MANUFACTURER'S ROOF CURB WITH TRAY, BACKDAFT DAMPER AND BIRDSCREEN, PREMIUM EFFICIENCY MOTOR. - OR APPROVED EQUAL.
EF 5	GREENHECK GB-091-4	COPY 141	DOWNBLAST CENTRIFUGAL BELT DRIVE	225	.250	770	3.8	0.04	1/4	115	1	75	- PROVIDE MANUFACTURER'S ROOF CURB WITH TRAY, BACKDAFT DAMPER AND BIRDSCREEN. - OR APPROVED EQUAL.
EF 6	GREENHECK GB-161-3	ELECTRICAL 111	DOWNBLAST CENTRIFUGAL BELT DRIVE	1,420	.375	752	7.3	0.20	1/3	115	1	85	- PROVIDE MANUFACTURER'S ROOF CURB WITH TRAY, BACKDAFT DAMPER, BIRDSCREEN, PREMIUM EFFICIENCY MOTOR. - OR APPROVED EQUAL.
EF 7	AIRFLOW SYSTEMS BM107E14	HOT WORK SHOP 161	CENTRIFUGAL DIRECT DRIVE	700	8	-	-	-	3	460	3	150	- "AIRFLOW SYSTEMS" MODEL NO. BM10 HIGH PRESSURE BLOWER ASSEMBLY OR APPROVED EQUAL. - AMCA TYPE B SPARK RESISTANCE CONSTRUCTION. - OR APPROVED EQUAL.
EF 8	GREENHECK CUE-121-VG	LOBBY 100	UPBLAST CENTRIFUGAL DIRECT DRIVE	1,445	.250	1,445	11.4	0.20	1/2	115	1	90	- PROVIDE MANUFACTURER'S ROOF CURB WITH TRAY, BACKDAFT DAMPER, ECM MOTOR, AND BIRDSCREEN. - OR APPROVED EQUAL.
EF 9	GREENHECK CUE-200-C	OFFICE SUITE 130	UPBLAST CENTRIFUGAL DIRECT DRIVE	3,940	.500	860	13.5	.75	1	208	3	155	- PROVIDE MANUFACTURER'S ROOF CURB WITH TRAY, BACKDAFT DAMPER AND BIRDSCREEN, MOTOR VFD RATED. - OR APPROVED EQUAL.
EF 10	GREENHECK CUE-200-C	OFFICE SUITE 140	UPBLAST CENTRIFUGAL DIRECT DRIVE	3,965	.500	860	13.7	.75	1	208	3	155	- PROVIDE MANUFACTURER'S ROOF CURB WITH TRAY, BACKDAFT DAMPER, BIRDSCREEN, MOTOR VFD RATED. - OR APPROVED EQUAL.
EF 11	GREENHECK CUE-200-B	OFFICE SUITE 120	UPBLAST CENTRIFUGAL DIRECT DRIVE	5,100	.500	1,140	22	1.74	2	208	3	165	- PROVIDE MANUFACTURER'S ROOF CURB WITH TRAY, BACKDAFT DAMPER, BIRDSCREEN, PREMIUM EFFICIENCY MOTOR, MOTOR VFD RATED. - OR APPROVED EQUAL.
EF 12	GREENHECK CUBE-240-15	MEZZANINE 200	UPBLAST CENTRIFUGAL BELT DRIVE	6,575	.250	781	17.2	1.29	1 1/2	208	3	185	- PROVIDE MANUFACTURER'S ROOF CURB WITH TRAY, BACKDAFT DAMPER, BIRDSCREEN, PREMIUM EFFICIENCY MOTOR, MOTOR VFD RATED. - OR APPROVED EQUAL.
EF 13	GREENHECK CUE-121-VG	CHILLER ROOM 205	UPBLAST CENTRIFUGAL DIRECT DRIVE	660	.250	787	5.2	0.05	1/2	115	1	70	- PROVIDE MANUFACTURER'S ROOF CURB WITH TRAY, BACKDAFT DAMPER, ECM MOTOR, AND BIRDSCREEN. - OR APPROVED EQUAL.

NOTE:
INTERLOCK EF-9, EF-10, EF-11, AND EF-12 TO VFD.

AIR SEPARATOR SCHEDULE

SYMBOL	MANUFACTURER MODEL	SERVICE	GPM	DIMENSION			H_20 PD FT.	OPERATING WEIGHT (LBS.)	REMARKS
				PIPE SIZE	DIA. (IN.)	HEIGHT (IN.)			
AS 1	BELL & GOSSETT ROLAIRTOL RL-3N	CHILLED WATER SYSTEM	96	2	9	16	0.3	105	- LESS STRAINER. - OR APPROVED EQUAL.
AS 2	BELL & GOSSETT ROLAIRTROL RL-2.5N	HEATING HOT WATER SYSTEM	55	2	9	16	0.3	105	- LESS STRAINER. - OR APPROVED EQUAL.

SPLIT SYSTEM COOLING UNIT SCHEDULE

SYMBOL	MANUFACTURER MODEL NO.	SEER	COOLING CAPACITY		ELECTRICAL			R-410A REFRIGERANT PIPE SIZE (OD)		OPERATING WEIGHT (LBS.)	REMARKS
			TOTAL	SENSIBLE	MCA	MCOP	VOLT	SUCTION	LIQUID		
CU 1	DIAKIN RXS24DVJU	15	24,000	18,000	15.8	20	208/1	5/8"	1/4"	121	- OR APPROVED EQUAL
CU 2	DIAKIN RXS24DVJU	15	24,000	18,000	15.8	20	208/1	5/8"	1/4"	121	- OR APPROVED EQUAL

SYMBOL	MANUFACTURER MODEL NO.	AREA SERVED	CFM	ELECTRICAL		OPERATING WEIGHT (LBS.)	REMARKS
				RUNNING AMPS	VOLT/PH/Hz		
F 1	DAIKIN FTX24DVJU	COMM. ROOM 112	800	0.20 A	208 / 1 / 60	26.5	- OR APPROVED EQUAL
F 2	DAIKIN FTX24DVJU	COMM. ROOM 131A	800	0.20 A	208 / 1 / 60	26.5	- OR APPROVED EQUAL

EXPANSION TANK SCHEDULE

SYMBOL	MANUFACTURER MODEL	LOCATION	SERVICE	DIMENSION				OPERATING WEIGHT (LBS.)	REMARKS
				GALLON	DIA. (IN.)	ACCEPTANCE GALLON	LENGTH (IN.)		
ET 1	WESSEL NLAP-100	CHILLER ROOOM 205	CHILLED WATER SYSTEM	25	16	25	32.1	80	- FULL ACCEPTANCE BLADDER TANK. - OR APPROVED EQUAL.
ET 2	WESSEL NLAP-100	BOILER ROOM 201	HEATING HOT WATER SYSTEM	25	16	25	32.1	80	- FULL ACCEPTANCE BLADDER TANK. - OR APPROVED EQUAL.

AIR COOLED CONDENSING UNIT SCHEDULE

SYMBOL	MANUFACTURER MODEL NO.	LOCATION	EER	NOM. TONS	COOLING CAPACITY AT 115°F	HEATING CAPACITY AT 22°F	AMBIENT AIR TEMP. (°F)	ELECTRICAL				REFRIGERANT		OPERATING WEIGHT (LBS.)	REMARKS
								MCA	MOCP	VOLT	PHASE	TYPE	WEIGHT (LBS)		
ACCU 1	DAIKIN REYQ240PTJUR	ROOF	9.8	20	230,000	274,000	115	82.6	120	460	3	410-A	1,120	1,150	- HEAT RECOVERY HEAT PUMP. - OR APPROVED EQUAL.

ENERGY RECOVERY UNIT SCHEDULE

SYMBOL	MANUFACTURER MODEL	ROOM CONDITION			OUTDOOR CONDITION			SUPPLY AIR		ELECTRICAL			OPERATING WEIGHT (LBS.)	REMARKS
		CFM	TEMP, DB		CFM	TEMP, DB		TEMP, DB		WATTS	VOLT	PHASE		
			WINTER	SUMMER		WINTER	SUMMER	WINTER	SUMMER					
ERU 1	LOSSNAY LGH-F300RX3-E	260	72°F	75°F	260	22°F	106°F	57.2°F	84.2°F	278	208	1	75	- OR APPROVED EQUAL.
ERU 2	LOSSNAY LGH-F600RX3-E	550	72°F	75°F	550	22°F	106°F	57.1°F	84.2°F	654	208	1	160	- OR APPROVED EQUAL.

PUMP SCHEDULE

SYMBOL	MANUFACTURER MODEL NO.	TYPE	SERVICE	LOCATION	GPM	HEAD IN FT.	EFF. (%)	ELECTRICAL			RPM	ISOLATION TYPE	OPERATING WEIGHT (LBS.)	REMARKS
								HP	VOLT	PHASE				
CHWP 1	BELL & GOSSETT SERIES 80 2 1/2 x 2 1/2 x 7	IN-LINE	CHILLED WATER SYSTEM	CHILLER ROOM 205	96	40	66.41	2	208	3	1,750	NONE	210	- OR APPROVED EQUAL.
HHWP 1	BELL & GOSSETT SERIES 80 2 1/2 x 2 1/2 x 7	IN-LINE	HEATING HOT WATER SYSTEM	BOILER ROOM 201	55	35	54.77	1 1/2	208	3	1,750	NONE	210	- OR APPROVED EQUAL.
HHWP 2	BELL & GOSSETT SERIES 80 2 1/2 x 2 1/2 x 7	IN-LINE	HEATING HOT WATER SYSTEM	BOILER ROOM 201	55	35	54.77	1 1/2	208	3	1,750	NONE	210	- OR APPROVED EQUAL.

REGISTERED PROFESSIONAL ENGINEER
DONN C. GILMORE
No. 11541
Exp. 9-30-11
MECHANICAL
STATE OF CALIFORNIA

DONN C. GILMORE & ASSOCIATES, INC.
Consulting Mechanical and Electrical Engineers
DCGA
4051 E. La Palma Ave., Ste. A
Anaheim, CA 92807
Ph.: 714.630.4291
Fax: 714.630.4805

DATE	SYM	REVISION	BY	A'PD

NATIONAL AERONAUTICS AND SPACE ADMINISTRATION
DRYDEN FLIGHT RESEARCH CENTER
EDWARDS, CA

DRAWING TITLE
MECHANICAL SCHEDULES

PROJECT TITLE
FACILITIES SUPPORT CENTER BUILDING
100% FINAL DESIGN SUBMITTAL

APPROVALS	DATE
Chief, Facilities Engineering & Asset Mgmt. Office DAN CROWLEY	4/14/11
Project Requestor /Customer DAN CROWLEY	4/14/11
Facilities Project Manager GEMMA FLORES	4/14/11
Chief, Office of Protective Services JOHN ZELLMER	4/14/11
Chief - Safety, Health, and Environmental Office DAN MULLEN	4/14/11
DFRC Chief Information Officer KEN NORLIN	4/14/11

DATE STRTD	11/08/10	DATE PRNTD	03/14/11
DRAWN BY		EDM-1703	
SCALE	AS NOTED	TRADE SH. No.	
FILE NAME		M0.3	SHEET No. 115 of 193

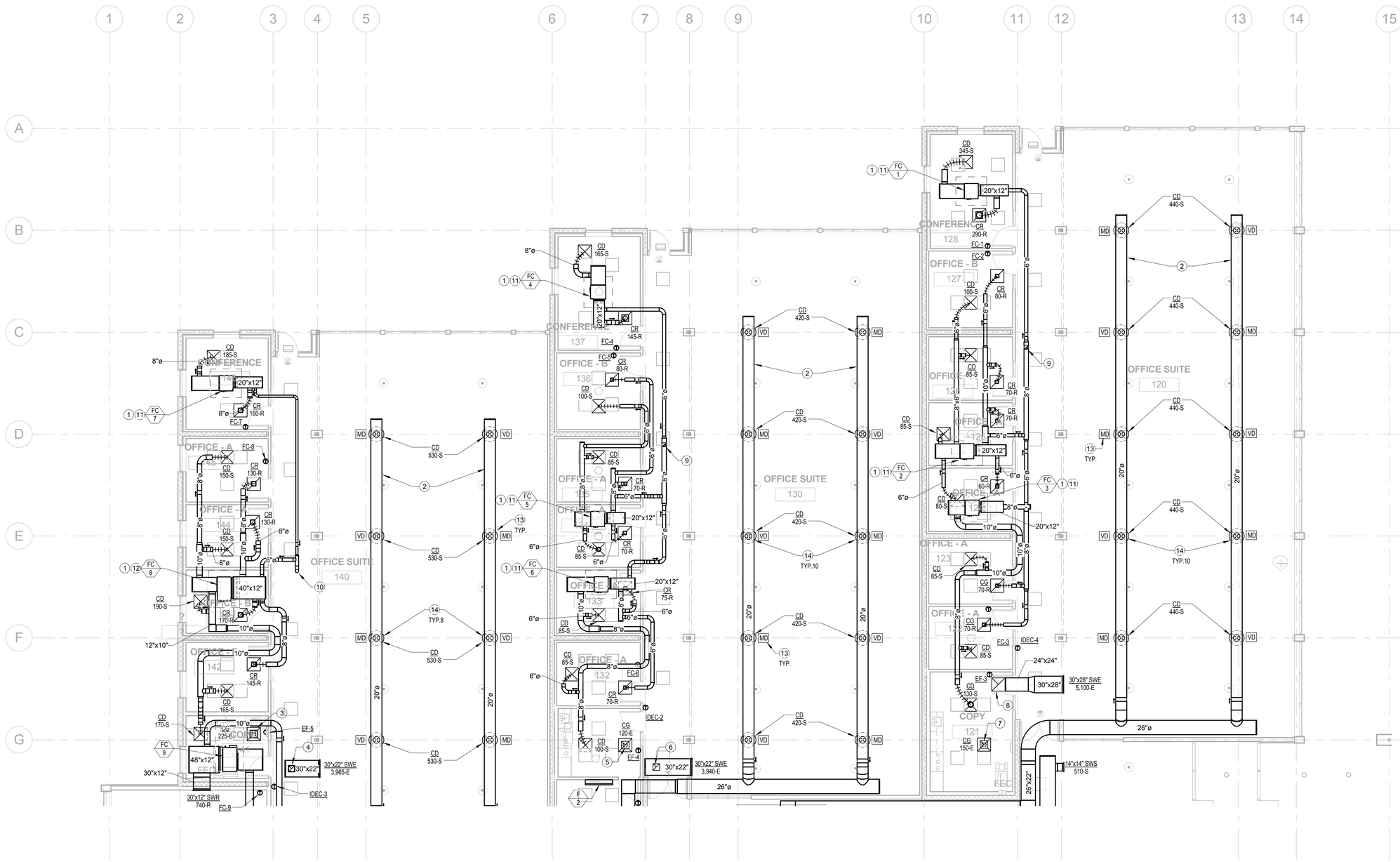

KEY NOTES

1. FAN COIL IN CEILING SPACE.
2. EXPOSED SA DUCTWORK.
3. 8"ø (L) EA UP. TRANSITION TO 14"x14" (L) UP THRU ROOF TO OPENING OF TO EF-5.
4. 12"x12" EA DUCT UP THRU ROOF TO EF-10.
5. 8"ø (L) EA UP. TRANSITION TO 14"x14" (L) UP THRU ROOF TO OPENING OF TO EF-4.
6. 12"x12" EA DUCT UP THRU ROOF TO EF-9.
7. 8"ø EA UP. TRANSITION TO 14"x14" UP THRU ROOF TO OPENING OF TO EF-3.
8. 24"x24" (L) EA DUCT UP THRU ROOF TO EF-11.
9. 8"ø OA DUCT UP THRU ROOF, COMPLETE WITH BIRDSCREEN MESH. MAINTAIN MIN. 10'-0" CLEARANCE FROM ANY VENT AND EA DUCT.
10. 10"ø OA DUCT UP THRU ROOF, COMPLETE WITH BIRDSCREEN MESH. MAINTAIN MIN. 10'-0" CLEARANCE FROM ANY VENT AND EA DUCT.
11. (1) 20"x12"x2" FILTER IN 20"x12" RETURN AIR PLENUM.
12. (2) 20"x12"x2" FILTER IN 40"x12" RETURN AIR PLENUM.
13. 24V MOTORIZED VOLUME DAMPER, MD.
14. SA DIFFUSER WITH INTEGRAL 24V ACTUATOR TO CHANGE THROW PATTERN.

GENERAL NOTES

1. ALL EXPOSED DUCTWORK SHALL BE PAINTED. COLOR TO BE SELECTED BY ARCHITECT.
2. FOR SIZE OF SUPPLY DIFFUSER, SEE AIR DISTRIBUTION SCHEDULE ON SHEET M0.1.

SCALE: 1/8" = 1'-0"

0 8 16 24 32

MECHANICAL PLAN - NORTH SEGMENT

SCALE: 1/8" = 1'-0"

REGISTERED PROFESSIONAL ENGINEER DONN C. GILMORE No. 11541 Exp. 9-30-11 MECHANICAL STATE OF CALIFORNIA

DONN C. GILMORE & ASSOCIATES, INC.
Consulting Mechanical and Electrical Engineers

DCGA

4051 E. La Palma Ave., Ste. A
Anaheim, CA 92807
Ph.: 714.630.4291
Fax: 714.630.4805

DATE	SYM	REVISION	BY	A'PD

NATIONAL AERONAUTICS AND SPACE ADMINISTRATION

DRYDEN FLIGHT RESEARCH CENTER
EDWARDS, CA

DRAWING TITLE

MECHANICAL PLAN - NORTH SEGMENT

PROJECT TITLE

FACILITIES SUPPORT CENTER BUILDING
100% FINAL DESIGN SUBMITTAL

APPROVALS		DATE
Chief, Facilities Engineering & Asset Mgmt. Office DAN CROWLEY		4/14/11
Project Requestor /Customer DAN CROWLEY		4/14/11
Facilities Project Manager GEMMA FLORES		4/14/11
Chief, Office of Protective Services JOHN ZELLMER		4/14/11
Chief - Safety, Health, and Environmental Office DAN MULLEN		4/14/11
DFRC Chief Information Officer KEN NORLIN		4/14/11

DATE STRTD	11/08/10	DATE PRNTD	03/14/11
DRAWN BY		EDM-1703	
SCALE	AS NOTED	TRADE SH. No.	M2.1
FILE NAME		SHEET No. 116 of 193	

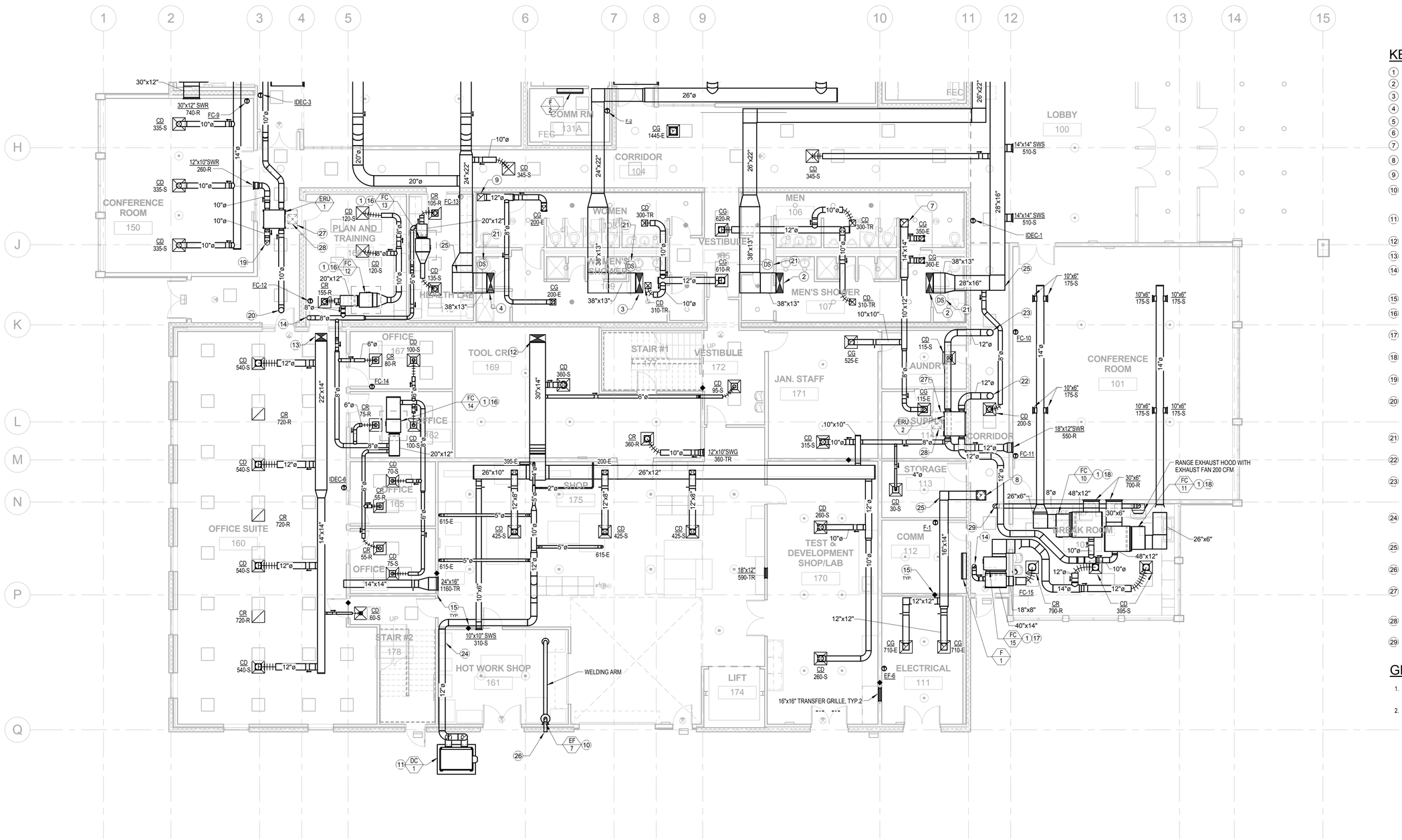

KEY NOTES

1. FAN COIL IN CEILING SPACE.
2. 38"x13" SA DUCT UP THRU ROOF TO IDEC-1.
3. 38"x13" SA DUCT UP THRU ROOF TO IDEC-4.
4. 38"x13" SA DUCT UP THRU ROOF TO IDEC-2.
5. 38"x13" SA DUCT UP THRU ROOF TO IDEC-3.
6. 14"x14" EA DUCT UP THRU ROOF TO EF-1.
7. 16"x14" EA DUCT UP THRU ROOF TO EF-6.
8. 14"x14" EA DUCT UP THRU ROOF TO EF-2.
9. WELDING EXHAUST FAN MOUNTED TO WALL. DISCHARGE HIGH BELOW SECOND FLOOR LEVEL.
10. DUST COLLECTOR MOUNTED TON CONCRETE PAD.
11. 30"x14" SA DUCT UP.
12. 22"x14" SA DUCT UP .
13. 8"ø OA DUCT UP THRU ROOF, COMPLETE WITH BIRDSCREEN MESH. MAINTAIN MIN. 10'-0" CLEARANCE FROM ANY VENT AND EA DUCT.
14. COMBINATION SMOKE/FIRE DAMPER, CSFD.
15. (1) 20"x12"x2" FILTER IN 20"x12" RETURN AIR PLENUM.
16. (2) 20"x14"x2" FILTER IN 40"x14" RETURN AIR PLENUM.
17. (2) 24"x12"x2" FILTER IN 48"x12" RETURN AIR PLENUM.
18. 10"ø EA DUCT UP THRU ROOF TO GOOSENECK, COMPLETE WITH BIRDSCREEN MESH.
19. 10"ø OA DUCT UP THRU ROOF TO GOOSENECK, COMPLETE WITH BIRDSCREEN MESH. MAINTAIN MIN. 10'-0" CLEARANCE FROM ANY EA DUCT AND VENT DISCHARGE.
20. DUCT SMOKE DETECTOR, DS, PER 2010 CMC 609.
21. 12"ø EA DUCT UP THRU ROOF, COMPLETE WITH BIRDSCREEN MESH.
22. 12"ø OA DUCT UP THRU ROOF, COMPLETE WITH BIRDSCREEN MESH. MAINTAIN MIN. 10'-0" CLEARANCE FROM ANY EA DUCT AND VENT DISCHARGE.
23. 12"ø EA DUCT IN RATED ENCLOSURE. SEE ARCHITECTURAL DRAWINGS FOR MORE INFORMATION.
24. RECTANGULAR ELBOW WITH TURNING VANES, TYP.
25. 6"ø EA DUCT TO DISCHARGE THRU WALL TO WALL CAP.
26. INDICATES MIN. MAINTENANCE SPACE CLEARANCE FOR ACCESS TO HEAT EXCHANGER, AIR FILTERS, AND FANS.
27. INDICATES MIN. INSPECTION OPENING. PROVIDE ACCESS PANEL AS REQUIRED.
28. 8" UP THROUGH ROOF TO GOOSENECK.
29.

GENERAL NOTES

1. ALL EXPOSED DUCTWORK SHALL BE PAINTED. COLOR TO BE SELECTED BY ARCHITECT.
2. FOR SIZE OF SUPPLY DIFFUSER, SEE AIR DISTRIBUTION SCHEDULE ON SHEET M0.1.

SCALE: 1/8" = 1'-0"

0 8 16 24 32

MECHANICAL PLAN - SOUTH SEGMENT

SCALE: 1/8" = 1'-0"

REGISTERED PROFESSIONAL ENGINEER DONN C. GILMORE No. 11541 Exp. 9-30-11 MECHANICAL STATE OF CALIFORNIA

DONN C. GILMORE & ASSOCIATES, INC.
Consulting Mechanical and Electrical Engineers
DCGA
4051 E. La Palma Ave., Ste. A
Anaheim, CA. 92807
Ph.: 714.630.4291
Fax: 714.630.4805

DATE	SYM	REVISION	BY	A'PD

NATIONAL AERONAUTICS AND SPACE ADMINISTRATION

DRYDEN FLIGHT RESEARCH CENTER
EDWARDS, CA

DRAWING TITLE

MECHANICAL PLAN - SOUTH SEGMENT

PROJECT TITLE

FACILITIES SUPPORT CENTER BUILDING
100% FINAL DESIGN SUBMITTAL

APPROVALS		DATE
Chief, Facilities Engineering & Asset Mgmt. Office DAN CROWLEY		4/14/11
Project Requestor /Customer DAN CROWLEY		4/14/11
Facilities Project Manager GEMMA FLORES		4/14/11
Chief, Office of Protective Services JOHN ZELLMER		4/14/11
Chief - Safety, Health, and Environmental Office DAN MULLEN		4/14/11
DFRC Chief Information Officer KEN NORLIN		4/19/11

DATE STRTD	11/08/10	DATE PRNTD	03/14/11
DRAWN BY		EDM-1703	
SCALE	AS NOTED	TRADE SH. No.	M2.2
FILE NAME		SHEET No. 117 of 193	

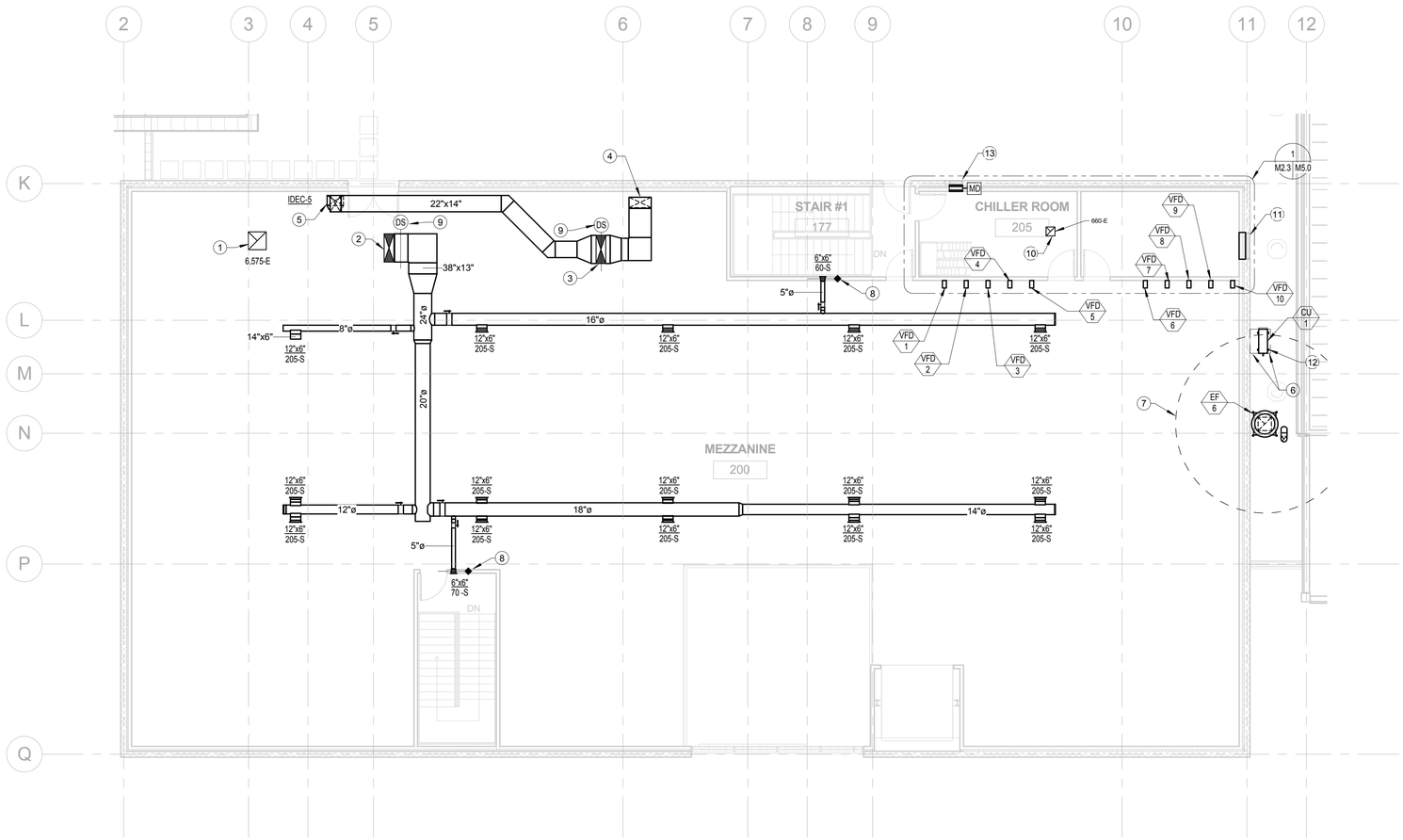

KEY NOTES

1. 24"x24" EA DUCT UP THRU ROOF TO EF-12.
2. 38"x13" SA DUCT UP THRU ROOF TO IDEC-5.
3. 38"x13" SA DUCT UP THRU ROOF TO IDEC-6.
4. 30"x14" SA DN TO BELOW.
5. 22"x14" SA DN TO BELOW.
6. INDICATES MINIMUM SERVICE CLEARANCE.
7. INDICATES MINIMUM DISTANCE FROM ANY OUTSIDE AIR INTAKE.
8. COMBINATION SMOKE/FIRE DAMPER, CSFD.
9. DUCT SMOKE DETECTOR, DS, PER 2010 CMC 609.
10. 12"x12" EA DUCT, COMPLETE WITH 1/2" SCREENMESH, UP THRU ROOF TO EF-13.
11. 3'-0"x3'-0" OUTSIDE AIR LOUVER. TOP OF LOUVER SHALL BE WITHIN 12" OF ROOF.
12. FOR CONDENSING UNIT SUPPORT AND ANCHORING TO STEEL SUPPORT, SEE STRUCTURAL DETAIL 11/S7.3.
13. 1'-6"x2'-0" OUTSIDE AIR LOUVER. TOP OF LOUVER SHALL BE WITHIN 12" OF ROOF, COMPLETE WITH MOTORIZED DAMPER.

GENERAL NOTES

1. ALL EXPOSED DUCTWORK SHALL BE PAINTED. COLOR TO BE SELECTED BY ARCHITECT.
2. FOR SIZE OF SUPPLY DIFFUSER, SEE AIR DISTRIBUTION SCHEDULE ON SHEET M0.1.

SCALE: 1/8" = 1'-0"

0 8 16 24 32

MECHANICAL MEZZANINE

SCALE: 1/8" = 1'-0"

REGISTERED PROFESSIONAL ENGINEER
DONN C. GILMORE
No. 11541
Exp. 9-30-11
MECHANICAL
STATE OF CALIFORNIA

DONN C. GILMORE & ASSOCIATES, INC.
Consulting Mechanical and Electrical Engineers
DCGA
4051 E. La Palma Ave., Ste. A
Anaheim, CA 92807
Ph.: 714.630.4291
Fax: 714.630.4805

DATE	SYM	REVISION	BY	A'PD

NATIONAL AERONAUTICS AND SPACE ADMINISTRATION

DRYDEN FLIGHT RESEARCH CENTER
EDWARDS, CA

DRAWING TITLE

MECHANICAL MEZZANINE

PROJECT TITLE

FACILITIES SUPPORT CENTER BUILDING
100% FINAL DESIGN SUBMITTAL

APPROVALS	DATE
Chief, Facilities Engineering & Asset Mgmt. Office DAN CROWLEY	4/14/11
Project Requestor /Customer DAN CROWLEY	4/14/11
Facilities Project Manager GEMMA FLORES	4/14/11
Chief, Office of Protective Services JOHN ZELLMER	4/14/11
Chief - Safety, Health, and Environmental Office DAN MULLEN	4/14/11
DFRC Chief Information Officer KEN NORLIN	4/14/11

DATE STRTD	11/08/10	DATE PRNTD	03/14/11
DRAWN BY		EDM-1703	
SCALE	AS NOTED	TRADE SH. No.	
FILE NAME		M2.3	SHEET No. 118 of 193

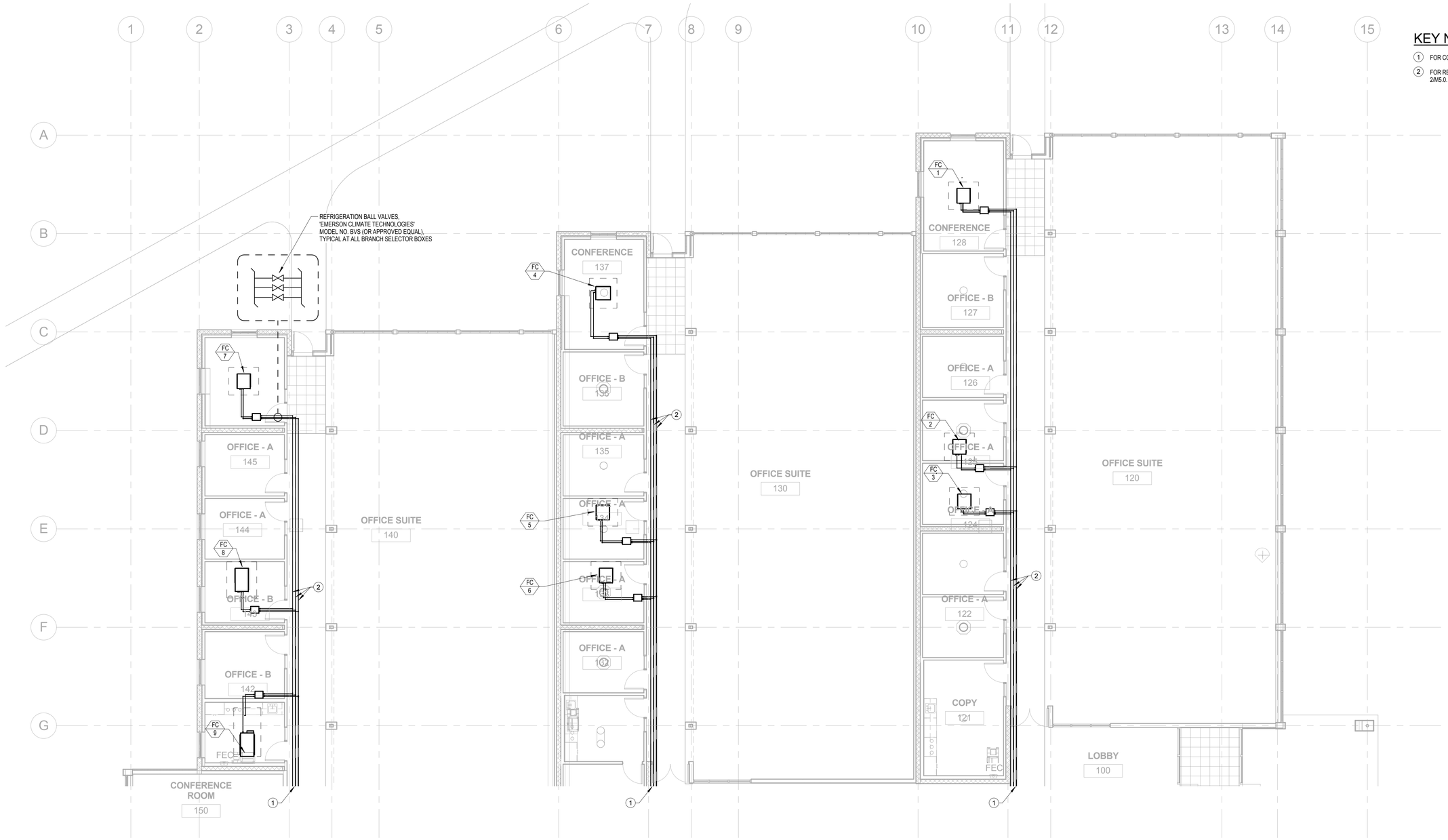

KEY NOTES

1. FOR CONTINUATION, SEE SHEET M3.2.
2. FOR REFRIGERANT PIPE SIZES SHEE DETAIL 2/M5.0.

FOR FAN COIL REFRIGERANT PIPE SIZES REFER TO SHEET M8.0.

SCALE: 1/8" = 1'-0"

0 8 16 24 32

MECHANICAL PIPING PLAN - NORTH SEGMENT

SCALE: 1/8" = 1'-0"

REGISTERED PROFESSIONAL ENGINEER DONN C. GILMORE No. 11541 Exp. 9-30-11 MECHANICAL STATE OF CALIFORNIA

DONN C. GILMORE & ASSOCIATES, INC.
Consulting Mechanical and Electrical Engineers
DCGA
4051 E. La Palma Ave., Ste. A
Anaheim, CA 92807
Ph.: 714.630.4291
Fax: 714.630.4805

DATE	SYM	REVISION	BY	A'PD

NATIONAL AERONAUTICS AND SPACE ADMINISTRATION

DRYDEN FLIGHT RESEARCH CENTER
EDWARDS, CA

DRAWING TITLE

MECHANICAL PIPING PLAN - NORTH SEGMENT

PROJECT TITLE

FACILITIES SUPPORT CENTER BUILDING
100% FINAL DESIGN SUBMITTAL

APPROVALS		DATE
Chief, Facilities Engineering & Asset Mgmt. Office DAN CROWLEY		4/14/11
Project Requestor /Customer DAN CROWLEY		4/14/11
Facilities Project Manager GEMMA FLORES		4/14/11
Chief, Office of Protective Services JOHN ZELLMER		4/14/11
Chief - Safety, Health, and Environmental Office DAN MULLEN		4/14/11
DFRC Chief Information Officer KEN NORLIN		4/14/11

DATE STRTD	11/08/10	DATE PRNTD	03/14/11
DRAWN BY			EDM-1703
SCALE	AS NOTED	TRADE SH. No.	
FILE NAME		M3.1	SHEET No. 119 of 193

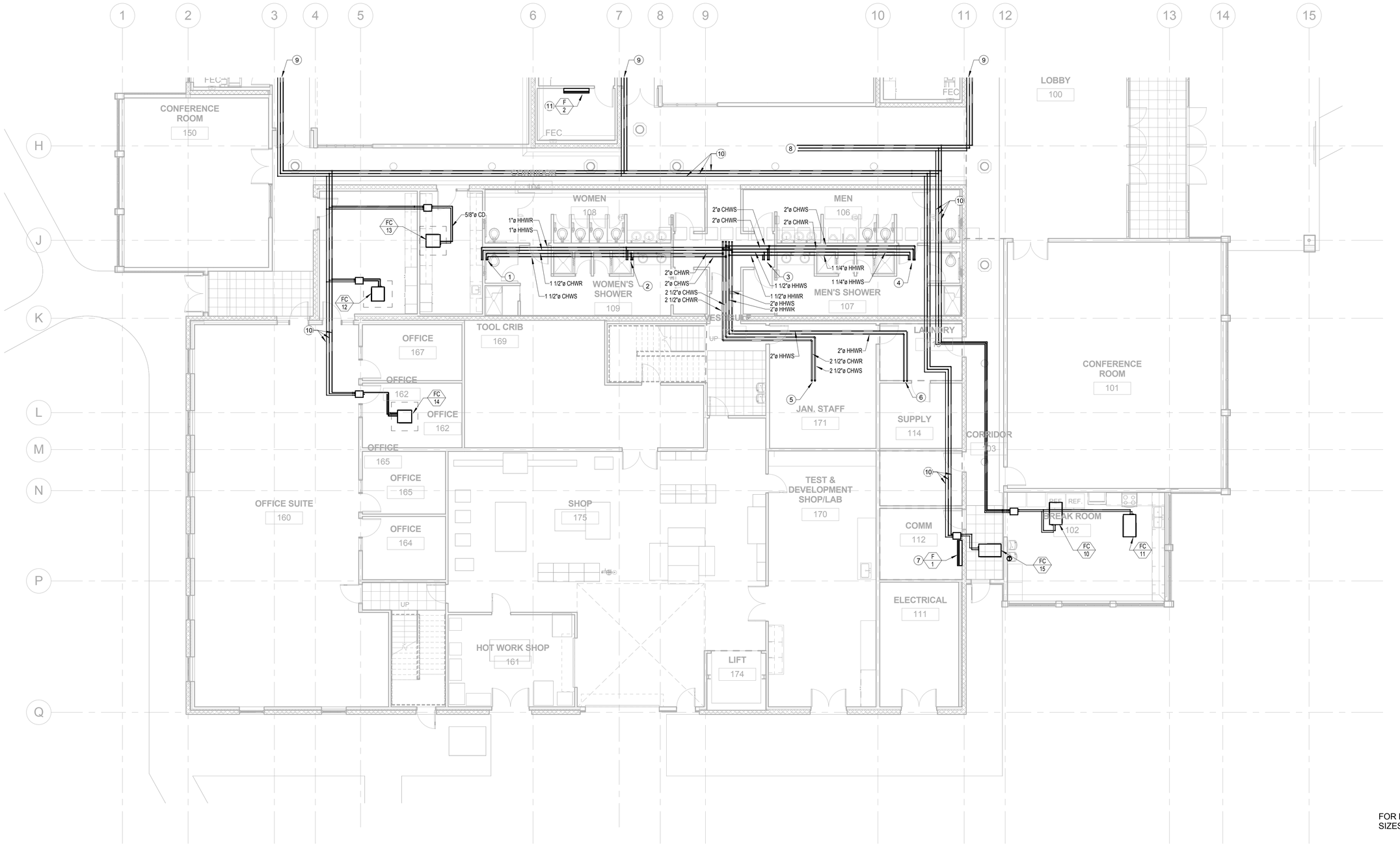

KEY NOTES

1. 1 1/2"CWHS & CHWR AND 1"HHWS & HHWR UP THRU ROOF TO IDEC-3.
2. 1 1/2"CWHS & CHWR AND 1"HHWS & HHWR UP THRU ROOF TO IDEC-2.
3. 1 1/2"CHWS & CHWR AND 1 1/4"HHWS & HHWR UP THRU ROOF TO IDEC-4.
4. 1 1/4"CHWS & CHWR AND 1 1/4"HHWS & HHWR UP THRU ROOF TO IDEC-1.
5. 2 1/2"CHWS & CHWR UP TO CHILLER ROOM.
6. 2"HHWS & HHWR UP TO BOILER ROOM.
7. ROUTE REFRIGERANT LINES UP THRU ROOF TO CU-1.
8. REFRIGERANT LINES UP THRU ROOF TO ACCU-1.
9. FOR CONTINUATION, SEE SHEET M3.1.
10. FOR REFRIGERANT PIPE SIZES SEE DETAIL 2/M5.0.
11. ROUTE REFRIGERANT LINES UP THRU ROOF TO CU-2.

FOR FAN COIL REFRIGERANT PIPE SIZES REFER TO SHEET M8.0.

SCALE: 1/8" = 1'-0"

0 8 16 24 32

MECHANICAL PIPING PLAN - SOUTH SEGMENT

SCALE: 1/8" = 1'-0"

REGISTERED PROFESSIONAL ENGINEER DONN C. GILMORE No. 11541 Exp. 9-30-11 MECHANICAL STATE OF CALIFORNIA

DONN C. GILMORE & ASSOCIATES, INC.
Consulting Mechanical and Electrical Engineers
DCGA
4051 E. La Palma Ave., Ste. A
Anaheim, CA 92807
Ph.: 714.630.4291
Fax: 714.630.4805

DATE	SYM	REVISION	BY	A'PD

NATIONAL AERONAUTICS AND SPACE ADMINISTRATION

DRYDEN FLIGHT RESEARCH CENTER
EDWARDS, CA

DRAWING TITLE

MECHANICAL PIPING PLAN - SOUTH SEGMENT

PROJECT TITLE

FACILITIES SUPPORT CENTER BUILDING
100% FINAL DESIGN SUBMITTAL

APPROVALS	DATE
Chief, Facilities Engineering & Asset Mgmt. Office DAN CROWLEY	4/14/11
Project Requestor /Customer DAN CROWLEY	4/14/11
Facilities Project Manager GEMMA FLORES	4/14/11
Chief, Office of Protective Services JOHN ZELLMER	4/14/11
Chief - Safety, Health, and Environmental Office DAN MULLEN	4/14/11
DFRC Chief Information Officer KEN NORLIN	4/19/11

DATE STRTD	11/08/10	DATE PRNTD	03/14/11
DRAWN BY			EDM-1703
SCALE	AS NOTED	TRADE SH. No.	M3.2
FILE NAME		SHEET No. 120 of 193	