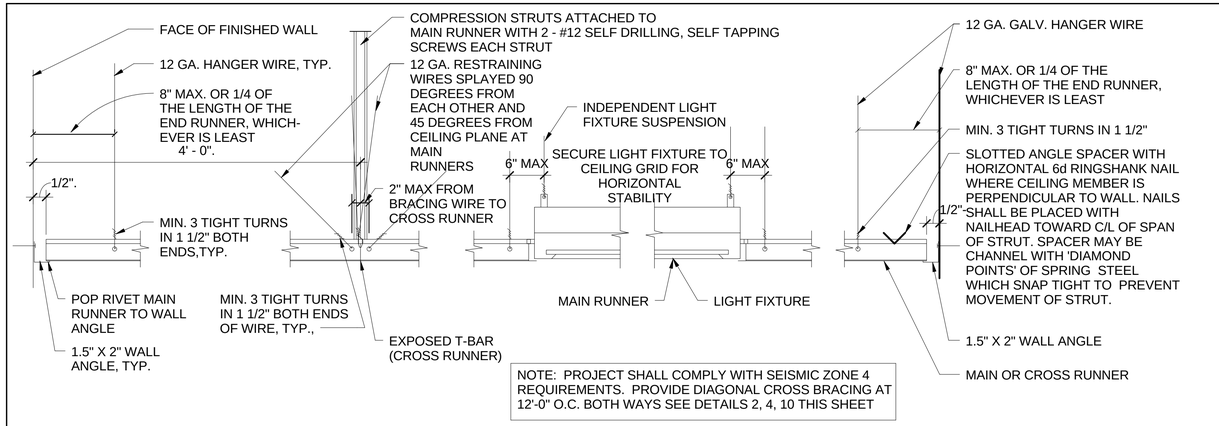

NOTE: PROJECT SHALL COMPLY WITH SEISMIC ZONE 4 REQUIREMENTS. PROVIDE DIAGONAL CROSS BRACING AT 12'-0" O.C. BOTH WAYS SEE DETAILS 2, 4, 10 THIS SHEET

TYPICAL SUSPENDED CEILING DETAIL

SCALE: 1" = 1'-0" | 7 | A3.1 A3.2 | A11.2

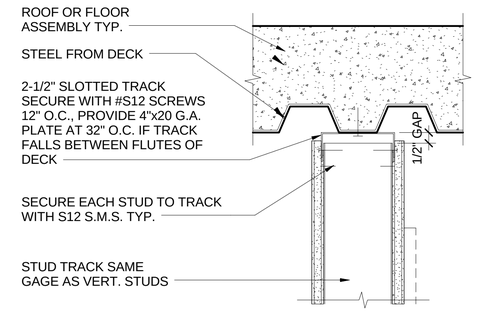

SLIP CONNECTION

SCALE: 3" = 1'-0" | 4 | A6.8 | A11.2

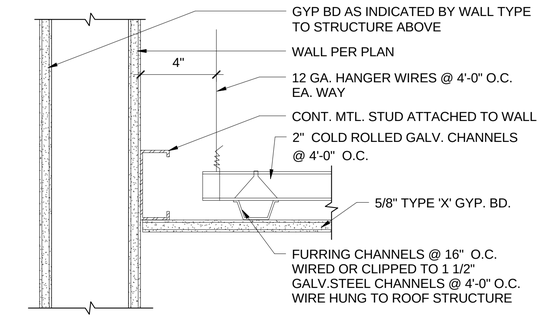

SUSPENDED GYP. BD. CEILING

SCALE: 3" = 1'-0" | 1 | A3.1 A3.2 | A11.2

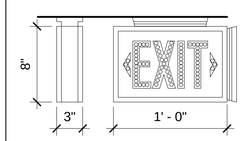

NOTES:

1. UNIT NOT AVAILABLE WITH WET LABEL
2. UNIT IS AVAILABLE WITH DAMP LABEL

LUMINAIRE REQUIREMENTS:

1. ALUMINUM, STEEL, THERMOPLASTIC OR POLYCARBONATE HOUSING.
2. BRUSHED ALUMINUM, THERMOPLASTIC OR STEEL STENCIL WITH LETTERS 6 INCHES TALL AND 3/4" WIDE STROKES AND PUNCH-OUT FACE, FOR LED'S OR INTERNAL LED ILLUMINATION.
3. RED ILLUMINATION PROVIDED BY LIGHT EMITTING DIODES (LED). APPROXIMATELY 60 LED'S PER FACE.
4. CLEAR PROTECTIVE NON-BREAKABLE LENS TO PROTECT LED'S.
5. PROVIDE POWER FAILURE, BROWN-OUT PROTECTION AND SURGE PROTECTION.
6. PROVIDE NI-CAD BATTERY POWER AND SOLID STATE TYPE CHARGER.
7. PROVIDE UNIVERSAL ARROWS AND BLANK OFF PLATES.
8. PROVIDE SINGLE OR DOUBLE FACE. AS INDICATED
9. PROVIDE UNIVERSAL MOUNTING.
10. UNITS MOUNTED EXPOSED TO THE ELEMENTS OR IN CLASSIFIED AREAS SHALL HAVE A UL LABEL AS INDICATED
11. PROVIDE INTERNAL GREEN GROUNDING SCREW.
12. PROVIDE TEST BUTTON IN BOTTOM OF HOUSING.
13. PROVIDE INDICATOR LIGHTS IN FACE TO INDICATE WHEN UNIT IS ON NORMAL POWER OR BATTERY POWER.
14. HOUSING SHALL HAVE A WHITE FINISH, EXCEPT AS INDICATED OTHERWISE.

EXIT SIGN

SCALE: 1 1/2" = 1'-0" | 8 | A3.2 | A11.2

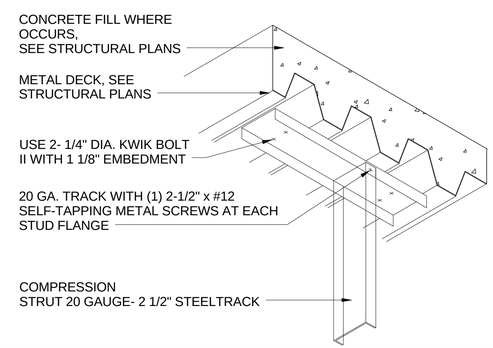

COMP. STRUT @ DECK

SCALE: 6" = 1'-0" | 5 | A11.2 | A11.2

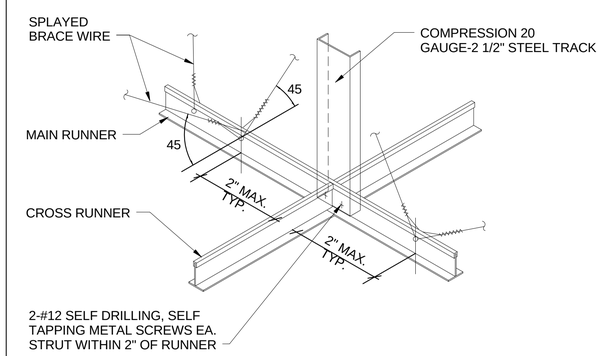

COMPRESSION STRUT TO T-BAR

SCALE: 6" = 1'-0" | 2 | A11.2 | A11.2

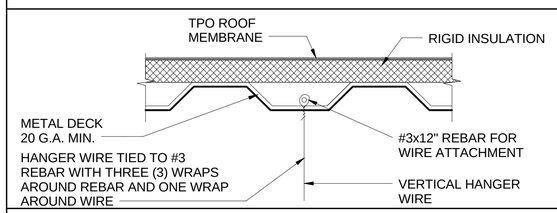

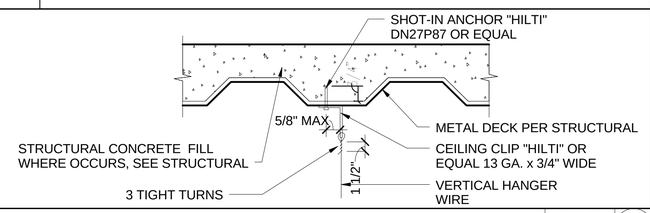

SPLAY WIRE CONNECTION

SCALE: 1" = 1'-0" | 10 | A11.2 | A11.2

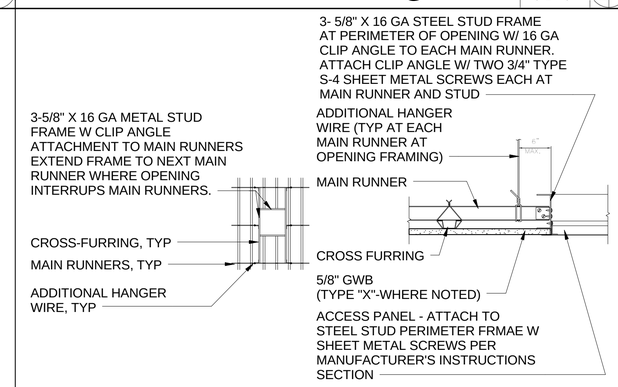

ACCESS PANEL CEILING DETAIL

SCALE: 1 1/2" = 1'-0" | 6 | A8.0 | A11.2

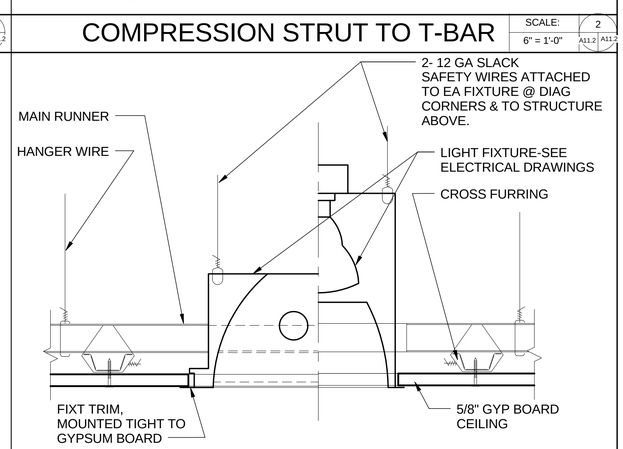

GYP BD CLG-TYP RECESS LIGHT FIXT

SCALE: 12" = 1'-0" | 3 | A8.0 | A11.2

DEVELOPMENT ONE, INC.
1611 East Fourth Street, Suite 250
Santa Ana, California 92701
J. Bruce Camino, Architect, AIA, NCARB
(714) 689-0298
(714) 648-0197 FAX

DATE	SYM	REVISION	BY	A'PD

NATIONAL AERONAUTICS AND SPACE ADMINISTRATION

DRYDEN FLIGHT RESEARCH CENTER
EDWARDS, CA

DRAWING TITLE

CEILING DETAILS

PROJECT TITLE

FACILITIES SUPPORT CENTER BUILDING
100% FINAL DESIGN SUBMITTAL

APPROVALS	DATE
Chief, Facilities Engineering Division Office: DAN CROWLEY	4/14/11
Project Requestor /Custom: DAN CROWLEY	4/14/11
Facilities Project Manager: GEMMA FLORES	4/14/11
Chief, Office of Protective Services: JOHN ZELLMER	4/14/11
Chief - Safety, Health, and Environmental Office: DAN MULLEN	4/14/11
DFRC Chief Information Officer: KEN NORLIN	4/14/11

DATE STRTD	11/10/10	DATE PRNTD	03/14/11
DRAWN BY		EDM-1703	
SCALE	AS NOTED	TRADE SH. No.	A11.2
FILE NAME		SHEET No. 81 of 193	

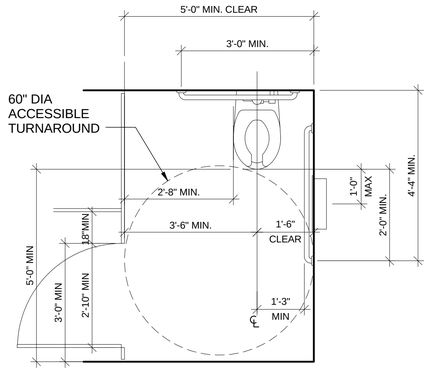

ACCESSIBLE TOILET STALL

SCALE: 1/2" = 1'-0" | 10 | A8.1 | A11.3

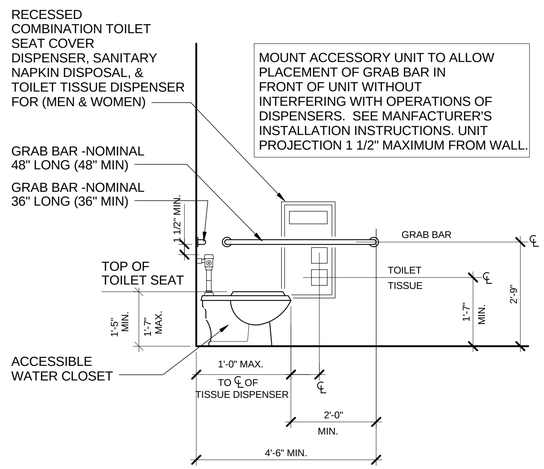

ACCESSIBLE TOILET STALL ELEV.

SCALE: N.T.S. | 7 | A8.1 | A11.3

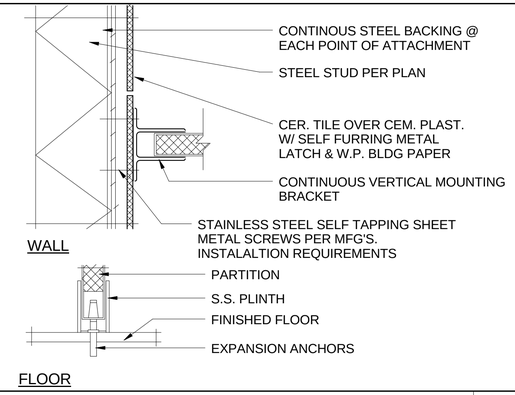

TOILET PARTITION ANCHORAGE

SCALE: 12" = 1'-0" | 4 | A8.1 | A11.3

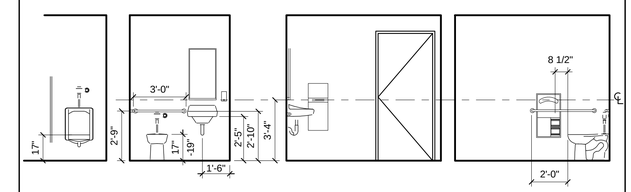

GRAB BAR DIAMETER SHALL BE 1-1/4" TO 1-1/2"

GRAB BARS SHALL SUPPORT 250 LBS POINT LOAD MIN.

TOILET PAPER DISPENSERS THAT CONTROL DELIVERY OR THAT DO NOT ALLOW CONTINUOUS PAPER FLOW SHALL NOT BE USED.

INSULATE WATER AND WASTE PIPES BELOW LAVATORY WITH ADA COMPLIANT CLOSED-CELL FOAM LINING ENCASED IN ONE-PIECE TAMPER RESISTANT VINYL JACKET COMPLETE WITH REQUIRED FASTENERS

ACCESSIBILITY STANDARDS

SCALE: 12" = 1'-0" | 1 | A8.1 | A11.3

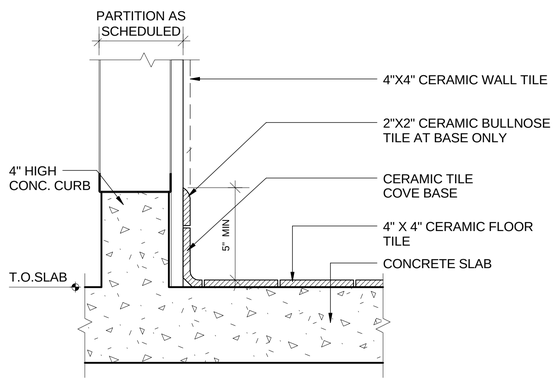

TYPICAL TILE BASE DETAIL

SCALE: 3" = 1'-0" | 11 | A8.1 | A11.3

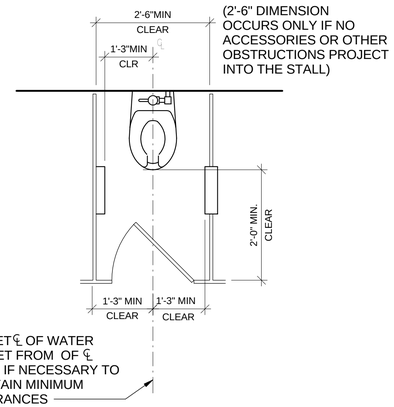

ACCESSIBLE TOILET STALL - TYPICAL

SCALE: N.T.S. | 8 | A8.1 | A11.3

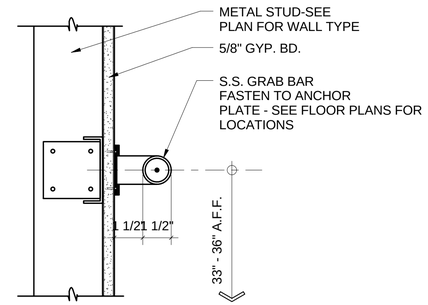

GRAB BAR DETAIL

SCALE: 3" = 1'-0" | 5 | A8.1 | A11.3

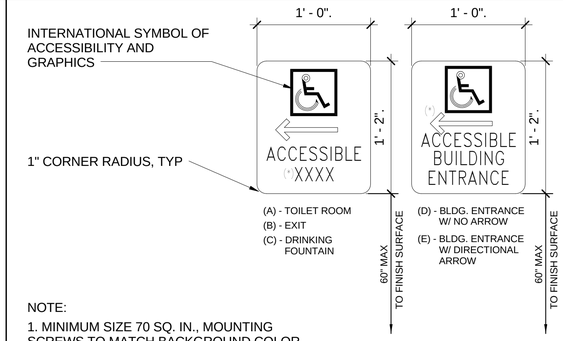

NOTE:

1. MINIMUM SIZE 70 SQ. IN., MOUNTING SCREWS TO MATCH BACKGROUND COLOR
2. SIGN MATERIAL SHALL BE ACID ETCHED ZINC.
3. VERIFY DIRECTION OF ARROW PRIOR TO FABRICATION

ACCESSIBLE SIGNAGE

SCALE: 12" = 1'-0" | 2 | A8.1 | A11.3

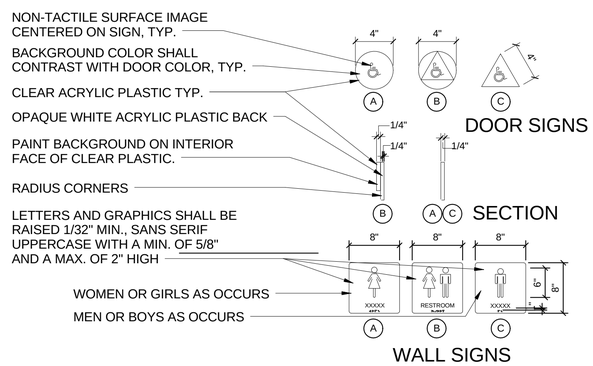

NOTE:

ATTACH SIGNS WITH SILICON ADHESIVE AND NON-CORROSIVE, VANDAL RESISTANT FLAT HEAD SCREWS

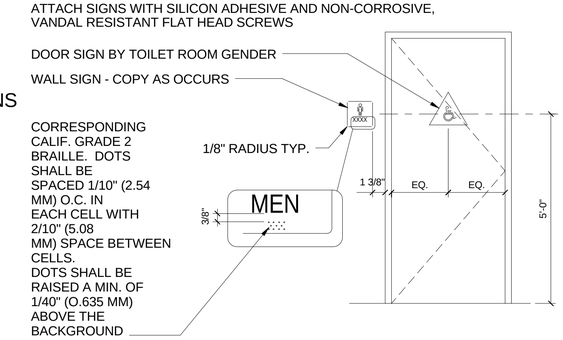

ACCESSIBLE TOILET RM. SIGNAGE

SCALE: 12" = 1'-0" | 3 | A8.1 | A11.3

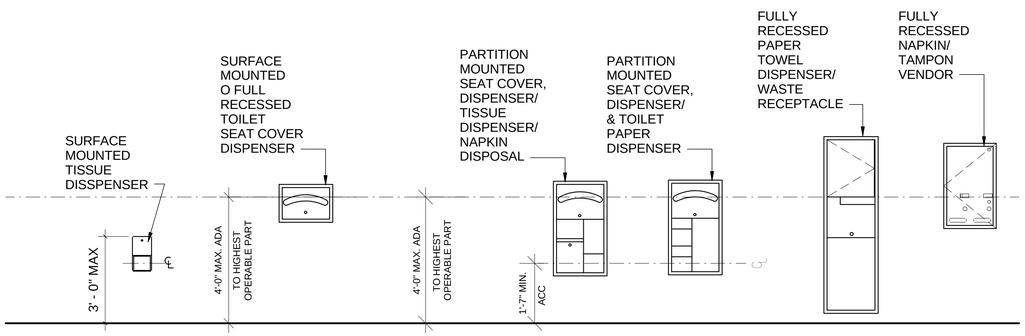

ACCESSIBLE ACCESSORY MOUNTING HEIGHTS

SCALE: N.T.S. | 9 | A8.1 | A11.3

DEVELOPMENT ONE, INC.
1611 East Fourth Street, Suite 250
Santa Ana, California 92701
J. Bruce Camino, Architect, AIA, NCARB
(714) 689-0298
(714) 648-0197 FAX

DATE	SYM	REVISION	BY	A'PD

NATIONAL AERONAUTICS AND SPACE ADMINISTRATION

DRYDEN FLIGHT RESEARCH CENTER
EDWARDS, CA

DRAWING TITLE

TOILET ROOM ACCESSIBILITY DETAILS

PROJECT TITLE

FACILITIES SUPPORT CENTER BUILDING
100% FINAL DESIGN SUBMITTAL

APPROVALS	DATE
Chief, Facilities Engineering Division Project Office DAN CROWLEY	4/14/11
Project Requestor /Customer DAN CROWLEY	4/14/11
Facilities Project Manager GEMMA FLORES	4/14/11
Chief, Office of Protective Services JOHN ZELLMER	4/14/11
Chief - Safety, Health, and Environmental Office DAN MULLEN	4/14/11
DFRC Chief Information Officer KEN NORLIN	4/14/11

DATE STRTD	02/22/11	DATE PRNTD	03/14/11
DRAWN BY		EDM-1703	
SCALE	AS NOTED	TRADE SH. No.	
FILE NAME		A11.3	SHEET No. 82 of 193

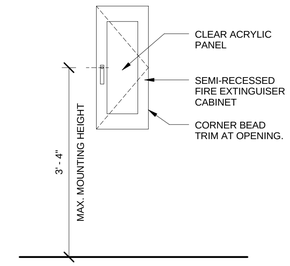

FIRE EXTINGUISHER ELEVATION

SCALE: 3/4" = 1'-0" | 4 | A2.3 A11.4

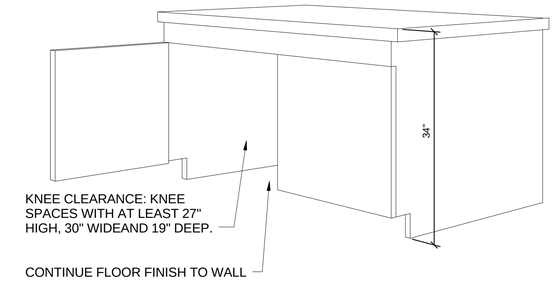

ACCESSIBLE CABINET ISO

SCALE: 1" = 1'-0" | 1 | A8.2 A11.4

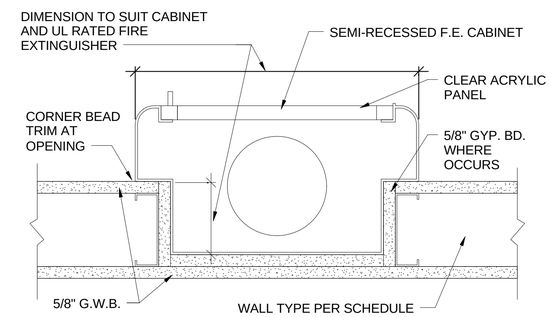

FIRE EXTINGUISHER CABINET

SCALE: 3" = 1'-0" | 5 | A2.3 A11.4

NOTES:
1. BACKING: 14 GA x 4" SHEET METAL SCREWED TO MIN OF 3-16 GA METAL STUDS. EVERY 4 TH STUD SHALL RUN SLAB TO SLAB.
2. SEE INTERIOR ELEVATIONS FOR CABINET CONFIGURATIONS AND DIMENSIONS

CABINET BACKING ELEVATION

SCALE: 1/2" = 1'-0" | 2 | A8.2 A11.4

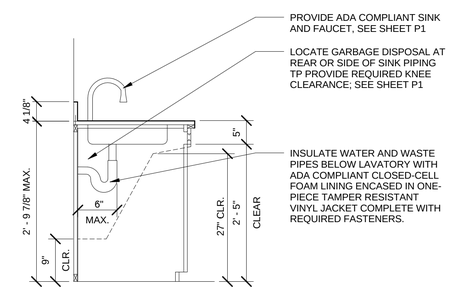

ACCESSIBLE SINK SECTION

SCALE: 3/4" = 1'-0" | 6 | A8.2 A11.4

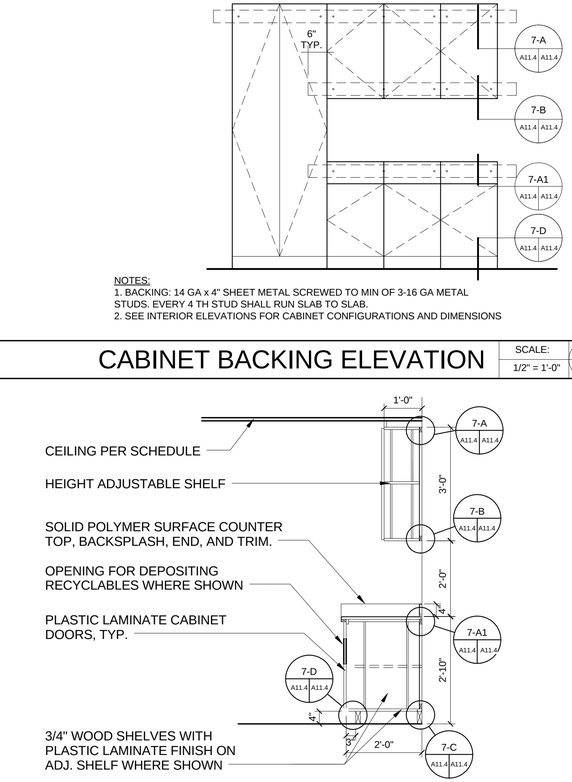

CASEWORK SECTION

SCALE: 1/2" = 1'-0" | 3 | A8.2 A11.4

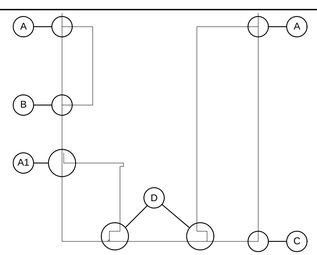

CABINET ANCHORAGE	REFERENCE
VERTICAL LOAD REQUIREMENT	TABLE NUMBER 23B TITLE 24
LATERAL FORCE REQUIREMENT	TABLE NUMBER 23P TITLE 24
CABINET SIZE	**ANCHOR SPACING**
3' WIDE CABINET	2 ANCHORS ACROSS PER CABINET
4' WIDE CABINET	3 ANCHORS ACROSS PER CABINET

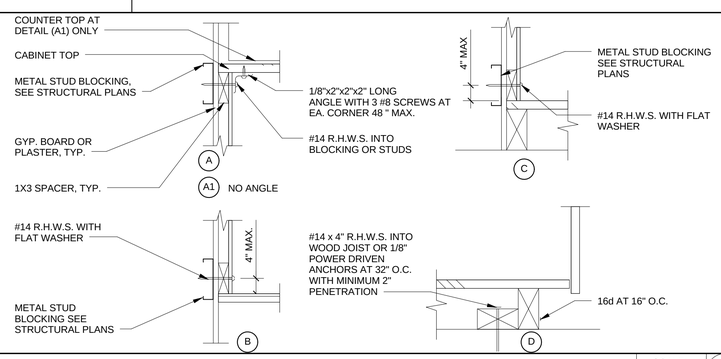

CABINET BACKING DETAILS

SCALE: 12" = 1'-0" | 7 | A11.4 A11.4

LICENSED ARCHITECT
J. BRUCE CAMINO
C23740
Signature
10/31/11
RenewalDate
STATE OF CALIFORNIA

DEVELOPMENT ONE, INC.
1611 East Fourth Street, Suite 250
Santa Ana, California 92701
J. Bruce Camino, Architect, AIA, NCARB
(714) 689-0298
(714) 648-0197 FAX

DATE	SYM	REVISION	BY	A'PD

NATIONAL AERONAUTICS AND SPACE ADMINISTRATION

DRYDEN FLIGHT RESEARCH CENTER
EDWARDS, CA

DRAWING TITLE

MILLWORK DETAILS

PROJECT TITLE

FACILITIES SUPPORT CENTER BUILDING
100% FINAL DESIGN SUBMITTAL

APPROVALS	DATE
Chief, Facilities Engineering Division Office, DAN CROWLEY	4/14/11
Project Requestor /Customer, DAN CROWLEY	4/14/11
Facilities Project Manager, GEMMA FLORES	4/14/11
Chief, Office of Protective Services, JOHN ZELLMER	4/14/11
Chief - Safety, Health, and Environmental Office, DAN MULLEN	4/14/11
DFRC Chief Information Officer, KEN NORLIN	4/14/11

DATE STRTD	11/10/10	DATE PRNTD	03/14/11
DRAWN BY		EDM-1703	
SCALE	AS NOTED	TRADE SH. No.	
FILE NAME		A11.4	SHEET No. 83 of 193

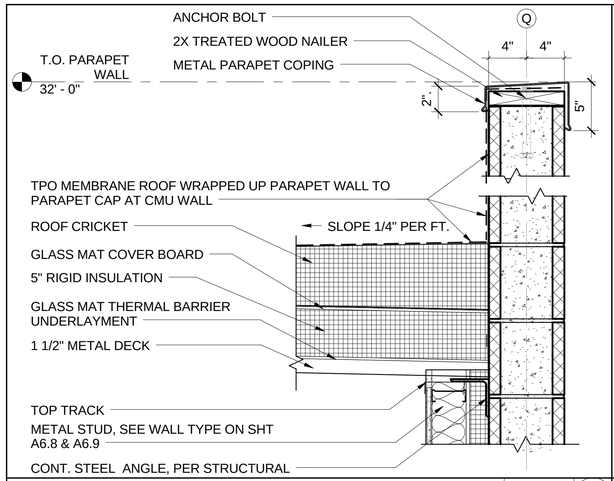

DETAIL SCALE: 1 1/2" = 1'-0" 8 A4.2 A12.0

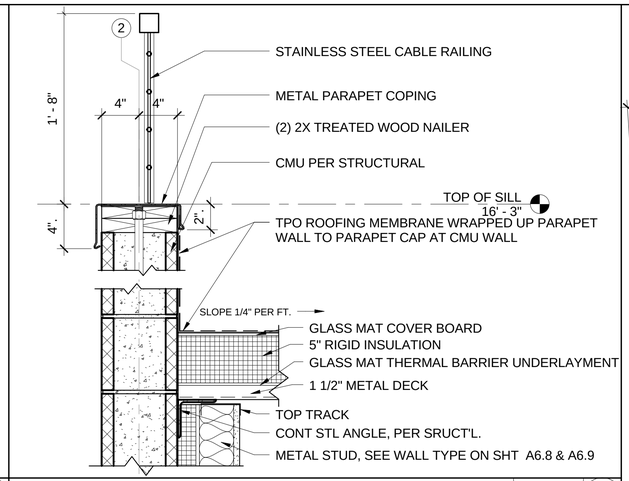

DETAIL SCALE: 1 1/2" = 1'-0" 9 A4.2 A12.0

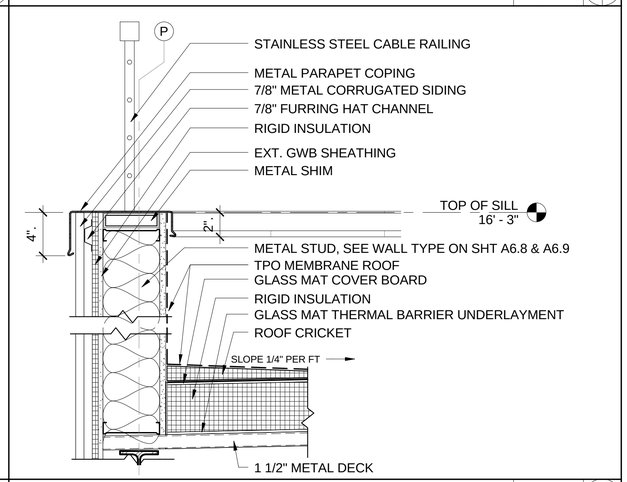

DETAIL SCALE: 1 1/2" = 1'-0" 7 A6.3 A12.0

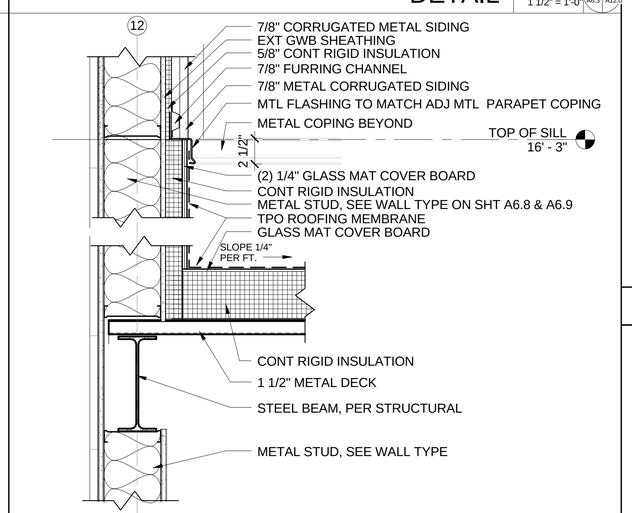

DETAIL SCALE: 1 1/2" = 1'-0" 5 A6.1 A12.0

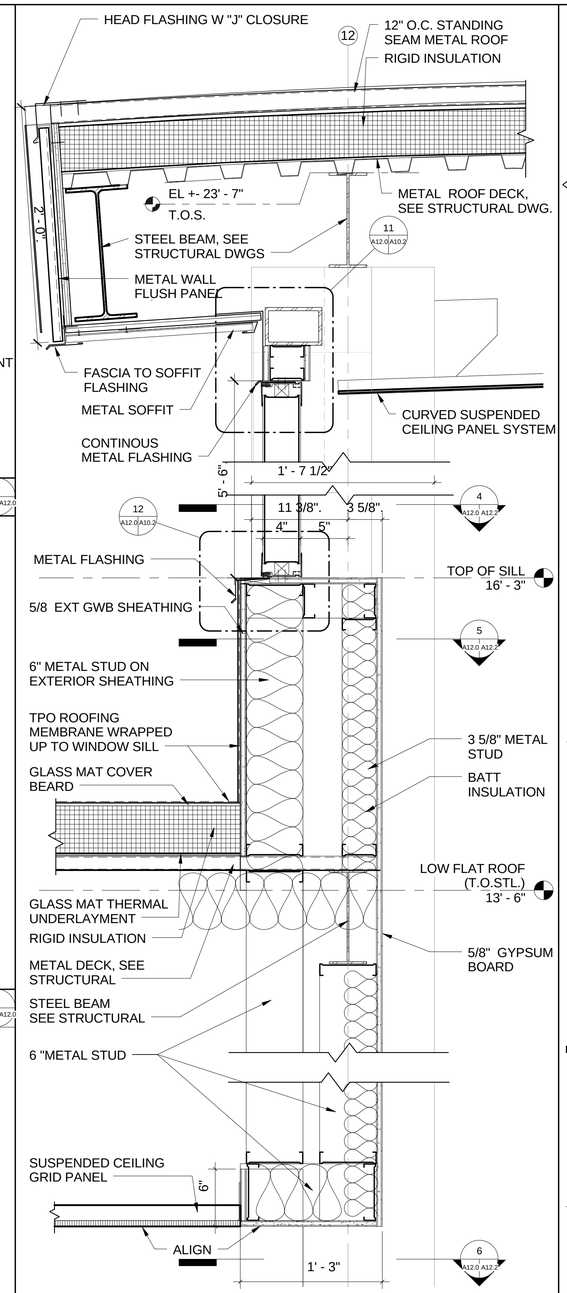

DETAIL SCALE: 1 1/2" = 1'-0" 2 A4.0 A12.0

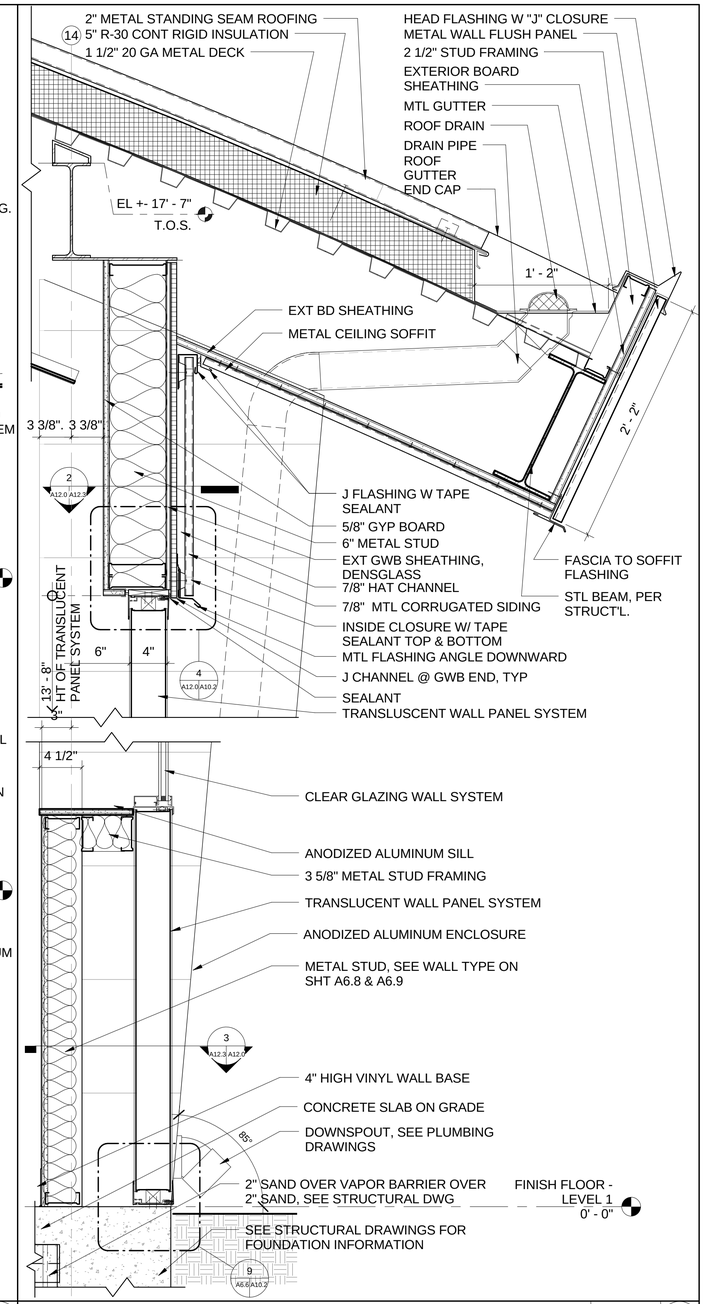

DETAIL SCALE: 1 1/2" = 1'-0" 1 A4.0 A12.0

REGISTERED ARCHITECT
J. BRUCE CAMINO
C23740
Signature
10/31/11
RenewalDate
STATE OF CALIFORNIA

DEVELOPMENT ONE, INC.
1611 East Fourth Street, Suite 250
Santa Ana, California 92701
J. Bruce Camino, Architect, AIA, NCARB
(714) 689-0298
(714) 648-0197 FAX

DATE	SYM	REVISION	BY	A'PD

NATIONAL AERONAUTICS AND SPACE ADMINISTRATION

DRYDEN FLIGHT RESEARCH CENTER
EDWARDS, CA

DRAWING TITLE

EXTERIOR DETAILS

PROJECT TITLE

FACILITIES SUPPORT CENTER BUILDING
100% FINAL DESIGN SUBMITTAL

APPROVALS	DATE
Chief, Facilities Engineering Division Project Office DAN CROWLEY	4/14/11
Project Requestor /Customer DAN CROWLEY	4/14/11
Facilities Project Manager GEMMA FLORES	4/14/11
Chief, Office of Protective Services JOHN ZELLMER	4/14/11
Chief - Safety, Health, and Environmental Office DAN MULLEN	4/14/11
DFRC Chief Information Officer KEN NORLIN	4/14/11

DATE STRTD	12/08/10	DATE PRNTD	03/14/11
DRAWN BY		EDM-1703	
SCALE	AS NOTED	TRADE SH. No.	A12.0
FILE NAME		SHEET No. 84 of 193	

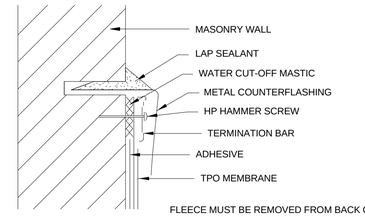

FLEECE MUST BE REMOVED FROM BACK OF MEMBRANE SO WATER CUT-OFF MASTIC IS IN DIRECT CONTACT WITH TPO MEMBRANE

NOTES:

1. WATER CUT-OFF MASTIC MUST BE HELD UNDER CONSTANT COMPRESSION.
2. DO NOT WRAP COMPRESSION TERMINATION AROUND CORNERS.
3. ALLOW 1/4 MINIMUM TO 1/2" MAXIMUM (6 TO 12 mm) SPACING BETWEEN CONSECUTIVE LENGTHS OF TERMINATION BAR.

CNTRFLASHING/ TERMINATION BAR

SCALE: 12" = 1'-0" | 3 | A6.9 | A12.1

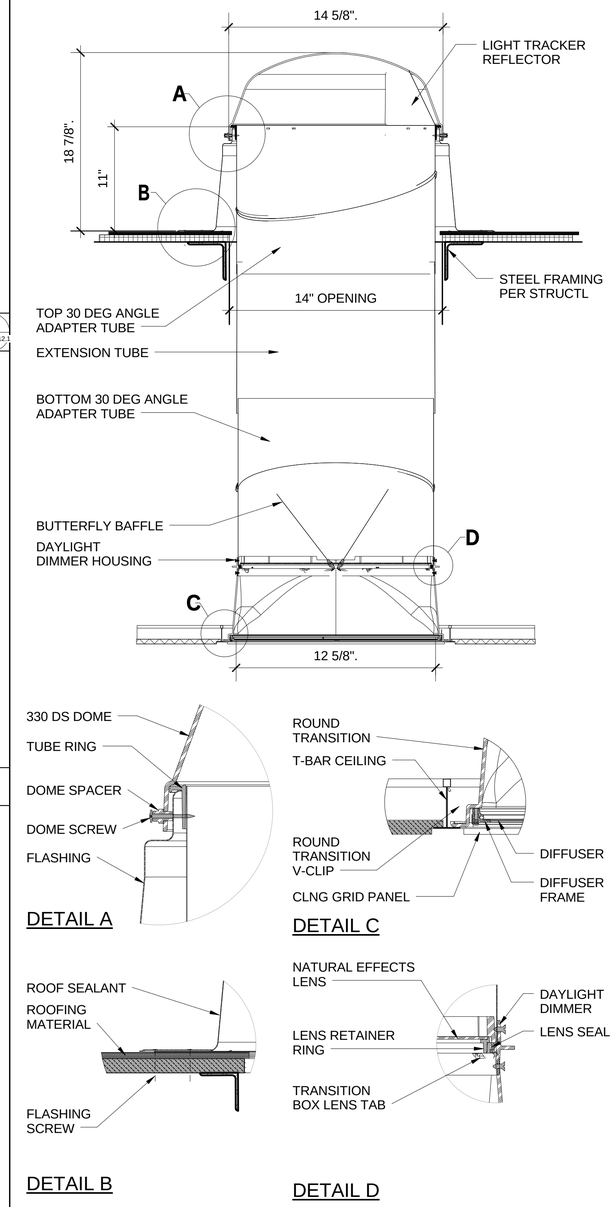

TUBULAR DAYLIGHTING DETAIL

SCALE: 1 1/2" = 1'-0" | 1 | A6.3 | A12.1

DEVELOPMENT ONE, INC.
1611 East Fourth Street, Suite 250
Santa Ana, California 92701
J. Bruce Camino, Architect, AIA, NCARB
(714) 689-0298
(714) 648-0197 FAX

DATE	SYM	REVISION	BY	A'PD

NATIONAL AERONAUTICS AND SPACE ADMINISTRATION
DRYDEN FLIGHT RESEARCH CENTER
EDWARDS, CA

DRAWING TITLE
EXTERIOR DETAILS

PROJECT TITLE
FACILITIES SUPPORT CENTER BUILDING
100% FINAL DESIGN SUBMITTAL

APPROVALS	DATE
Chief, Facilities Engineering & Assist Mgmt Office DAN CROWLEY	4/14/11
Project Requestor /Customer DAN CROWLEY	4/14/11
Facilities Project Manager GEMMA FLORES	4/14/11
Chief, Office of Protective Services JOHN ZELLMER	4/14/11
Chief - Safety, Health, and Environmental Office DAN MULLEN	4/14/11
DFRC Chief Information Officer KEN NORLIN	4/14/11

DATE STRTD	12/17/10	DATE PRNTD	03/14/11
DRAWN BY		EDM-1703	
SCALE	AS NOTED	TRADE SH. No.	
FILE NAME		A12.1	SHEET No. 85 of 193

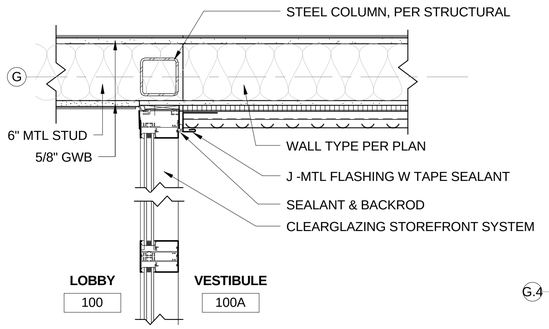

DETAIL SCALE: 1 1/2" = 1'-0" 11 A2.3 A12.2

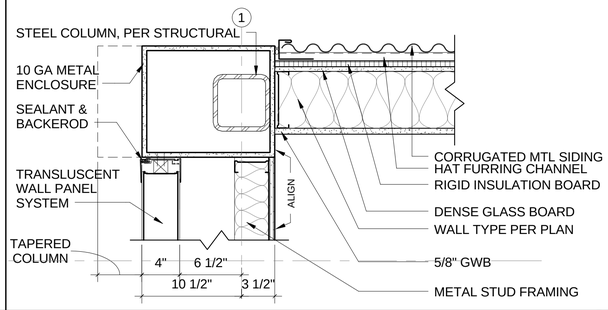

DETAIL SCALE: 1 1/2" = 1'-0" 7 A2.4 A12.2

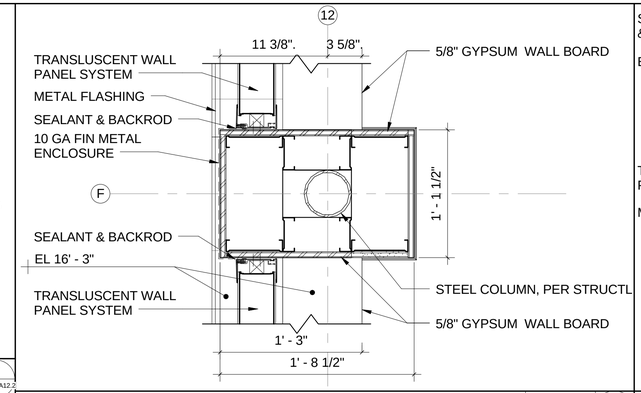

DETAIL SCALE: 1 1/2" = 1'-0" 4 A12.2

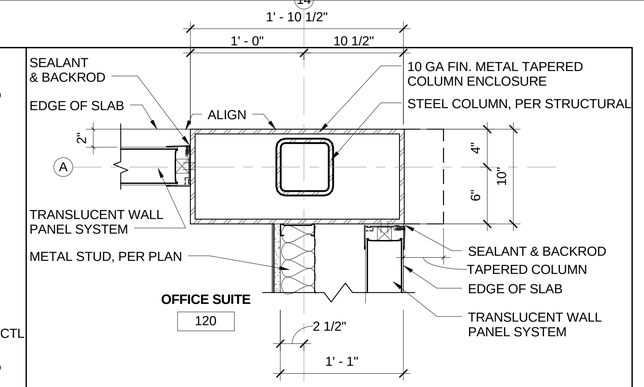

DETAIL SCALE: 1 1/2" = 1'-0" 1 A2.6 A12.2

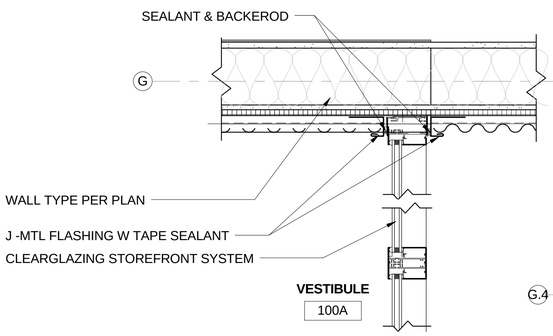

DETAIL SCALE: 1 1/2" = 1'-0" 12 A2.3 A12.2

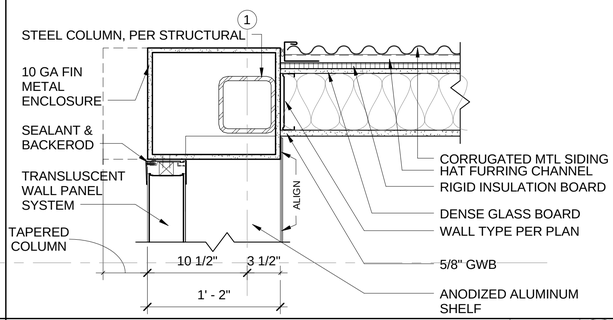

DETAIL SCALE: 1 1/2" = 1'-0" 8 A2.4 A12.2

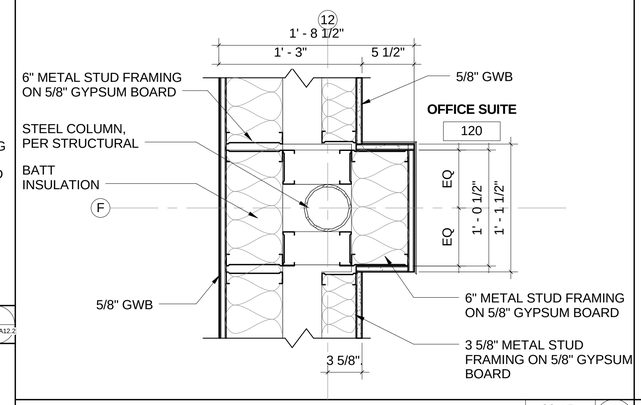

DETAIL SCALE: 1 1/2" = 1'-0" 5 A12.2

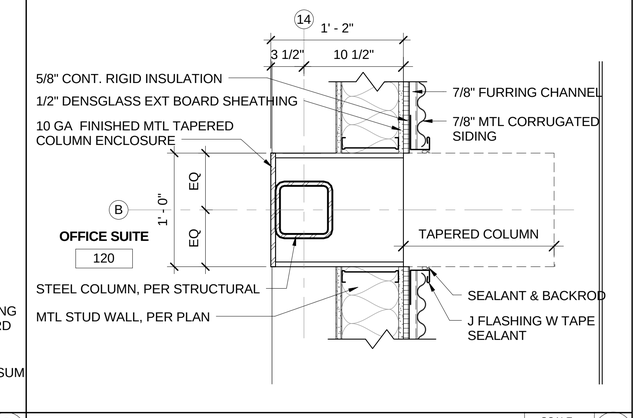

DETAIL SCALE: 1 1/2" = 1'-0" 2 A12.2

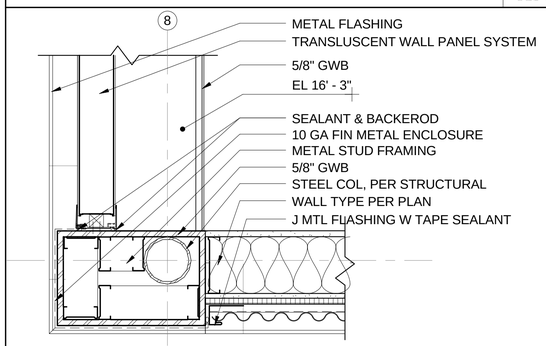

DETAIL SCALE: 1 1/2" = 1'-0" 13 A4.1 A12.2

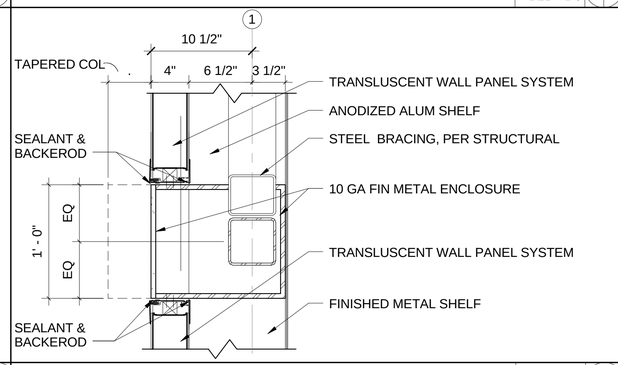

DETAIL SCALE: 1 1/2" = 1'-0" 9 A2.4 A12.2

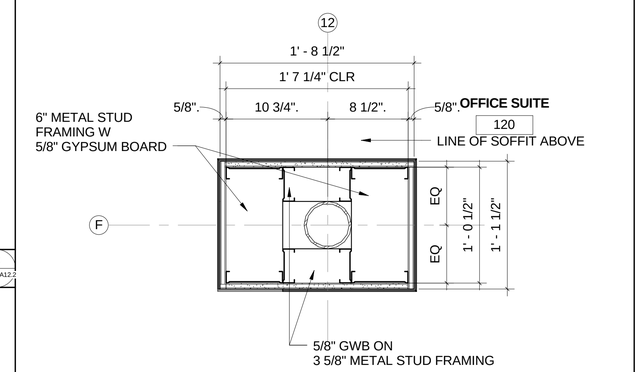

DETAIL SCALE: 1 1/2" = 1'-0" 6 A2.3 A12.2

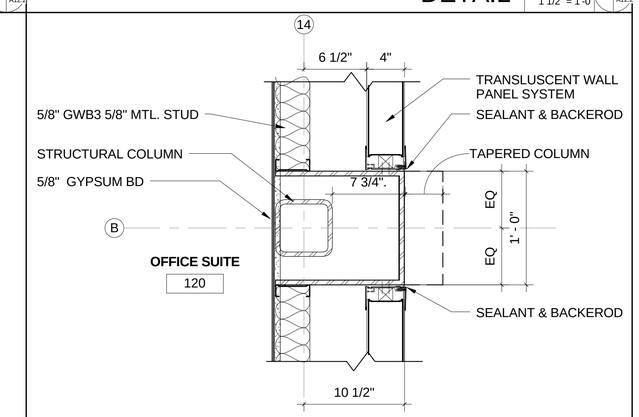

DETAIL SCALE: 1 1/2" = 1'-0" 3 A2.3 A12.2

NOTE:
CONTRACTOR TO PROVIDE SHOP DRAWINGS PER SPECIFICATIONS FOR ATTACHMENTS OF FINISHED METAL ENCLOSURE TO STRUCTURE. TYPICAL.

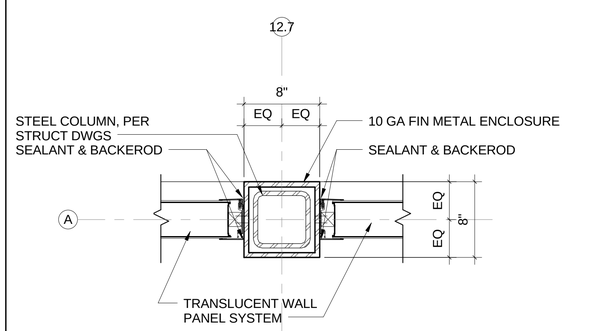

DETAIL SCALE: 1 1/2" = 1'-0" 10 A2.6 A12.2

DEVELOPMENT ONE, INC.
1611 East Fourth Street, Suite 250
Santa Ana, California 92701
J. Bruce Camino, Architect, AIA, NCARB
(714) 689-0298
(714) 648-0197 FAX

DATE	SYM	REVISION	BY	A'PD

NATIONAL AERONAUTICS AND SPACE ADMINISTRATION
DRYDEN FLIGHT RESEARCH CENTER
EDWARDS, CA

DRAWING TITLE
WALL/ COLUMN DETAILS

PROJECT TITLE
FACILITIES SUPPORT CENTER BUILDING
100% FINAL DESIGN SUBMITTAL

APPROVALS	DATE
Chief, Facilities Engineering Assoc. Project Office DAN CROWLEY	4/14/11
Project Requestor /Customer DAN CROWLEY	4/14/11
Facilities Project Manager GEMMA FLORES	4/14/11
Chief, Office of Protective Services JOHN ZELLMER	4/14/11
Chief - Safety, Health, and Environmental Office DAN MULLEN	4/14/11
DFRC Chief Information Officer KEN NORLIN	4/19/11

DATE STRTD	12/17/10	DATE PRNTD	03/14/11
DRAWN BY		EDM-1703	
SCALE	AS NOTED	TRADE SH. No.	
FILE NAME		A12.2	SHEET No. 86 of 193

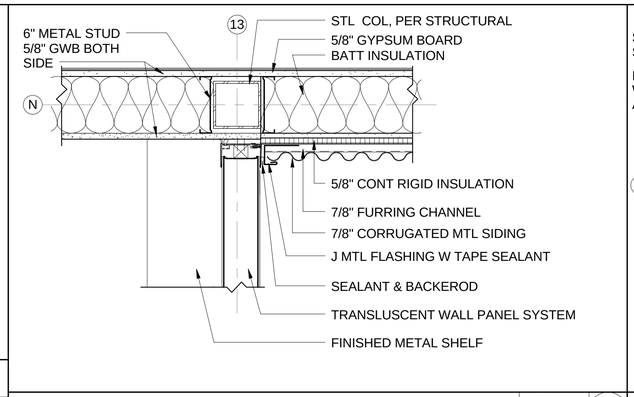

DETAIL SCALE: 1 1/2" = 1'-0" 4 A9.2 A12.3

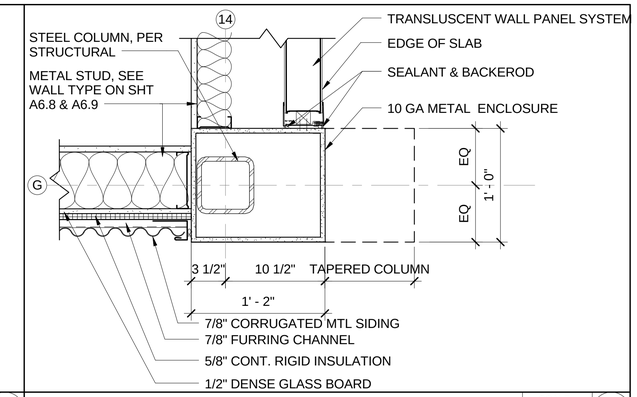

DETAIL SCALE: 1 1/2" = 1'-0" 1 A12.3

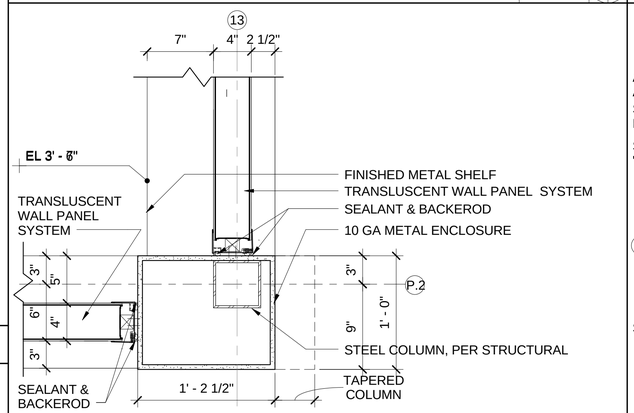

DETAIL SCALE: 1 1/2" = 1'-0" 5 A9.2 A12.3

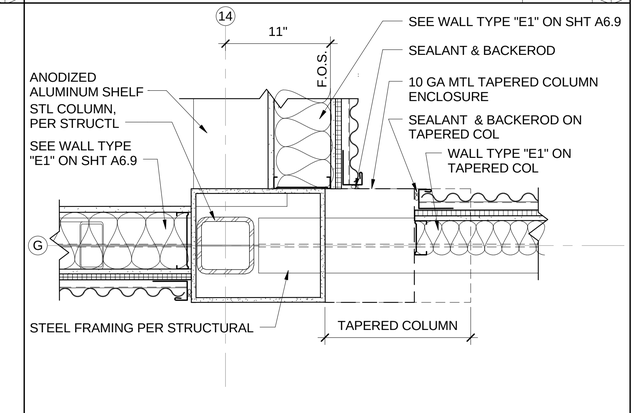

DETAIL SCALE: 1 1/2" = 1'-0" 2 A4.1 A12.3

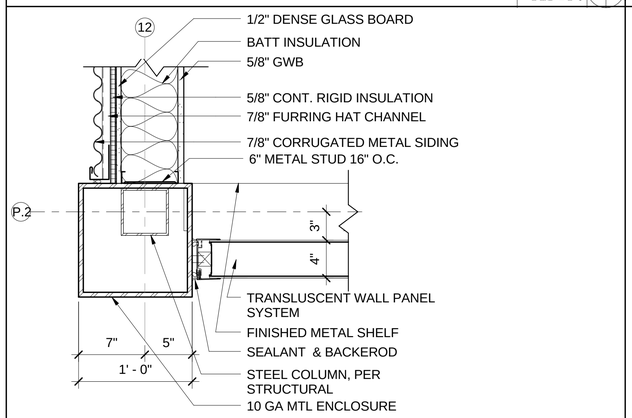

DETAIL SCALE: 1 1/2" = 1'-0" 6 A9.2 A12.3

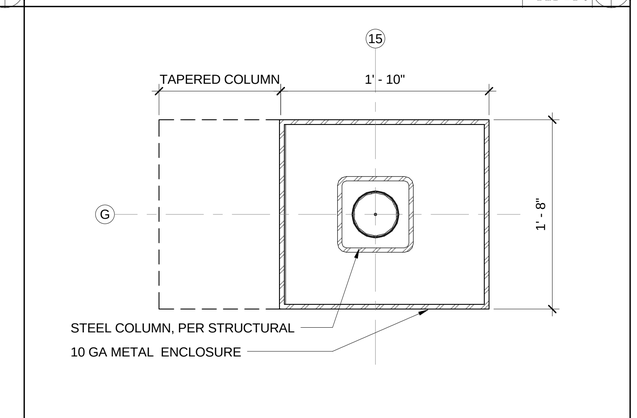

DETAIL SCALE: 1 1/2" = 1'-0" 3 A2.3 A12.3

NOTE:
CONTRACTOR TO PROVIDE SHOP DRAWINGS PER SPECIFICATIONS FOR ATTACHMENTS OF FINISHED METAL ENCLOSURE TO STRUCTURE. TYPICAL.

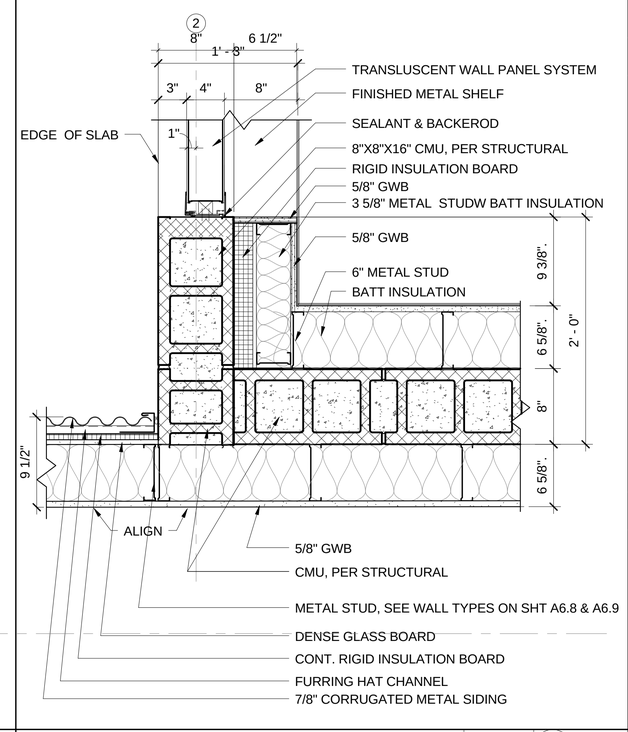

REFERENCE CALLOUT PLAN G2 SCALE: 1 1/2" = 1'-0" 9 A2.3 A12.3

DEVELOPMENT ONE, INC.
1611 East Fourth Street, Suite 250
Santa Ana, California 92701
J. Bruce Camino, Architect, AIA, NCARB
(714) 689-0298
(714) 648-0197 FAX

DATE	SYM	REVISION	BY	A'PD

NATIONAL AERONAUTICS AND SPACE ADMINISTRATION

DRYDEN FLIGHT RESEARCH CENTER
EDWARDS, CA

DRAWING TITLE

WALL/ COLUMN DETAILS

PROJECT TITLE

FACILITIES SUPPORT CENTER BUILDING
100% FINAL DESIGN SUBMITTAL

APPROVALS		DATE
Chief, Facilities Engineering Division/ Project Office DAN CROWLEY		4/14/11
Project Requestor /Customer DAN CROWLEY		4/14/11
Facilities Project Manager GEMMA FLORES		4/14/11
Chief, Office of Protective Services JOHN ZELLMER		4/14/11
Chief - Safety, Health, and Environmental Office DAN MULLEN		4/14/11
DFRC Chief Information Officer KEN NORLIN		4/14/11

DATE STRTD	02/21/11	DATE PRNTD	03/14/11
DRAWN BY		EDM-1703	
SCALE	AS NOTED	TRADE SH. No.	
FILE NAME		A12.3	SHEET No. 87 of 193

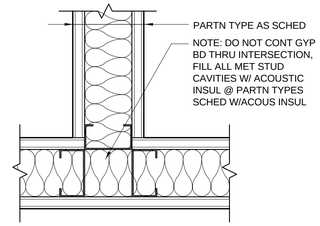

PLAN A

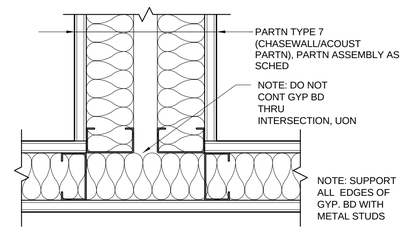

PLAN B

TYP PARTITION INTERSECTIONS

SCALE: 3" = 1'-0" (3 / A13.0)

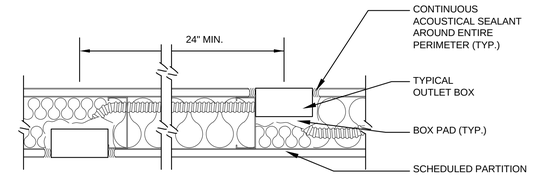

TYPICAL SINGLE STUD PARTITION
WITH SOUND ISOLATION

NOTES:

1. PLACE OUTLET BOXES IN SEPARATE STUD SPACES
2. BACK-TO-BACK OUTLETS NOT PERMITTED.
3. PLUG ALL UNUSED KNOCK-OUTS IN OUTLET BOXES WITH KNOCK-OUT CAPS.
4. PROVIDE BACKING EQUIVALENT TO OUTLET BOX PADS
5. DEPTH OF OUTLET BOX MUST BE COMPATIBLE WITH STUD SIZE IN ORDER TO ACCOMMODATE BOX PAD.
6. ACOUSTICAL BOX PAD REQUIREMENT APPLIES TO ALL PARTITIONS WITH ACOUSTICAL INSULATION.

(APPLIES TO POWER, PHONE, COMMUNICATIONS, ETC.)

TYPICAL OUTLET BOX DETAILS

SCALE: 3" = 1'-0" (1 / A13.0)

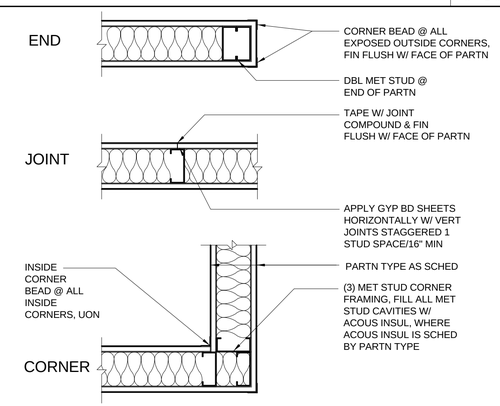

PARTITION @ CORNER & END COND.

SCALE: 1 1/2" = 1'-0" (2 / A13.0)

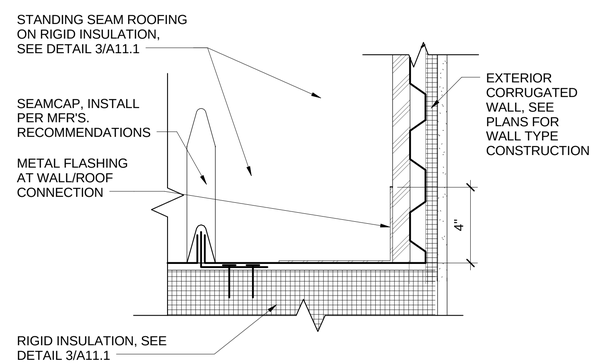

ROOF FLASHING

SCALE: 3" = 1'-0" (4 / A6.2 A13.0)

DEVELOPMENT ONE, INC.
1611 East Fourth Street, Suite 250
Santa Ana, California 92701
J. Bruce Camino, Architect, AIA, NCARB
(714) 689-0298
(714) 648-0197 FAX

DATE	SYM	REVISION	BY	A'PD

NATIONAL AERONAUTICS AND SPACE ADMINISTRATION

DRYDEN FLIGHT RESEARCH CENTER
EDWARDS, CA

DRAWING TITLE

MISC. DETAILS

PROJECT TITLE

FACILITIES SUPPORT CENTER BUILDING
100% FINAL DESIGN SUBMITTAL

APPROVALS	DATE
Chief, Facilities Engineering Division, Office DAN CROWLEY	4/14/11
Project Requestor (Customer) DAN CROWLEY	4/14/11
Facilities Project Manager GEMMA FLORES	4/14/11
Chief, Office of Protective Services JOHN ZELLMEIR	4/14/11
Chief - Safety, Health, and Environmental Office DAN MULLEN	4/14/11
DFRC Chief Information Officer KEN NORLIN	4/14/11

DATE STRTD	02/21/11	DATE PRNTD	03/14/11
DRAWN BY		EDM-1703	
SCALE	AS NOTED	TRADE SH. No.	
FILE NAME		A13.0	SHEET No. 88 of 193

GENERAL REQUIREMENTS

1. VERIFICATION: VERIFY ALL DIMENSIONS, ELEVATIONS AND SITE CONDITIONS BEFORE STARTING WORK. NOTIFY THE CONTRACTING OFFICER IMMEDIATELY OF ANY DISCREPANCIES.

2. CONFLICTS: NOTES AND DETAILS ON THE DRAWINGS TAKE PRECEDENCE OVER THE GENERAL NOTES AND TYPICAL DETAILS IN CASE OF CONFLICT.

3. CODES: ALL MATERIALS AND WORK SHALL CONFORM TO THE REQUIREMENTS OF THE GOVERNING CODE.

4. SUBSTITUTIONS: PROVIDE MANUFACTURER'S ICC REPORTS AND A LIST OF ALL PROPOSED SUBSTITUTIONS TO THE CONTRACTING OFFICER FOR REVIEW BEFORE FABRICATION.

5. SIMILAR WORK: WHERE CONSTRUCTION DETAILS ARE NOT SHOWN OR NOTED FOR ANY PART OF THE WORK, SUCH DETAILS SHALL BE THE SAME AS FOR SIMILAR WORK SHOWN ON THE DRAWINGS.

6. CONSTRUCTION LOADS: MATERIALS SHALL BE EVENLY DISTRIBUTED IF PLACED ON FRAMED FLOORS OR ROOFS. LOADS SHALL NOT EXCEED THE ALLOWABLE LOADING FOR THE SUPPORTING MEMBERS AND THEIR CONNECTIONS.

7. STRUCTURAL PLANS INDICATE ONLY THE APPROXIMATE LOCATION OF MECHANICAL, ELECTRICAL AND OTHER EQUIPMENT, AS WELL AS THE RELATED AUXILIARY FRAMING NECESSARY TO SUPPORT SUCH EQUIPMENT. THE FINAL POSITIONING OF THESE ITEMS IS DEPENDENT UPON THE EQUIPMENT PROVIDED. THE CONTRACTOR SHALL BE RESPONSIBLE FOR COORDINATING WORK BETWEEN SUBCONTRACTORS AND CRAFTS IN THIS REGARD, AND PROVIDING NECESSARY DIMENSIONS IN A TIMELY MANNER TO ALL PARTIES INVOLVED.

8. PIPES, DUCTS, SLEEVES, CHASES, ETC.: SHALL NOT BE PLACED IN SLABS, BEAMS, OR WALLS UNLESS SPECIFICALLY SHOWN OR NOTED NOR SHALL ANY STRUCTURAL MEMBER BE CUT FOR PIPES, DUCTS, ETC., UNLESS SPECIFICALLY SHOWN. OBTAIN PRIOR WRITTEN APPROVAL FOR INSTALLATION OF ANY ADDITIONAL PIPES, DUCTS, ETC.

9. EXCAVATIONS: LOCATE AND PROTECT UNDERGROUND OR CONCEALED CONDUIT, PLUMBING OR OTHER UTILITIES WHERE NEW WORK IS BEING PERFORMED.

10. THE STRUCTURAL DRAWINGS ILLUSTRATE THE NEW STRUCTURAL MEMBERS. REFER TO ARCHITECTURAL, MECHANICAL AND ELECTRICAL DRAWINGS FOR NON-STRUCTURAL ITEMS WHICH REQUIRE SPECIAL PROVISIONS DURING THE CONSTRUCTION OF THE STRUCTURAL MEMBERS.

11. REFER TO ARCHITECTURAL PLANS FOR FLOOR DEPRESSIONS, SLOPES, DRAINS, CURBS, PADS, EMBEDDED ITEMS, NON-BEARING PARTITIONS, ETC. REFER TO MECHANICAL AND ELECTRICAL PLANS FOR SLEEVES AND HANGERS FOR PIPES, DUCTS AND EQUIPMENT.

12. CONSTRUCTION METHODS AND PROJECT SAFETY: THE CONTRACT DRAWINGS AND SPECIFICATIONS REPRESENT THE FINISHED STRUCTURE AND DO NOT INDICATE METHODS, PROCEDURES OR SEQUENCE OF CONSTRUCTION. THE CONTRACTOR SHALL TAKE NECESSARY PRECAUTIONS TO MAINTAIN AND INSURE THE INTEGRITY OF THE STRUCTURE DURING CONSTRUCTION. NEITHER THE GOVERNMENT, ARCHITECT NOR ENGINEER WILL ENFORCE SAFETY MEASURES OR REGULATIONS. THE CONTRACTOR SHALL DESIGN, CONSTRUCT AND MAINTAIN ALL SAFETY DEVICES, INCLUDING SHORING AND BRACING, AND BE SOLELY RESPONSIBLE FOR CONFORMING TO ALL LOCAL, STATE AND FEDERAL SAFETY AND HEALTH STANDARDS, LAWS AND REGULATIONS.

13. ANY DEVIATION FROM THE APPROVED SET OF STRUCTURAL DRAWINGS SHALL ONLY BE MADE AFTER WRITTEN APPROVAL.

DESIGN CRITERIA

1. DEAD LOADS:
ROOF...18 PSF
ROOF (WITH TRUSSES).......................................20 PSF
MEZZANINE FLOOR..75 PSF
MECHANICAL ROOF...75 PSF

2. LIVE LOADS:
ROOF (BASIC LIVE LOAD)....................................20 PSF
MEZZANINE FLOOR*...125 PSF
* OR A 2,000 POUND CBC CONCENTRATED LOAD PLUS PARTITIONS

3. LATERAL LOADS:
A) SEISMIC – SHORT PERIOD
SPECTRAL RESPONSE......................... Ss = 0.87 g
ONE – SECOND PERIOD
SPECTRAL RESPONSE....................... S1 = 0.405 g
SITE CLASSIFICATION............................ C
SITE COEFFICIENT.................................. Fa = 1.052
SITE COEFFICIENT.................................. Fv = 1.395
ADJUSTED SPECTRAL RESPONSE........Sms = 0.92 g
ADJUSTED SPECTRAL RESPONSE........Sm1 = 0.56 g
DESIGN SPECTRAL RESPONSE....SDS = 0.61 (2/3 Sms)
DESIGN SPECTRAL RESPONSE....SD1 = 0.38 (2/3 Sm1)
OCCUPANCY CATEGORY: II
SEISMIC DESIGN CATEGORY................. D
rho = 1.0
I = 1.00
LATERAL SYSTEM:
R = 5.0 SPECIAL REINFORCED CMU SHEAR WALLS
R = 3.25 ORDINARY STEEL BRACED FRAMES INDEPENDENT AND ISOLATED ALONG GRID LINE 14
Cs = 1.122
V = CsW = 0.087W (ASD)

B) WIND V = 137 KILOMETERS/HOUR (85 mph)
EXPOSURE C
Iw = 1.0

4. CODES:
A) INTERNATIONAL BUILDING CODE, 2006 EDITION.

B) FEMA 302 "NEHRP RECOMMENDED PROVISIONS FOR SEISMIC REGULATIONS FOR NEW BUILDINGS AND OTHER STRUCTURES, 1997 EDITION."

C) CALIFORNIA CODE OF REGULATIONS, TITLE 24, PART 2, 2007 CALIFORNIA BUILDING CODE.

FOUNDATION

1. FOUNDATION MATERIAL: COMPACTED FILL

2. MINIMUM FOUNDED DEPTH AND WIDTH OF FOOTINGS:
BELOW ROUGH PAD GRADE...24"
BELOW LOWEST ADJACENT FINISHED GRADE.......................................24"
WIDTH...18"

3. SOIL PRESSURES:
SOIL BEARING...1,900 PSF
COEFFICIENT OF FRICTION...0.50
PASSIVE PRESSURE...400 PCF
CANTILEVER ACTIVE (LEVEL)..35 PCF

4. FOUNDING OF FOOTINGS AND SLABS: ON FIRM UNDISTURBED NATURAL SOILS OR APPROVED COMPACTED SOILS.

5. GEOTECHNICAL ENGINEER: SHALL OBSERVE FOOTINGS BEFORE PLACEMENT OF REINFORCING OR CONCRETE. FOOTING OBSERVATION AND COMPACTION REPORTS SHALL BE SENT TO THE ARCHITECT AND THE CONTRACTING OFFICER.

6. ROOF AND AREA DRAINAGE: SHALL BE DIRECTED AWAY FROM THE FOUNDATIONS.

7. BACKFILL: EXCAVATIONS SHALL BE PROPERLY BACKFILLED. BACKFILL FOR WALLS SHALL BE PERVIOUS MATERIAL ACCEPTABLE TO THE GEOTECHNICAL ENGINEER. DO NOT PLACE BACKFILL BEHIND WALLS BEFORE THEY HAVE ATTAINED THEIR DESIGN STRENGTH. SHORE AND PROTECT WALLS FROM LATERAL LOADS UNTIL THE SUPPORTING MEMBERS ARE IN PLACE AND HAVE DEVELOPED SPECIFIED STRENGTHS.

REINFORCED CONCRETE (IBC CHAPTER 19)

1. MATERIALS:
CEMENT...............................ASTM C-150 TYPE II
AGGREGATE........................ASTM C-33 CRUSHED ROCK
REINFORCEMENT................ASTM A-615 GRADE 60 TYPICAL
ANCHOR BOLTS(RODS)......ASTM F-1554 HEADED MACHINE BOLTS, GRADE 36

2. CONCRETE STRENGTHS: THE CONCRETE STRENGTHS SHOWN IN THE FOLLOWING TABLE ARE THE MINIMUM COMPRESSIVE STRENGTHS AT 28 DAYS; AND THE WATER/CEMENT RATIO IS THE MAXIMUM. THE SPECIFIED SLUMP IS THE MAXIMUM PRIOR TO THE ADDITION OF ADMIXTURES. CONCRETE SHALL BE STANDARD WEIGHT CONCRETE (145 PCF).

ITEMS OF CONSTRUCTION	STRENGTH (PSI)	AGG (IN)	SLUMP (IN)	WATER/CEMENT (LB/LB)
FOUNDATIONS........................	3,000	1	4	0.57
SLABS-ON-GRADE..................	3,000	1	4	0.57
STRUCTURAL CONCRETE...... ON METAL DECK	3,500	1/2	4	0.55

3. CONCRETE SHALL BE PROPORTIONED SUCH THAT 7 DAY STRENGTHS ARE A MINIMUM OF SEVENTY PERCENT OF THE SPECIFIED 28 DAY STRENGTH FOR ANY CONCRETE CONSTRUCTION REQUIRING SHORING, BRACING OR TO RECEIVE CONSTRUCTION LOADS. IN ADDITION, SLABS-ON-GRADE SHALL HAVE A COMPRESSIVE STRENGTH OF AT LEAST 1,800 PSI AT THREE DAYS IF SUBJECT TO CONSTRUCTION TRAFFIC.

4. REINFORCEMENT:
A) SHOP DRAWINGS, FABRICATION AND PLACING: SHALL CONFORM TO ACI 315 AND ACI 318.

B) MINIMUM CONCRETE COVER:
EXPOSED TO EARTH...3"
EXPOSED TO WEATHER..2"
NOT EXPOSED TO WEATHER OR IN CONTACT WITH GROUND:
SLABS, WALLS, JOISTS...1"
BEAMS, COLUMNS (TIES, STIRRUPS, SPIRALS)........................1-1/2"

C) CHAIRS, SPACERS AND SAND PLATES: AS REQUIRED TO MAINTAIN CONCRETE COVER.

D) VERTICAL REINFORCEMENT: SHALL BE DOWELED TO SUPPORTING MEMBERS WITH THE SAME SIZE AND SPACING OF REINFORCEMENT AS SHOWN IN THE DRAWINGS AND GENERAL NOTES.

E) HORIZONTAL REINFORCEMENT: ALL BARS ENDING AT THE FACE OF A WALL, COLUMN OR BEAM SHALL EXTEND TO WITHIN 2" OF THE FAR FACE AND HAVE A 90 DEGREE HOOK UNLESS OTHERWISE SHOWN.

F) SPLICES (LAPS) UNO:
i) FOR BARS #6 AND SMALLER:
a) 60 DIAMETERS FOR BOTTOM BARS OF FOOTINGS AND BEAMS, SLABS LESS THAN 12" THICK, COMPOSITE TOPPING, AND SLAB-ON-GRADE REINFORCING
b) 75 DIAMETERS FOR ALL OTHER CONDITIONS.
ii) FOR #7 BARS AND LARGER:
a) 72 DIAMETERS FOR BOTTOM BARS OF FOOTINGS AND BEAMS, SLABS LESS THAN 12" THICK, AND SLAB-ON-GRADE REINFORCING
b) 94 DIAMETERS FOR ALL OTHER CONDITIONS.
iii) IN NO CASE SHALL LAPS BE LESS THAN 24 INCHES LONG.
iv) STAGGER CONTINUOUS FOOTING BOTTOM SPLICES AT LEAST 6'-0" FROM SPLICES IN OTHER BOTTOM REINFORCEMENT; STAGGER SPLICES FOR TOP REINFORCEMENT SIMILARLY.
v) INDIVIDUAL SPLICES OF BARS IN A BUNDLE SHALL BE STAGGERED AT LEAST 87 EQUIVALENT BAR DIAMETERS FOR BOTTOM BUNDLES AND 113 EQUIVALENT BAR DIAMETERS FOR TOP BUNDLES, WHERE THE EQUIVALENT DIAMETER IS BASED UPON THE COMBINED AREAS OF THE BARS BUNDLED. LAP LENGTHS FOR BARS IN BUNDLES OF 4 OR MORE BARS SHALL BE INCREASED AN ADDITIONAL 11 PERCENT.
vi) EPOXY COATED BARS SHALL HAVE THEIR LAP LENGTHS 50% GREATER THAN THOSE SPECIFIED ABOVE.
vii) WHERE CLASS "A" LAP SPLICES ARE NOTED ON THESE DRAWINGS, THE LAP SPLICES NOTED ABOVE MAY BE REDUCED BY A FACTOR OF 0.77.

G) SPACING: CLEAR DISTANCE BETWEEN PARALLEL REINFORCEMENT OR PARALLEL REINFORCING BARS BUNDLED IN CONTACT TO ACT AS A UNIT IN A LAYER SHALL NOT BE LESS THAN 1-1/2 TIMES THE NOMINAL DIAMETER OF THE REINFORCEMENT, OR 1-1/3 TIMES MAXIMUM SIZE AGGREGATE, NOR LESS THAN 1-1/2". NOMINAL DIAMETER FOR A UNIT OF BUNDLED BARS SHALL BE THE EQUIVALENT DIAMETER OF THE COMBINED AREAS OF THE BARS BUNDLED.

H) TACK WELDING, WELDING, HEATING OR CUTTING OF BARS: NOT PERMITTED UON.

I) SLAB CORNERS: PROVIDE 2-#4 X 4'-0" AT RE-ENTRANT CORNERS AND EACH CORNER OF RECTANGULAR HOLES IN SLABS. PLACE BARS DIAGONALLY.

J) ALL REINFORCING BARS SHALL BE DEFORMED BARS UNLESS OTHERWISE NOTED.

5. ANCHOR BOLTS AND DOWELS: SECURELY HELD IN PLACE PRIOR TO FOUNDATION INSPECTION BY THE CONTRACTING OFFICER AND OBSERVATION BY THE CONTRACTOR'S CQC.

6. PIPES, SLEEVES AND DUCTS: NOT TO BE PLACED IN WALLS, BEAMS, SLABS, FOOTINGS OR COLUMNS UNLESS SPECIFICALLY DETAILED.

7. CHAMFER: 3/4 INCH ON EXPOSED CORNERS.

8. ADMIXTURES: NO CALCIUM CHLORIDE.

9. CONSTRUCTION JOINTS: HEAVY SANDBLAST (1/4 INCH AMPLITUDE MINIMUM). LOCATION OF JOINTS TO BE REVIEWED BY THE CONTRACTING OFFICER. WAIT 48 HOURS BETWEEN POURS.

10. SLAB-ON-GRADE JOINTS: LOCATION OF ALL CONSTRUCTION, CONTROL AND WEAKENED PLANE JOINTS NOT SPECIFICALLY INDICATED ON THE DRAWINGS SHALL BE REVIEWED BY THE CONTRACTING OFFICER PRIOR TO THE PLACING OF REINFORCEMENT.

11. ACTUAL DIMENSIONS: SLAB, WALL, BEAM AND COLUMN DIMENSIONS SHOWN ARE ACTUAL DIMENSIONS NOT NOMINAL DIMENSIONS (i.e. A 4 INCH SLAB IS 4 INCHES THICK, NOT 3-1/2 INCHES.)

12. CONCRETE CURING: SEE SPECIFICATIONS.

13. CONCRETE TO RECEIVE MASONRY:
A) LEVEL AND LOCATED AT THE PROPER ELEVATION. DOWELS FOR MASONRY ARE TO BE FIELD CHECKED BY THE MASONRY CONTRACTOR BEFORE PLACEMENT OF CONCRETE.

B) ROUGHEN: ROUGHEN CONCRETE TO A FULL AMPLITUDE OF 1/4 INCH WHERE CONCRETE ABUTS MASONRY SUCH AS AT STARTER COURSES AND WALL INTERSECTIONS.

14. FOUNDATIONS TO RECEIVE CONCRETE OR MASONRY WALLS:
A) ABRASIVELY CLEAN AND ROUGHEN TOPS OF FOOTINGS.

B) PROVIDE 1-1/2" X 3-1/2" X 1'-0" LONG KEYS AT 24" ON CENTER AT CENTERLINE OF ALL WALLS UON.

15. BOLTS IN CONCRETE: MINIMUM EMBEDMENT SHALL BE PER IBC TABLE 1912.2, BUT NOT LESS THAN 7-INCHES UNLESS OTHERWISE NOTED.

REGISTERED PROFESSIONAL ENGINEER CHRISTOPHER W. KAMP No. 2794 Exp. 3-31-12 STRUCTURAL STATE OF CALIFORNIA

SDSE Structural Engineers

DEVELOPMENT ONE, INC.
1611 East Fourth Street, Suite 250
Santa Ana, California 92701
J. Bruce Camino, Architect, AIA, NCARB
(714) 689-0298
(714) 648-0197 FAX

DATE	SYM	REVISION	BY	A'PD

NATIONAL AERONAUTICS AND SPACE ADMINISTRATION

DRYDEN FLIGHT RESEARCH CENTER
EDWARDS, CA

DRAWING TITLE
GENERAL NOTES

PROJECT TITLE
FACILITIES SUPPORT CENTER BUILDING
100% FINAL DESIGN SUBMITTAL

APPROVALS	DATE
Cheif, Facilities Engineering & Asset Mgmt. Office DAN CROWLEY	4/14/11
Project Requestor /Customer DAN CROWLEY	4/14/11
Facilities Project Manager GEMMA FLORES	4/14/11
Chief, Office of Protective Services JOHN ZELLMER	14/4/11
Chief - Safety, Health, and Environmental Office DAN MULLEN	4/14/11
DFRC Chief Information Officer KEN NORLIN	4/14/11

DATE STRTD	11/04/10	DATE PRNTD	03/14/11
DRAWN BY		EDM-1703	
SCALE	AS NOTED	TRADE SH. No. S1.0	
FILE NAME		SHEET No. 89 of 193	

EXPANSION CONCRETE ANCHORS

1. MATERIALS:
HILTI ANCHORS ..... ICC ESR 1917 KWIK BOLT-TZ
NUTS .... ASTM A-563 HEX, GRADE A
CONCRETE (MIN) .... F'c = 2,500 PSI STONE AGGREGATE

2. INSTALLATION:
A) CARBIDE-TIPPED DRILL BITS COMPLYING WITH ANSI B212-15-1994. DRILL BIT SIZE IS ANCHOR DIAMETER.

B) HOLES CLEANED OF DUST AND DEBRIS. HOLE DEPTH TO EXCEED EMBEDMENT DEPTH BY TWO ANCHOR DIAMETERS.

C) INSTALLATION:

DIA (IN)	ANCHOR TORQUE (FT LB)	MIN EFFECTIVE EMBED (IN)	MIN EDGE EDGE (IN)	MIN SPACING (IN)	MIN CONCRETE THICKNESS (IN)
3/8	25	2	4-3/8	4-1/2	4
1/2	40	3-1/4	7-1/2	6	6
5/8	60	4	8-7/8	7-1/2	6
3/4	110	4-3/4	10	9	8

3. DO NOT INSTALL IN CONCRETE THAT IS LESS THAN 7 DAYS OLD.

4. PROVIDE STAINLESS STEEL 316 ANCHORS WHERE ANCHORS ARE USED IN EXTERIOR CONDITIONS.

5. SPECIAL INSPECTION REQUIRED.

CONCRETE - EPOXY ANCHORED THREADED RODS (SPECIAL INSPECTION REQUIRED)

1. MATERIALS:
EPOXY ADHESIVE .... PROPRIETARY, ICC ES APPROVED
CONCRETE (MIN) .... F'c = 2,500 PSI STONE AGGREGATE
THREADED RODS .... ASTM A-193 TYPICAL GRADE B7
NUTS .... ASTM A-194 HEX, GRADE A

2. INSTALLATION:
A) CARBIDE-TIPPED DRILL BITS ANSI B212.15-1994.

B) HOLES CLEANED OF DUST AND DEBRIS WITH A NYLON BRUSH AND A JET OF COMPRESSED AIR.

C) INSTALLATION:

ROD DIA (IN)	BIT DIA (IN)	MIN EMBED (IN)	MIN EDGE DIST (IN)	MIN SPACING (IN)	TIGHTENING TORQUE (FT LBS)
3/8	7/16	3-3/8	3	6	15
1/2	9/16	4-1/2	3	6	30
5/8	3/4	5-5/8	3-3/4	7-1/2	60
3/4	7/8	6-3/4	4-1/2	9	100
7/8	1	7-7/8	5-1/4	10-1/2	125
1	1-1/8	9	6	12	150
1-1/4	1-3/8	11-1/4	7-1/2	15	200

3. EPOXY SHALL BE FULLY CURED BEFORE APPLICATION OF TORQUE LOAD (MIN. 72 HOURS AT 42 DEGREES FAHRENHEIT).

4. SPECIAL INSPECTION: INSPECTION SHALL BE BY AN ICC CERTIFIED CONCRETE INSPECTOR OR THE CONTRACTOR'S CQC AS DIRECTED BY THE CONTRACTING OFFICER. INSPECT HOLE DIAMETER, HOLE DEPTH, CLEAN OUT, MIXING AND PLACING OF EPOXY, ROD SIZE, EMBEDMENT, AND TORQUE TEST.

4. DO NOT INSTALL IN CONCRETE THAT IS LESS THAN 7 DAYS OLD.

5. PROVIDE HOT-DIPPED GALVANIZED THREADED RODS AND NUTS COMPLYING WITH ASTM A-153 CLASS C OR D FOR EXTERIOR CONDITIONS.

CONCRETE-EPOXY ANCHORED REINFORCEMENT (SPECIAL INSPECTION REQUIRED):

1. MATERIALS:
EPOXY ADHESIVE .... PROPRIETARY, ICC ES APPROVED
CONCRETE (MIN) .... F'c = 2,500 PSI STONE AGGREGATE
REINFORCEMENT .... ASTM A615 GRADE 60

2. INSTALLATION:
A) CARBIDE-TIPPED DRILL BITS ANSI B212.15-1994.

B) HOLES CLEANED OF DUST AND DEBRIS WITH A NYLON BRUSH AND A JET OF COMPRESSED AIR.

C) INSTALLATION AND TENSION TEST LOADS:

BAR DIA (IN)	BIT DIA (IN)	MIN EMBED (IN)	MIN EDGE DIST (IN)	MIN SPACING (IN)	TENSION TEST LOAD (LBS)
#3	1/2	7	6	6	1,000
#4	5/8	10	6	6	1,900
#5	3/4	12-1/2	7-1/2	7-1/2	4,250
#6	7/8	15	9	9	5,650
#7	1	17-1/2	10-1/2	10-1/2	5,100
#8	1-1/8	20	12	12	6,100

3. WHERE EPOXY ANCHORED REBARS ARE USED AS SHEAR DOWELS ACROSS COLD JOINTS IN SLAB-ON-GRADE, TESTING OF THOSE DOWELS ARE NOT REQUIRED, AND MINIMUM EDGE DISTANCE CAN BE REDUCED TO 2 INCHES.

4. SPECIAL INSPECTION: INSPECTION SHALL BE BY AN ICC CERTIFIED CONCRETE INSPECTOR OR THE CONTRACTOR'S CQC AS DIRECTED BY THE CONTRACTING OFFICER. INSPECT HOLE DIAMETER, HOLE DEPTH, CLEAN OUT, MIXING AND PLACING OF EPOXY, BAR SIZE, EMBEDMENT, AND APPLICATION OF TENSION PULL TEST LOAD.

5. DO NOT INSTALL IN CONCRETE THAT IS LESS THAN 7 DAYS OLD.

6. EPOXY SHALL BE FULLY CURED BEFORE APPLICATION OF TENSION TEST LOAD (MIN. 72 HOURS AT 42 DEGREES FAHRENHEIT).

7. MINIMUM MEMBER THICKNESS TO RECEIVE REBAR SHALL BE NO LESS THAN 1.37 TIMES THE REBAR EMBEDMENT DEPTH.

8. REBAR SHALL BE INSTALLED IN HAMMER DRILLED HOLES.

9. EPOXY ANCHORED REBAR SHALL BE USED IN NON-SEISMIC, NON-TENSION APPLICATIONS ONLY WHERE SPECIFICALLY DETAILED ON THE STRUCTURAL DRAWINGS.

REINFORCED HOLLOW UNIT MASONRY (IBC CHAPTER 21)

1. MATERIALS: (F'm = 1,500 PSI)
CONCRETE BLOCK............................ GRADE N, LOAD BEARING,1,900 PSI BLOCK, MEDIUM WEIGHT 105-125 PCF), OPEN ENDED, WITH BOND BEAM UNITS AT HORIZONTAL REINFORCING, DRY UNITS, YARD CURED 28 DAYS. ASTM C-90)
MORTAR (IBC TABLE 2105.2.2.1.2).......................... TYPE S, 1,500 PSI MIN AT 28 DAYS (DO NOT USE MASONRY CEMENT)
GROUT (ASTM C476 AND C1019)..... 2,000 PSI AT 28 DAYS OR EQUIVALENT TO TO BLOCK STRENGTH WHICHEVER IS GREATER WITH SIKA GROUT AID, 8-10 INCH SLUMP
REINFORCEMENT (ASTM A-615)...... GRADE 60 TYPICAL
ANCHOR BOLTS (ASTM A-307)......... HEADED MACHINE BOLTS
EXPANSION ANCHORS.................... ICC ES APPROVED FOR GROUT FILLED CONCRETE MASONRY

2. BLOCK LAYUP: RUNNING BOND, CONCAVE COMPRESSED JOINTS, INVERTED BOND BEAM UNITS FOR STARTING COURSES.

3. REINFORCEMENT:
A) VERTICAL: ONE PIECE, NO SPLICES, CENTERED IN THE WALL UNLESS SPECIFICALLY DETAILED OTHERWISE. VERTICAL SUPPORT SPACERS 200 REINFORCEMENT DIAMETERS MAXIMUM. DOWEL REINFORCEMENT TO SUPPORTING MEMBERS WITH SAME SIZE AND SPACING OF REINFORCEMENT AS SHOWN ON THE DRAWINGS.

B) SPLICES (LAPS):
i) #6 AND SMALLER BARS: 60 BAR DIAMETERS OR 24 INCHES, WHICHEVER IS GREATER.
ii) #7 AND LARGER BARS: 72 BAR DIAMETERS.
iii) WHEN ADJACENT SPLICES ARE SEPARATED BY 3-INCHES OR LESS, THE REQUIRED LAP SHALL HAVE LAP LENGTHS 30% GREATER THAN THOSE SPECIFIED ABOVE.
iv) EPOXY COATED BARS SHALL HAVE THEIR LAP LENGTHS 50% GREATER THAN THOSE SPECIFIED ABOVE.

C) ALL REINFORCING BARS SHALL BE DEFORMED BARS UNLESS OTHERWISE NOTED.

4. GROUTING:
A) ALL CELLS AND SPACES FILLED WITH GROUT.

B) CONSOLIDATED: AT TIME OF PLACEMENT BY MECHANICAL VIBRATION AND THEN RECONSOLIDATED BEFORE PLASTICITY IS LOST.

C) POURS OVER 5 FEET: PROVIDE CLEANOUTS IN BOTTOM COURSE AT VERTICAL REINFORCEMENT (32 INCHES MAX). SPECIAL INSPECTION REQUIRED.

D) HORIZONTAL CONSTRUCTION JOINTS: FORMED BY STOPPING THE GROUT POUR NOT LESS THAN 1/2 INCH BELOW THE TOP OF THE UPPERMOST UNIT GROUTED. HORIZONTAL REINFORCING SHALL BE FULLY EMBEDDED IN GROUT.

E) GROUT SHALL BE PLACED IN A CONTINUOUS POUR IN GROUT LIFTS NOT EXCEEDING 6 FEET.

5. ADMIXTURES SHALL NOT INCLUDE CALCIUM CHLORIDE AND IF MORE THAN ONE ADMIXTURE IS USED IN THE SAME GROUT MIX, THEY SHALL BE CHEMICALLY AND PROPORTIONALLY COMPATIBLE.

6. MASONRY CONTROL JOINTS: MASONRY CONTROL JOINTS SHALL BE AS SHOWN ON THE DRAWINGS AND AT A MINIMUM BE PLACED AS FOLLOWS:
A) MASONRY CONTROL JOINTS (MCJ) SHALL BE SPACED AT A MAXIMUM 25 FEET ON-CENTER OR TWICE THE FLOOR TO FLOOR WALL HEIGHT, WHICHEVER IS LESS.

B) LOCATE MASONRY CONTROL JOINTS A MAXIMUM OF ONE-HALF THE MAXIMUM ON-CENTER SPACING FROM WALL CORNERS AND INTERSECTIONS.

C) MASONRY CONTROL JOINTS SHALL BE LOCATED AT CHANGES IN WALL THICKNESS, EXCEPT AT PILASTERS.

D) WHERE MASONRY CONTROL JOINTS ARE LOCATED AT DOORS AND WINDOWS, LOCATE THE MASONRY CONTROL JOINT OVER THE CENTERLINE OF THE DOOR OR WINDOW OPENING.

E) TERMINATE 50 PERCENT OF WALL HORIZONTAL STEEL AT MASONRY CONTROL JOINTS, EXCEPT CHORD AND LINTEL BARS SHALL BE CONTINUOUS THROUGH CONTROL JOINTS.

STRUCTURAL STEEL (IBC CHAPTER 22)

1. CODES: AISC SPECIFICATION FOR THE DESIGN, FABRICATION AND ERECTION FOR STRUCTURAL STEEL FOR BUILDINGS; MANUAL OF STEEL CONSTRUCTION (13TH EDITION); STRUCTURAL WELDING CODES AWS D1.1 AND AWS D1.4.

2. IDENTIFICATION: ROLLED STRUCTURAL STEEL SHAPES SHALL BE IDENTIFIED WITH MILL IDENTIFICATION MARKS IN CONFORMANCE WITH ASTM A6-96. PIPES SHALL BE IDENTIFIED WITH MILL IDENTIFICATION IN ACCORDANCE WITH ASTM A-53 AND TUBE SHAPES IN ACCORDANCE WITH ASTM A-500.

3. MATERIALS:
STRUCTURAL SHAPES
WIDE FLANGE...................... ASTM A-992 GRADE 50
CHANNELS........................... ASTM A-36 GRADE 36
ANGLES, PLATES AND RODS......... ASTM A-36 GRADE 36
HSS SHAPES (TUBE COLUMNS)...... ASTM A-500 GRADE B
PIPE COLUMNS................................ ASTM A-53 TYPE E OR S, GRADE B
MACHINE BOLTS............................. ASTM A-307
NUTS.................................... ASTM A-563 HEX, GRADE A
HIGH STRENGTH BOLTS................. ASTM A-325
NUTS.................................... ASTM A-563 HEAVY HEX, GRADE C
NON-SHRINK GROUT...................... ASTM C-1107 7,000 PSI(NON-METALLIC)

4. HEADED AND THREADED ANCHORS: NELSON SELF FLUXED ANCHORS.

5. WELDING: ALL WELDING SHALL BE IN CONFORMANCE WITH AWS D1.1-98.
A) ELECTRODES...................... CLASS E70 XX SERIES, LOW HYDROGEN, NOTCH TOUGHNESS OF 20 FT/LBS AT MINUS 20 DEGREES FAHRENHEIT.

B) WELDERS............................ CERTIFIED.

C) GROOVE AND BUTT WELDS COMPLETE PENETRATION (CP) UON.

D) FILLET WELDS.................... SIZES SPECIFIED ARE MINIMUM STRUCTURAL WELDS. INCREASE AS REQUIRED BY AISC SPECIFICATION TABLE J2.4.

E) FIELD WELDING.................. MAY BE REQUIRED TO FACILITATE CONSTRUCTION.

F) TERMINATION...................... WELDS TERMINATING AT ENDS OR SIDES, WHEREVER PRACTICABLE, SHALL BE RETURNED CONTINUOUSLY AROUND CORNERS A DISTANCE 2 TIMES THE NOMINAL SIZE OF THE WELD PER AISC SPECIFICATION SECTION J2.2B.

G) LENGTHS............................. WHERE LENGTH IS NOT SPECIFIED, IT SHALL BE THE FULL LENGTH OF THE JOINT.

6. BOLT HOLES:
TYPICAL.. DIAMETER + 1/16 INCH
ANCHOR... DIAMETER + 3/16 INCH
SLOTTED.. DIAMETER + 1/16 INCH BY 2.5 TIMES DIAMETER

7. EXPOSED STEEL: HOT DIP GALVANIZED.

8. ELEMENTS THAT ARE NOT STRUCTURAL STEEL INCLUDING STEEL DECK, CONCRETE SLABS, WALLS AND COLUMNS, MASONRY WALLS AND COLUMNS, AND ROOF ARE EMPLOYED TO INTERACT WITH THE STEEL FRAMING TO PROVIDE STABILITY AND BRACING TO THE OVERALL STRUCTURE. THE STEEL ERECTOR SHALL FURNISH AND INSTALL ALL NECESSARY TEMPORARY SUPPORTS AND BRACING REQUIRED FOR THE STABILITY OF THE STRUCTURAL STEEL FRAMING IN ACCORDANCE WITH SECTION 7.10 OF THE AISC CODE OF STANDARD PRACTICE FOR STEEL BUILDINGS AND BRIDGES. ALL TEMPORARY SUPPORTS AND BRACING SHALL NOT BE REMOVED OR MODIFIED UNTIL THE SUPPORTING STEEL DECK, CONCRETE SLABS, WALLS AND COLUMNS, MASONRY WALLS AND COLUMNS, AND ROOF ARE COMPLETELY INSTALLED AND HAVE ACHIEVED THEIR DESIGN STRENGTH.

REGISTERED PROFESSIONAL ENGINEER
CHRISTOPHER W. KAMP
No. 2794
Exp. 3-31-12
STRUCTURAL
STATE OF CALIFORNIA

SDSE
Structural Engineers

DEVELOPMENT ONE, INC.
1611 East Fourth Street, Suite 250
Santa Ana, California 92701
J. Bruce Camino, Architect, AIA, NCARB
(714) 689-0298
(714) 648-0197 FAX

DATE	SYM	REVISION	BY	A'PD

NATIONAL AERONAUTICS AND SPACE ADMINISTRATION
DRYDEN FLIGHT RESEARCH CENTER
EDWARDS, CA

DRAWING TITLE
GENERAL NOTES

PROJECT TITLE
FACILITIES SUPPORT CENTER BUILDING
100% FINAL DESIGN SUBMITTAL

APPROVALS	DATE
Cheif, Facilities Engineering & Asset Mgmt. Office DAN CROWLEY	4/14/11
Project Requestor /Customer DAN CROWLEY	4/14/11
Facilities Project Manager GEMMA FLORES	4/14/11
Chief, Office of Protective Services JOHN ZELLMER	4/14/11
Chief - Safety, Health, and Environmental Office DAN MULLEN	4/14/11
DFRC Chief Information Officer KEN NORLIN	4/14/11

DATE STRTD	11/04/10	DATE PRNTD	03/14/11
DRAWN BY		EDM-1703	
SCALE	AS NOTED	TRADE SH. No. S1.1	
FILE NAME			SHEET No. 90 of 193

METAL DECKING

1. PROVIDE METAL DECKING WITH PROPERTIES AS INDICATED ON DRAWINGS OR APPROVED EQUAL. ALL DECKS SHALL BE IN CONFORMANCE WITH ASTM A653 SS GRADE 33.

2. FLOOR DECKING:
   A) FORM FLOOR DECKING WITH INTEGRAL LOCKING LUGS OR EMBOSSMENTS TO PROVIDE MECHANICAL LOCK BETWEEN CONCRETE AND DECKING.

   B) SHEAR STUDS:
      i) PROVIDE SHEAR STUDS COMPLYING WITH ASTM A108, GRADE 1015 OR 1020. STUD SIZE AND SPACING PER PLAN.

      ii) WELD SHEAR STUDS IN COMPLIANCE WITH AWS D1.1. WELDERS SHALL BE QUALIFIED AS REQUIRED BY AWS 31.1 AND THE GOVERNING CODE AUTHORITY. FASTEN WITH AN AUTOMATIC END WELD GUN.

      iii) DO NOT LAP 18 GAUGE DECKING OR THICKER WHERE 3/4" DIAMETER SHEAR STUDS ARE TO BE ATTACHED TO SUPPORTS.

   C) DECK LAYOUT SHALL BE FOR UNSHORED CONSTRUCTION.

3. ROOF DECKING:
   A) DO NOT SUSPEND PIPING, DUCTS, WORK UTILITIES OR OTHER LOADS WITH EXCEPTION OF SUSPENDED ACOUSTICAL CEILINGS WITH INTEGRALLY SUPPORTED LIGHT FIXTURES FROM ROOF DECKING.

4. BEAR DECKING AT LEAST 2 INCHES AT SUPPORTS. LAP DECKING AT ENDS AT LEAST 2 INCHES AND CENTER LAPS OVER SUPPORTS.

5. WELD METAL DECKING IN COMPLIANCE WITH ANSI/AWS D1.3 AND IBC CHAPTER 22, USING A MINIMUM OF E60XX ELECTRODES. WELDERS SHALL BE CERTIFIED AS REQUIRED BY THE GOVERNING CODE AUTHORITY.

6. ALL STEEL DECK SHALL BE CONTINUOUS OVER AT LEAST TWO SPANS UNLESS OTHERWISE NOTED ON THE DRAWINGS.

METAL STUDS AND JOISTS

1. CODES AND FABRICATION: IBC CHAPTER 22 AND IN ACCORDANCE WITH AN APPROVED ICC ES REPORT.

2. WELDING: AWS D1.3, TYPE E-6012, E-6013 OR E-7014 ROD, SMAW PROCESS.

3. FRAMING CONNECTORS: SIMPSON STRONG-TIE, CATALOG C-CFS08 ICC APPROVED AND INSTALLED ACCORDINGLY. BEFORE USING EQUIVALENT CONNECTORS, SUBMIT LOAD COMPARISONS WITH CATALOG AND ICC REPORTS TO THE CONTRACTING OFFICER FOR REVIEW.

SPECIAL INSPECTION/INSPECTOR REQUIREMENTS (IBC 1704)
REQUIREMENTS FOR SPECIAL INSPECTION:

1. REPORTS: PREPARED BY THE INSPECTOR AND SIGNED BY A CIVIL ENGINEER. SUBMITTED TO THE GOVERNMENT, CONTRACTOR, AND THE DESIGN PROFESSIONAL DESIGNATED FOR STRUCTURAL OBSERVATION. ALL DISCREPANCIES SHALL BE BROUGHT TO THE IMMEDIATE ATTENTION OF THE CONTRACTOR FOR CORRECTION; THEN, IF NOT CORRECTED, TO THE DESIGNATED DESIGN PROFESSIONAL AND THE GOVERNMENT (IBC 1704.1.2).

2. THE SPECIAL INSPECTION IS TO BE CONTINUOUS DURING THE PERFORMANCE OF THE WORK UNLESS OTHERWISE SPECIFIED.

3. CERTIFICATION: INSPECTOR SHALL BE CERTIFIED BY THE BUILDING OFFICIAL TO PERFORM THE TYPES OF SPECIAL INSPECTIONS SPECIFIED. A CERTIFICATE OF SATISFACTORY COMPLETION OF WORK REQUIRING SPECIAL INSPECTION SHALL BE COMPLETED AND SUBMITTED TO THE GOVERNMENT.

SUMMARY OF STRUCTURAL CONTINUOUS AND PERIODIC SPECIAL INSPECTIONS

THE SPECIAL INSPECTIONS ARE IN ADDITION TO, AND INDEPENDENT FROM, THE CONTRACTOR'S CONSTRUCTION QUALITY CONTROL STAFF. SPECIFICALLY INSPECTED WORK WHICH IS INSTALLED OR COVERED WITHOUT THE APPROVAL OF THE GOVERNMENT AND THE SPECIAL INSPECTOR IS SUBJECT TO REOPENING OR EXPOSURE.

1. RESPONSIBILITY: IT IS THE RESPONSIBILITY OF THE CONTRACTOR TO INFORM THE SPECIAL INSPECTOR OR INSPECTION AGENCY AT LEAST ONE WORKING DAY PRIOR TO PERFORMING ANY WORK THAT REQUIRES SPECIAL INSPECTION.

2. SPECIAL INSPECTIONS:
   A) CONCRETE (IBC 1704.4): DURING THE TAKING OF TEST SPECIMENS AND PLACING OF REINFORCED CONCRETE (CONTINUOUS).

   B) BOLTS INSTALLED IN CONCRETE (IBC 1704.4): PRIOR TO AND DURING THE PLACEMENT OF CONCRETE AROUND BOLTS (CONTINUOUS).

   C) REINFORCING STEEL (IBC 1704.4): DURING PLACING OF REINFORCING STEEL FOR ALL CONCRETE SPECIFIED TO HAVE SPECIAL INSPECTION (PERIODIC).

   D) STRUCTURAL WELDING (IBC 1704.3.1 AND 1704.3.2), (CONTINUOUS):
      i) DURING ALL SHOP WELDING UNLESS DONE IN AN APPROVED FABRICATOR'S SHOP IN ACCORDANCE WITH AWS D1.1.
      ii) DURING ALL FIELD WELDING.
      iv) WELDING INSPECTORS ARE TO BE AWS Q.C-1CERTIFIED.
      v) INSPECTION SHALL BE PER AWS D1.1, D1.3 OR D1.4 AND INCLUDE VERIFICATION THAT THE WPS IS BEING FOLLOWED.
      vi) ALL STEEL AND WELDING MATERIALS SHALL BE IDENTIFIED AS REQUIRED BY THEIR ASTM OR AWS STANDARD.

   E) HIGH-STRENGTH BOLTING (IBC 1704.3.3): BOLT AND WASHER TYPE, SURFACE CONDITIONS, HOLE AND BOLT DIAMETER AND PERIODIC INSPECTION OF TIGHTENING (PERIODIC).

   F) STRUCTURAL MASONRY (IBC 1704.5, TABLE 1704.5.1 AND IBC 2105): VERIFICATION OF COMPLIANCE FOR F'm (PERIODIC), AT THE START OF LAYING UNITS, AFTER THE PLACEMENT OF REINFORCING STEEL, GROUT SPACE PRIOR TO EACH GROUTING OPERATION (PERIODIC) AND DURING ALL GROUTING OPERATIONS (CONTINUOUS).

   G) CONCRETE AND MASONRY ANCHORS (CONTINUOUS): FOR ALL THREADED ROD AND REINFORCING STEEL ANCHORED WITH EPOXY ADHESIVE IN CONCRETE OR MASONRY; FOR ALL EXPANSION ANCHORS IN CONCRETE OR MASONRY, WHEN INDICATED ON THE PLANS AND NOTES. INSPECTION/TESTING SHALL BE IN CONFORMANCE WITH THE ANCHOR MANUFACTURER'S ICC REPORT AND SHALL INCLUDE AS A MINIMUM VERIFICATION OF HOLE DEPTH AND DIAMETER, CLEAN OUT, ALL MATERIALS AND INSTALLATION TORQUE.

SPECIAL STRUCTURAL OBSERVATIONS BY DESIGN PROFESSIONAL (IBC 1709)

1. NOTIFICATION: 48 HOURS BEFORE OBSERVATION. DELINQUENT NOTIFICATION MAY REQUIRE DEMOLITION OF COVERING MATERIALS TO FACILITATE OBSERVATION.

2. OBSERVATIONS BY THE DESIGN PROFESSIONAL DESIGNATED FOR STRUCTURAL OBSERVATION:
   A) REINFORCEMENT BEFORE CONCRETE PLACEMENT.

   B) FIELD WELDED CONNECTIONS.

   C) COMPLETION OF ROUGH FRAMING.

3. WRITTEN STATEMENT (IBC 1709.1): THE DESIGN PROFESSIONAL RESPONSIBLE FOR THE STRUCTURAL OBSERVATION SHALL SUBMIT TO THE GOVERNMENT A WRITTEN STATEMENT THAT THE SITE VISITS HAVE BEEN MADE AND IDENTIFYING ANY REPORTED DEFICIENCIES WHICH, TO THE BEST OF THE STRUCTURAL OBSERVER'S KNOWLEDGE, HAVE NOT BEEN RESOLVED.

ABBREVIATIONS

AB	ANCHOR BOLT
ABV	ABOVE
ADDL	ADDITIONAL
ADJ	ADJACENT
ALT	ALTERNATE
ARCH	ARCHITECTURAL/ ARCHITECT
(B)	BOTTOM
BLK	BLOCK
BLKG	BLOCKING
BLW	BELOW
BM	BEAM
BN	BOUNDARY NAIL
BOF	BOTTOM OF FOOTING
BP	BASE PLATE
BRG	BEARING
BTWN	BETWEEN
C	CAMBER
CB	CARRIAGE BOLTS
CIP	CAST-IN-PLACE
CJ	CONSTRUCTION JOINT
CJ	CEILING JOIST
CL	CENTER LINE
CLR	CLEAR
COL	COLUMN
CONC	CONCRETE
CONN	CONNECTION
CONST	CONSTRUCTION
CONT	CONTINUOUS
CP	COMPLETE PENETRATION
CSK	COUNTER SINK
CTRD	CENTERED
DBL	DOUBLE
DF	DOUGLAS FIR/LARCH
DIA	DIAMETER
DIM	DIMENSION
DN	DOWN
DO	DITTO (REPEAT)
DP	DEEP
DWG	DRAWING
DWL	DOWEL
(E)	EXISTING
EA	EACH
EF	EACH FACE
EL	ELEVATION
ELEC	ELECTRICAL
ELEV	ELEVATOR
EMBED	EMBEDMENT
EN	EDGE NAIL
EQ	EQUAL OR EQUIVALENT
ES	EACH SIDE
EW	EACH WAY
EXP	EXPANSION
FDN	FOUNDATION
FF	FINISHED FLOOR
FJ	FLOOR JOIST
FLG	FLANGE
FLR	FLOOR
FN	FIELD NAIL
FO	FACE OF
FOC	FACE OF CONCRETE
FOM	FACE OF MASONRY
FOS	FACE OF STUD
FRMG	FRAMING
FS	FAR SIDE
FTG	FOOTING
GA	GAUGE
GALV	GALVANIZED
GLB	GLUED LAMINATED BEAM
GR	GRADE
(H)	HORIZONTAL
HD	HOLDOWN
HDR	HEADER
HGR	HANGER
HORIZ	HORIZONTAL
HSB	HIGH STRENGTH BOLT
HSH	HORIZONTALLY SLOTTED HOLES
HT	HEIGHT
I.F.	INSIDE FACE
JST	JOIST
JT	JOINT
LDGR	LEDGER
LOC	LOCATION
LT WT	LIGHTWEIGHT
MATL	MATERIAL
MAX	MAXIMUM
MB	MACHINE BOLT
MECH	MECHANICAL
MFR	MANUFACTURER
MIN	MINIMUM
MISC	MISCELLANEOUS
MTL	METAL
NIC	NOT IN CONTRACT
NS	NEAR SIDE
NTS	NOT TO SCALE
O.F.	OUTSIDE FACE
OH	OPPOSITE HAND
OPNG	OPENING
OPP	OPPOSITE
PC	PRECAST
PL	PLATE
PLCS	PLACES
PLYWD	PLYWOOD
PP	PARTIAL PENETRATION
PT	PRESSURE TREATED
R	RADIUS
REINF	REINFORCEMENT
REQD	REQUIRED
REF	REFERENCE
SCHED	SCHEDULE
SEP	SEPARATION
SIM	SIMILAR
SMS	SHEET METAL SCREW
SPEC	SPECIFICATION
SQ	SQUARE
STD	STANDARD
STGR	STAGGER
STIFF	STIFFENERS
STL	STEEL
STRUCT	STRUCTURAL
(T)	TOP
T&B	TOP AND BOTTOM
TG	TAPERED GIRDER
THK	THICKNESS/THICK
THRD	THREADED
TN	TOENAIL
TOC	TOP OF CONCRETE
TOM	TOP OF MASONRY
TOP	TOP OF PARAPET
TOS	TOP OF STEEL
TOW	TOP OF WALL
TS	TUBE STRUCTURAL
TSW	TOP SEAM WELD
TYP	TYPICAL
UON	UNLESS OTHERWISE NOTED
(V)	VERTICAL
VERT	VERTICAL
VSH	VERTICAL SLOTTED HOLES
W/	WITH
W/O	WITHOUT
WD	WOOD
WP	WATER PROOF/WORK POINT
WPJ	WEAKENED PLANE JOINT
WT	WEIGHT
WWF	WELDED WIRE FABRIC

CONSTRUCTION BID OPTIONS

LEGEND:

# INDICATES CONSTRUCTION BID OPTION NUMBER

SDSE Structural Engineers

DEVELOPMENT ONE, INC.
1611 East Fourth Street, Suite 250
Santa Ana, California 92701
J. Bruce Camino, Architect, AIA, NCARB
(714) 689-0298
(714) 648-0197 FAX

DATE	SYM	REVISION	BY	A'PD

NATIONAL AERONAUTICS AND SPACE ADMINISTRATION
DRYDEN FLIGHT RESEARCH CENTER
EDWARDS, CA

DRAWING TITLE
GENERAL NOTES

PROJECT TITLE
FACILITIES SUPPORT CENTER BUILDING
100% FINAL DESIGN SUBMITTAL

APPROVALS	DATE
Chief, Facilities Engineering Division (Acting) DAN CROWLEY	4/14/11
Project Requestor /Customer DAN CROWLEY	4/14/11
Facilities Project Manager GEMMA FLORES	4/14/11
Chief, Office of Protective Services JOHN ZELLMER	4/14/11
Chief - Safety, Health, and Environmental Office DAN MULLEN	4/14/11
DFRC Chief Information Officer KEN NORLIN	4/14/11

DATE STRTD	11/04/10	DATE PRNTD	03/14/11
DRAWN BY		EDM-1703	
SCALE	AS NOTED	TRADE SH. No. S1.2	
FILE NAME		SHEET No. 91 of 193	

NOTE: CONTRACTOR TO VERIFY THAT ALL BOTTOM OF FOOTINGS SHOWN MEET THESE MINIMUM REQUIREMENTS

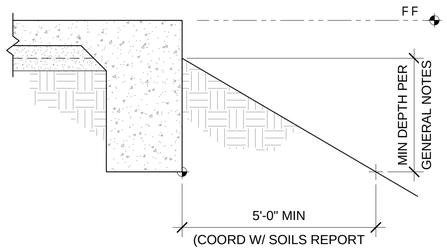

MIN DAYLIGHT REQUIREMENTS

SCALE: 1" = 1'-0" | 10 / S2.0

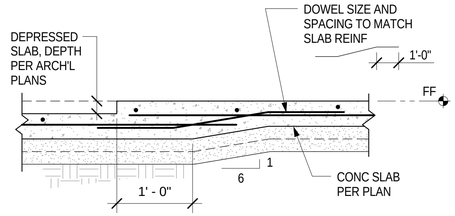

DEPRESSED SLAB

SCALE: 1" = 1'-0" | 7 / S2.0

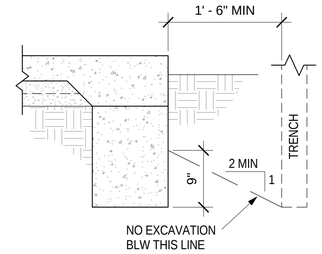

NOTES:

1. WHERE BOTTOM OF CONCRETE FILL IS MORE THAN 3'-0" BLW BOTTOM OF FTG, STEP FTG PER 4 S2.0 S2.0
2. PLACE CONC FILL AROUND SLEEVE BEFORE POURING CONT FTG. FILL SHALL BE SAME WIDTH AS CONT FTG AND FULL WIDTH OF PIPE TRENCH
3. AT MULTIPLE PIPES, THE MINIMUM CENTER-TO-CENTER SPACING SHALL BE (3) SLEEVE DIAMETERS

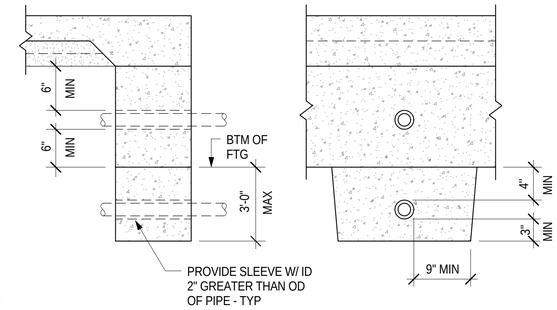

PIPING AT FOOTINGS

SCALE: 1" = 1'-0" | 3 / S2.0

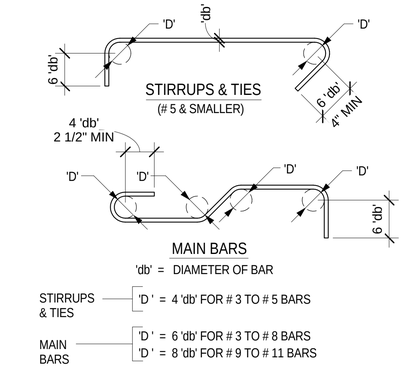

'db' = DIAMETER OF BAR

STIRRUPS & TIES — 'D' = 4 'db' FOR # 3 TO # 5 BARS

MAIN BARS — 'D' = 6 'db' FOR # 3 TO # 8 BARS; 'D' = 8 'db' FOR # 9 TO # 11 BARS

REINFORCING BAR BENDS

SCALE: 1" = 1'-0" | 1 / S2.0

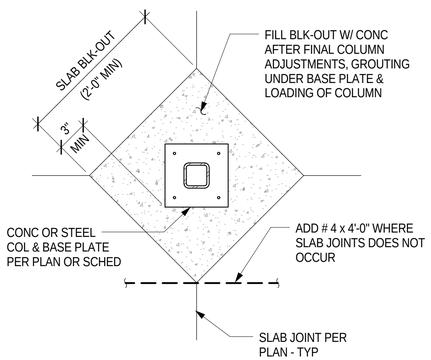

SLAB BLOCKOUT AT COLUMNS

SCALE: 1" = 1'-0" | 11 / S2.0

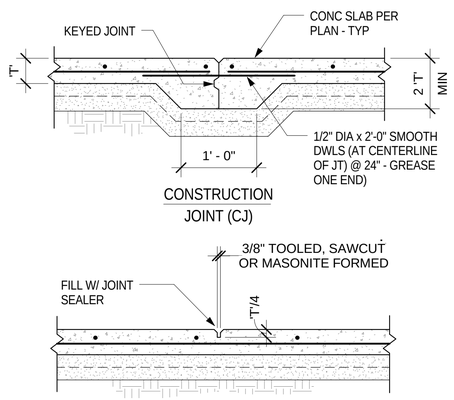

WEAKENED PLANE JOINT (WPJ)

* SAWCUT IN ACCORDANCE WITH ACI 302.1R

SLAB JOINTS

SCALE: 1" = 1'-0" | 8 / S2.0

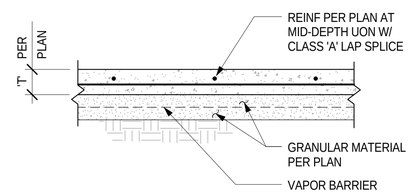

SLAB/BASE COURSE

SCALE: 1" = 1'-0" | 6 / S2.0

NOTE: REINFORCING TO MATCH SIZE AND SPACING OF FOOTING REINFORCING (TOP BARS SHOWN DASHED)

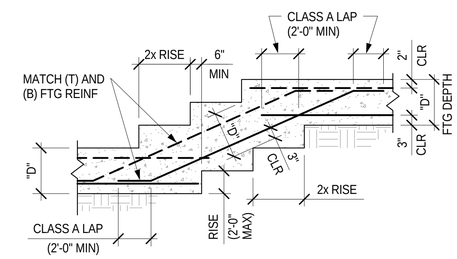

NOTE: SLOPE TO BE 1 VERT TO 2 HORIZ EXCEPT WHERE SHOWN OTHERWISE (MAX)

STEPPED WALL FOOTING

SCALE: 1" = 1'-0" | 4 / S2.0

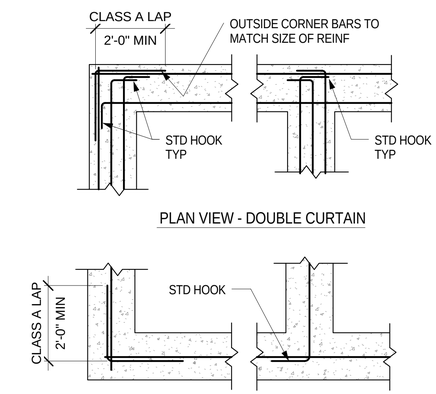

REINF AT INTERSECTIONS FTGS

SCALE: 1" = 1'-0" | 2 / S2.0

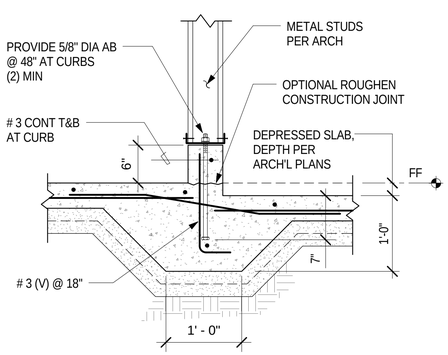

CURB AT METAL STUD WALL

SCALE: 1" = 1'-0" | 12 / S2.0

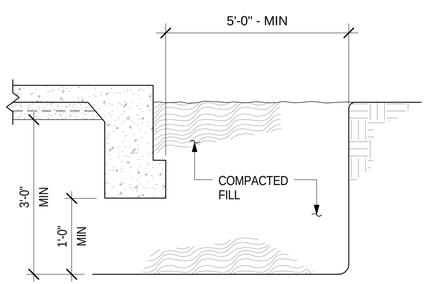

RECOMPACTION ZONE

SCALE: 1" = 1'-0" | 9 / S2.0

REGISTERED PROFESSIONAL ENGINEER CHRISTOPHER M. TRUMP C 42794 Exp. 3-31-12 STRUCTURAL STATE OF CALIFORNIA

SDSE Structural Engineers

DEVELOPMENT ONE, INC.
1611 East Fourth Street, Suite 250
Santa Ana, California 92701
J. Bruce Camino, Architect, AIA, NCARB
(714) 689-0298
(714) 648-0197 FAX

DATE	SYM	REVISION	BY	A'PD

NATIONAL AERONAUTICS AND SPACE ADMINISTRATION

DRYDEN FLIGHT RESEARCH CENTER
EDWARDS, CA

DRAWING TITLE: TYPICAL DETAILS

PROJECT TITLE: FACILITIES SUPPORT CENTER BUILDING
100% FINAL DESIGN SUBMITTAL

APPROVALS	DATE
Chief, Facilities Engineering Division, Project Office — DAN CROWLEY	4/14/11
Project Requestor /Customer — DAN CROWLEY	4/14/11
Facilities Project Manager — GEMMA FLORES	4/14/11
Chief, Office of Protective Services — JOHN ZELLMER	4/14/11
Chief - Safety, Health, and Environmental Office — DAN MULLEN	4/14/11
DFRC Chief Information Officer — KEN NORLIN	4/14/11

DATE STRTD	11/04/10	DATE PRNTD	03/14/11
DRAWN BY		EDM-1703	
SCALE	AS NOTED	TRADE SH. No.	S2.0
FILE NAME		SHEET No. 92 of 193	

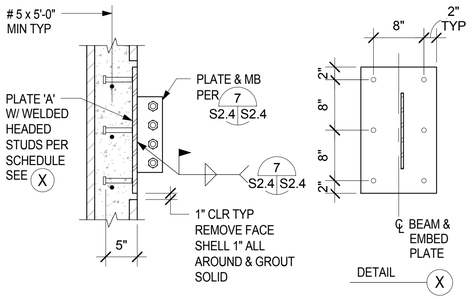

PLATE & STUD ANCHOR SCHEDULE		
BM SIZE	PLATE 'A'	STUD ANCHORS
W 8, 10	PLATE 3/4x12x1'-0"	(4) 3/4" DIA
W 12, 14, 16	PLATE 3/4x12x1'-8"	(6) 3/4" DIA

CAST MASONRY ANCHOR BOLTS

SCALE: 1" = 1'-0" | 10 / S2.1

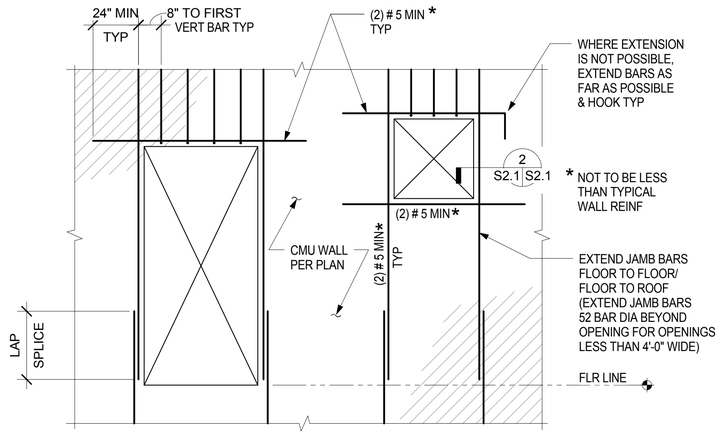

PARTIAL WALL ELEVATION

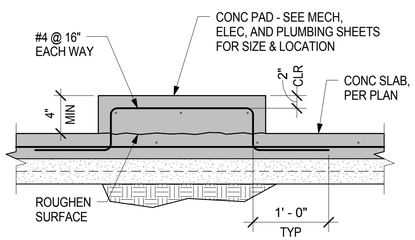

TYP HOUSEKEEPING PAD1

SCALE: 1" = 1'-0" | 11 / S2.1

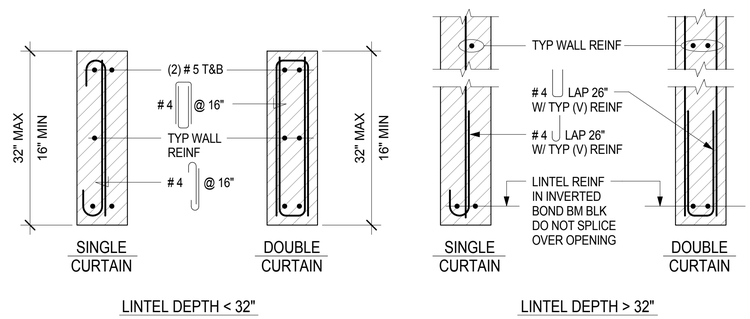

MIN REINF AT MASONRY WALL OPENINGS < 6'-8" WIDE

SCALE: 1" = 1'-0" | 6 / S2.1

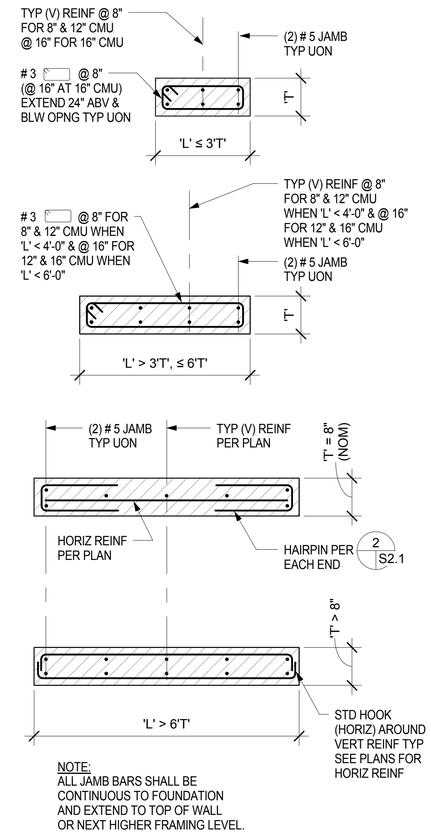

NOTE:
ALL JAMB BARS SHALL BE CONTINUOUS TO FOUNDATION AND EXTEND TO TOP OF WALL OR NEXT HIGHER FRAMING LEVEL.

PLAN VIEWS

MASONRY WALL/PIER REINF

SCALE: 1" = 1'-0" | 4 / S2.1

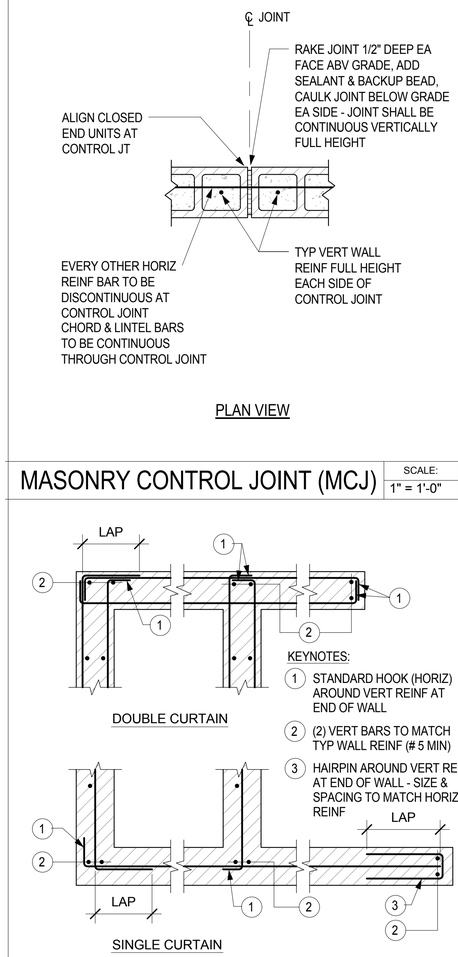

PLAN VIEW

MASONRY CONTROL JOINT (MCJ)

SCALE: 1" = 1'-0" | 1 / S2.1

KEYNOTES:

1. STANDARD HOOK (HORIZ) AROUND VERT REINF AT END OF WALL
2. (2) VERT BARS TO MATCH TYP WALL REINF (# 5 MIN)
3. HAIRPIN AROUND VERT REINF AT END OF WALL - SIZE & SPACING TO MATCH HORIZ REINF

INTERSECTIONS OF CMU WALLS

SCALE: 1" = 1'-0" | 2 / S2.1

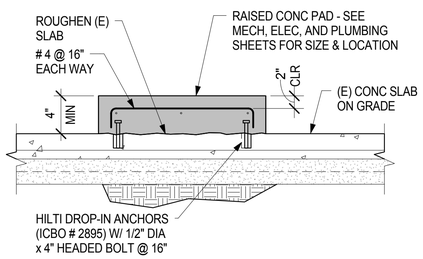

HOUSEKEEPING PAD

SCALE: 1" = 1'-0" | 12 / S2.1

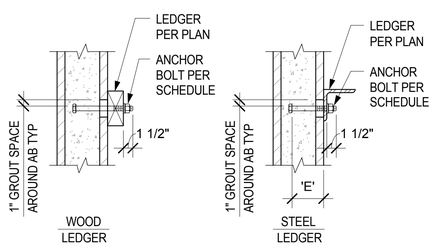

HEADED ANCHOR BOLT	EMBED 'E' MIN		
	8" BLK	10" BLK	12" BLK
1/2" DIA	5"	7"	7"
5/8" DIA	5"	7"	7"
3/4" DIA	5"	7"	7"
7/8" DIA	-	-	8"

CAST ANCHOR BOLTS - LEDGER

SCALE: 1" = 1'-0" | 9 / S2.1

REGISTERED PROFESSIONAL ENGINEER CHRISTOPHER M. WEBB C 42794 Exp. 3-31-12 STRUCTURAL STATE OF CALIFORNIA

SDSE Structural Engineers

DEVELOPMENT ONE, INC.
1611 East Fourth Street, Suite 250
Santa Ana, California 92701
J. Bruce Camino, Architect, AIA, NCARB
(714) 689-0298
(714) 648-0197 FAX

DATE	SYM	REVISION	BY	A'PD

NATIONAL AERONAUTICS AND SPACE ADMINISTRATION
DRYDEN FLIGHT RESEARCH CENTER
EDWARDS, CA

DRAWING TITLE
TYPICAL DETAILS

PROJECT TITLE
FACILITIES SUPPORT CENTER BUILDING
100% FINAL DESIGN SUBMITTAL

APPROVALS	DATE
Chief, Facilities Engineering Division/Asset Mgmt Office DAN CROWLEY	4/14/11
Project Requestor /Customer DAN CROWLEY	4/14/11
Facilities Project Manager GEMMA FLORES	4/14/11
Chief, Office of Protective Services JOHN ZELLMER	4/14/11
Chief - Safety, Health, and Environmental Office DAN MULLEN	4/14/11
DFRC Chief Information Officer KEN NORLIN	4/14/11

DATE STRTD	11/04/10	DATE PRNTD	03/14/11
DRAWN BY		EDM-1703	
SCALE	AS NOTED	TRADE SH. No. S2.1	
FILE NAME		SHEET No. 93 of 193	

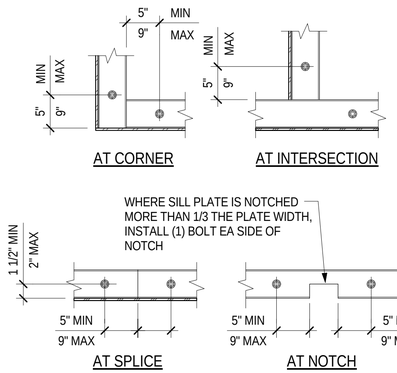

SILL PLATE BOLTING

SCALE: 3/4" = 1'-0" | 10 / S2.2

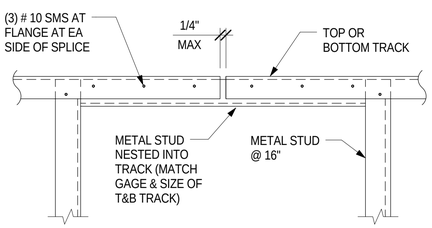

TRACK SPLICE

SCALE: 1" = 1'-0" | 11 / S2.2

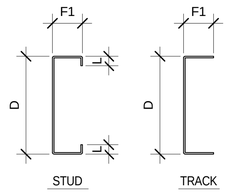

METAL STUD NOTES:

1. ALL SECTIONS SHALL BE MANUFACTURED IN ACCORDANCE WITH THE LATEST AISI SPECIFICATION AND ER #4943P.
2. BENT, KINKED, DISTORTED OR DAMAGED SECTIONS SHALL NOT BE USED.
3. STUDS MAY HAVE 1 1/2" x 4" WEB CUT-OUTS @ 24". CUT-OUTS SHALL NOT BE CLOSER THAN 12" FROM SECTION ENDS UON.
4. BOX HEADER AND JAMB STUDS SHALL BE UNPUNCHED, WORK WITH 2 / S2.3 S2.3
5. SECTION PROPERTIES ARE BASED UPON THE "STEEL STUD MANUFACTURER'S ASSOCIATION" (SSMA) CATALOG OF PRODUCERS.
6. USE: 400S162-43 @ 16" UON WHERE 4" STUDS ARE SPECIFIED
   USE: 400T125-43 WHERE 4" TRACKS ARE SPECIFIED UON
   USE: 600S162-43 @ 16" UON WHERE 6" STUDS ARE SPECIFIED
   USE: 600T125-43 WHERE 6" TRACKS ARE SPECIFIED UON
   USE: 800S162-43 @ 16" UON WHERE 8" STUDS ARE SPECIFIED
   USE: 800T125-43 WHERE 8" TRACKS ARE SPECIFIED UON

FASTENER NOTES:

1. FASTENERS SHALL BE HILTI BRAND AS MANUFACTURED BY HILTI, INC. OR APPROVED EQUAL.

	MARK	GA	DESIGN THK	DIMENSIONS IN INCHES			EFFECTIVE SECTION PROPERTIES		Fy (ksi)
				L	D	F1	Ix in 4	S in 3	
METAL STUDS	400S125-33	20	0.0346	0.188"	6.000"	1.250"	0.523	0.231	33
	600S125-33	20	0.0346	0.188"	6.000"	1.250"	1.391	0.408	33
	250S137-33	20	0.0346	0.375"	2.500"	1.375"	0.203	0.156	33
	362S137-33	20	0.0346	0.375"	3.625"	1.375"	0.479	0.254	33
	600S137-33	20	0.0346	0.375"	6.000"	1.375"	1.582	0.510	33
	400S162-43	18	0.0451	0.350"	4.000"	1.625"	0.892	0.443	33
	400S162-68	14	0.0713	0.350"	4.000"	1.625"	1.346	0.666	50
	600S162-33	20	0.0346	0.350"	6.000"	1.625"	1.793	0.598	33
	600S162-43	18	0.0451	0.350"	6.000"	1.625"	2.316	0.767	33
	600S162-54	16	0.0566	0.350"	6.000"	1.625"	2.860	0.927	50
	600S162-68	14	0.0713	0.350"	6.000"	1.625"	3.525	1.164	50
	600S137-68	14	0.0713	0.375"	6.000"	1.375"	3.094	1.029	50
	800S162-43	18	0.0451	0.350"	8.000"	1.625"	5.736	1.434	33
	1000S200-54	16	0.0566	0.625"	10.000"	2.000"	11.278	1.805	50
TRACKS	250T125-33	20	0.0346	-	2.50"	1.250"	0.166	0.103	33
	362T125-33	20	0.0346	-	3.625"	1.250"	0.384	0.174	33
	600T125-33	20	0.0346	-	6.0"	1.250"	1.297	0.335	33
	400T125-43	18	0.0451	-	4.0"	1.250"	0.666	0.282	33
	600T125-43	18	0.0451	-	6.0"	1.250"	1.750	0.515	33
	600T125-54	16	0.0566"	-	6.0"	1.250"	2.221	0.653	50
	800T125-43	18	0.0451	-	8.0"	1.250"	3.600	0.739	33

METAL TO METAL FASTENER SIZE (UON)	
METAL THICKNESS 'T'	SCREW TYPE
T < 12 GA	# 10 HWH W/ # 2 POINT
12 GA < T < 1/8"	1/4-14 W/ # 3 POINT 1/8-1/4 # 12-24 HWH # 4 POINT
1/4" < T < 1/2"	#12-24 HWH # 5 POINT
METAL TO WOOD FASTENER SIZE	
METAL THICHNESS 'T'	SCREW TYPE
T < 12 GA	# 10 PFH W/ # 3 POINT

METAL STUD PROPERTIES

SCALE: 1" = 1'-0" | 6 / S2.2

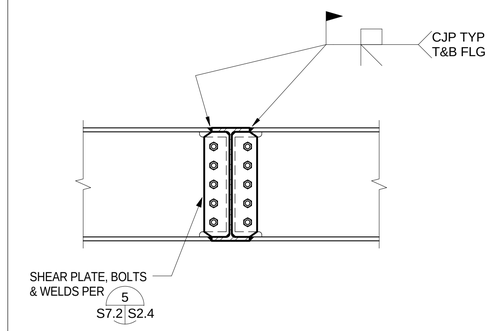

BEAM TO BEAM MOMENT CONN

SCALE: 1" = 1'-0" | 1 / S2.2

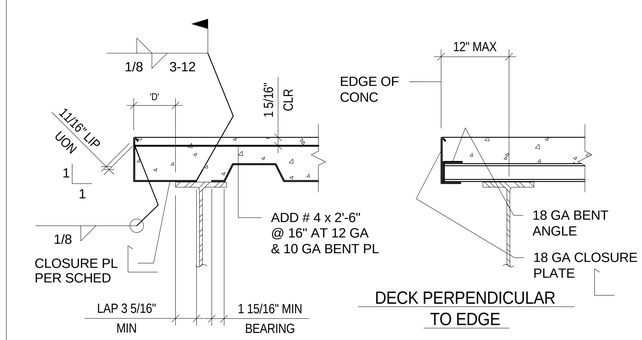

CLOSURE %%131 SCHEDULE
'D' LESS THAN 3" = 16 GA BENT PL
'D' LESS THAN 5" = 14 GA BENT PL
'D' LESS THAN 7" = 12 GA BENT PL W/O LIP
'D' LESS THAN 9" = 10 GA BENT PL W/O LIP

FLOOR EDGE AT COMP DECK

SCALE: 1" = 1'-0" | 2 / S2.2

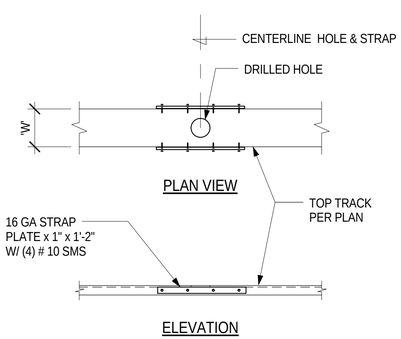

NOTES:

1. MAXIMUM HOLE DIAMETER = 1/2 THE TRACK WIDTH ('W').
2. SPACE MULTIPLE HOLES MINIMUM 7 DIAMETER APART.

HOLES THRU TOP TRACK

SCALE: 1" = 1'-0" | 12 / S2.2

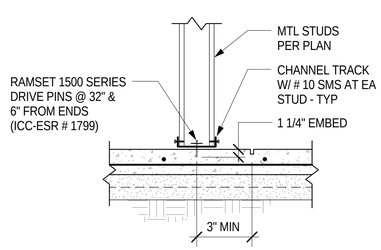

NON-BRG/NON-SHEAR WALL

SCALE: 1" = 1'-0" | 9 / S2.2

SDSE Structural Engineers

DEVELOPMENT ONE, INC.
1611 East Fourth Street, Suite 250
Santa Ana, California 92701
J. Bruce Camino, Architect, AIA, NCARB
(714) 689-0298
(714) 648-0197 FAX

DATE	SYM	REVISION	BY	A'PD

NATIONAL AERONAUTICS AND SPACE ADMINISTRATION
DRYDEN FLIGHT RESEARCH CENTER
EDWARDS, CA

DRAWING TITLE: TYPICAL DETAILS

PROJECT TITLE: FACILITIES SUPPORT CENTER BUILDING 100% FINAL DESIGN SUBMITTAL

APPROVALS	DATE
Chief, Facilities Engineering Assoc. Office DAN CROWLEY	4/14/11
Project Requestor /Customer DAN CROWLEY	4/14/11
Facilities Project Manager GEMMA FLORES	4/14/11
Chief, Office of Protective Services JOHN ZELLMER	4/14/11
Chief - Safety, Health, and Environmental Office DAN MULLEN	4/14/11
DFRC Chief Information Officer KEN NORLIN	4/14/11

DATE STRTD	11/04/10	DATE PRNTD	03/14/11
DRAWN BY		EDM-1703	
SCALE	AS NOTED	TRADE SH. No.	S2.2
FILE NAME		SHEET No. 94 of 193	

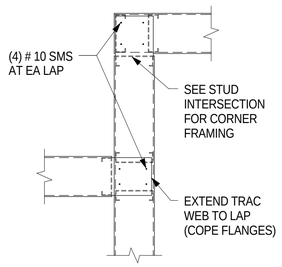

TRACKS AT SAME ELEVATION

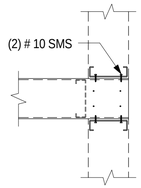

TRACKS AT
DIFFERENT ELEVATION

PLAN VIEW

TOP TRACK INTERSECTION

SCALE: 1" = 1'-0" | 10 / S2.3

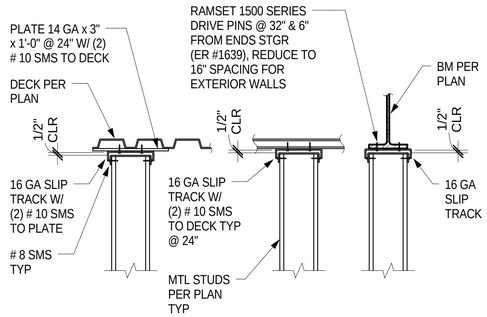

WALL PARALLEL TO DECK | WALL PERPENDICULAR TO DECK | WALL AT BEAM

TOP TRACK CONNECTION

SCALE: 1" = 1'-0" | 7 / S2.3

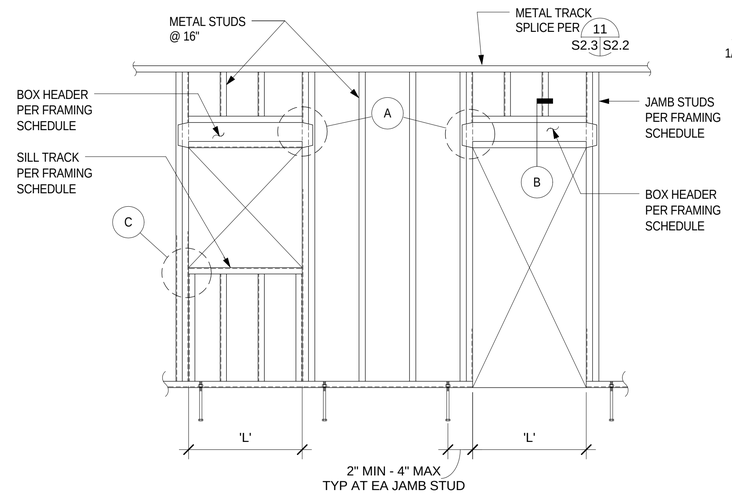

WALL ELEVATION

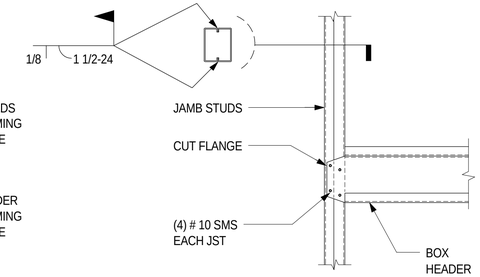

A HEADER CONNECTION

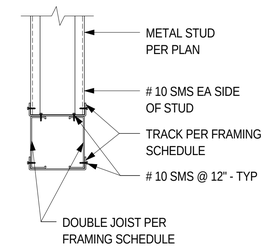

B BOX HEADER

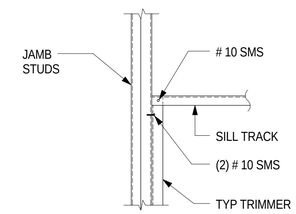

C SILL CONNECTION

FRAMING SCHEDULE

WALL TYPE	SPAN LENGTH 'L'	BOX HEADER		JAMB STUDS	NO. # 10 WAFER HEAD SMS AT EA JST TO JAMB
		DBL JST	TRACK		
2 1/2" STUDS	0" TO 8'-0"	2 - 600S162-43	2 - 250T125-33	250S137-33	4
	-	-	-	-	-
3 5/8" STUDS	0" TO 6'-0"	2 - 362S137-33	2 - 362S137-33	2 - 362S137-33	4
	6'-1" TO 10'-0"	2 - 600S137-33	2 - 362S137-33	2 - 362S137-33	4
4" STUDS	0" TO 10'-0"	2 - 600S162-43	2 - 400T125-43	2 - 400S162-43	4
6" STUDS	0" TO 6'-0"	2 - 600S162-43	2 - 600T125-43	2 - 600S162-43	4
	6'-1" TO 10'-0"	2 - 600S162-54	2 - 600T125-54	2 - 600S162-54	4
	10'-1" TO 12'-0"	2 - 600S162-68	2 - 600T125-54	2 - 600S162-68	4
8" STUDS	10'-1" TO 12'-0"	2 - 800S162-68	2 - 800T125-54	2 - 800S162-68	4

NOTES:

1. METAL STUD WALL FRAMING MEMBERS SHALL BE IN ACCORDANCE WITH ER #4943P, WORK WITH 6 S2.2 S2.2
2. FOR WALL BRIDGING, SEE 11 S2.3 S2.3

METAL STUD WALL FRAMING

SCALE: 1" = 1'-0" | 2 / S2.3

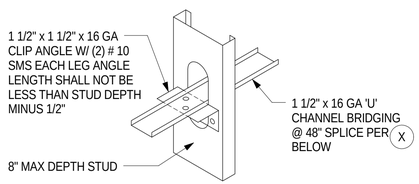

CHANNEL BRIDGING

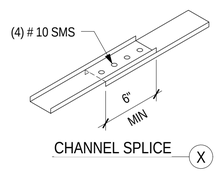

CHANNEL SPLICE X

CHANNEL BRIDGING/SPLICE

SCALE: 1 1/2" = 1'-0" | 11 / S2.3

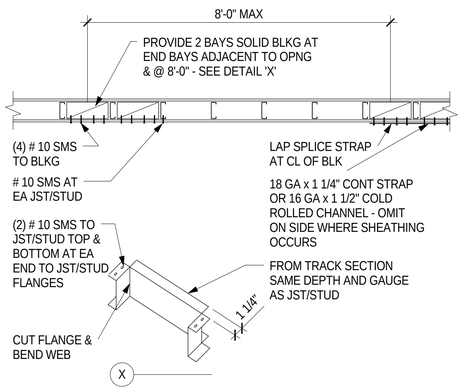

BLOCKING/BRIDGING

SCALE: 1/2" = 1'-0" | 8 / S2.3

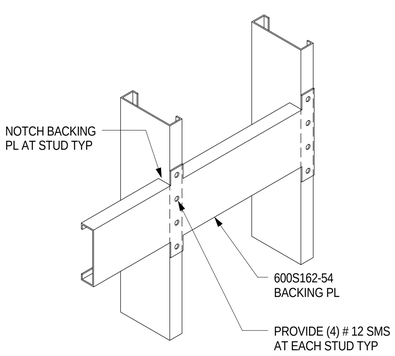

BACKING PLATE

SCALE: 1 1/2" = 1'-0" | 12 / S2.3

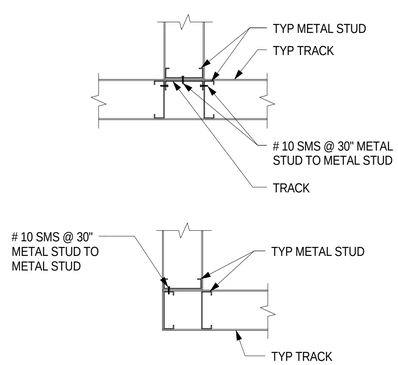

PLAN VIEW

STUD INTERSECTION

SCALE: 1" = 1'-0" | 9 / S2.3

REGISTERED PROFESSIONAL ENGINEER
JOHN P. OPHER
No. 2794
Exp. 3-31-12
STRUCTURAL
STATE OF CALIFORNIA

SDSE
Structural Engineers

DEVELOPMENT ONE, INC.
1611 East Fourth Street, Suite 250
Santa Ana, California 92701
J. Bruce Camino, Architect, AIA, NCARB
(714) 689-0298
(714) 648-0197 FAX

DATE	SYM	REVISION	BY	A'PD

NATIONAL AERONAUTICS AND SPACE ADMINISTRATION

DRYDEN FLIGHT RESEARCH CENTER
EDWARDS, CA

DRAWING TITLE

TYPICAL DETAILS

PROJECT TITLE

FACILITIES SUPPORT CENTER BUILDING
100% FINAL DESIGN SUBMITTAL

APPROVALS		DATE
Chief, Facilities Engineering Division/Project Office DAN CROWLEY		4/14/11
Project Requestor /Customer DAN CROWLEY		4/14/11
Facilities Project Manager GEMMA FLORES		4/14/11
Chief, Office of Protective Services JOHN ZELLMER		4/14/11
Chief - Safety, Health, and Environmental Office DAN MULLEN		4/14/11
DFRC Chief Information Officer KEN NORLIN		4/14/11

DATE STRTD	11/04/10	DATE PRNTD	03/14/11
DRAWN BY		EDM-1703	
SCALE	AS NOTED	TRADE SH. No. S2.3	
FILE NAME		SHEET No. 95 of 193	

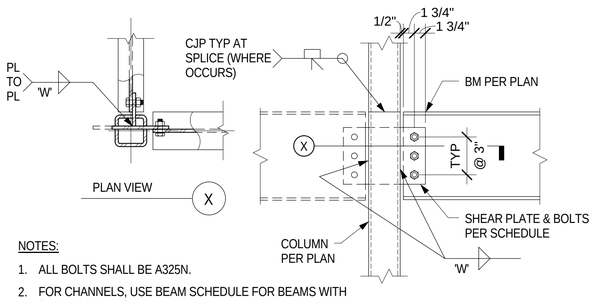

NOTES:

1. ALL BOLTS SHALL BE A325N.
2. FOR CHANNELS, USE BEAM SCHEDULE FOR BEAMS WITH SIMILAR DEPTHS.
3. PROVIDE 1/4" CAP PLATE AT TOP OF ALL COLUMNS.
4. MAXIMUM SLOT WIDTH IN COLUMN FOR PLATE = SHEAR PLATE THICKNESS + 1/16".

BEAM SCHEDULE

BEAM	BOLT SIZE	BOLTS	SHEAR PLATE	WELD 'W'
W 6, 8, 10	7/8" DIA	2	1/4"	3/16"
W 12	7/8" DIA	3	1/4"	3/16"
W 14	7/8" DIA	3	5/16"	1/4"
W 16	7/8" DIA	4	5/16"	1/4"
W 18	7/8" DIA	5	3/8"	5/16"
W 21	7/8" DIA	6	3/8"	5/16"
W 24	7/8" DIA	7	3/8"	5/16"

BEAM TO COLUMN CONNECTION

SCALE: 1" = 1'-0" | 7 | S3.2 | S2.4

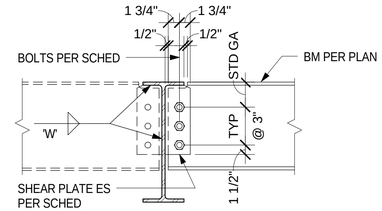

CONNECTION SCHEDULE

BEAM	BOLT SIZE	BOLTS	SHEAR PLATE	WELD 'W'
W 6, 8, 10	7/8" DIA	2	1/4"	3/16"
W 12	7/8" DIA	3	1/4"	3/16"
W 14	7/8" DIA	3	5/16"	1/4"
W 16	7/8" DIA	4	5/16"	1/4"
W 18	7/8" DIA	5	3/8"	5/16"
W 21	7/8" DIA	6	3/8"	5/16"
W 24	7/8" DIA	7	3/8"	5/16"

NOTES:

1. ALL BOLTS SHALL BE A325N.
2. FOR CHANNELS, USE BEAM SCHEDULE FOR BEAMS WITH SIMILAR DEPTHS.

BEAM TO BEAM CONNECTION

SCALE: 1" = 1'-0" | 5 | S3.4 | S2.4

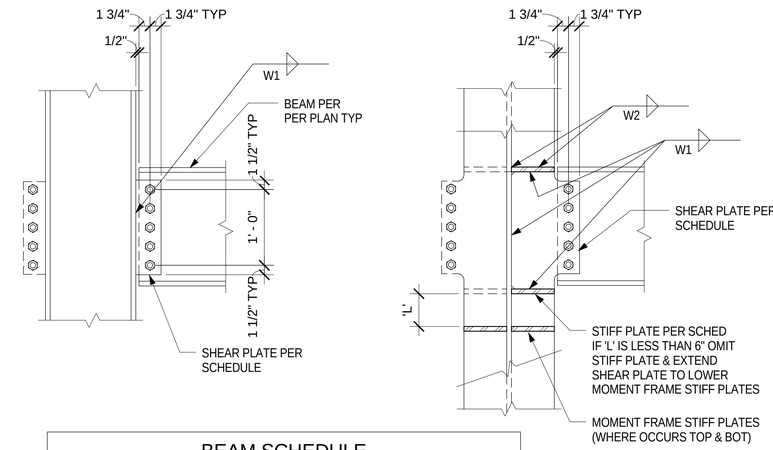

BEAM SCHEDULE

BEAM	BOLT SIZE	NO. BOLTS	SHEAR PLATE	STIFF PLATE	WELD W1	WELD W2
W 6, 8, 10	7/8" DIA	2	1/4"	3/8"	3/16"	1/4"
W 12	7/8" DIA	3	1/4"	3/8"	3/16"	1/4"
W 14	7/8" DIA	3	5/16"	3/8"	1/4"	1/4"
W 16	7/8" DIA	4	5/16"	3/8"	1/4"	1/4"
W 18	7/8" DIA	5	3/8"	3/8"	5/16"	1/4"
W 21	7/8" DIA	6	3/8"	3/8"	5/16"	1/4"
W 24	7/8" DIA	7	3/8"	1/2"	5/16"	5/16"

NOTES:

1. ALL BOLTS SHALL BE A325N.
2. WHERE MOMENT FRAME STIFFENERS OCCUR, THEY SHALL TAKE PRECEDENCE OVER STIFF PLATES SHOWN ON THIS DETAIL.
3. FOR CHANNELS, USE BEAM SCHEDULE FOR BEAMS WITH SIMILAR DEPTH.

BEAM TO WF COLUMN CONNECTION

SCALE: 1" = 1'-0" | 2 | S2.4

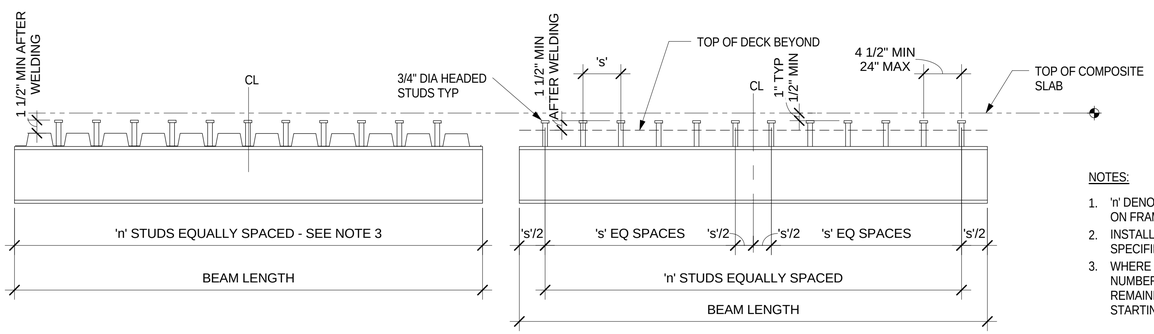

PERPENDICULAR TO DECK

PARALLEL TO DECK

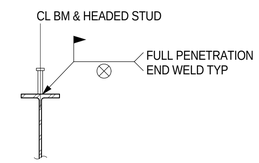

NOTES:

1. 'n' DENOTES NUMBER OF STUDS INDICATED ON FRAMING MEMEBER.
2. INSTALL STUDS @ 24" WHERE 'n' IS NOT SPECIFIED, TYPICAL UON.
3. WHERE THE NUMBER OF STUDS EXCEEDS THE NUMBER OF EQUALLY SPACED FLUTES, THE REMAINING STUDS SHALL BE EQUALLY SPACED STARTING AT EACH END.

HEADED STUDS LAYOUT

SCALE: 1" = 1'-0" | 6 | S2.4

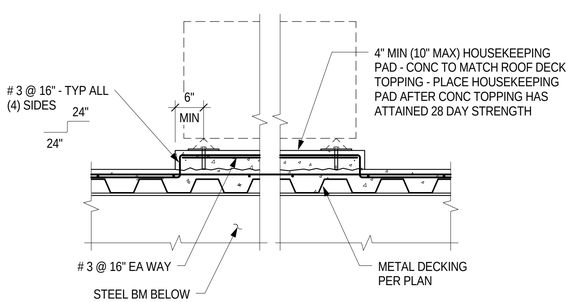

TYP HOUSEKEEPING PAD

SCALE: 3/4" = 1'-0" | 12 | S2.4

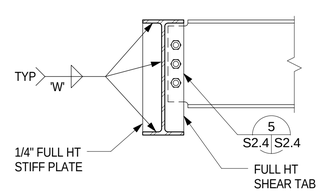

FULL HT STIFFENER PLATE

SCALE: 1" = 1'-0" | 9 | S3.2 | S2.4

SDSE Structural Engineers

DEVELOPMENT ONE, INC.
1611 East Fourth Street, Suite 250
Santa Ana, California 92701
J. Bruce Camino, Architect, AIA, NCARB
(714) 689-0298
(714) 648-0197 FAX

DATE	SYM	REVISION	BY	A'PD

NATIONAL AERONAUTICS AND SPACE ADMINISTRATION

DRYDEN FLIGHT RESEARCH CENTER
EDWARDS, CA

DRAWING TITLE

TYPICAL DETAILS

PROJECT TITLE

FACILITIES SUPPORT CENTER BUILDING
100% FINAL DESIGN SUBMITTAL

APPROVALS	DATE
Chief, Facilities Engineering Division: DAN CROWLEY	4/14/11
Project Requestor /Customer: DAN CROWLEY	4/14/11
Facilities Project Manager: GEMMA FLORES	4/14/11
Chief, Office of Protective Services: JOHN ZELLMER	4/14/11
Chief - Safety, Health, and Environmental Office: DAN MULLEN	4/14/11
DFRC Chief Information Officer: KEN NORLIN	4/14/11

DATE STRTD	11/04/10	DATE PRNTD	03/14/11
DRAWN BY		EDM-1703	
SCALE	AS NOTED	TRADE SH. No.	S2.4
FILE NAME		SHEET No. 96 of 193	

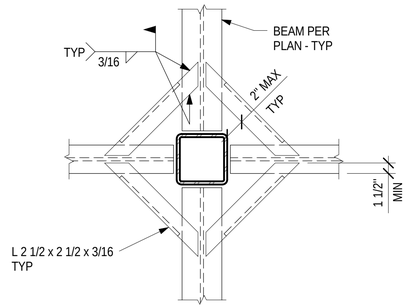

PLAN VIEW

DECK SUPPORT AT COLUMN

SCALE: 1" = 1'-0" | 10 / S2.5

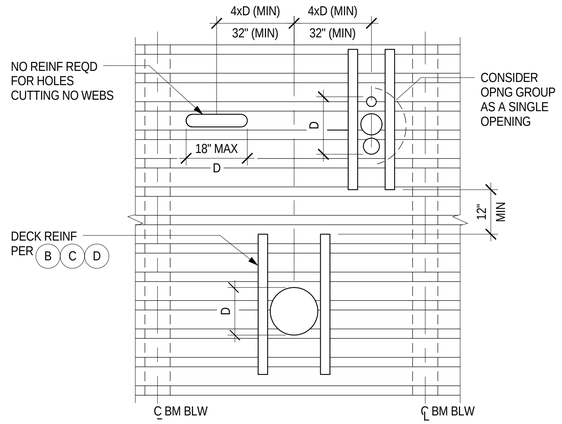

A HOLES CUTTING FOR NO MORE THAN 3 ADJACENT WEBS FOR ROOF OR FLOOR DECK

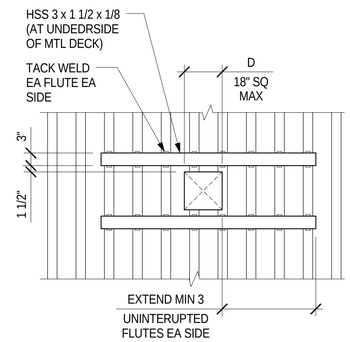

B DECK WITHOUT CONCRETE TOPPING

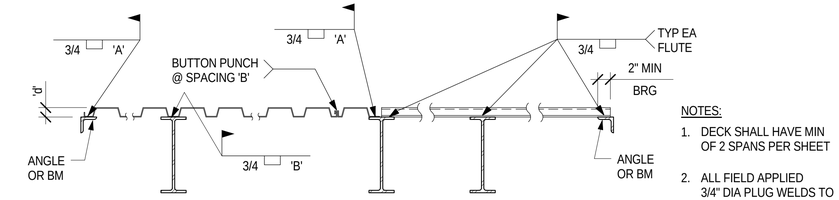

NOTES:

1. DECK SHALL HAVE MIN OF 2 SPANS PER SHEET
2. ALL FIELD APPLIED 3/4" DIA PLUG WELDS TO BE 1/2" DIA EFFECTIVE

LONGITUDINAL SECTION

TRANSVERSE SECTION

DECKING		MIN. SECTION PROPERTIES			SPACING		REMARKS
'd'	GA	I (IN^4)	+ S (IN^3)	- S (IN^3)	'A'	'B'	
1 1/2"	20	0.216	0.235	0.248	12"	12"	

NON-COMPOSITE DECK WELDING

SCALE: 1" = 1'-0" | 1 / S2.5

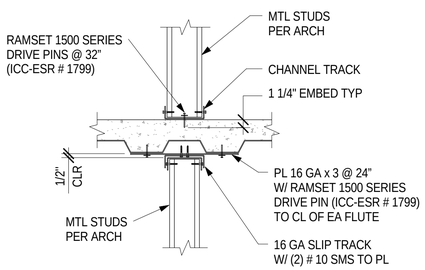

WALL PARALLEL W/ DECK FLUTES

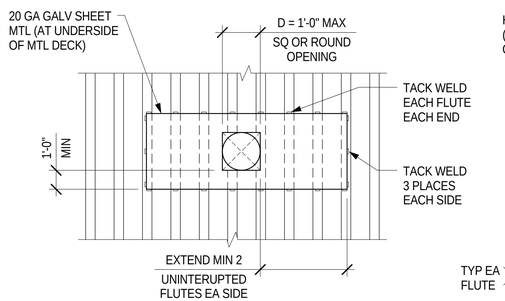

C DECK WITH OR WITHOUT CONCRETE TOPPING

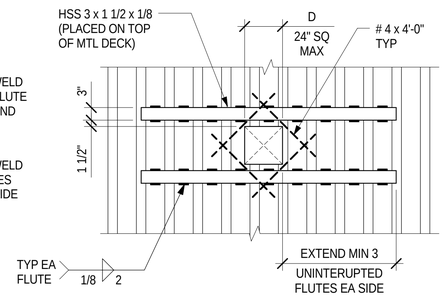

D DECK WITH CONCRETE TOPPING

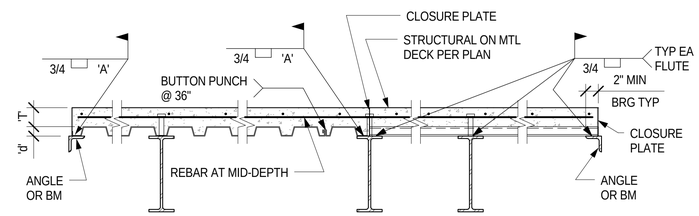

NOTES:

1. DECK SHALL HAVE MIN OF 2 SPANS PER SHEET
2. ALL FIELD APPLIED 3/4" DIA PLUG WELDS TO BE 1/2" DIA EFFECTIVE
3. PLUG WELDS MAY BE OMITTED WHERE THEY COINCIDE WITH SHEAR STUDS
4. ALL DECK WITH CONC FILL SHALL BE A "VENTED" TYPE

LONGITUDINAL SECTION

TRANSVERSE SECTION

DECKING		CONCRETE TOPPING	MIN. SECTION PROPERTIES			SPACING		REMARKS
'd'	GA	'T'	I (IN^4)	+ S (IN^3)	- S (IN^3)	'A'	'B'	
2"	20	3 1/2"	0.423	0.361	0.370	12"		NORMAL WEIGHT CONCRETE TOPPING

DECK SUPPORT AT SMALL OPENINGS

SCALE: 1" = 1'-0" | 6 / S2.5

COMPOSITE DECK WELDING

SCALE: 1" = 1'-0" | 2 / S2.5

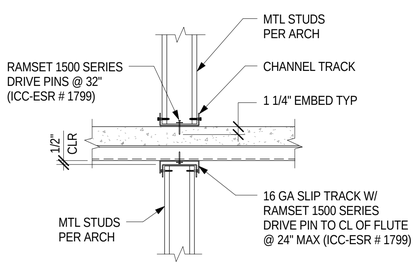

WALL PERPENDICULAR TO DECK FLUTES

TRACK CONNECTION AT DECK

SCALE: 1" = 1'-0" | 12 / S2.5

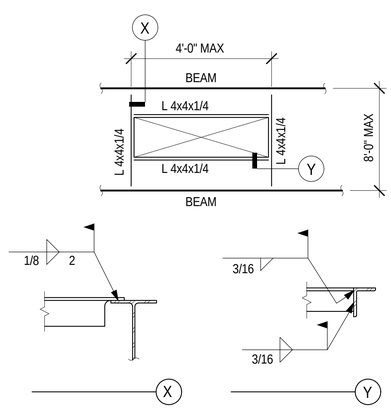

SUPPORT AT LARGE OPENINGS

SCALE: 1" = 1'-0" | 9 / S2.5

SDSe Structural Engineers

DEVELOPMENT ONE, INC.
1611 East Fourth Street, Suite 250
Santa Ana, California 92701
J. Bruce Camino, Architect, AIA, NCARB
(714) 689-0298
(714) 648-0197 FAX

DATE	SYM	REVISION	BY	A'PD

NATIONAL AERONAUTICS AND SPACE ADMINISTRATION
DRYDEN FLIGHT RESEARCH CENTER
EDWARDS, CA

DRAWING TITLE: TYPICAL DETAILS

PROJECT TITLE: FACILITIES SUPPORT CENTER BUILDING 100% FINAL DESIGN SUBMITTAL

APPROVALS	DATE
Chief, Facilities Engineering Division, Safety Office DAN CROWLEY	4/14/11
Project Requestor /Customer DAN CROWLEY	4/14/11
Facilities Project Manager GEMMA FLORES	4/14/11
Chief, Office of Protective Services JOHN ZELLMER	4/14/11
Chief - Safety, Health, and Environmental Office DAN MULLEN	4/14/11
DFRC Chief Information Officer KEN NORLIN	4/14/11

DATE STRTD	11/04/10	DATE PRNTD	03/14/11
DRAWN BY			
SCALE	AS NOTED	TRADE SH. No. S2.5	EDM-1703
FILE NAME			SHEET No. 97 of 193

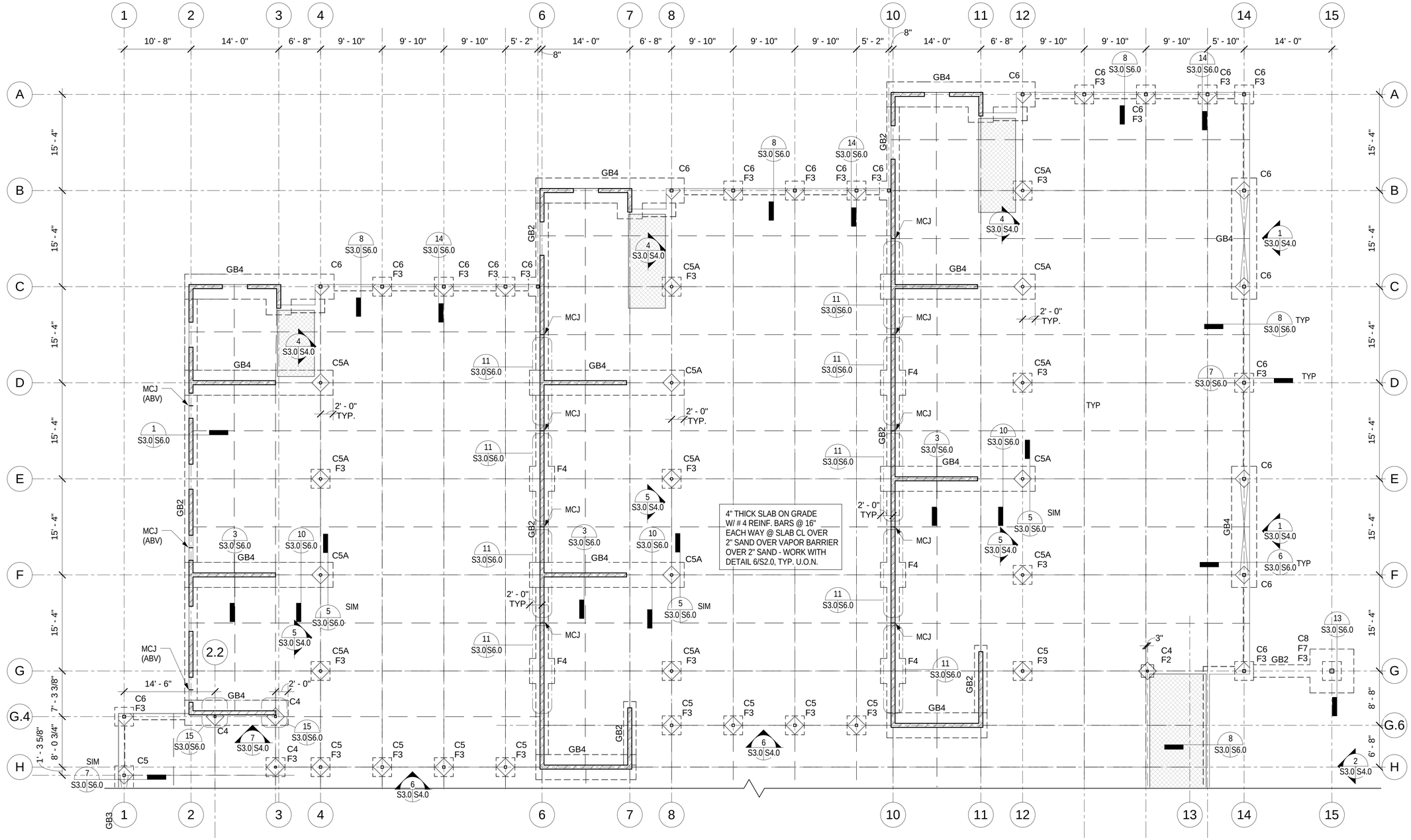

FOOTING SCHEDULE			
MARK	SIZE	THICKNESS	REINFORCEMENT
F2	2'-0" x 2'-0"	1'-6"	(3) - # 5 EA. WAY BOTT.
F3	3'-0" x 3'-0"	1'-6"	(4) - # 5 EA. WAY BOTT.
F4	4'-0" x 4'-0"	1'-6"	(4) - # 6 EA. WAY BOTT.
F7	7'-0" x 7'-0"	2'-0"	(6) - # 7 EA. WAY T&B.

GRADE BEAM SCHEDULE				
MARK	WIDTH	THICKNESS	REINFORCEMENT	TIES
GB2	2'-0"	1'-6"	(3) - # 5 CONT. T&B	
GB2.5	2'-6"	1'-6"	(3) - # 5 CONT. T&B	
GB3	3'-0"	1'-6"	(4) - # 5 CONT. T&B	# 3 @ 12"
GB4	4'-0"	2'-0"	(4) - # 6 CONT. T&B	# 3 @ 12"

NOTE:

SEE SHEET S3.1 FOR LEGEND AND ADDITIONAL NOTES

COLUMN SCHEDULE				
MARK	SIZE	BASE PLATE	ANCHOR BOLTS	GROUT
C4	HSS 4 x 4 x 1/4	3/4" x 10" x 10"	(4) 3/4" DIA. HEADED	1 1/2" NON-SHRINK
C5	HSS 5 x 5 x 1/4	3/4" x 10" x 10"	(4) 3/4" DIA. HEADED	1 1/2" NON-SHRINK
C5A	5" STD. PIPE	3/4" x 10" x 10"	(4) 3/4" DIA. HEADED	1 1/2" NON-SHRINK
C6	HSS 6 x 6 x 1/2	3/4" x 12" x 12"	(4) 3/4" DIA. HEADED	1 1/2" NON-SHRINK
C8	HSS 8 x 8 x 1/2	3/4" x 14" x 14"	(4) 3/4" DIA. HEADED	1 1/2" NON-SHRINK
P1	16" SQ. CMU	SEE 4/S6.0 FOR ADDITIONAL INFO		

NORTH FOUNDATION PLAN

SCALE: 1/8" = 1'-0" (4 / S3.0)

SDSE Structural Engineers

DEVELOPMENT ONE, INC.
1611 East Fourth Street, Suite 250
Santa Ana, California 92701
J. Bruce Camino, Architect, AIA, NCARB
(714) 689-0298
(714) 648-0197 FAX

DATE	SYM	REVISION	BY	A'PD

NATIONAL AERONAUTICS AND SPACE ADMINISTRATION

DRYDEN FLIGHT RESEARCH CENTER
EDWARDS, CA

DRAWING TITLE

NORTH - FOUNDATION PLAN

PROJECT TITLE

FACILITIES SUPPORT CENTER BUILDING
100% FINAL DESIGN SUBMITTAL

APPROVALS	DATE
Chief, Facilities Engineering Division: DAN CROWLEY	4/14/11
Project Requestor /Customer: DAN CROWLEY	4/14/11
Facilities Project Manager: GEMMA FLORES	4/14/11
Chief, Office of Protective Services: JOHN ZELLMER	4/14/11
Chief - Safety, Health, and Environmental Office: DAN MULLEN	4/14/11
DFRC Chief Information Officer: KEN NORLIN	4/14/11

DATE STRTD	11/04/10	DATE PRNTD	03/14/11
DRAWN BY		EDM-1703	
SCALE	AS NOTED	TRADE SH. No.	S3.0
FILE NAME		SHEET No. 98 of 193	

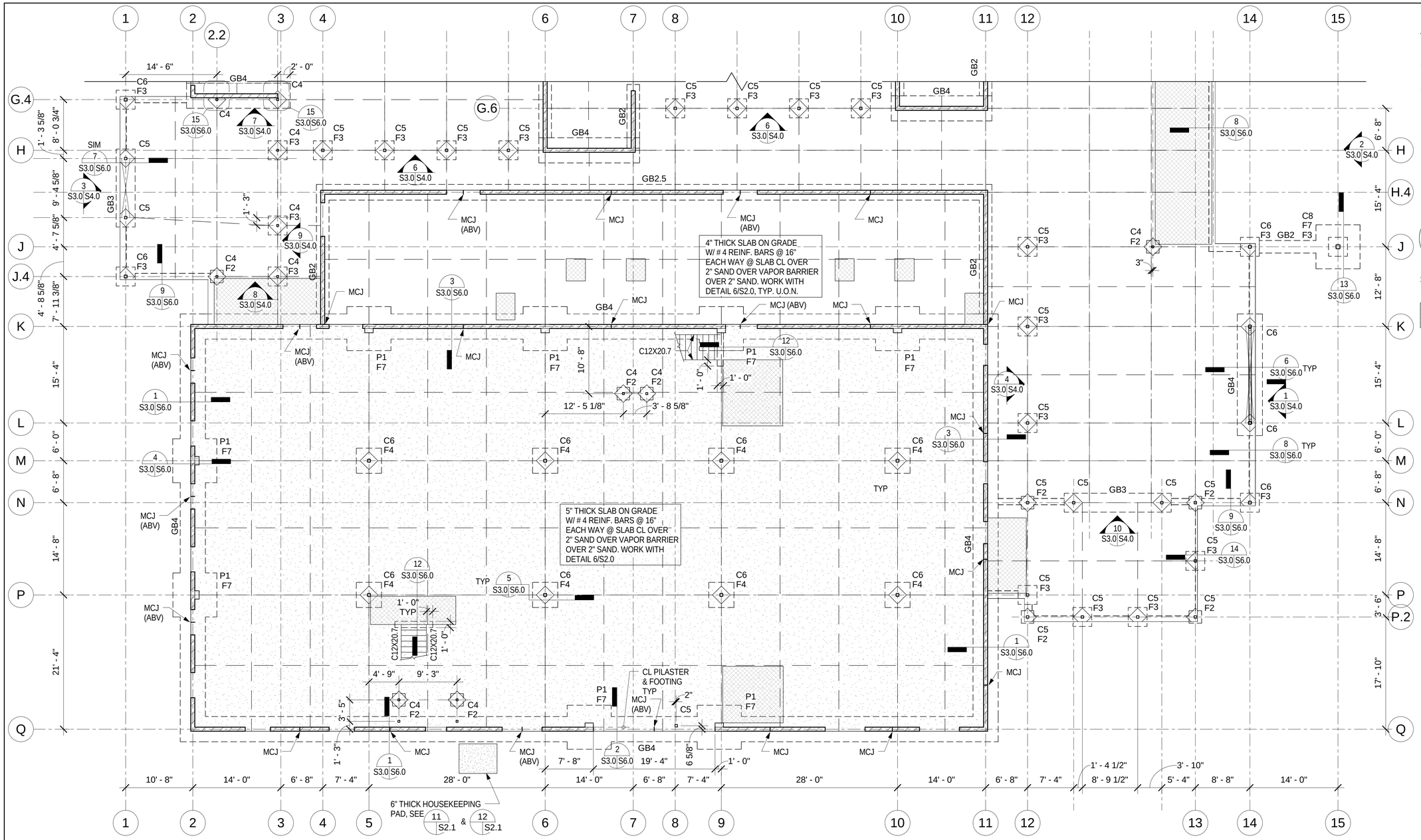

FOUNDATION NOTES:

1. ALL ELEVATIONS PER ARCH DRAWINGS
2. SEE TYPICAL DETAILS FOR TYPICAL CONDITIONS NOT INDICATED ON PLANS
3. NON-BRG/NON-SHEAR WALLS TO BE 6" x 20 GA MIN, WORK W/ 9/S3.1 S2.2

LEGEND:

GB-1	GRADE BEAM MARK - SEE SCHED SHEET S3.0
WPJ	SLAB ON GRADE JOIONTS @ 10'-0" MAX, WORK W/ 8/S3.1 S2.0
	8" CMU WALL W/ # 5 @ 24" VERT & # 4 @ 24" HORIZ - SOLID GROUTED
	DEPRESSED SLAB PER ARCH WORK W/ 7/S3.1 S2.0 & 12/S3.1 S2.0
MCJ	MASONRY CONTROL JOINT PER 1/S3.0 S2.1

SDSE Structural Engineers

DEVELOPMENT ONE, INC.
1611 East Fourth Street, Suite 250
Santa Ana, California 92701
J. Bruce Camino, Architect, AIA, NCARB
(714) 689-0298
(714) 648-0197 FAX

DATE	SYM	REVISION	BY	A'PD

NATIONAL AERONAUTICS AND SPACE ADMINISTRATION
DRYDEN FLIGHT RESEARCH CENTER
EDWARDS, CA

DRAWING TITLE
SOUTH - FOUNDATION PLAN

PROJECT TITLE
FACILITIES SUPPORT CENTER BUILDING
100% FINAL DESIGN SUBMITTAL

APPROVALS	DATE
Chief, Facilities Engineering & Assset Mgt Office DAN CROWLEY	4/14/11
Project Requestor /Customer DAN CROWLEY	4/14/11
Facilities Project Manager GEMMA FLORES	4/14/11
Chief, Office of Protective Services JOHN ZELLMER	4/14/11
Chief - Safety, Health, and Environmental Office DAN MULLEN	4/14/11
DFRC Chief Information Officer KEN NORLIN	4/14/11

DATE STRTD	11/04/10	DATE PRNTD	03/14/11
DRAWN BY		EDM-1703	
SCALE	AS NOTED	TRADE SH. No.	S3.1
FILE NAME		SHEET No. 99 of 193	

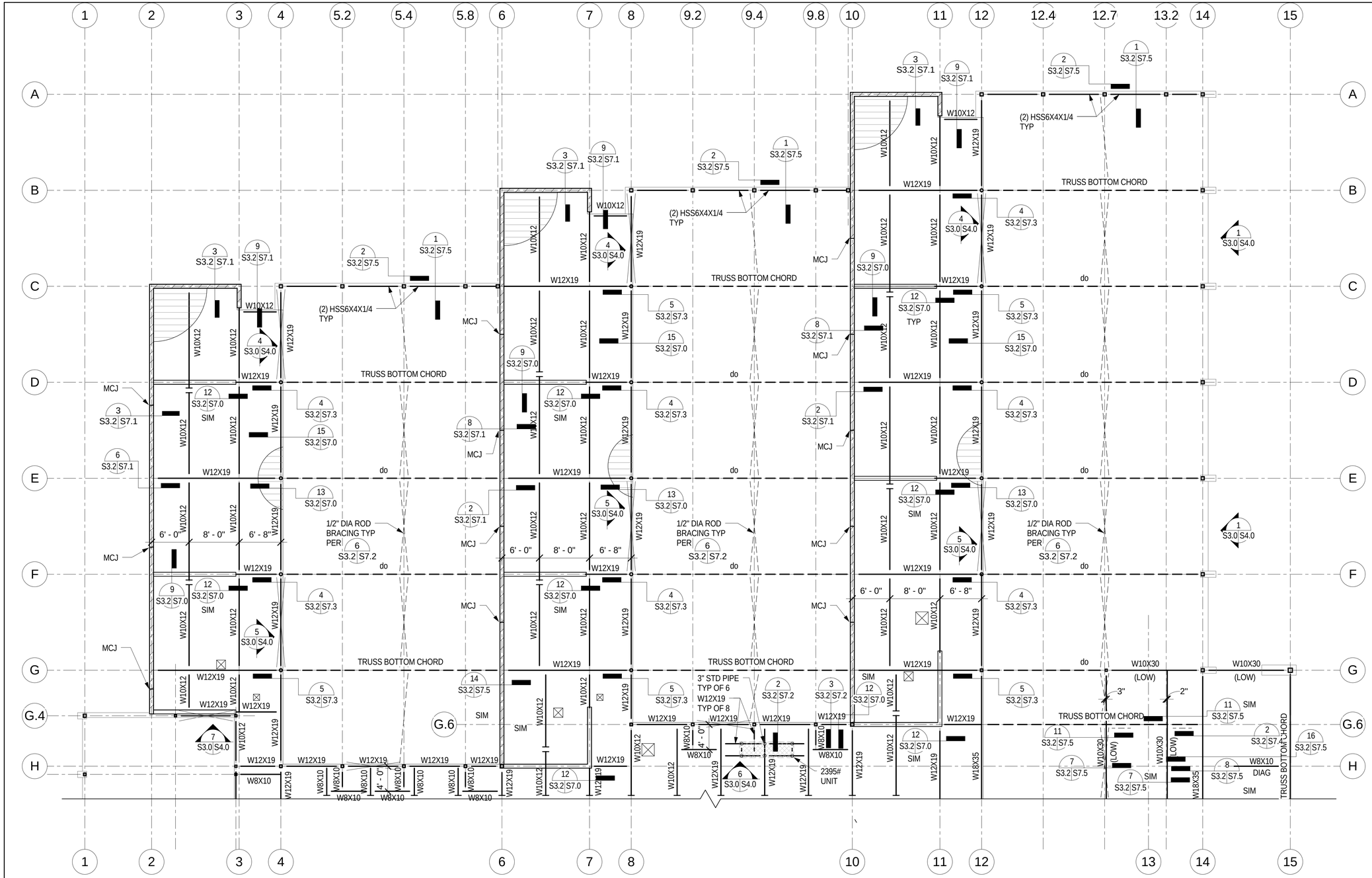

FRAMING NOTES:

1. ALL ELEVATIONS PER ARCH DRAWINGS
2. SEE TYPICAL DETAILS FOR TYPICAL CONDITIONS NOT INDICATED ON PLANS
3. FOR NON-BRG/NON-SHEAR WALL CONNECTION TO FLOOR & ROOF SEE 7 S3.2 S2.3 & 12 S3.2 S2.5

LEGEND:

- 1 1/2" x 20 GA METAL DECK - WORK W/ 1 S3.2 S2.5
- 2" x 20 GA METAL DECK W/ 3 1/2" NORMAL WT CONC TOPPING W/ # 4 @ 16" EA WAY AT CL - WORK W/ 2 S3.2 S2.5
- ROOF OPENING - WORK W/ 9 S3.2 S2.5
- FOR SMALL OPENINGS NOT SUPPORTING EQUIPMENT SEE 6 S3.2 S2.5
- MECH UNITS - COORD W/ MECH
- BRACED FRAME ELEVATION
- W12X (10) INDICATES NUMBER OF WELDED STUDS WORK W/ 6 S3.2 S2.4
- 1/2" DIA ROD BRACING
- BEAM TO BEAM CONN PER PLAN
- 6" HOUSEKEEPING PAD PER 12 S3.2 S2.4
- NON-FRAME MOMENT CONN PER PLAN
- MCJ MASONRY CONTROL JOINT PER 1 S3.0 S2.1

REGISTERED PROFESSIONAL ENGINEER CHRISTOPHER M. HUNT C 2794 Exp. 3-31-12 STRUCTURAL STATE OF CALIFORNIA

SDSE Structural Engineers

DEVELOPMENT ONE, INC.
1611 East Fourth Street, Suite 250
Santa Ana, California 92701
J. Bruce Camino, Architect, AIA, NCARB
(714) 689-0298
(714) 648-0197 FAX

DATE	SYM	REVISION	BY	A'PD

NATIONAL AERONAUTICS AND SPACE ADMINISTRATION

DRYDEN FLIGHT RESEARCH CENTER
EDWARDS, CA

DRAWING TITLE

NORTH - LOW ROOF FRAMING PLAN

PROJECT TITLE

FACILITIES SUPPORT CENTER BUILDING
100% FINAL DESIGN SUBMITTAL

APPROVALS	DATE
Chief, Facilities Engineering & Asset Mgmt Office DAN CROWLEY	4/14/11
Project Requestor /Customer DAN CROWLEY	4/14/11
Facilities Project Manager GEMMA FLORES	4/14/11
Chief, Office of Protective Services JOHN ZELLMER	04/14/11
Chief - Safety, Health, and Environmental Office DAN MULLEN	4/14/11
DFRC Chief Information Officer KEN NORLIN	4/14/11

DATE STRTD	11/04/10	DATE PRNTD	03/14/11
DRAWN BY		EDM-1703	
SCALE	AS NOTED	TRADE SH. No. S3.2	
FILE NAME		SHEET No. 100 of 193	