PIPE SIZING AND SELECTION TABLE		
PPP SIZE	FIXTURE UNITS	CROSS REF. PDI
1/2"	1-11	SC-500
3/4"	12-32	SC-750
1"	33-60	SC-1000
1-1/4"	61-113	SC-1250
1-1/2"	114-154	SC-1500
2"	155-330	SC-2000

NOTE:

FINAL SIZING AND MODEL SELECTION SHALL BE PER MANUFACTURERS RECOMMENDATIONS.

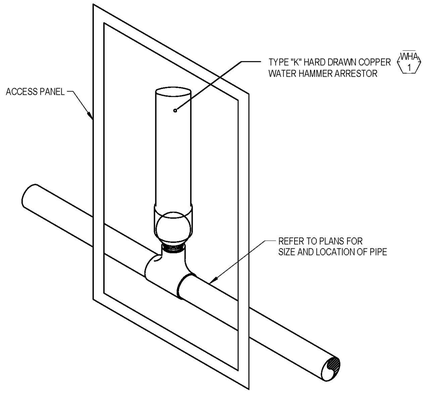

WATER HAMMER ARRESTOR DETAIL

SCALE: NONE | 4 | P4.1 | P6.0

FLOOR DRAIN TRAP PRIMER DISTRIBUTION CHART

NO. OF DRAINS	PRIMER MODEL	MAX. WATER DEL. ON 15 SEC. PRESS. DROP.	USE STAND PIPE STYLE	DISTRIBUTION UNIT IS
1	MR-500	2 OZ	STRAIGHT	NOT REQUIRED
2	MR-500	2 OZ.	STRAIGHT	2 OPENING

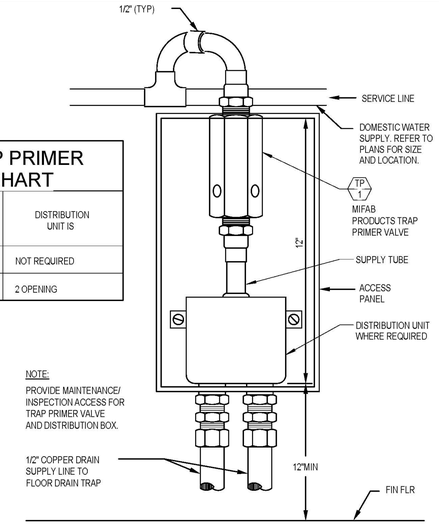

NOTE:

PROVIDE MAINTENANCE/ INSPECTION ACCESS FOR TRAP PRIMER VALVE AND DISTRIBUTION BOX.

PLUMBING TRAP PRIMER DETAIL

SCALE: NONE | 3 | P4.0 | P6.0

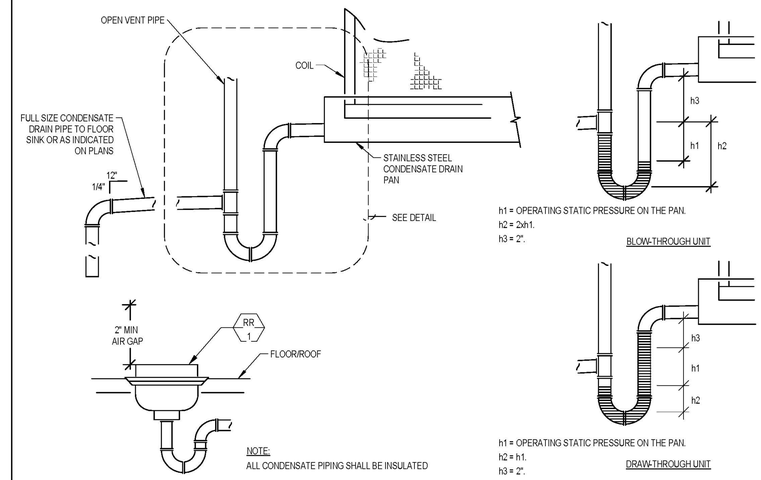

NOTE:

ALL CONDENSATE PIPING SHALL BE INSULATED

PLUMBING CONDENSATE DRAIN DETAIL

SCALE: NONE | 2 | P2.5 | P6.0

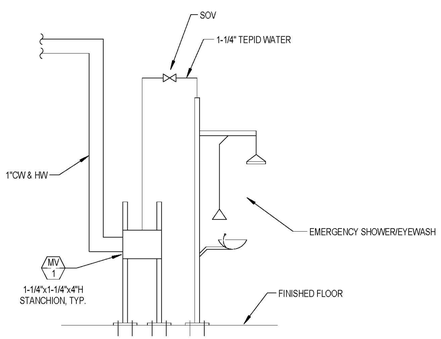

WATER SUPPLY TO EMERGENCY SHOWER/EYEWASH

SCALE: NONE | 5 | P2.2 | P6.0

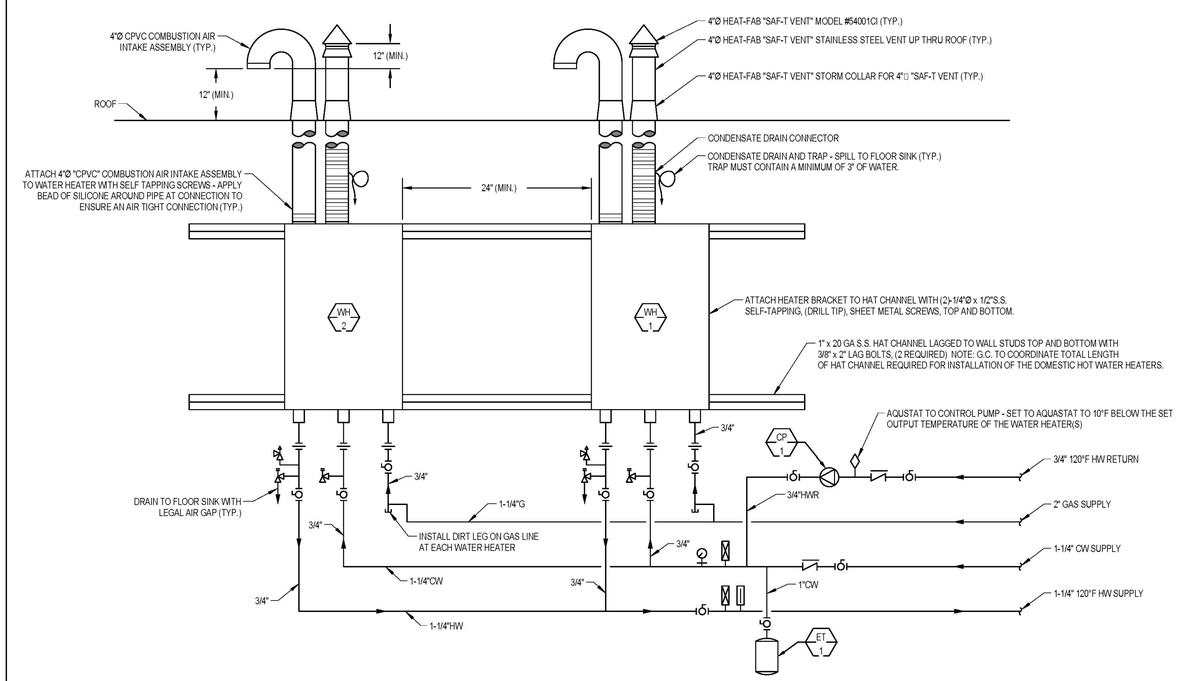

SYMBOLS LEGEND

- AQUASTAT HONEYWELL MODEL #L6006A OR L600DC
- BALL VALVE
- BOILER DRAIN VALVE
- CHECK VALVE
- PRESSURE GAUGE
- PRESSURE RELIEF VALVE
- RE-CIRCULATING PUMP
- TEMPERATURE GAUGE
- UNION
- VACUUM RELIEF VALVE

NOTES:

1. SET WATER HEAT AT 120°F (MIN.)
2. EXPANSION TANK IS PROVIDED AND INSTALLED BY THE PLUMBING CONTRACTOR.
3. INSTALL WATER HEATER CONTROL PANEL(S) ON WALL NEXT TO WATER HEATERS.

GAS FIRED TANKLESS WATER HEATER PIPING DETAIL

SCALE: NONE | 1 | P2.7 | P6.0

REGISTERED PROFESSIONAL ENGINEER DONN C. GILMORE No. 11641 Exp. 9-30-11 MECHANICAL STATE OF CALIFORNIA

DONN C. GILMORE & ASSOCIATES, INC.
Consulting Mechanical and Electrical Engineers
DCGA
4051 E. La Palma Ave., Ste. A
Anaheim, CA. 92807
Ph.: 714.630.4291
Fax: 714.630.4805

DATE	SYM	REVISION	BY	A'PD

NATIONAL AERONAUTICS AND SPACE ADMINISTRATION

DRYDEN FLIGHT RESEARCH CENTER
EDWARDS, CA

DRAWING TITLE

PLUMBING DETAILS

PROJECT TITLE

8-18-11
FACILITIES SUPPORT CENTER
100% FINAL DESIGN SUBMITTAL

APPROVALS	DATE
Chief, Facilities Engineering Assoc Proj Office DAN CROWLEY	8-18-11
Project Requestor /Customer DAN CROWLEY	8-18-11
Facilities Project Manager GEMMA FLORES	8-18-11
Chief, Office of Protective Services JOHN ZELLMER	8-18-11
Chief - Safety, Health, and Environmental Office DAN MULLEN	8-18-11
DFRC Chief Information Officer KEN NORLIN	8-18-11

DATE STRTD	11/04/10	DATE PRNTD	05/23/11
DRAWN BY		EDM-1703	
SCALE	AS NOTED	TRADE SH. No.	P6.0
FILE NAME		SHEET No. 156 of 195	

ANNOTATIONS

- 1 — DETAIL REFERENCE NUMBER
- E6 — SHEET DETAIL IS SHOWN ON
- E2 — SHEET ON WHICH DETAIL IS TAKEN

3 / 93 / 2 — LIGHTING FIXTURE CALL OUT, "3" INDICATES FIXTURE TYPE (REFER TO LIGHTING FIXTURE SCHEDULE), NUMBER ADJACENT INDICATES QUANTITIES (NUMBER IS SHOWN FOR BRANCH CIRCUIT PURPOSES ONLY, NOT FOR MATERIAL TAKE-OFF). NUMBER "93" INDICATES FIXTURE WATTS

2 — PLAN NOTE REFERENCE, REFER TO NOTES ON SHEET, OR AS DIRECTED.

4 — REVISION REFERENCE.

ABREVIATIONS

A/C	ASPHALT CONCRETE
ADA	AMERICAN WITH DISABILITIES ACT
A.F.F.	ABOVE FINISH FLOOR
A.F.G.	ABOVE FINISH GRADE
AWG	AMERICAN WIRE GAUGE
AMP, A	AMPERE
A.I.C.	AMPERES INTERRUPTING CAPACITY (SYMMETRICAL)
AF/AT	AMP FRAME, AMP TRIP
AS/AF	AMP SWITCH, AMP FUSE
CIRC.,CKT.	CIRCUIT
CB	CIRCUIT BREAKER
C	CONDUIT
CM	CENTIMETER
C.O.	CONDUIT ONLY, COMPLETE WITH PULLSTRING
CONN	CONNECTED
CPT	CONTROL POWER TRANSFORMER
CLCB	CURRENT LIMITING CIRCUIT BREAKER
CLF	CURRENT LIMITING FUSE
CT	CURRENT TRANSFORMER
DEMO	DEMOLISH
DIA	DIAMETER
E.C.	ELECTRICAL CONTRACTOR
EMS	ENERGY MANAGEMENT CONTROL SYSTEM
EMT	ELECTRICAL METALLIC TUBING
ENT	ELECTRICAL NON-METALLIC TUBING
EWC	ELECTRIC WATER COOLER
E-O-L	END-OF-LINE CIRCUIT TERMINATOR.
EF	EXHAUST FAN
E/G	EQUIPMENT GROUND (GREEN)
E	EXISTING EQUIPMENT
EP	EXPLOSION PROOF
ETR	EXISTING TO REMAIN
FA	FIRE ALARM
FLA	FULL LOAD AMPS
GFCI	GROUND FAULT CIRCUIT INTERRUPTER.
GRD	GROUND
GRY	GRAY
HOA	HAND-OFF-AUTO
HVAC	HEATING, VENTILATING AND AIR CONDITIONING
H.,W.,D.,L.	HEIGHT, WIDTH, DEPTH, LENGTH
HID	HIGH INTENSITY DISCHARGE
HP	HORSEPOWER
HPS	HIGH PRESSURE SODIUM
I/G	ISOLATED GROUND
JBOX	JUNCTION BOX
K	DEGREE KELVIN
KVA	KILOVOLT AMPERES
KW	KILOWATT
LCL	LONG CONTINUOUS LOAD
L.F.	LINEAR FEET
LTG, LTS	LIGHTING
LPS	LOW PRESSURE SODIUM
MAX.	MAXIMUM
MCB	MAIN CIRCUIT BREAKER
MIN.	MINIMUM
MLO	MAIN LUGS ONLY
MM	MILLIMETER
MV	MERCURY VAPOR
MH	METAL HALIDE
MCC	MOTOR CONTROL CENTER
MCM	THOUSAND CIRCULAR MILS
MCP	MOTOR CIRCUIT PROTECTOR
MFR.	MANUFACTURER
MTD	MOUNTED
MW	MICROWAVE
NEC	NATIONAL ELECTRICAL CODE
NC	NORMALLY CLOSED
NO	NORMALLY OPENED
NF	NON-FUSED
NIC	NIGHT LIGHTRACT
NO. or #	NUMBER
OFCI	OWNER FURNISHED, CONTRACTOR INSTALLED.
P	POLE
PC	PHOTOCELL
PRIMARY	OVER 600 VOLTS
PH. or Φ	PHASE
PROVIDE	FURNISH, INSTALL AND CONNECT.
PT	POTENTIAL TRANSFORMER
PA	PUBLIC ADDRESS
REC, RECEPT	RECEPTACLE
REF	REFRIGERATOR
RE	RELOCATE EXISTING
RGS	RIGID GALVANIZED STEEL
SECONDARY	600 VOLTS AND LESS
SQ.	SQUARE
TC	TIMECLOCK
TEL/DATA	TELEPHONE AND DATA
TV	TELEVISION
TYP	TYPICAL
U.O.N.	UNLESS OTHERWISE NOTED
UPS	UNINTERRUPTIBLE POWER SUPPLY
V	VOLTS
VA	VOLT AMPERES
WP	WEATHERPROOF
W	WIRE

GENERAL NOTES:

1. CONDUIT SIZES CALLED OUT ON DRAWINGS ARE NOT NECESSARILY BASED ON THE MINIMUM SIZE ALLOWED BY THE NATIONAL ELECTRICAL CODE AND MAY BE PURPOSELY OVERSIZED FOR EASE OF CONDUCTOR PULLING OR TO AVOID EXCESS CONDUCTOR HEATING. IN NO CASE SHALL CONDUIT SIZE BE SMALLER THAN IS REQUIRED BY THE NATIONAL ELECTRICAL CODE.
2. PROVIDE AND INSTALL JUNCTION AND PULL BOXES REQUIRED FOR THE INSTALLATION OF ELECTRICAL DEVICES AND EQUIPMENT, WHETHER OR NOT SPECIFICALLY INDICATED ON THE PLANS. SIZE OF THESE BOXES SHALL BE PER THE NATIONAL ELECTRICAL CODE.
3. FURNISH EQUIPMENT FOR TEMPORARY CONSTRUCTION POWER AS REQUIRED.
4. PENETRATIONS THROUGH FIRE BARRIERS SHALL BE FIRE STOPPED TO MAINTAIN THE INTEGRITY OF THE FIRE BARRIER. FIRE STOPPING MATERIAL SHALL BE U.L. LISTED.
5. OBTAIN APPROVAL FROM THE CONTRACTING OFFICER BEFORE DRILLING PENETRATION THROUGH STRUCTURAL MEMBERS OR FIRE RATED WALLS AND SLABS.
6. SHOULD PROJECT CONDITIONS REQUIRE REARRANGEMENT OF WORK, MARK SUCH CHANGES ON THE AS-BUILT DRAWINGS. IF THESE CHANGES REQUIRE ALTERNATE METHODS TO THOSE SPECIFIED IN THE CONTRACT DOCUMENTS, SUBMIT DRAWINGS SHOWING THE PROPOSED ALTERNATE METHODS TO THE CONTRACTING OFFICER. DO NOT PROCEED UNTIL APPROVAL IS OBTAINED. REARRANGEMENT OF WORK FOR THE PURPOSE OF COORDINATION SHALL NOT BE CONSIDERED AN ITEM FOR EXTRA COST.
7. SUBMIT SHOP DRAWINGS IN ACCORDANCE WITH THE CONTRACT DOCUMENTS. TESTING SHALL BE DONE IN ACCORDANCE WITH THE CONTRACT DOCUMENTS. SUBMIT A COPY OF SHOP DRAWINGS TO THE CONTRACTING OFFICER FOR INFORMATION.
8. PROVIDE TESTING BY OPERATING THE INSTALLATION AND RUNNING TESTS TO DEMONSTRATE ITS OPERATIONS AND COMPLIANCE WITH THE EQUIPMENT SPECIFICATIONS TEST ALL WIRING AND EQUIPMENT TO INSURE PROPER OPERATION ACCORDING TO FUNCTIONS SPECIFIED HEREIN AND ON THE DRAWINGS.
9. WARRANTY:
   WORK IN THIS SECTION SHALL BE UNDER WARRANTY FOR A PERIOD OF ONE YEAR FROM THE DATE OF ACCEPTANCE OF THE WORK AS A WHOLE BY THE CONTRACTING OFFICER. SHOULD EQUIPMENT OR MATERIAL FAIL WITHIN THIS PERIOD, REPLACE OR REPAIR THAT ITEM AT NO COST FOR MATERIAL AND/OR SERVICES IF SUCH IS DUE TO FAULTY WORKMANSHIP OR QUALITY OF MATERIAL FURNISHED.
   THE CONTRACTOR SHALL BE RESPONSIBLE FOR DAMAGE TO OF THE PREMISES CAUSED BY FAILURE IN THE EQUIPMENT FURNISHED AS PART OF THE CONTRACT DRAWINGS FOR A PERIOD OF ONE YEAR AFTER THE FINAL ACCEPTANCE OF THE WORK AS A WHOLE.
10. MECHANICAL CONTROL SYSTEMS EQUIPMENT SHALL BE PROVIDED, INSTALLED AND WIRED BY THE MECHANICAL CONTRACTOR PER THE CONTRACT DOCUMENTS. MECHANICAL CONTRACTOR SHALL PROVIDE CONDUITS FOR CONTROL WIRING FROM DDS CONTROLLER TO MECHANICAL UNITS, ELECTRICAL POWER FOR THE MECHANICAL CONTROL SYSTEM EQUIPMENT SHALL BE PROVIDED BY THE ELECTRICAL CONTRACTOR. THIS INCLUDES THE POWER WIRING, AND CONNECTION TO THE MECHANICAL CONTROL SYSTEMS EQUIPMENT. ELECTRICAL CONTRACTOR SHALL PROVIDE CONDUITS FOR MECHANICAL THERMOSTAT TO VAV BOX CONNECTION.
11. EQUIPMENT SHALL BE DESIGNED AND INSTALLED FOR USE IN A SEISMIC ZONE 4 AREA. SEISMIC DESIGN SHALL BE STAMPED AND SIGNED BY A PROFESSIONAL STRUCTURAL ENGINEER LICENSED IN THE STATE OF CALIFORNIA.
12. TONE AND LOCATE UTILITY LINES WITHIN THE PROJECT AREA PRIOR TO START OF EXCAVATION IN ORDER TO AVOID DAMAGE TO EXISTING UNDERGROUND UTILITIES. REPAIR DAMAGE TO EXISTING UTILITIES AT NO COST TO OWNER.
13. PATCH AND PAINT EXPOSED ELECTRICAL MATERIAL, INCLUDING CONDUIT, SURFACE METAL RACEWAYS, JUNCTION BOXES, PANELS, AND DEVICES TO MATCH THE ADJACENT SURFACES IN TEXTURE AND COLOR.
14. REPAIR DAMAGE TO EXISTING CONSTRUCTION RESULTING FROM THE INSTALLATION OF ELECTRICAL ITEMS. THE AREAS REPAIRED SHALL MATCH THE ADJACENT SURFACES IN TEXTURE AND COLOR.
15. PROVIDE DEWATERING EFFORT FOR NEW BELOW GRADE EXCAVATION/TRENCHING IF GROUND WATER IS ENCOUNTERED. OBTAIN A DIGGING PERMIT BEFORE ANY EXCAVATION OR TRENCHING.
16. ELECTRICAL SPLICES SHALL BE WATERPROOF.
17. MOUNTING HARDWARE, CHANNELS AND FASTENING DEVICES IN EXTERIOR LOCATIONS SHALL BE 316 STAINLESS STEEL UNLESS NOTED.
18. PROVIDE A COMPLETE AND OPERATING ELECTRICAL SYSTEM. PROVIDE SHALL MEAN "FURNISH AND INSTALL". WORK INCLUDES INSTALLATION OF ELECTRICAL EQUIPMENT AND SYSTEMS, INCLUDING FURNISHED BY OWNER OR OTHER TRADES, COMPLETE AND OPERATIONAL TO THE SATISFACTION OF THE CONTRACTING OFFICER, AS LIMITED BY THE INTENT OF THE CONTRACT DOCUMENTS.
19. COMPLY WITH THE CONSTRUCTION PRACTICES AND REQUIREMENTS OF THE LATEST EDITION OF THE NATIONAL ELECTRIC CODE (NFPA 70), NATIONAL ELECTRICAL SAFETY CODE, AMERICAN ELECTRICIANS HANDBOOK BY CROFT EDISON ELECTRIC INSTITUTE, AMERICANS WITH DISABILITIES ACT, APPLICABLE INSTRUCTIONS OF MANUFACTURERS OF EQUIPMENT AND MATERIALS SUPPLIED FOR THE PROJECT, AND ORDINANCES, RULES AND POLICIES OF THE STATE AND COUNTY IN WHICH THE WORK IS TO BE PERFORMED.
20. VISIT THE JOB SITE AND BECOME FAMILIAR HIMSELF WITH EXISTING CONDITIONS AND THE EXTENT OF REMOVAL, RELOCATION, RECONNECTION AND/OR NEW WORK PRIOR TO BIDDING. BID SUBMISSION SHALL BE RESOLVED ALL DISCREPANCIES AND QUESTIONS AND NO EXTRA PAYMENT WILL BE AUTHORIZED FOR WORK MADE NECESSARY BY FAILURE TO DO SO.
21. CIRCUITS SHALL INCLUDE AN INSULATED GREEN GROUNDING CONDUCTOR, SIZED PER THE NATIONAL ELECTRICAL CODE. THIS CONDUCTOR SHALL BE CARRIED IN RACEWAYS INCLUDING THOSE INSTALLED FOR SWITCH LEGS AND SHALL BE ATTACHED TO THE DEVICE OR EQUIPMENT HOUSING USING A SUITABLE GROUNDING LUG.
22. AT COMPLETION OF CONSTRUCTION, PROVIDE A COPY OF AS-BUILT DRAWINGS ON CD-ROM TO THE CONTRACTING OFFICER.
23. SAWCUT EXISTING AC PAVEMENT/SIDEWALK FOR NEW UNDERGROUND DUCTLINE INSTALLATIONS. PATCH AND REPAIR AC PAVEMENT/SIDEWALK TO MATCH EXISTING ADJACENT SURFACES. AT NON-PAVED AREAS, RESTORE SURFACES TO MATCH EXISTING ADJACENT SURFACES.
24. COORDINATE AND SCHEDULED OUTAGES WITH THE CONTRACTOR OFFICE AT LEAST (3) WEEKS IN ADVANCE OF REQUESTED OUTAGE IN WRITING. CONTRACTOR SHALL BE RESPONSIBLE FOR PROVIDING GENERATOR SUPPORT FOR SCHEDULED ELECTRICAL OUTAGE DUE TO CONSTRUCTION CONTRACT WORK.
25. ELECTRICAL CONDUCTORS FOR DISTRIBUTION AT 480 VOLTS AND BELOW SHALL BE THHN, 90°C INSULATION EXCEPT WHERE SPECIFIED ON SINGLE LINE DIAGRAM TO INSTALL DLO TYPE RHH/RHW-2 90°C CONDUCTORS.
26. MINIMUM CONDUCTOR SIZE SHALL BE #12 AWG FOR BOTH POWER AND CONTROL CIRCUITS.
27. OBTAIN CONFINED SPACE PERMIT FROM NASA PRIOR TO ENTRY OF UNDER GROUND MANHOLES AND VAULTS. SUBMIT A CONFINED SPACE PLAN. EMPLOYEE CERTIFICATIONS AND THE AIR MONITORING EQUIPMENT MUST HAVE A CURRENT CALIBRATION STICKER ON THE DEVICE BEFORE PERMITS WILL BE ISSUED TO THE CONTRACTOR.
28. GOVERNMENT RESERVES THE RIGHT TO WITNESS FACTORY TESTING. NOTIFY GOVERNMENT 30 CALENDAR DAYS PRIOR TO EQUIPMENT FACTORY TESTS FOR GOVERNMENT REPRESENTATIVE ATTENDANCE.

SINGLE LINE DIAGRAM SYMBOLS

- [52] 15KV RATED DRAWOUT VACUUM CIRCUIT BREAKER.
- LOW VOLTAGE DRAWOUT METAL CLAD CIRCUIT BREAKER.
- FIXED MOUNTED LOW VOLTAGE CIRCUIT BREAKER.
- DISCONNECT SWITCH, RATED AS INDICATED.
- DRAW OUT FUSE, RATED AS INDICATED.
- SURGE ARRESTER.
- GROUND CONNECTION.
- TRANSFORMER, RATING AS INDICATED.
- METER — DIGITAL AMMETER, VOLTMETER, KILOWATT METER AS NOTED.
- CURRENT TRANSFORMER.
- DRAW OUT TYPE POTENTIAL TRANSFORMER.
- PANEL — CIRCUIT BREAKER PANELBOARD, RATED PER SCHEDULE.
- G — ENGINE GENERATOR, RATED AS INDICATED.
- TVSS — TRANSIENT VOLTAGE SURGE SUPPRESSER.
- PLC — PROGRAMMABLE LOGIC CONTROLLER.
- GND BUS — GROUND BUSS, EQUIPMENT ENCLOSURE OR WALL MOUNTED.

POWER SYMBOLS

- DUPLEX RECEPTACLE, IN FLOOR BOX.
- DOUBLE DUPLEX RECEPTACLE, RECESSED WALL MOUNTED AT +18" A.F.F. OR AS NOTED.
- DUPLEX, GFCI RECEPTACLE, RECESSED WALL MOUNTED AT +18" A.F.F. OR AS NOTED.
- SINGLE RECEPTACLE, RECESSED WALL MOUNTED AT +18" A.F.F. OR AS NOTED.
- DUPLEX RECEPTACLE, RECESSED WALL MOUNTED AT +18" A.F.F. OR AS NOTED.
- SINGLE RECEPTACLE, SURFACE MOUNTED AT +18" A.F.F. TO BOTTOM, 50A, 250V, 2-POLE, 3-WIRE, NEMA TYPE 6-50R.
- SINGLE RECEPTACLE, SURFACE MOUNTED AT +18" A.F.F. TO BOTTOM, 30A, 250V, 2-POLE, 3-WIRE, NEMA 10-30R.
- SINGLE RECEPTACLE, SURFACE MOUNTED AT 18" A.F.F. TO BOTTOM U.O.N, 30A, 250V, 3-POLE, 4-WIRE, NEMA 14-30.
- DUPLEX RECEPTACLE RECESSED MOUNTED 6" ABOVE COUNTER OR BACKSPLASH. 20A , 125V. 2-POLE, 3 WIRE, NEMA 5-20R, ISOLATED GROUND, AS NOTED.
- GFCI DUPLEX RECEPTACLE RECESSED MOUNTED 6" ABOVE COUNTER OR BACKSPLASH. 20A , 125V. 2-POLE, 3 WIRE, NEMA 5-20R.
- CROUSE-HINDS ARKTITE RECEPTACLE ASSEMBLY AREA6425, WITH BACK BOX, ANGLE ADDAPTER, RATED 60A, 600V, 3-POLE, 4-WIRE.
- CROUSE-HINDS ARKTITE RECEPTACLE AR642 RATED 60A, 600V, 3-POLE, 4-WIRE. MOUNTED 6" ABOVE COUNTER.
- JUNCTION BOX, RECESSED WALL MOUNTED AT +18" A.F.F. OR AS NOTED. 4S/DP MINIMUM OR AS REQUIRED BY N.E.C..
- JUNCTION BOX, MOUNTED IN ACCESSIBLE CEILING FOR APPLICATION DENOTED ON PLAN. 4S/DP MINIMUM OR AS REQUIRED BY N.E.C..
- JUNCTION BOX, FLOOR RECESSED MOUNTED, WITH FLUSH COVER PLATE.
- SINGLE POLE SWITCHES, WALL MOUNTED AT +48" A.F.F. (CENTER OF SWITCH). 4S/DP MINIMUM OR AS REQUIRED BY NEC.
- EXHAUST FAN, OR MOTOR LOAD. REFER TO MECHANICAL, PLUMBING OR KITCHEN DRAWINGS FOR SPECIFIC LOAD REQUIREMENTS OR AS NOTED.
- FLUSH MOUNTED ELECTRICAL PANELBOARD OR LOAD CENTER. REFER TO PANEL SCHEDULE.
- SURFACE MOUNTED ELECTRICAL PANELBOARD OR LOAD CENTER. REFER TO PANEL SCHEDULE.
- T — TRANSFORMER, REFER TO SINGLE LINE DIAGRAM.
- F — FUSED DISCONNECT SWITCH, HP RATED WITH FUSES PER EQUIPMENT MANUFACTURER AND WEATHERPROOF AS REQUIRED. PROVIDE FINAL CONNECTION TO UNIT EQUIPMENT.
- NON-FUSED DISCONNECT SWITCH, HP RATED AND WEATHERPROOF AS REQUIRED. PROVIDE FINAL CONNECTION TO UNIT EQUIPMENT.

POWER SYMBOLS

- GROUND CONNECTION, SIZE AS INDICATED OR AS REQUIRED.
- S a,b — SUBSCRIPTS AT SYMBOL INDICATE THE FOLLOWING:
  - P - PILOT LIGHT — 2 - DOUBLE POLE
  - R - REMOTE CONTROL — 3 - THREE WAY
  - M - MOTOR STARTING — 4 - FOUR WAY
  - RL - ROTARY LOCK KEY TYPE — K - KEY OPERATED
  - PB - PUSHBUTTON — LV - LOW VOLTAGE

  a, b, c, ETC. - DESIGNATES QUANTITY OF SWITCHES AT EACH LOCATION.
  NOTE: ALL WALL SWITCHES CONTROLLING EMERGENCY CIRCUITS SHALL BE ENGRAVED WITH "EMERGENCY"
- P P — PULL BOX, SIZED AS INDICATED. LETTER "P" OR "C" INDICATES POWER OR COMMUNICATIONS CIRCUITS.
- M P — MANHOLE, SIZED AS INDICATED. LETTER "P" OR "C" INDICATES POWER OR COMMNICATIONS CIRCUITS.
- GROUND WELL.
- OCCUPANCY SENSOR, DUAL TECHNOLOGY CEILING MOUNTED PER PLAN. PROVIDE SWITCH PACKS AS REQUIRED FOR SINGLE AND MULTIPLE UNITS PER ROOM.
- OCCUPANCY SENSOR, WALL MOUNTED AT +48" A.F.F. (CENTER OF SWITCH) WITH BI-LEVEL SWITCH INTEGRATED.
- DAYLIGHTING SENSOR
- PHOTOVOLTAIC PANEL 230W, 37.4VDC OUTUPT

BRANCH CIRCUIT SYMBOLS

- A-1,3,5 — HOME RUN TO PANEL. LETTER DESIGNATES PANEL, NUMBERS INDICATE CIRCUITS. UNLESS OTHERWISE NOTED.
- CONCEALED BRANCH CIRCUIT UNLESS OTHERWISE NOTED.
- CONDUIT RUN CONCEALED BELOW GRADE, 1" C MINIMUM WITH CODE SIZED EQUIPMENT GROUND.
- CONDUIT STUB OUT, CAP, MARK AND RECORD.
- CONDUIT CONTINUATION.
- INDICATES FLEXIBLE CONNECTION TO EQUIPMENT. NUMBER OF CONDUCTORS AS REQUIRED.

TELEPHONE/DATA SYMBOLS

- COMBINATION TELEPHONE AND DATA OUTLET BOX, RECESSED WALL MOUNTED AT +18" A.F.F. PROVIDE (2) 3/4"C.O. (WITH PULL ROPE) UP TO CABLE TRAY ABOVE ACCESSIBLE CEILING SPACE, WITH BUSHINGS ON ENDS. PROVIDE OUTLET BOX DOUBLE-GANG DEEP (2 1/4") BOX WITH SINGLE-GANG MUD RING.
- COMBINATION TELEPHONE AND DATA OUTLET BOX, FLOOR MOUNTED ON IN-FLOOR RACEWAY. PROVIDE (2) 2" CONDUITS (WITH PULL ROPE) BETWEEN FLOOR OUTLET BOXES AND TO TECESSED WALL. MOUNTED 12" X 10" X 4" DEEP PULLBOX 18" ABOVE FINISHED FLOOR. ALSO PROVIDE (2) 2" CONDUITS (WITH PULL ROPE) FROM RECESSED WALL MOUNTED PULLBOX UP TO CABLE TRAY ABOVE ACCESSIBLE CEILING SPACE, WITH BUSHING ON ENDS. OUTLET BOX SHOULD BE 12" X 12" X 4" DEEP AT FLOOR PENITRATION.

SIGNAL SYSTEM SYMBOLS

- S — SMOKE DETECTOR, CEILING MOUNTED.
- DD — DUCT DETECTOR, MECHANICAL SYSTEM CONTROL.

LIGHTING SYMBOLS

- LED RECESSED 2'x2' FIXTURE IN ACCESSIBLE CEILING. REFER TO LIGHTING FIXTURE SCHEDULE.
- LED RECESSED 2'x2' FIXTURE IN ACCESSIBLE CEILING. REFER TO LIGHTING FIXTURE SCHEDULE. WITH ENERGENCY BATTERY BACKUP
- LED PENDANT MOUNT LOW BAY FIXTURE.
- LED DOWNLIGHT EMERGENCY FIXTURE.
- LED DOWNLIGHT FIXTURE.
- EMERGENCY EGRESS FIXTURE.
- WALL SCONCE WITH EMERGENCY BATTERY BACK-UP FIXTURE.

LIGHT FIXTURE SCHEDULE

LUMINAIRE INFORMATION		LAMP INFORMATION		MISCELLANEOUS INFORMATION
TYPE	MANUFACTURER MODEL NO.	WATTS / VOLTS	QUANTITY, WATTAGE, TYPE	FIXTURE GENERAL DESCRIPTION
A / 120	SOLERA #ORB5-120LED-277-WW-WH-LB (OR APPROVED EQUAL)	120W / 277V	(120) 1W LEDS DIMMING DRIVER	LOW-BAY LED FIXTURE WITH ACRYLIC LENS AT BOTTOM, PENDANT MOUNTED WITH DIMMING DRIVER. TEMP:3500K 0-10V DIMMING CONTROL
B / 60	MAXLITE #MLFP2X235 (OR APPROVED EQUAL)	60W / 277V	(234) LEDS NON DIMMING DRIVER	FLAT PANEL 2'x2' LED FIXTURE, FOR T-BAR GRID, WITH INTEGRATED DRIVER, EDGE LEDS, ALUMINUM HOUSING/SINK. TEMP: 3500K.
BE / 60	MAXLITE #MLFP2X235 EM (OR APPROVED EQUAL)	60W / 277V	(234) LEDS NON DIMMING DRIVER	FLAT PANEL 2'x2' LED FIXTURE, FOR T-BAR GRID, WITH INTEGRATED DRIVER, EDGE LEDS, ALUMINUM HOUSING/SINK. TEMP: 3500K. W/EMERG. BATT. BACKUP
D / 28	JUNO #TC922LED35K-2-20-WH-LB-27 (OR APPROVED EQUAL)	28W / 277V	LED NON-DIMMING DRIVER	6" LED DOWNLIGHT WITH INTEGRATED DRIVER . TEMP: 3500K. FOR DAMP AND WET LOCATION
DE / 28	JUNO #TC922LED35K-2-BR-20-WH-LB-27 (OR APPROVED EQUAL)	28W / 277V	LED NON-DIMMING DRIVER	6" LED DOWNLIGHT WITH INTEGRATED DRIVER AND EMERGENCY BATTERY BACK-UP. TEMP: 3500K. FOR DAMP AND WET LOCASTION
E / 100	NL1 #HIGH/LOW BAY 30 (80°) (OR APPROVED EQUAL)	100W / 277V	LED NON-DIMMING DRIVER	PENDANT MOUNT, 22" DIAMETER LED FIXTURE WITH ACRYLIC LENS, 80 DEGREE REFRACTION.
F / 113	NL1 #HIGH/LOW BAY 30 (130°) (OR APPROVED EQUAL)	113W / 277V	LED NON-DIMMING DRIVER	PENDANT MOUNT, 22" DIAMETER LED FIXTURE WITH ACRYLIC LENS, 130 DEGREE REFRACTION.
G / 85	BEGA #8214MH #896A ANCHOR	85W / 277V	(1) 70W MH	PAD MOUNTED BOLLARD WITH MH LAMP. PROVIDE CONCRETE MOUNTING BASE AND ANCHOR KIT.
H / 285	LSI #CH2HM-FT-250-HPS-F-MT-BLK #RPP2 (ROUND POLE PLATE) (OR APPROVED EQUAL)	285W / 277V	(1) 250W HPS	7GA STEEL ROUND POLE (5"DIA x 24'L) WITH CONCRETE BASE. BASE COVER AND ANCHOR.
J / 570	LSI #CH2HN-FT-HPS-F-MT-BLK #RPP2 (ROUND POLE PLATE) WITH DUAL HEADS, MOUNTING HARDWARE (OR APPROVED EQUAL)	570W / 277V	(2) 250W HPS	7GA STEEL ROUND POLE (5"DIA x 24'L) WITH CONCRETE BASE. BASE COVER AND ANCHOR WITH DUAL HEADS.
K / 1.1	Beghelli #CYC-SA-LR2-C-WCS-BA (OR APPROVED EQUAL)	1.1W / 277V	LED NON-DIMMING DRIVER	CYCLONE EXIT SIGN WITH 90 MIN. BATTERY BACKUP
M / 27	Beghelli #TA24-SE-UNV-AT-RTD (OR APPROVED EQUAL)	27W / 277V	1 (24W) CF	TEMPESTA 24W CF FLUORESCENT EGRESS LIGHT WITH BATTERY BACKUP
N / 45	LSI #CHWS-FT-26-CFL2-F-UE-PLP-BB (OR APPROVED EQUAL)	45W / 277V	(2) 26W CF	WALL SCONCE WITH EMERGENCY BATTERY BACK-UP, PLATINUM COLOR, PC1277-BUTTON PHOTOCELL
R / 60	MAXLITE #MLFP2X235 (OR APPROVED EQUAL)	60W / 277V	(234) LEDS DIMMING DRIVER	FLAT PANEL 2'x2' LED FIXTURE, FOR T-BAR GRID, WITH INTEGRATED DRIVER, EDGE LEDS, ALUMINUM HOUSING/SINK. TEMP: 3500K. 0-10V DIMMING CONTROL
S / 120	SOLERA #ORB5-120LED-277-WW-WH-LB (OR APPROVED EQUAL)	120W / 277V	(120) 1W LEDS NON DIMMING DRIVER	LOW-BAY LED FIXTURE WITH ACRYLIC LENS, PENDANT MOUNTED. NON DIMMING DRIVER. TEMP:3500K
T / 35	LSI #W44 4 1 32 SSOR EM UE (OR APPROVED EQUAL)	35W / 277V	(1) 32W T8	WALL MOUNT FLUORESCENT FIXTURE WITH ELEC. BALLAST AND EMERGENCY BATTERY BACKUP.

REGISTERED PROFESSIONAL ENGINEER — KURT KAISER — No. E015151 — Exp. 6-30-12 — ELECTRICAL — STATE OF CALIFORNIA

DONN C. GILMORE & ASSOCIATES, INC.
Consulting Mechanical and Electrical Engineers
DCGA
4051 E. La Palma Ave., Ste. A
Anaheim, CA 92807
Ph.: 714.630.4291
Fax: 714.630.4805

DATE	SYM	REVISION	BY	A'PD

NATIONAL AERONAUTICS AND SPACE ADMINISTRATION
DRYDEN FLIGHT RESEARCH CENTER
EDWARDS, CA

DRAWING TITLE
ELECTRICAL NOTES, LEGEND AND ABBREVIATIONS

PROJECT TITLE
8-18-11
FACILITIES SUPPORT CENTER
100% FINAL DESIGN SUBMITTAL

APPROVALS	DATE
Cheif, Facilities Engineering & Asset Mgmt. Office — DAN CROWLEY	8-18-11
Project Requestor /Customer — DAN CROWLEY	8-18-11
Facilities Project Manager — GEMMA FLORES	8-18-11
Chief, Office of Protective Services — JOHN ZELLMER	8-18-11
Chief - Safety, Health, and Environmental Office — DAN MULLEN	8-18-11
DFRC Chief Information Officer — KEN NORLIN	8-18-11

DATE STRTD	11/04/10	DATE PRNTD	05/23/11
DRAWN BY		EDM-1703	
SCALE	AS NOTED	TRADE SH. No.	
FILE NAME		E0.1	SHEET No. 157 of 195

Branch Panel: L1

Location: Space 154
Supply From: LTG
Mounting: Surface
Enclosure: Type 1

Volts: 480/277 Wye
Phases: 3
Wires: 4

A.I.C. Rating: 65,000
Mains Type:
Mains Rating: 50 A
MCB Rating: 50 A

Notes:

CKT	Circuit Description	Trip	Poles	A		B		C		Poles	Trip	Circuit Description	CKT
1	Ltg. Rm's 200,205	20 A	1	1500	103					1	20 A	Ltg. Exit Ltg (2)	2
3	Ltg. Rm's 177 (Stairs)	20 A	1			400							4
5	Ltg. Rm's 200,205	20 A	1					1500					6
7													8
9													10
11													12
13													14
15													16
17													18
19													20
21													22
23													24
25													26
27													28
29													30
31													32
33													34
35													36
37													38
39													40
41													42
		Total Load:		1603 VA		400 VA		1500 VA					
		Total Amps:		6 A		1 A		5 A					

Legend:

Load Classification	Connected Load	Demand Factor	Estimated Demand	Panel Totals	
Lighting	22 VA	100.00%	22 VA		
Other	3400 VA	100.00%	3400 VA	Total Conn. Load:	3503 VA
Lighting - Dwelling Unit	81 VA	100.00%	81 VA	Total Est. Demand:	3503 VA
				Total Conn. Current:	4 A
				Total Est. Demand	4 A

Notes:

Branch Panel: L2

Location:
Supply From: LTG
Mounting: Surface
Enclosure: Type 1

Volts: 480/277 Wye
Phases: 3
Wires: 4

A.I.C. Rating: 65,000
Mains Type:
Mains Rating: 50 A
MCB Rating: 50 A

Notes:

CKT	Circuit Description	Trip	Poles	A		B		C		Poles	Trip	Circuit Description	CKT
1	Ltg. Rm's 103,104	20 A	1	806	1000					1	20 A	Ltg. Rm's 171,170,111	2
3	Ltg. Rm. 100	20 A	1			705	974			1	20 A	Ltg. Rm's 101,102	4
5	Ltg. Rm's 103,104	20 A	1					748	1000	1	20 A	Ltg. Rm's 106,107,115,114,113,112	6
7	Ltg. Site Lighting Bollards (14)	20 A	1	1190	311					1	20 A	Ltg. Rm's 102,106,107,170	8
9	Ltg. Site Lighting (5)	20 A	1			1425							10
11	Ltg. Site Lighting (6)	20 A	1					1710					12
13													14
15													16
17													18
19													20
21													22
23													24
25													26
27													28
29													30
31													32
33													34
35													36
37													38
39													40
41													42
		Total Load:		3307 VA		3104 VA		3458 VA					
		Total Amps:		12 A		11 A		12 A					

Legend:

Load Classification	Connected Load	Demand Factor	Estimated Demand	Panel Totals	
Lighting	2208 VA	100.00%	2208 VA		
Other	7328 VA	100.00%	7328 VA	Total Conn. Load:	9869 VA
Lighting - Dwelling Unit	243 VA	100.00%	243 VA	Total Est. Demand:	9892 VA
Lighting - Exterior	90 VA	125.00%	113 VA	Total Conn. Current:	12 A
				Total Est. Demand	12 A

Notes:

Branch Panel: L3

Location: Space 36
Supply From: LTG
Mounting: Surface
Enclosure: Type 1

Volts: 480/277 Wye
Phases: 3
Wires: 4

A.I.C. Rating: 65,000
Mains Type:
Mains Rating: 50 A
MCB Rating: 50 A

Notes:

CKT	Circuit Description	Trip	Poles	A		B		C		Poles	Trip	Circuit Description	CKT
1	Ltg. Rm's	20 A	1	1612									2
3	Ltg. Rm 120	20 A	1			945							4
5	Ltg. Rm 120	20 A	1					675					6
7	Ltg. Rm 120	20 A	1	528									8
9													10
11													12
13													14
15													16
17													18
19													20
21													22
23													24
25													26
27													28
29													30
31													32
33													34
35													36
37													38
39													40
41													42
		Total Load:		2140 VA		945 VA		675 VA					
		Total Amps:		8 A		3 A		2 A					

Legend:

Load Classification	Connected Load	Demand Factor	Estimated Demand	Panel Totals	
Lighting	1882 VA	100.00%	1882 VA		
Other	1806 VA	100.00%	1806 VA	Total Conn. Load:	3760 VA
Lighting - Dwelling Unit	27 VA	100.00%	27 VA	Total Est. Demand:	3772 VA
Lighting - Exterior	45 VA	125.00%	56 VA	Total Conn. Current:	5 A
				Total Est. Demand	5 A

Notes:

Branch Panel: L4

Location: Space 122
Supply From: LTG
Mounting: Surface
Enclosure: Type 1

Volts: 480/277 Wye
Phases: 3
Wires: 4

A.I.C. Rating: 65,000
Mains Type:
Mains Rating: 50 A
MCB Rating: 50 A

Notes:

CKT	Circuit Description	Trip	Poles	A		B		C		Poles	Trip	Circuit Description	CKT
1	Ltg. Rm's 131,132,133,134,135,136,137	20 A	1	1612									2
3	Ltg. Rm 130	20 A	1			1598							4
5	Ltg. Rm 130	20 A	1					270					6
7	Ltg. Rm 130	20 A	1	280									8
9													10
11													12
13													14
15													16
17													18
19													20
21													22
23													24
25													26
27													28
29													30
31													32
33													34
35													36
37													38
39													40
41													42
		Total Load:		1892 VA		1598 VA		270 VA					
		Total Amps:		7 A		6 A		1 A					

Legend:

Load Classification	Connected Load	Demand Factor	Estimated Demand	Panel Totals	
Lighting	1882 VA	100.00%	1882 VA		
Other	1806 VA	100.00%	1806 VA	Total Conn. Load:	3760 VA
Lighting - Dwelling Unit	27 VA	100.00%	27 VA	Total Est. Demand:	3772 VA
Lighting - Exterior	45 VA	125.00%	56 VA	Total Conn. Current:	5 A
				Total Est. Demand	5 A

Notes:

REGISTERED PROFESSIONAL ENGINEER
KURT KAISER
No. E015151
Exp. 6-30-12
ELECTRICAL
STATE OF CALIFORNIA

DONN C. GILMORE & ASSOCIATES, INC.
Consulting Mechanical and Electrical Engineers
DCGA
4051 E. La Palma Ave., Ste. A
Anaheim, CA. 92807
Ph.: 714.630.4291
Fax: 714.630.4805

DATE	SYM	REVISION	BY	A'PD

NATIONAL AERONAUTICS AND SPACE ADMINISTRATION
DRYDEN FLIGHT RESEARCH CENTER
EDWARDS, CA

DRAWING TITLE
ELECTRICAL SCHEDULES

PROJECT TITLE
8-18-11
FACILITIES SUPPORT CENTER
100% FINAL DESIGN SUBMITTAL

APPROVALS	DATE
Chief, Facilities Engineering Assist Mgmt Office DAN CROWLEY	8-18-11
Project Requestor /Customer DAN CROWLEY	8-18-11
Facilities Project Manager GEMMA FLORES	8-18-11
Chief, Office of Protective Services JOHN ZELLMER	8-18-11
Chief - Safety, Health, and Environmental Office DAN MULLEN	8-18-11
DFRC Chief Information Officer KEN NORLIN	8-18-11

DATE STRTD	11/04/10	DATE PRINTD	05/23/11
DRAWN BY		EDM-1703	
SCALE	AS NOTED	TRADE SH. No.	E0.2
FILE NAME		SHEET No. 158 of 195	

Branch Panel: L5

Location: Space 153 **Volts:** 480/277 Wye **A.I.C. Rating:** 65,000
Supply From: LTG **Phases:** 3 **Mains Type:**
Mounting: Surface **Wires:** 4 **Bus Rating:** 125 A
Enclosure: Type 1 **MCB Rating:** 50 A

Notes:

CKT	Circuit Description	Trip	Poles	A		B		C		Poles	Trip	Circuit Description	CKT
1	Ltg. Rm's 141,142,143,144,145,146	20 A	1	1116									2
3	Ltg. Rm's 140,150	20 A	1			1536							4
5	Ltg. Rm. 140	20 A	1					270					6
7	Ltg. Rm. 140	20 A	1	280									8
9													10
11													12
13													14
15													16
17													18
19													20
21													22
23													24
25													26
27													28
29													30
31													32
33													34
35													36
37													38
39													40
41													42
		Total Load:		1396 VA		1536 VA		270 VA					
		Total Amps:		5 A		6 A		1 A					

Legend:

Load Classification	Connected Load	Demand Factor	Estimated Demand	Panel Totals	
Lighting	1324 VA	100.00%	1324 VA		
Other	1806 VA	100.00%	1806 VA	**Total Conn. Load:**	3202 VA
Lighting - Dwelling Unit	27 VA	100.00%	27 VA	**Total Est. Demand:**	3214 VA
Lighting - Exterior	45 VA	125.00%	56 VA	**Total Conn. Current:**	4 A
				Total Est. Demand	4 A

Notes:

Branch Panel: L6

Location: Space 110 **Volts:** 480/277 Wye **A.I.C. Rating:** 65,000
Supply From: LTG **Phases:** 3 **Mains Type:**
Mounting: Surface **Wires:** 4 **Bus Rating:** 125 A
Enclosure: Type 1 **MCB Rating:** 50 A

Notes:

CKT	Circuit Description	Trip	Poles	A		B		C		Poles	Trip	Circuit Description	CKT
1	Ltg. Rm's 105,160,204	20 A	1	692	1100					1	20 A	Ltg. Rm's 161,175,200	2
3	Lighting Space 159	20 A	1			2294	400			1	20 A	Ltg. Rm 169	4
5	Lighting Space 161	20 A	1					1058	393	1	20 A	Ltg. Rm 172	6
7													8
9													10
11													12
13													14
15													16
17													18
19													20
21													22
23													24
25													26
27													28
29													30
31													32
33													34
35													36
37													38
39													40
41													42
		Total Load:		1792 VA		2694 VA		1451 VA					
		Total Amps:		6 A		10 A		5 A					

Legend:

Load Classification	Connected Load	Demand Factor	Estimated Demand	Panel Totals	
Lighting	3892 VA	100.00%	3892 VA		
Other	1810 VA	100.00%	1810 VA	**Total Conn. Load:**	5937 VA
Lighting - Dwelling Unit	145 VA	100.00%	145 VA	**Total Est. Demand:**	5960 VA
Lighting - Exterior	90 VA	125.00%	113 VA	**Total Conn. Current:**	7 A
				Total Est. Demand	7 A

Notes:

Branch Panel: L7

Location: Space 119 **Volts:** 480/277 Wye **A.I.C. Rating:** 65,000
Supply From: MAIN **Phases:** 3 **Mains Type:**
Mounting: Surface **Wires:** 4 **Bus Rating:** 225 A
Enclosure: Type 1 **MCB Rating:** 225 A

Notes:

CKT	Circuit Description	Trip	Poles	A		B		C		Poles	Trip	Circuit Description	CKT
1	Radial Arm Saw Disconnect Rm. 175	15 A	3	2106	8300					3	60 A	Pwr. Receptacle Rm. 170	2
3	--	--	--			2106	8300			--	--	--	4
5	--	--	--					2106	8300	--	--	--	6
7	Spindle Sander Disconnect Rm. 175	20 A	3	2700	2700					3	20 A	Pwr. Receptacle Rm. 170	8
9	--	--	--			2700	2700			--	--	--	10
11	--	--	--					2700	2700	--	--	--	12
13	Drill Press Disconnect Rm. 175	15 A	3	580	2700					3	20 A	Pwr. Receptacle Rm. 170	14
15	--	--	--			580	2700			--	--	--	16
17	--	--	--					580	2700	--	--	--	18
19	Table Saw Disconnect Rm. 175	20 A	3	2500	2700					3	20 A	Pwr. Receptacle Rm. 170	20
21	--	--	--			2500	2700			--	--	--	22
23	--	--	--					2500	2700	--	--	--	24
25	Pwr. Band Saw Disconnect Rm. 161	20 A	3	2500	1330					3	20 A	Pwr. EF-7	26
27	--	--	--			2500	1330			--	--	--	28
29	--	--	--					2500	1330	--	--	--	30
31	Pwr. Receptacle Rm. 175	60 A	3	8300	5820					3	30 A	Pwr. DC-1 Disconnect	32
33	--	--	--			8300	5820			--	--	--	34
35	--	--	--					8300	5820	--	--	--	36
37													38
39													40
41													42
		Total Load:		42236 VA		42236 VA		42236 VA					
		Total Amps:		152 A		152 A		152 A					

Legend:

Load Classification	Connected Load	Demand Factor	Estimated Demand	Panel Totals	
Other	89700 VA	100.00%	89700 VA		
Power	37008 VA	100.00%	37008 VA	**Total Conn. Load:**	126708 VA
				Total Est. Demand:	126708 VA
				Total Conn. Current:	152 A
				Total Est. Demand	152 A

Notes:

Branch Panel: M1

Location: Space 154 **Volts:** 480/277 Wye **A.I.C. Rating:** 65,000
Supply From: MAIN **Phases:** 3 **Mains Type:**
Mounting: Surface **Wires:** 4 **Bus Rating:** 400 A
Enclosure: Type 1 **MCB Rating:** 350 A

Notes:

CKT	Circuit Description	Trip	Poles	A		B		C		Poles	Trip	Circuit Description	CKT
1	Pwr. IDEC-4	20 A	3	3048	17071					3	90 A	Power Space 154	2
3	--	--	--			3048	17071			--	--	--	4
5	--	--	--					3048	17071	--	--	--	6
7	Pwr. IDEC-3	20 A	3	3048									8
9	--	--	--			3048							10
11	--	--	--					3048					12
13	Pwr. IDEC-2	20 A	3	3048									14
15	--	--	--			3048							16
17	--	--	--					3048					18
19	Pwr. IDEC-1	20 A	3	2106									20
21	--	--	--			2106							22
23	--	--	--					2106					24
25	Pwr. IDEC-5	20 A	3	2106									26
27	--	--	--			2106							28
29	--	--	--					2106					30
31	Pwr. IDEC-6	20 A	3	3048									32
33	--	--	--			3048							34
35	--	--	--					3048					36
37	Pwr. ACC-1	20 A	3	2328									38
39	--	--	--			2328							40
41	--	--	--					2328					42
		Total Load:		35803 VA		35803 VA		35803 VA					
		Total Amps:		129 A		129 A		129 A					

Legend:

Load Classification	Connected Load	Demand Factor	Estimated Demand	Panel Totals	
Power	107409 VA	100.00%	107409 VA		
				Total Conn. Load:	107409 VA
				Total Est. Demand:	107409 VA
				Total Conn. Current:	129 A
				Total Est. Demand	129 A

Notes:

REGISTERED PROFESSIONAL ENGINEER
FRANK KAISER
No. E015151
Exp. 6-30-12
ELECTRICAL
STATE OF CALIFORNIA

DONN C. GILMORE & ASSOCIATES, INC.
Consulting Mechanical and Electrical Engineers
DCGA
4051 E. La Palma Ave., Ste. A
Anaheim, CA. 92807
Ph.: 714.630.4291
Fax: 714.630.4805

DATE	SYM	REVISION	BY	A'PD

NATIONAL AERONAUTICS AND SPACE ADMINISTRATION
DRYDEN FLIGHT RESEARCH CENTER
EDWARDS, CA

DRAWING TITLE
ELECTRICAL SCHEDULES

PROJECT TITLE
8-18-11
FACILITIES SUPPORT CENTER
100% FINAL DESIGN SUBMITTAL

APPROVALS	DATE
Chief, Facilities Engineering & Asset Mgmt. Office **DAN CROWLEY**	
Project Requestor /Custom **DAN CROWLEY**	8-18-11
Facilities Project Manager **GEMMA FLORES**	8-18-11
Chief, Office of Protective Services **JOHN ZELLMER**	8-18-11
Chief - Safety, Health, and Environmental Office **DAN MULLEN**	8-18-11
DFRC Chief Information Officer **KEN NORLIN**	8-18-11

DATE STRTD	11/04/10	DATE PRNTD	05/23/11
DRAWN BY			EDM-1703
SCALE	AS NOTED	TRADE SH. No.	
FILE NAME		E0.3	SHEET No. 159 of 195

Branch Panel: P1

Location: Space 154 | **Volts:** 120/208 Wye | **A.I.C. Rating:** 42,000
Supply From: DSP | **Phases:** 3 | **Mains Type:**
Mounting: Surface | **Wires:** 4 | **Bus Rating:** 225 A
Enclosure: Type 1 | **MCB Rating:** 150 A

Notes:

CKT	Circuit Description	Trip	Poles	A		B		C		Poles	Trip	Circuit Description	CKT
1	Pwr. Mezzanine Rm. 200 (5)	20 A	1	900	1440					1	20 A	Pwr. Roof Recep (7)	2
3	Pwr. Mezzanine Rm. 200 (5)	20 A	1			1080	360			1	20 A	Pwr. fire Dampers	4
5	Pwr. IDEC-1 Ltg, Recep	20 A	1					1500	180	1	20 A	Pwr. EF-6, Roof Recep.	6
7	Pwr. IDEC-4 Ltg, Recep	20 A	1	1500	180					1	20 A	Pwr. Boiler #1	8
9	Pwr. IDEC-2 Ltg, Recep	20 A	1			1500	180			1	20 A	Pwr. Boiler #2	10
11	Pwr. IDEC-3 Ltg, Recep	20 A	1					1500	901	3	20 A	Pwr. CHWP-1	12
13	Pwr. IDEC-6 Ltg, Recep	20 A	1	1500	901					--	--	--	14
15	Pwr. IDEC-5 Ltg, Recep	20 A	1			1500	901			--	--	--	16
17	Pwr. ACC-1 Cont. Pwr	20 A	1					200	793	3	20 A	Pwr. HHPW-1	18
19	Pwr. EF-13	20 A	1	1176	793					--	--	--	20
21							793			--	--	--	22
23									793	3	20 A	Pwr. HHPW-2	24
25					793					--	--	--	26
27							793			--	--	--	28
29													30
31													32
33													34
35													36
37													38
39													40
41													42
		Total Load:		9183 VA		7107 VA		5867 VA					
		Total Amps:		77 A		59 A		49 A					

Legend:

Load Classification	Connected Load	Demand Factor	Estimated Demand	Panel Totals	
HVAC	1176 VA	100.00%	1176 VA		
Other	720 VA	100.00%	720 VA	Total Conn. Load:	22157 VA
Power	20261 VA	100.00%	20261 VA	Total Est. Demand:	22157 VA
				Total Conn. Current:	62 A
				Total Est. Demand	62 A

Notes:

Branch Panel: P2

Location: Space 140 | **Volts:** 120/208 Wye | **A.I.C. Rating:** 42,000
Supply From: DSP | **Phases:** 3 | **Mains Type:**
Mounting: Surface | **Wires:** 4 | **Bus Rating:** 225 A
Enclosure: Type 1 | **MCB Rating:** 150 A

Notes:

CKT	Circuit Description	Trip	Poles	A		B		C		Poles	Trip	Circuit Description	CKT
1	Pwr. Recep. Rm's 100,101,105,106,107	20 A	1	1080	720					1	20 A	Pwr. Rm's 112,113,114,115,171,172 (6)	2
3	Pwr. Rm's 100,101,106,107 (6)	20 A	1			1080	900			1	20 A	Pwr. Rm's 111,112,114,115,171 (6)	4
5	Pwr. Recep. Rm's 100,101,103 (3)	20 A	1					720	540	1	20 A	Pwr. rm's 111,113,171 (5)	6
7	Pwr. Rm. 102 (2 Refrigerator's)	20 A	1	1200	360					1	20 A	Pwr. Comm Rm 112 (1)	8
9	Pwr. Rm. 102 (Vending Machine)	20 A	1			1200	1200			1	20 A	Pwr. Rm. 102 (Vending Machine)	10
11	Pwr. Rm.102 (Vending Machine)	20 A	1					1200	1200	1	20 A	Pwr. Rm. 102 (Vending Machine)	12
13	Pwr. Garbage Disposal Rm. 102 (1)	20 A	1	1650	1200					1	20 A	Pwr. Rm. 102 (Microwave)	14
15	Pwr. Recep. Rm. 102 (3)	20 A	1			540	1200			1	20 A	Pwr. Rm. 102 (Microwave)	16
17	Pwr. Recep. Rm. 120 (3)	20 A	1					540	1200	2	20 A	Pwr. CU-1 (Roof)	18
19					1200					--	--	--	20
21	Per. Rm. 101 (Pendent Mounted)	20 A	1			180	180			1	20 A	Pwr. Rm. 111 (ELCP)	22
23	Pwr. Rm. 111 (LCP4)	20 A	1					180					24
25													26
27													28
29													30
31													32
33													34
35													36
37													38
39													40
41													42
		Total Load:		7410 VA		6480 VA		5580 VA					
		Total Amps:		62 A		54 A		47 A					

Legend:

Load Classification	Connected Load	Demand Factor	Estimated Demand	Panel Totals	
Other	540 VA	100.00%	540 VA		
Power	18570 VA	100.00%	18570 VA	Total Conn. Load:	19110 VA
				Total Est. Demand:	19110 VA
				Total Conn. Current:	53 A
				Total Est. Demand	53 A

Notes:

Branch Panel: P3

Location: Space 36 | **Volts:** 120/208 Wye | **A.I.C. Rating:** 42,000
Supply From: DSP | **Phases:** 3 | **Mains Type:**
Mounting: Surface | **Wires:** 4 | **Bus Rating:** 225 A
Enclosure: Type 1 | **MCB Rating:** 150 A

Notes:

CKT	Circuit Description	Trip	Poles	A		B		C		Poles	Trip	Circuit Description	CKT
1	Pwr. Rm's 124,125,126,127,128 (6)	20 A	1	1080	540					1	20 A	Pwr. Cubicle Rm. 120 (3)	2
3	Pwr. Rm's 123,124,125,126,127,128 (6)	20 A	1			1260	720			1	20 A	Pwr. Cubicle Rm. 120 (4)	4
5	Pwr. Rm's 123,124,125,126, 127,128 (6)	20 A	1					1080	900	1	20 A	Pwr. Cubicle Rm. 120 (5)	6
7	Pwr. Rm's 121,122,123 (4)	20 A	1	720	900					1	20 A	Pwr. Cubicle Rm. 120 (5)	8
9	Pwr. Rm's 121,122,123 (6)	20 A	1			1080	900			1	20 A	Pwr. Cubicle Rm. 120 (5)	10
11	Pwr. Copy Rm (1)	20 A	1					600	900	1	20 A	Pwr. Cubicle Rm. 120 (5)	12
13	Pwr. Rm. 120 (1)	20 A	1	180	720					1	20 A	Pwr. Cubicle Rm. 120 (4)	14
15	Pwr. ACCU-1 A	60 A	3			3483	720			1	20 A	Pwr. Cubicle Rm. 120 (4)	16
17	--	--	--					3483	1080	1	20 A	Pwr. Cubicle Rm. 120 (6)	18
19	--	--	--	3483	1080					1	20 A	Pwr. Cubicle Rm. 120 (6)	20
21	Pwr. EF-1, EF-3, Recep	20 A	1			360	900			1	20 A	Pwr. Cubicle Rm. 120 (5)	22
23	Pwr. FC-1,FC-2,FC-3	20 A	2					306	900	1	20 A	Pwr. Cubicle Rm. 120 (5)	24
25	--	--	--	306	520					3	20 A	Pwr. IDEC-9	26
27	Pwr. ACCU-1 B	20 A	3			3483	520			--	--	--	28
29	--	--	--					3483	520	--	--	--	30
31	--	--	--	3483	180					1	20 A	Pwr. Rm. 121 (LCP3)	32
33	Pwr. for Soler Tube Damper (7)	20 A	1			1260	180			1	20 A	Pwr. Recep. Ceiling Rm. 128	34
35													36
37													38
39													40
41													42
		Total Load:		13192 VA		14866 VA		13252 VA					
		Total Amps:		110 A		124 A		110 A					

Legend:

Load Classification	Connected Load	Demand Factor	Estimated Demand	Panel Totals	
Other	1440 VA	100.00%	1440 VA		
Power	39510 VA	100.00%	39510 VA	Total Conn. Load:	41130 VA
Receptacle	180 VA	100.00%	180 VA	Total Est. Demand:	41130 VA
				Total Conn. Current:	114 A
				Total Est. Demand	114 A

Notes:

Branch Panel: P4

Location: | **Volts:** 120/208 Wye | **A.I.C. Rating:** 42,000
Supply From: DSP | **Phases:** 3 | **Mains Type:**
Mounting: Surface | **Wires:** 4 | **Bus Rating:** 225 A
Enclosure: Type 1 | **MCB Rating:** 150 A

Notes:

CKT	Circuit Description	Trip	Poles	A		B		C		Poles	Trip	Circuit Description	CKT
1	Pwr. Rm's 132,133,134,135,136,137 (6)	20 A	1	1080	720					1	20 A	Pwr. Cubicle Rm. 130 (4)	2
3	Pwr. Rm's 133,134,135,136,137 (6)	20 A	1			1260	720			1	20 A	Pwr. Cubicle Rm. 130 (4)	4
5	Pwr. Rm's 132,133,134,135,136,137 (6)	20 A	1					1080	1080	1	20 A	Pwr. Cubicle Rm. 130 (6)	6
7	Pwr. Rm's 131,132 (3)	20 A	1	360	1080					1	20 A	Pwr. Cubicle Rm. 130 (6)	8
9	Pwr. Rm's 131,132 (3)	20 A	1			540	1080			1	20 A	Pwr. Cubicle Rm. 130 (6)	10
11	Pwr. Copy Rm. 131 (1)	20 A	1					600	900	1	20 A	Pwr. Cubicle Rm. 130 (5)	12
13	Pwr. EF-2, EF-4, Recep	20 A	1	360	1080					1	20 A	Pwr. Cubicle Rm. 130 (6)	14
15	Pwr. FC-4, FC-5,FC-6	20 A	2			286	1080			1	20 A	Pwr. Cubicle Rm. 130 (6)	16
17	--	--	--					286	1080	1	20 A	Pwr. Cubicle Rm. 130 (6)	18
19	Pwr. IDEC-7	20 A	3	319	1080					1	20 A	Pwr. Cubicle Rm. 130 (6)	20
21	--	--	--			319	180			1	20 A	Pwr. Recep. Rm. 130 (1)	22
23	--	--	--					319	180	1	20 A	Pwr. Rm. 130 (1)	24
25	Pwr. EF-8	20 A	1	1176									26
27	Pwr. CU-2 (Roof)	20 A	2			1200	360			1	20 A	Pwr. Telephone Board Rm. 131A	28
29	--	--	--					1200	360	1	20 A	Pwr. Telephone Board Rm. 131A	30
31	Pwr. Rm. 131 (LCP2)	20 A	1	180	1080					1	20 A	Pwr. for Soler tub Dampers (6)	32
33	Pwr. Recp. Ceiling Rm. 137	20 A	1			180							34
35													36
37													38
39													40
41													42
		Total Load:		8515 VA		7205 VA		7085 VA					
		Total Amps:		71 A		60 A		59 A					

Legend:

Load Classification	Connected Load	Demand Factor	Estimated Demand	Panel Totals	
Other	1260 VA	100.00%	1260 VA		
Power	21185 VA	100.00%	21185 VA	Total Conn. Load:	22625 VA
Receptacle	180 VA	100.00%	180 VA	Total Est. Demand:	22625 VA
				Total Conn. Current:	63 A
				Total Est. Demand	63 A

Notes:

REGISTERED PROFESSIONAL ENGINEER
KURT KAISER
No. E015151
Exp. 6-30-12
ELECTRICAL
STATE OF CALIFORNIA

DONN C. GILMORE & ASSOCIATES, INC.
Consulting Mechanical and Electrical Engineers
DCGA
4051 E. La Palma Ave., Ste. A
Anaheim, CA 92807
Ph.: 714.630.4291
Fax: 714.630.4805

DATE	SYM	REVISION	BY	A'PD

NATIONAL AERONAUTICS AND SPACE ADMINISTRATION
DRYDEN FLIGHT RESEARCH CENTER
EDWARDS, CA

DRAWING TITLE
ELECTRICAL SCHEDULES

PROJECT TITLE
8-18-11
FACILITIES SUPPORT CENTER
100% FINAL DESIGN SUBMITTAL

APPROVALS	DATE
Chief, Facilities Engineering Assessment Office DAN CROWLEY	8-18-11
Project Requestor /Customer DAN CROWLEY	8-18-11
Facilities Project Manager GEMMA FLORES	8-18-11
Chief, Office of Protective Services JOHN ZELLMER	8-18-11
Chief - Safety, Health, and Environmental Office DAN MULLEN	8-18-11
DFRC Chief Information Officer KEN NORLIN	8-18-11

DATE STRTD	11/04/10	DATE PRNTD	05/23/11
DRAWN BY		EDM-1703	
SCALE	AS NOTED	TRADE SH. No.	
FILE NAME		E0.4	SHEET No. 160 of 195