WEIGHTS:	STEEL BASE 110 lbs.	EQUIPMENT 1600 lbs.	FOR SPRING MOUNT DATA SEE: WF-26229-SLF
		CONCRETE 1185 lbs.	
2.0" SPECIFIED DEFLECTION		TOTAL 2895 lbs.	FOR SNUBBER DATA SEE: WF-26229-Z1225

Typical Base Layout- For Actual Locations See Plan View Below.

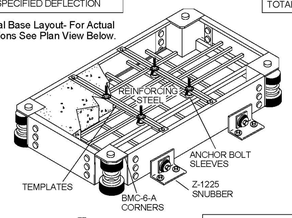

ANCHOR BOLT SLEEVE DETAIL

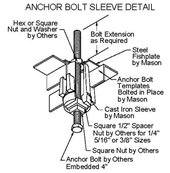

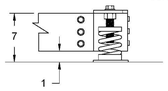

Z1225-500 Anchorage Requirements:
(2) 1/2" Dia. Hilti Kwik Bolt TZ Anchors
3 5/8" Embedment; 6" Edge Distance
3000 psi Stone Aggregate Concrete

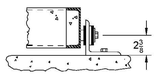

Supplied By MASON IND.

Yes	No	
■	□	BASE
■	□	TEMPLATE
■	□	ANCHOR BOLT SLEEVES AND FISHPLATE
□	■	LOOSE REINFORCING STEEL
■	□	WELDED REINFORCING STEEL

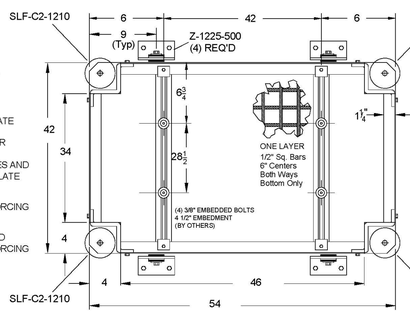

ANCHOR BOLT INSTALLATION INSTRUCTIONS

1. BMK Bases ordered with Anchor Bolt Templates are furnished with Templates already bolted in place.
2. The Mounting Carton contains the necessary number of cast iron sleeves and fishplates shown in position on the base drawing.
3. Fabricate embedded anchor bolts and bolt in position in locations shown on the drawings before pouring concrete.

MINIMUM HK PAD SIZE:62x62 (LxW)

CH-1 EQUIPMENT ANCHORAGE DETAIL

SCALE: NONE | 1 | M2.3 | M6.4

EQUIPMENT ANCHORAGE DETAILS

UNIT: TRANE CAUUC40
WEIGHT OF EQUIPMENT: 2395 LBS

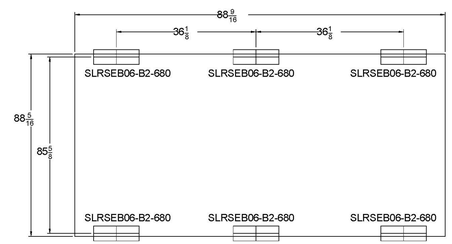

TOP VIEW

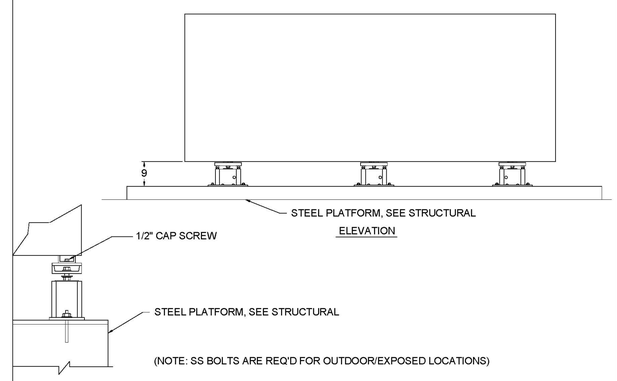

ELEVATION

(NOTE: SS BOLTS ARE REQ'D FOR OUTDOOR/EXPOSED LOCATIONS)

ACC-1 EQUIPMENT ANCHORAGE DETAIL

SCALE: NONE | 2 | M4.0 | M6.4

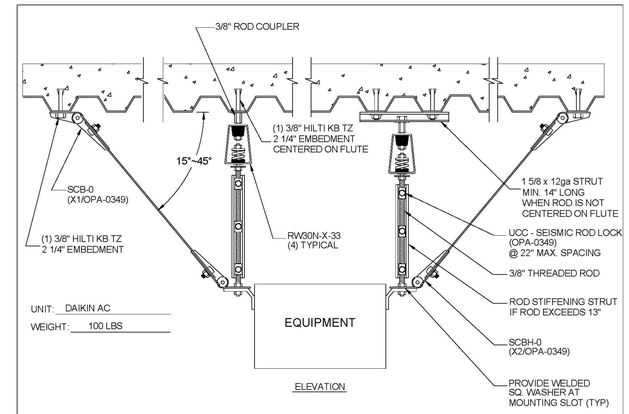

UNIT: DAIKIN AC
WEIGHT: 100 LBS

ELEVATION

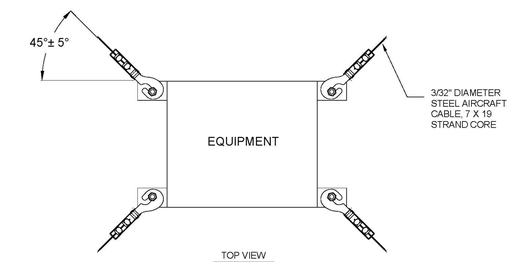

TOP VIEW

FAN COIL SUPPORT DETAIL

SCALE: NONE | 3 | M2.1 | M6.4

DONN C. GILMORE & ASSOCIATES, INC.
Consulting Mechanical and Electrical Engineers
DCGA
4051 E. La Palma Ave., Ste. A
Anaheim, CA 92807
Ph.: 714.630.4291
Fax: 714.630.4805

REGISTERED PROFESSIONAL ENGINEER DONN C. GILMORE No. 11164 Exp. 9-30-11 MECHANICAL STATE OF CALIFORNIA

DATE	SYM	REVISION	BY	A'PD

NATIONAL AERONAUTICS AND SPACE ADMINISTRATION
DRYDEN FLIGHT RESEARCH CENTER
EDWARDS, CA

DRAWING TITLE
MECHANICAL DETAILS

PROJECT TITLE
8-18-11
FACILITIES SUPPORT CENTER
100% FINAL DESIGN SUBMITTAL

APPROVALS	DATE
Chief, Facilities Engineering Assist Mgr Office DAN CROWLEY	8-18-11
Project Requestor /Custodian DAN CROWLEY	8-18-11
Facilities Project Manager GEMMA FLORES	8-18-11
Chief, Office of Protective Services JOHN ZELLMER	8-18-11
Chief - Safety, Health, and Environmental Office DAN MULLEN	8-18-11
DFRC Chief Information Officer KEN NORLIN	8-18-11

DATE STRTD	11/04/10	DATE PRINTD	05/23/11
DRAWN BY			EDM-1703
SCALE	AS NOTED	TRADE SH. No.	
FILE NAME		M6.4	SHEET No. 131 of 195

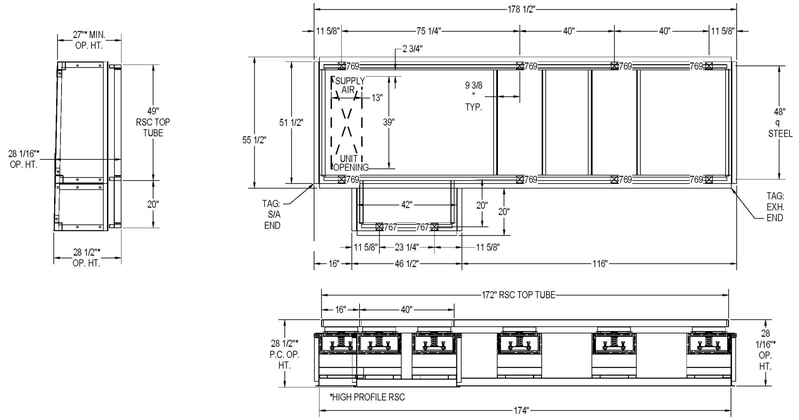

NOTE: SUPPLY DUCTING TO BE SUPPORTED OFF BOTTOM OF UNIT.

WEIGHT OF CURB = 880 LBS

IDEC-1, IDEC-2, AND IDEC-3 MOUNTING DETAIL

SCALE: 3/8" = 1'-0" | 1 | M4.1 | M6.5

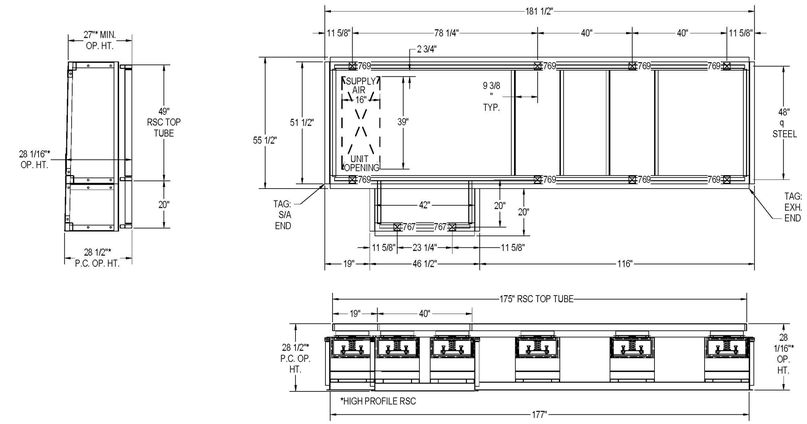

NOTE: SUPPLY DUCTING TO BE SUPPORTED OFF BOTTOM OF UNIT.

WEIGHT OF CURB = 880 LBS

IDEC-4 MOUNTING DETAIL

SCALE: 3/8" = 1'-0" | 2 | M4.1 | M6.5

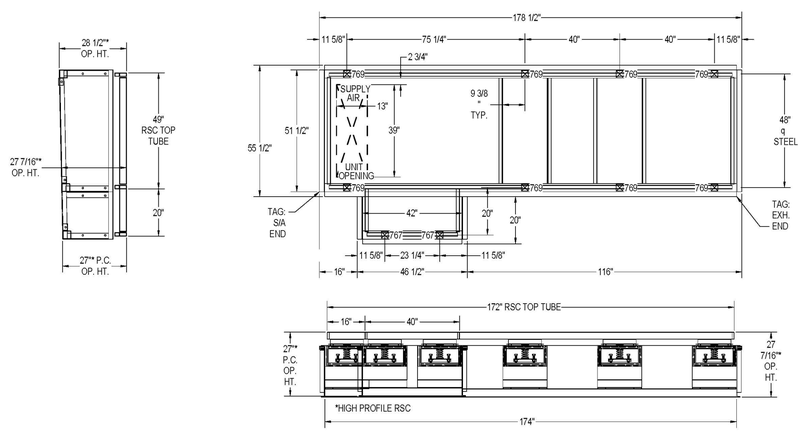

NOTE: SUPPLY DUCTING TO BE SUPPORTED OFF BOTTOM OF UNIT.

WEIGHT OF CURB = 1,200 LBS

IDEC-5 MOUNTING DETAIL

SCALE: 3/8" = 1'-0" | 3 | M4.1 | M6.5

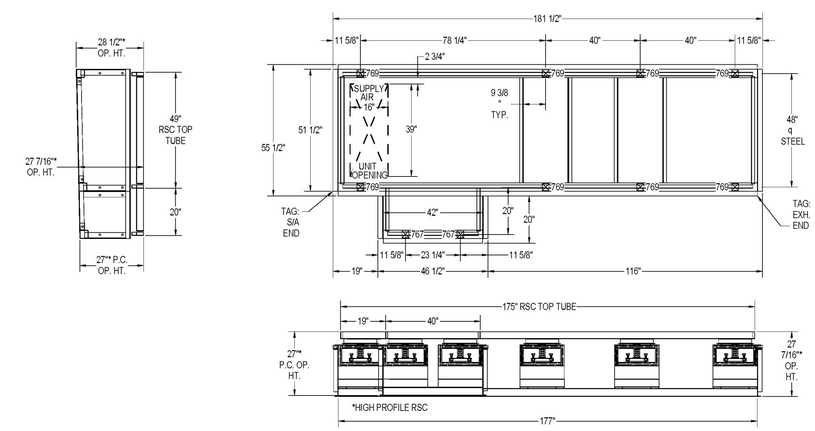

NOTE: SUPPLY DUCTING TO BE SUPPORTED OFF BOTTOM OF UNIT.

WEIGHT OF CURB = 1,200 LBS

IDEC-6 MOUNTING DETAIL

SCALE: 3/8" = 1'-0" | 4 | M4.1 | M6.5

REGISTERED PROFESSIONAL ENGINEER DONN C. GILMORE No. 11641 Exp. 9-30-11 MECHANICAL STATE OF CALIFORNIA

DONN C. GILMORE & ASSOCIATES, INC.
Consulting Mechanical and Electrical Engineers
DCGA
4051 E. La Palma Ave., Ste. A
Anaheim, CA. 92807
Ph.: 714.630.4291
Fax: 714.630.4805

DATE	SYM	REVISION	BY	A'PD

NATIONAL AERONAUTICS AND SPACE ADMINISTRATION

DRYDEN FLIGHT RESEARCH CENTER
EDWARDS, CA

DRAWING TITLE

MECHANICAL DETAILS

PROJECT TITLE

8-18-11
FACILITIES SUPPORT CENTER
100% FINAL DESIGN SUBMITTAL

APPROVALS	DATE
Chief, Facilities Engineering & Asset Mgmt. Office DAN CROWLEY	8-18-11
Project Requestor /Customer DAN CROWLEY	8-18-11
Facilities Project Manager GEMMA FLORES	8-18-11
Chief, Office of Protective Services JOHN ZELLMER	8-18-11
Chief - Safety, Health, and Environmental Office DAN MULLEN	8-18-11
DFRC Chief Information Officer KEN NORLIN	8-18-11

DATE STRTD	11/04/10	DATE PRNTD	05/23/11
DRAWN BY		EDM-1703	
SCALE	AS NOTED	TRADE SH. No.	M6.5
FILE NAME		SHEET No. 132 of 195	

UCC - SEISMIC ROD CLAMPS FOR STRUT CHANNELS

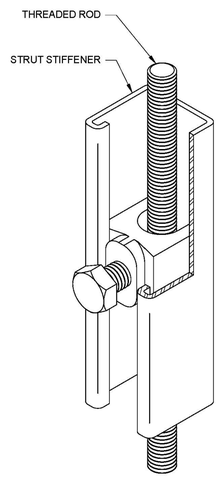

TYPE UCC WITH STEEL STRUT ASSEMBLY RATINGS

Rod Size in (mm)	Maximum Compressive Force lbs (kN)	Strut Stiffener: Minimum Size in (mm)	Strut Stiffener: Max Length in (mm)	Maximum UCC Spacing in (mm)
3/8 (10)	425 (1.9)	1 5/8 x 1 5/8 x 12 Gage (41 x 41 x 2.5)	96 (2438)	22 (559)
1/2 (13)	1275 (5.6) 1200 (5.3)	1 5/8 x 1 5/8 x 12 Gage (41 x 41 x 2.5) 1 5/8 x 1 5/8 x 12 Gage (41 x 41 x 2.5)	(2438) 120 96	(787) 31 39 (787)
5/8 (16)	1475 (6.5) 1325 (5.9)	1 5/8 x 1 5/8 x 12 Gage (41 x 41 x 2.5) 1 5/8 x 1 5/8 x 12 Gage (41 x 41 x 2.5)	(3048) (2438) 120	(991) 39
3/4 (19)	2500 (11.1)	1 5/8 x 1 5/8 x 12 Gage (41 x 41 x 2.5)	(3048) (3658)	(991) 48 (1212)

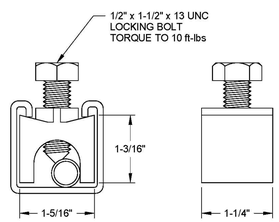

APPROVED
Fixed Equipment Anchorage
Office of Statewide Health Planning and Development
OPA-0349
on
January 16, 2009
Anthony R. Pike (916) 440-8470

Page **X5C**

Dhiru Mali
Structural Engineer
California SE No. 2811

SEISMIC ROD CLAMP DETAIL

SCALE: NONE | 3 M6.6 M6.6

SCB - SEISMIC CABLE BRACE

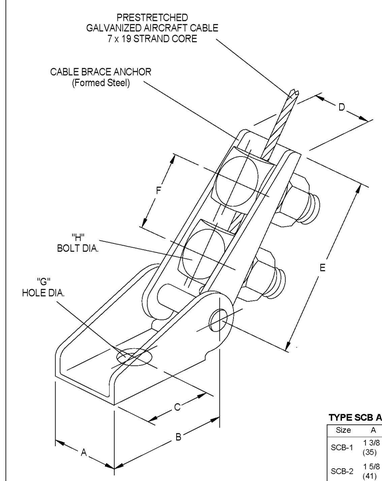

TYPE SCB ASSEMBLY RATINGS AS CONTROLLED BY CABLE BREAKING STRENGTH

Size	Cable Dia. in (mm)	OSHPD Max. Ratings lbs (kN)	Minimum Torque on Bolts ft-lbs (N-m)
SCB-1	1/8 (3)	975 (4.3)	25 (34)
SCB-2	3/16 (5)	2050 (9.1)	45 (61)
SCB-3	1/4 (6)	3150 (14.0)	55 (75)
SCB-4	3/8 (10)	6875 (30.5)	200 (271)

TYPE SCB ANCHOR DIMENSIONS - inches (mm)

Size	A	B	C	D	E	F	G	H
SCB-1	1 3/8 (35)	2 (51)	1 (25)	15/16 (24)	3 3/8 (86)	1 1/2 (38)	9/16 (14)	1/2 (13)
SCB-2	1 5/8 (41)	2 3/4 (70)	1 3/8 (35)	1 3/16 (30)	4 3/8 (111)	1 3/4 (45)	11/16 (17)	5/8 (16)
SCB-3	2 (51)	3 1/2 (89)	1 3/4 (45)	1 7/16 (37)	4 3/4 (121)	2 (51)	13/16 (21)	3/4 (19)
SCB-4	3 1/8 (79)	5 (127)	2 1/2 (64)	1 15/16 (49)	5 3/4 (146)	2 1/4 (57)	1 5/16 (33)	1 (25)

APPROVED
California Office of Statewide Health Planning and Development
FIXED EQUIPMENT ANCHORAGE
OPA-0349 August 5, 2002
*Valid for 3 Years Maximum
Bill Staehlin (916) 654-3362

Dhiru Mali
Structural Engineer
California SE No. 2811

Page **X1**

SEISMIC CABLE BRACE DETAIL

SCALE: NONE | 2 M6.6 M6.6

SCBH - SEISMIC CABLE BRACE WITH HOOK ATTACHMENT

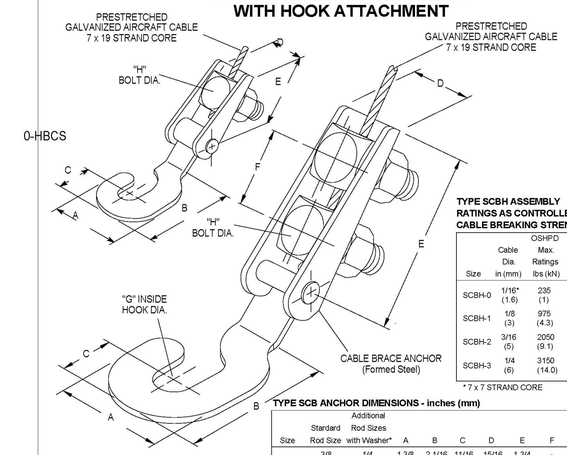

TYPE SCBH ASSEMBLY RATINGS AS CONTROLLED BY CABLE BREAKING STRENGTH

Size	Cable Dia. in (mm)	OSHPD Max. Ratings lbs (kN)	Minimum Torque on Bolts ft-lbs (N-m)
SCBH-0	1/16* (1.6)	235 (1)	30 (41)
SCBH-1	1/8 (3)	975 (4.3)	25 (34)
SCBH-2	3/16 (5)	2050 (9.1)	45 (61)
SCBH-3	1/4 (6)	3150 (14.0)	55 (75)

* 7 x 7 STRAND CORE

TYPE SCB ANCHOR DIMENSIONS - inches (mm)

Size	Stardard Rod Size	Additional Rod Sizes with Washer*	A	B	C	D	E	F	G	H
SCBH-0	3/8 (10)	1/4 (6)	1 3/8 (35)	2 1/16 (52)	11/16 (18)	15/16 (24)	1 3/4 (45)	- (-)	3/8 (10)	1/2 (13)
SCBH-1	5/8 (16)	3/8 to 1/2 (10 to 13)	1 7/8 (48)	2 3/8 (60)	1 (25)	1 (25)	3 3/8 (86)	1 1/2 (38)	5/8 (16)	1/2 (13)
SCBH-2	7/8 (22)	1/2 to 3/4 (13 to 19)	2 7/8 (73)	3 3/4 (95)	1 3/8 (35)	1 3/16 (30)	4 3/8 (111)	1 3/4 (45)	7/8 (22)	5/8 (16)
SCBH-3	1 1/8 (29)	5/8 to 1 (16 to 25)	3 1/2 (89)	4 3/4 (121)	1 3/4 (44)	1 7/16 (37)	4 3/4 (121)	2 (51)	1 1/8 (29)	3/4 (19)

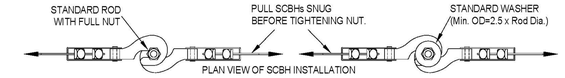

APPROVED
California Office of Statewide Health Planning and Development
FIXED EQUIPMENT ANCHORAGE
OPA-0349 August 5, 2002
*Valid for 3 Years Maximum
Bill Staehlin (916) 654-3362

Page **X2**

Dhiru Mali
Structural Engineer
California SE No. 2811

SEISMIC CABLE BRACE WITH HOOK DETAIL

SCALE: NONE | 1 M6.6 M6.6

REGISTERED PROFESSIONAL ENGINEER DONN C. GILMORE No. 11564 Exp. 9-30-11 MECHANICAL STATE OF CALIFORNIA

DONN C. GILMORE & ASSOCIATES, INC.
Consulting Mechanical and Electrical Engineers
DCGA
4051 E. La Palma Ave., Ste. A
Anaheim, CA 92807
Ph.: 714.630.4291
Fax: 714.630.4805

DATE	SYM	REVISION	BY	A'PD

NATIONAL AERONAUTICS AND SPACE ADMINISTRATION
DRYDEN FLIGHT RESEARCH CENTER
EDWARDS, CA

DRAWING TITLE
MECHANICAL DETAILS

PROJECT TITLE
8-18-11
FACILITIES SUPPORT CENTER
100% FINAL DESIGN SUBMITTAL

APPROVALS	DATE
Chief, Facilities Engineering Branch, Asset Mgmt Office DAN CROWLEY	8-18-11
Project Requestor /Customer DAN CROWLEY	8-18-11
Facilities Project Manager GEMMA FLORES	8-18-11
Chief, Office of Protective Services JOHN ZELLMER	8-18-11
Chief - Safety, Health, and Environmental Office DAN MULLEN	8-18-11
DFRC Chief Information Officer KEN NORLIN	8-18-11

DATE STRTD	11/04/10	DATE PRINTD	05/23/11
DRAWN BY		EDM-1703	
SCALE	AS NOTED	TRADE SH. No.	M6.6
FILE NAME		SHEET No. 133 of 195	

TYPE
RW30N
1" Deflection
X, A, B, C, D & F
Spring Series Hangers
With Rebound Washers

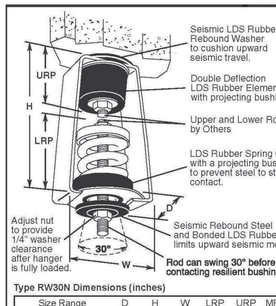

Type RW30N Dimensions (inches)

Size Range	D	H	W	LRP	URP	MRD
RW30N-X-23-210	2 1/2	5 1/2	2 7/8	3 1/4	1 3/4	3/8
RW30N-A-12-25	2 3/4	6 3/4	3 1/4	3 1/4	2 1/4	5/8
RW30N-A-41-95	2 3/4	6 3/4	3 1/4	3 5/8	2 1/4	5/8
RW30N-B-138-540	4	6 3/4	4 3/4	3 3/4	2 3/4	5/8
RW30N-C-630-1265	4 3/4	9	5 1/4	5	3	3/4
RW30N-D-1575-2150	4 3/4	12 1/2	5 3/4	7	4 1/4	7/8
RW30N-F-2760	6	14 1/2	6 1/4	7	5	7/8

LRP– Lower Rod Penetration
URL– Upper Rod Penetration
MRD– Maximum Rod Diameter

TYPE RW30N RATINGS

Size	Rated Capacity [lbs]	Rated Defl.* [in]	Spring Constant** [lbs/in]	Avg Defl. LDS Rubber [in]	Spring Color
RW30N-X-12	12	1.25	10□	0.20	Orange
RW30N-X-23	23	1.50	18		Brown
RW30N-X-33	33	1.30	30		Red
RW30N-X-54	54	1.40	45		White
RW30N-X-76	76	1.22	73		Black
RW30N-X-113	113	1.20	113		Yellow
RW30N-X-130	130	1.20	130		Purple
RW30N-X-175	175	1.20	175		Silver
RW30N-X-210	210	1.20	210		Blue
RW30N-A-12	12	1.35	12	0.35	Red
RW30N-A-18	18	1.35	18		Gray
RW30N-A-25	25	1.35	25		Orange
RW30N-A-41	41	1.53	35		Pink
RW30N-A-56	56	1.49	49		Black
RW30N-A-73	73	1.41	69		Tan
RW30N-A-95	95	1.36	94		Green
RW30N-B-138	138	1.67	105	0.35	White
RW30N-B-222	222	1.51	191		Blue
RW30N-B-278	278	1.44	255		Purple
RW30N-B-336	336	1.35	336		Silver
RW30N-B-410	410	1.42	385		Black
RW30N-B-540	540	1.35	540		Yellow
RW30N-C-630	630	1.53	558	0.40	Gray
RW30N-C-800	800	1.40	800		Orange
RW30N-C-1010	1010	1.50	920		Green
RW30N-C-1265	1265	1.40	1265		Red
RW30N-D-1575	1575	1.63	1280	0.40	Pink
RW30N-D-2150	2150	1.43	2095		Purple
RW30N-F-2760	2760	1.40	2760	0.40	Silver

*includes double deflection LDS Rubber element.
**applies to spring only.
All springs have additional travel to solid equal to 50% of Rated Deflection.
Hanger elements have straight line deflection curves.

CERTIFICATION DATA

_____ inch SPECIFIED DEFLECTION

TAG : _____
UNIT : _____
PLAN VIEW OF HANGER LOCATION:

1 :	6 :
2 :	7 :
3 :	8 :
4 :	9 :
5 :	10 :
Material for One Set :	Sets Required

DWN : | CHKD: | DATE :
DWG NO. :

FORM S-664 10/06

PIPE SPRING HANGER
SCALE: NONE | 1 | M6.4 | M6.7

TYPE
SLF
2" Deflection
B, B2, C2 & 2-C2
Series Mountings

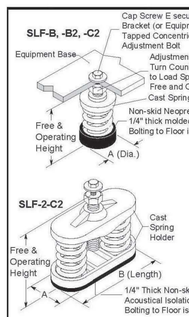

TYPE SLF DIMENSIONS (inches)

Size	Free & Oper. Height	A	B	Locking Cap Screw
SLF-B & B2	6 3/4	2 3/4	-	1/2 × 1 1/4
SLF-C2	6 3/4	3 1/4	-	1/2 × 1 1/4
SLF-2-C2	6 3/4	3 1/4	7 3/4	1/2 × 1 1/4

SPRING DATA

Spring OD	Free HT	Ratio K_1/K_2	Ratio OD/OH
2 3/8	4 - 4 1/2	0.55 - 0.90	0.79 - 1.18
2 7/8	5	0.63 - 0.85	0.96 - 1.15

TYPE SLF RATINGS

Size	Standard Ratings: Rated Capacity [lbs]	Rated Defl. [in]	Mount Constant [lbs/in]	Spring Color/Stripe	Ratings at 50% additional travel to solid: Capacity [lbs]	Defl. [in]
SLF-B-20	20	2.40	8	Tan	20	2.40
SLF-B-26	26	2.18	12	White/Blue	26	2.18
SLF-B-35	35	2.20	16	Purple	35	2.20
SLF-B-50	50	2.20	24	White/Red	50	2.20
SLF-B-65	65	2.10	31	Brown	65	2.10
SLF-B-85	85	2.10	40	White/Black	85	2.10
SLF-B-115	115	2.00	57	Silver	115	2.00
SLF-B-150	150	2.00	75	Orange	150	2.00
SLF-B2-210	210	2.12	99	Silver	210	2.12
SLF-B2-290	290	2.00	144	Blue	290	2.00
SLF-B2-450	450	2.00	224	Tan	410	1.83
SLF-B2-680	680	2.00	340	Gray	565	1.66
SLF-C2-125	125	2.50	50	Purple	125	2.50
SLF-C2-170	170	2.40	70	Brown	170	2.40
SLF-C2-210	210	2.30	90	Red	210	2.30
SLF-C2-260	260	2.20	120	White	260	2.20
SLF-C2-330	330	2.00	165	Black	330	2.00
SLF-C2-460	460	2.00	230	Blue	460	2.00
SLF-C2-610	610	2.00	305	Green	610	2.00
SLF-C2-880	880	2.00	440	Gray	800	1.82
SLF-C2-1210	1210	2.00	605	Silver	1010	1.67
SLF-C2-1540	1540	2.00	770	Gray*	1285	1.67
SLF-C2-1870	1870	2.00	935	Silver*	1560	1.67
SLF-2-C2-340	340	2.40	140	Brown	340	2.40
SLF-2-C2-420	420	2.30	180	Red	420	2.30
SLF-2-C2-520	520	2.20	240	White	520	2.20
SLF-2-C2-660	660	2.00	330	Black	660	2.00
SLF-2-C2-920	920	2.00	460	Blue	920	2.00
SLF-2-C2-1220	1220	2.00	610	Green	1220	2.00
SLF-2-C2-1760	1760	2.00	880	Gray	1600	1.82
SLF-2-C2-2420	2420	2.00	1210	Silver	2020	1.67
SLF-2-C2-3080	3080	2.00	1540	Gray*	2570	1.67
SLF-2-C2-3740	3740	2.00	1870	Silver*	3120	1.67

* with RED core spring

Multiple spring mounts have C size springs. Type SLF-2 has 2 springs. SLF-B2-450, B2-660, C2-880 thru C2-1870 and 2-C2-1760 thru 2-C2-3740 mounts have minimum 25% of rated deflection additional travel to solid. The last two columns show ratings at 50% additional travel.

CERTIFICATION DATA

_____ inch SPECIFIED DEFLECTION

DWN : | CHKD: | DATE :
DWG NO. :

FORM S-262-1b 01/98

SPRING ISOLATOR
SCALE: NONE | 2 | M4.1 | M6.7

TYPE
Z-1225
All Directional
Seismic Snubber
Sizes 250-2000

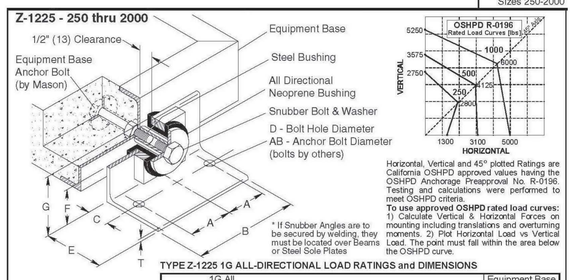

* If Snubber Angles are to be secured by welding, they must be located over Beams or Steel Sole Plates

Horizontal, Vertical and 45° plotted Ratings are California OSHPD approved values having the OSHPD Anchorage Preapproval No. R-0196. Testing and calculations were performed to meet OSHPD criteria.
To use approved OSHPD rated load curves:
1) Calculate Vertical & Horizontal Forces on mounting including translations and overturning moments. 2) Plot Horizontal Load vs Vertical Load. The point must fall within the area below the OSHPD curve.

TYPE Z-1225 1G ALL-DIRECTIONAL LOAD RATINGS and DIMENSIONS

	Size	1G All Directional Load Ratings	A	AB	B	C	D	E	F	G	T	Equipment Base Anchor Bolt Size & Length
U.S.A. or British (lbs. & Inches)	250	250 lbs	2	1/2	5	1 1/2	5/8	3	2 1/8	3 1/2	1/4	1/2"-13UNC-4"
	500	500 lbs	2 3/4	1/2	7	2	5/8	4	2 3/8	4	1/4	5/8"-11UNC-6"
	1000	1000 lbs	3	5/8	8	2 1/2	3/4	5	2 1/2	5	3/8	3/4"-10UNC-6"
	2000	2000 lbs	5	3/4	12	3	7/8	6	3	6	1/2	3/4"-10UNC-6"
Metric (kgs. & mm)	250	113 kgs	51	13	127	38	16	76	54	89	6	1/2"-13UNC-4"
	500	227 kgs	70	13	178	51	16	102	60	102	6	5/8"-11UNC-6"
	1000	454 kgs	76	16	203	64	19	127	64	127	10	3/4"-10UNC-6"
	2000	907 kgs	127	19	305	76	22	152	76	152	13	3/4"-10UNC-6"

NOTES:
1. Neoprene Bushings are 1/4" (6mm) thick throughout.
2. Operating clearances are 1/4" (6mm).
3. Set Base Anchors to protrude 3/4" (19mm) from face to face.
4. A continuous rod, threaded on each end and protruding 3/4" (19mm) from both the faces of the base may be used to secure the threaded steel bushings in lieu of the individual Base Anchor Bolts.
5. Normal clearance between base & floor is 1" (25mm).
6. Distance from Base Anchor Bolt centerline to bottom of base is F minus 1".
7. When 2" clearance between base and floor is specified, use 1" spacer plate under snubber angle.
8. Earthquake restraining angles are to be installed after equipment is in operation to assure design clearances are maintained as follows:
   a. Remove snubber bolt and washer.
   b. Screw steel bushing on Base Anchor Bolt protrusion.
   c. Pass Restraining Angle over steel bushing so it is centered horizontally.
   d. Raise or lower base with spring adjustments or shim Restraining Angle so steel bushing is centered vertically.
   e. Set Restraining Angle so inside vertical face is 1/2" (13mm) clear of base and parallel to it.
   *f. Mark and set AB anchor bolts or weld angle in position.
   g. Replace snubber bolt and washer and tighten in position.

CERTIFICATION DATA

DWN : | CHKD: | DATE :
DWG NO. :

FORM S-101-7ab 04/01

SEISMIC ANCHOR CLIP
SCALE: NONE | 3 | M2.3 | M6.7

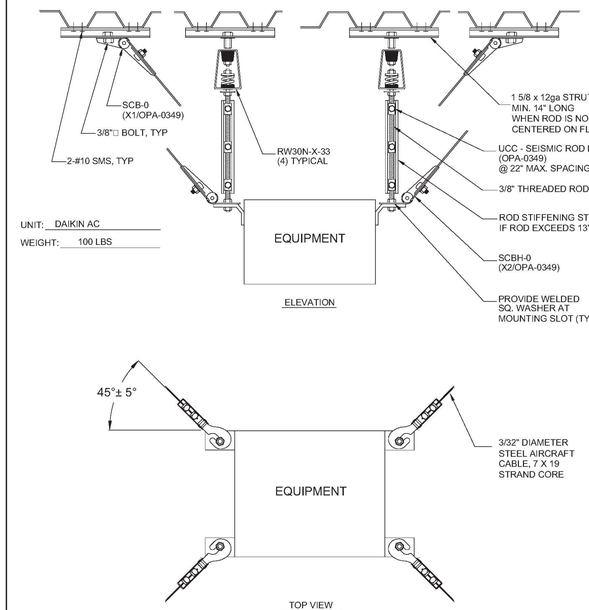

DWN	CHKD	DATE
SH		1/18/11

DWG. NO. WF-26229-04A

FAN COIL MOUNTING DETAIL
SCALE: NONE | 4 | M2.1 | M2.2 | M6.7

REGISTERED PROFESSIONAL ENGINEER — DONN C. GILMORE — No. 11544 — Exp. 9-30-11 — MECHANICAL — STATE OF CALIFORNIA

DONN C. GILMORE & ASSOCIATES, INC.
Consulting Mechanical and Electrical Engineers
DCGA
4051 E. La Palma Ave., Ste. A
Anaheim, CA. 92807
Ph.: 714.630.4291
Fax: 714.630.4805

DATE	SYM	REVISION	BY	A'PD

NATIONAL AERONAUTICS AND SPACE ADMINISTRATION
DRYDEN FLIGHT RESEARCH CENTER
EDWARDS, CA

DRAWING TITLE
MECHANICAL DETAILS

PROJECT TITLE
8-18-11
FACILITIES SUPPORT CENTER
100% FINAL DESIGN SUBMITTAL

APPROVALS	DATE
Chief, Facilities Engineering Division/Project Office DAN CROWLEY	8-18-11
Project Requestor /Customer DAN CROWLEY	8-18-11
Facilities Project Manager GEMMA FLORES	8-18-11
Chief, Office of Protective Services JOHN ZELLMER	8-18-11
Chief - Safety, Health, and Environmental Office DAN MULLEN	8-18-11
DFRC Chief Information Officer KEN NORLIN	8-18-11

DATE STRTD	11/04/10	DATE PRNTD	05/23/11
DRAWN BY		TRADE	EDM-1703
SCALE	AS NOTED	SH. No. M6.7	
FILE NAME		SHEET No. 134 of 195	

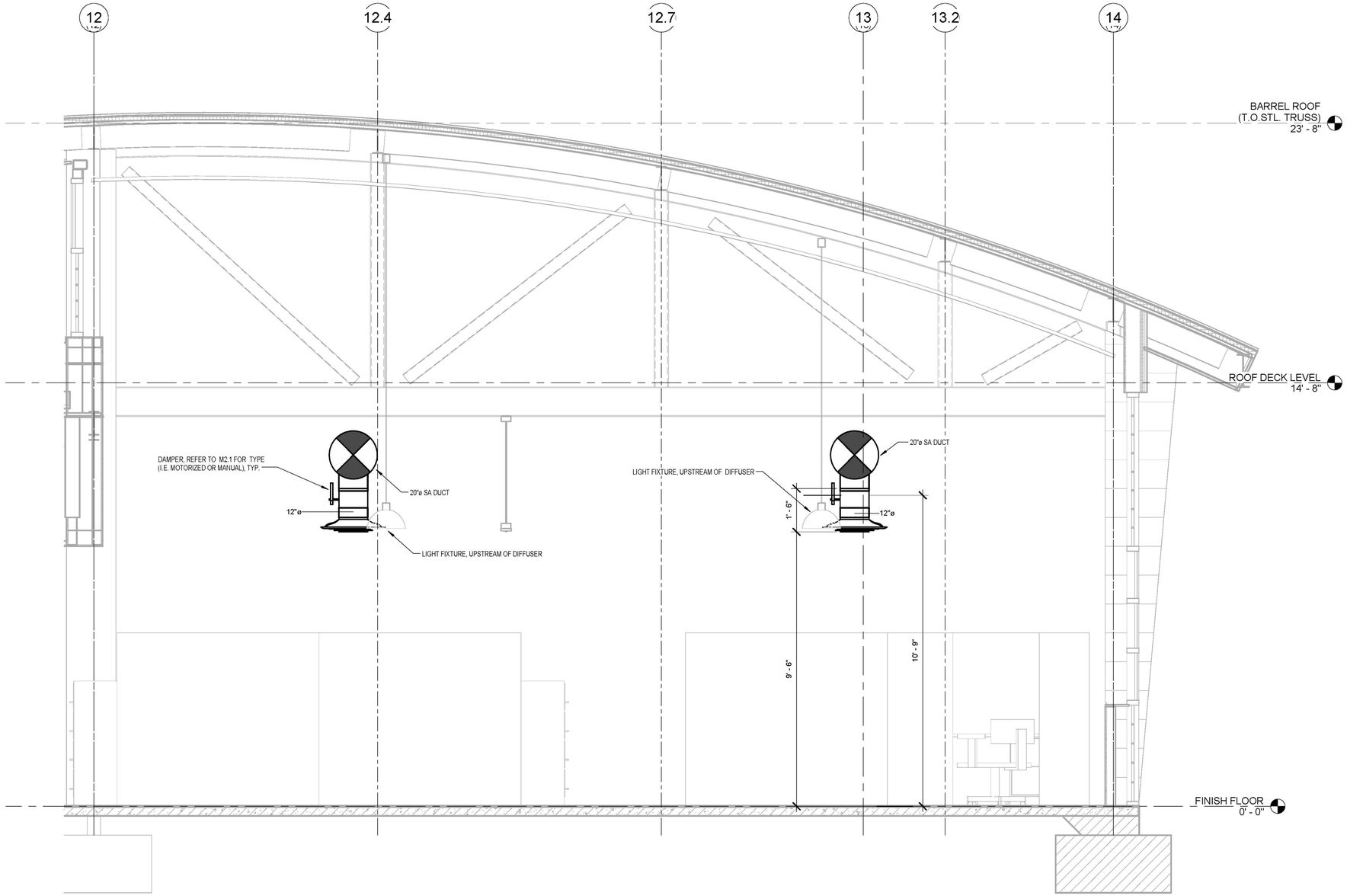

SECTION - AT 120 OFFICE SUITE

SCALE: 1/2" = 1'-0" | 1 | MX.Y | M7.0

REGISTERED PROFESSIONAL ENGINEER
DONN C. GILMORE
No. 11541
Exp. 9-30-11
MECHANICAL
STATE OF CALIFORNIA

DONN C. GILMORE & ASSOCIATES, INC.
Consulting Mechanical and Electrical Engineers

DCGA

4051 E. La Palma Ave., Ste. A
Anaheim, CA 92807
Ph.: 714.630.4291
Fax: 714.630.4805

DATE	SYM	REVISION	BY	A'PD

NATIONAL AERONAUTICS AND SPACE ADMINISTRATION
DRYDEN FLIGHT RESEARCH CENTER
EDWARDS, CA

DRAWING TITLE
MECHANICAL SECTIONS

PROJECT TITLE
8-18-11
FACILITIES SUPPORT CENTER
100% FINAL DESIGN SUBMITTAL

APPROVALS	DATE
Chief, Facilities Engineering Asset Mgmt. Office DAN CROWLEY	8-18-11
Project Requestor /Customer DAN CROWLEY	8-18-11
Facilities Project Manager GEMMA FLORES	8-18-11
Chief, Office of Protective Services JOHN ZELLMER	8-18-11
Chief - Safety, Health, and Environmental Office DAN MULLEN	8-18-11
DFRC Chief Information Officer KEN NORLIN	8-18-11

DATE STRTD	11/04/10	DATE PRNTD	05/23/11
DRAWN BY			EDM-1703
SCALE	AS NOTED	TRADE SH. No.	
FILE NAME		M7.0	SHEET No. 135 of 195