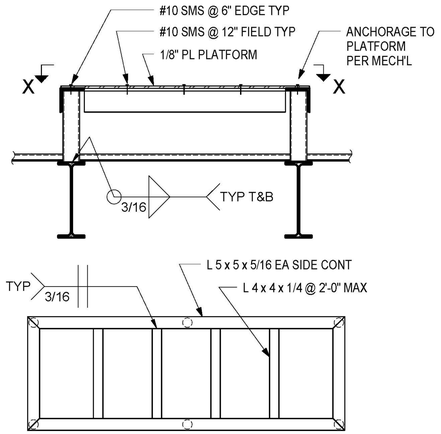

SECTION X-X

MECH PLATFORM — SCALE: 3/4" = 1'-0" — 11 / S3.2 S7.3

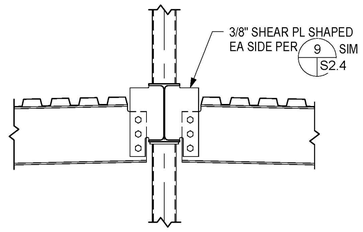

SHAPED SHEAR PL CONN 2 — SCALE: 3/4" = 1'-0" — 7 / S7.3

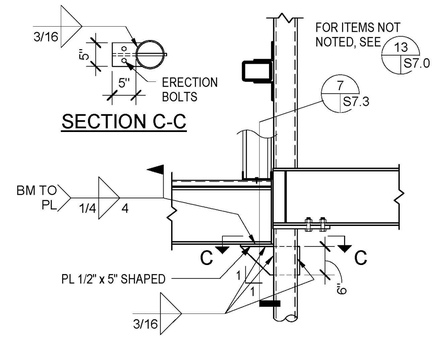

SECTION C-C

BEAM SEAT 2 — SCALE: 3/4" = 1'-0" — 5 / S3.2 S7.3

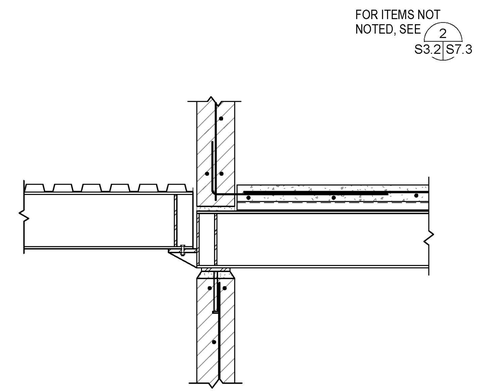

BEAM POCKET FLOOR 2 — SCALE: 3/4" = 1'-0" — 3 / S3.2 S7.3

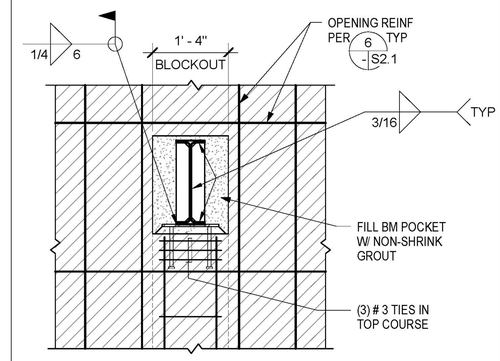

BEAM POCKET AT PILASTER — SCALE: 3/4" = 1'-0" — 1 / S7.0 S7.3

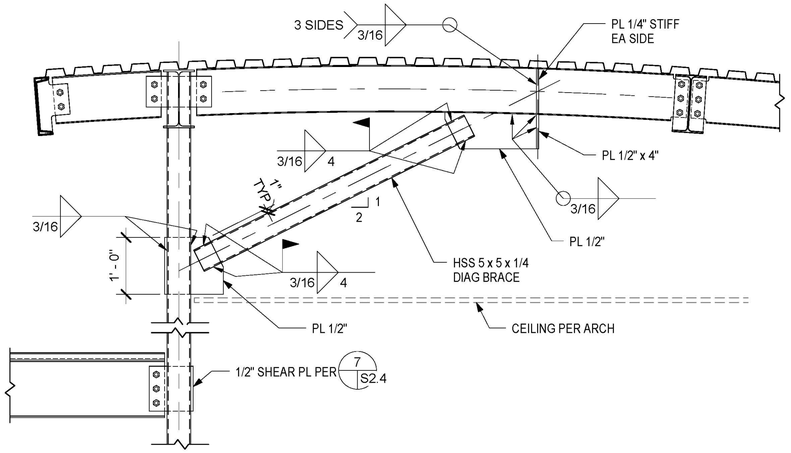

DIAGONAL BRACE — SCALE: 3/4" = 1'-0" — 8 / S3.2 S7.3

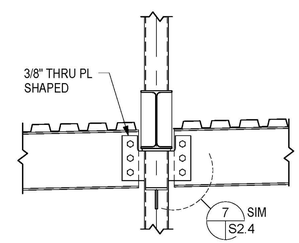

SHAPED SHEAR PL CONN 1 — SCALE: 3/4" = 1'-0" — 6 / S7.3

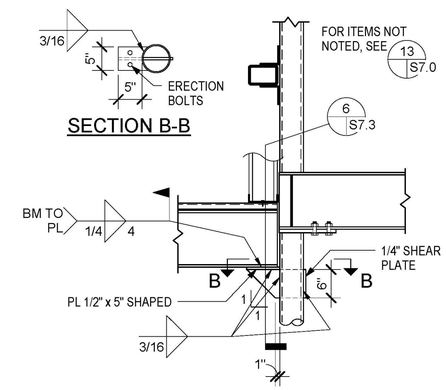

SECTION B-B

BEAM SEAT 1 — SCALE: 3/4" = 1'-0" — 4 / S3.2 S7.3

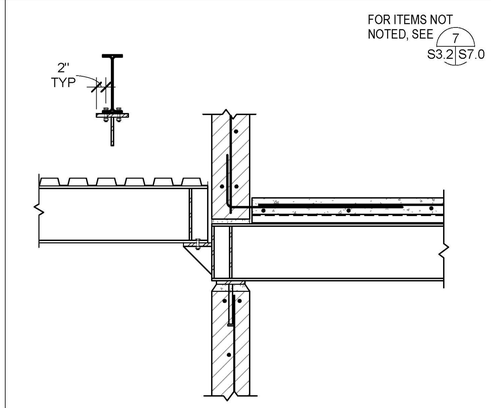

BEAM POCKET AT FLOOR 1 — SCALE: 3/4" = 1'-0" — 2 / S3.2 S7.3

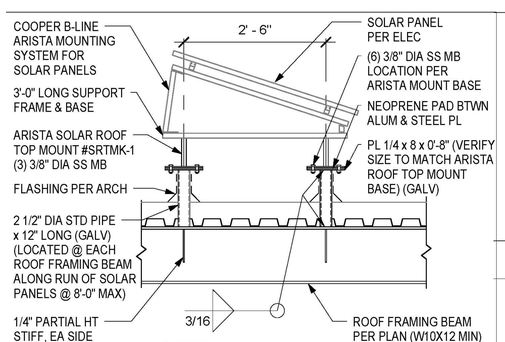

NOTE:

1. COOPER B-LINE ARISTA MOUNTING SYSTEM SHALL BE MANUFACTURED TO RESIST WIND LOADS OF 30.0 PSF DOWNWARD OR UPWARD WITH SUPPORT FRAMES AT 8'-0" O.C. MAX.
2. EXACT LOCATION AND SPACING OF SOLAR PANELS PER ELEC. 2

SOLAR PANEL SUPPORT — SCALE: 3/4" = 1'-0" — 12 / S7.3

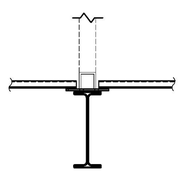

CURB AT MECH UNIT 2 — SCALE: 3/4" = 1'-0" — 9 / S3.2 S7.3

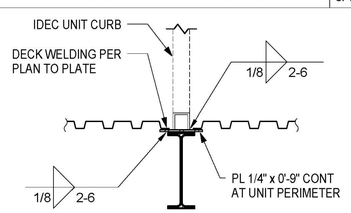

CURB AT MECH UNIT 1 — SCALE: 3/4" = 1'-0" — 10 / S3.2 S7.3

REGISTERED PROFESSIONAL ENGINEER — CHRISTOPHER W. TAMP — 2794 — Exp. 3-31-12 — STRUCTURAL — STATE OF CALIFORNIA

SDSE Structural Engineers

DEVELOPMENT ONE, INC.
1611 East Fourth Street, Suite 250
Santa Ana, California 92701
J. Bruce Camino, Architect, AIA, NCARB
(714) 889-0298
(714) 648-0197 FAX

DATE	SYM	REVISION	BY	A'PD

NATIONAL AERONAUTICS AND SPACE ADMINISTRATION
DRYDEN FLIGHT RESEARCH CENTER
EDWARDS, CA

DRAWING TITLE
FRAMING DETAILS

PROJECT TITLE 8-18-11
FACILITIES SUPPORT CENTER
100% FINAL DESIGN SUBMITTAL

APPROVALS	DATE
Chief, Facilities Engineering & Asset Mgmt. Office DAN CROWLEY	8-18-11
Project Requestor /Customer DAN CROWLEY	8-18-11
Facilities Project Manager GEMMA FLORES	8-18-11
Chief, Office of Protective Services JOHN ZELLMER	8-18-11
Chief - Safety, Health, and Environmental Office DAN MULLEN	8-18-11
DFRC Chief Information Officer KEN NORLIN	8-18-11

DATE STRTD	02/10/11	DATE PRNTD	5/23/11
DRAWN BY		EDM-1703	
SCALE	AS NOTED	TRADE SH. No.	
FILE NAME		S7.3	SHEET No. 111 of 196

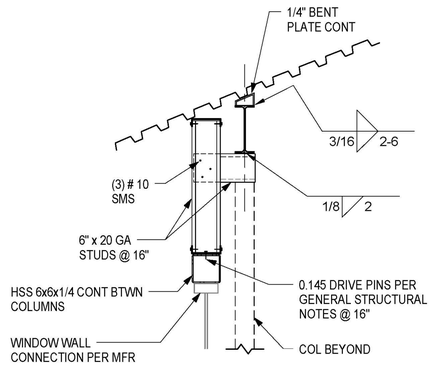

FRAMING DETAIL K — SCALE: 3/4" = 1'-0" — 9 / S3.4 S7.4

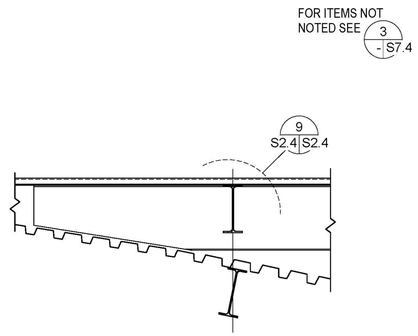

CANOPY DETAIL E — SCALE: 3/4" = 1'-0" — 6 / S7.2 S7.4

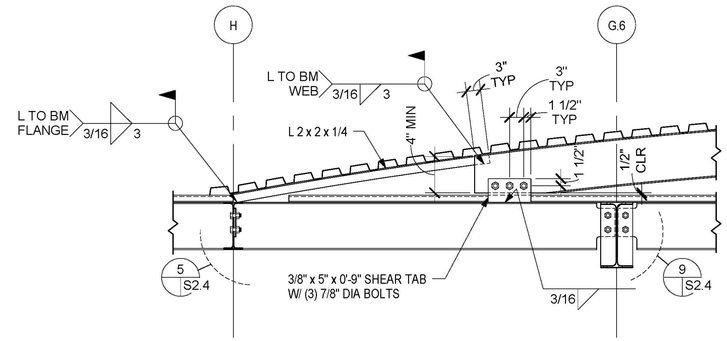

CANOPY DECK DETAIL B — SCALE: 3/4" = 1'-0" — 3 / S7.2 S7.4

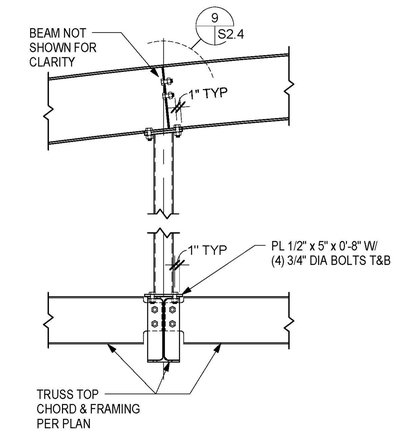

CANOPY POST DETAIL — SCALE: 3/4" = 1'-0" — 1 / S3.2 S7.4

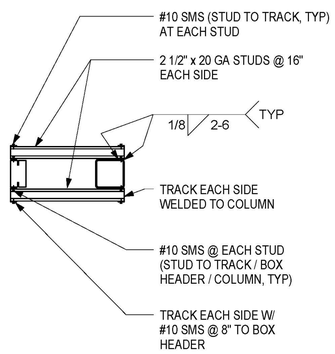

FRAMING DETAIL L — SCALE: 3/4" = 1'-0" — 10 / S6.0 S7.4

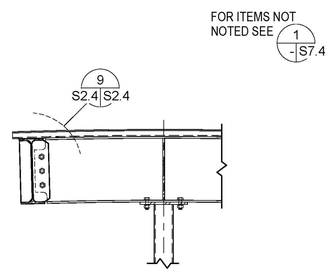

CANOPY DETAIL F — SCALE: 3/4" = 1'-0" — 7 / S7.2 S7.4

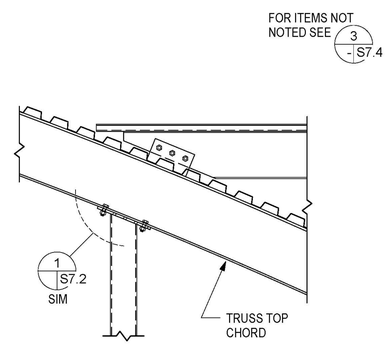

CANOPY DETAIL D — SCALE: 3/4" = 1'-0" — 5 / S7.2 S7.4

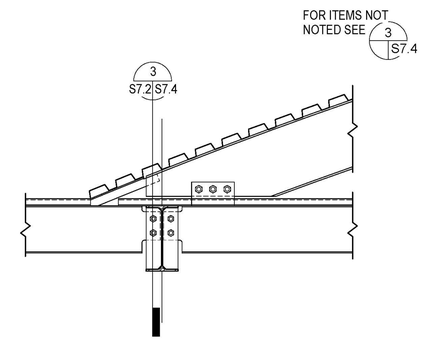

CANOPY DECK DETAIL C — SCALE: 3/4" = 1'-0" — 4 / S7.2 S7.4

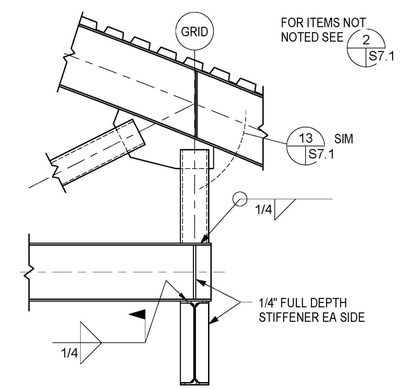

TRUSS 2A BRG AT BEAM — SCALE: 3/4" = 1'-0" — 2 / S3.2 S7.4

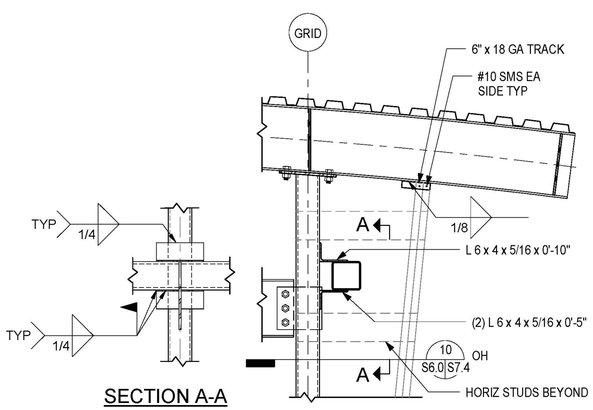

SECTION A-A

CLADDING AT COLUMN CONN — SCALE: 3/4" = 1'-0" — 11 / S7.4

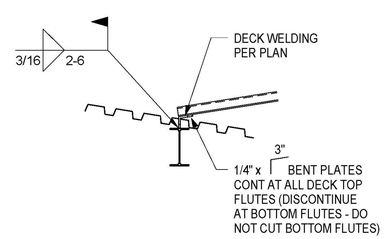

CANOPY DETAIL G — SCALE: 3/4" = 1'-0" — 8 / S3.4 S7.4

REGISTERED PROFESSIONAL ENGINEER — CHRISTOPHER M. JOHNSON — No. 2794 — Exp. 3-31-12 — STRUCTURAL — STATE OF CALIFORNIA

SDSE Structural Engineers

DEVELOPMENT ONE, INC.
1611 East Fourth Street, Suite 250
Santa Ana, California 92701
J. Bruce Camino, Architect, AIA, NCARB
(714) 689-0298
(714) 648-0197 FAX

DATE	SYM	REVISION	BY	A'PD

NATIONAL AERONAUTICS AND SPACE ADMINISTRATION

DRYDEN FLIGHT RESEARCH CENTER
EDWARDS, CA

DRAWING TITLE

FRAMING DETAILS

PROJECT TITLE 8-18-11

FACILITIES SUPPORT CENTER
100% FINAL DESIGN SUBMITTAL

APPROVALS	DATE
Chief, Facilities Engineering & Asset Mgmt. Office — DAN CROWLEY	8-18-11
Project Requestor /Customer — DAN CROWLEY	8-18-11
Facilities Project Manager — GEMMA FLORES	8-18-11
Chief, Office of Protective Services — JOHN ZELLMER	8-18-11
Chief - Safety, Health, and Environmental Office — DAN MULLEN	8-18-11
DFRC Chief Information Officer — KEN NORLIN	8-18-11

DATE STRTD	02/23/11	DATE PRNTD	5/23/11
DRAWN BY		EDM-1703	
SCALE	AS NOTED	TRADE SH. No.	S7.4
FILE NAME		SHEET No. 112 of 196	

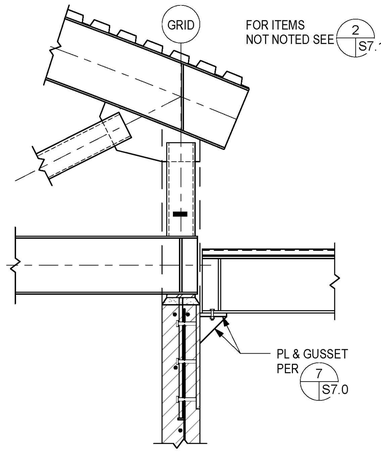

BEAM TO CMU — SCALE: 3/4" = 1'-0" (14 / S3.2 S7.5)

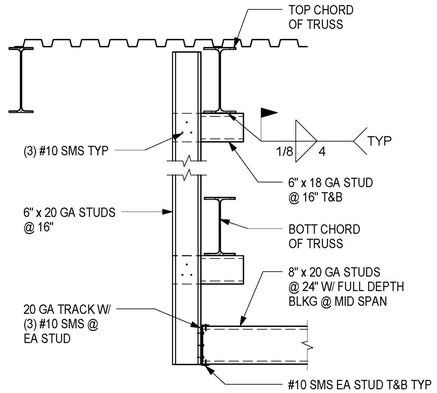

EXTERIOR STUDS AT CANOPY — SCALE: 3/4" = 1'-0" (10 / S3.2 S7.5)

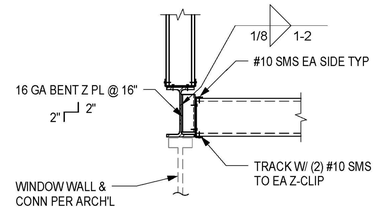

STUD CONN TO BM AT WDW WALL — SCALE: 3/4" = 1'-0" (7 / S3.2 S7.5)

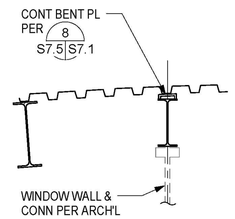

WINDOW WALL TO BM CONN — SCALE: 3/4" = 1'-0" (4 / S3.4 S7.5)

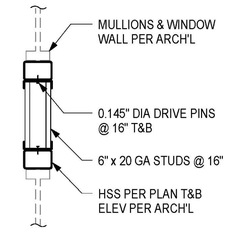

WINDOW WALL BEAM DETAIL — SCALE: 3/4" = 1'-0" (1 / S3.2 S7.5)

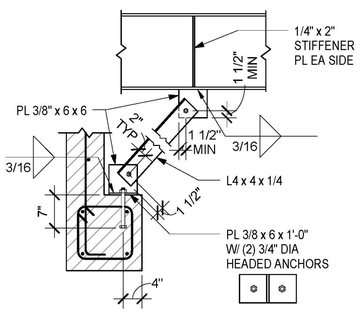

BRACE AT CMU HEADER — SCALE: 3/4" = 1'-0" (15 / S3.4 S7.5)

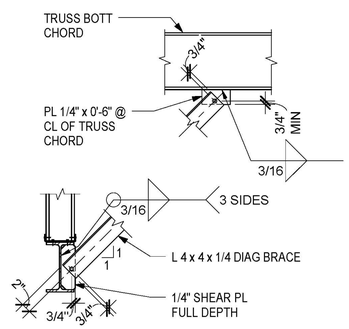

BEAM BRACE — SCALE: 3/4" = 1'-0" (11 / S3.2 S7.5)

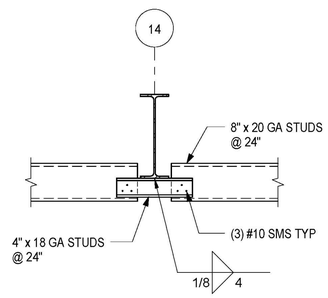

STUD CONN TO BEAM — SCALE: 3/4" = 1'-0" (8 / S3.2 S7.5)

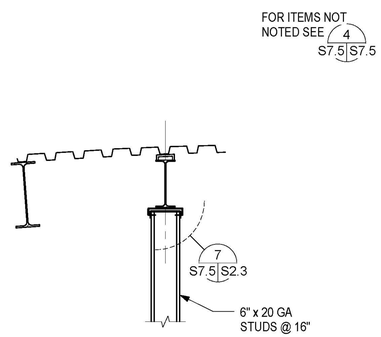

STUD WALL TO BM CONN — SCALE: 3/4" = 1'-0" (5 / S3.4 S7.5)

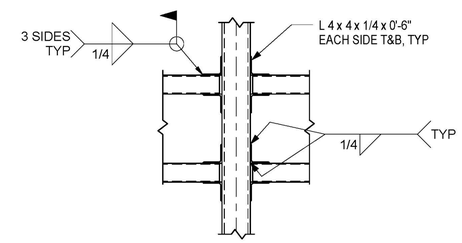

WINDOW WALL BEAM TO COL — SCALE: 3/4" = 1'-0" (2 / S3.2 S7.5)

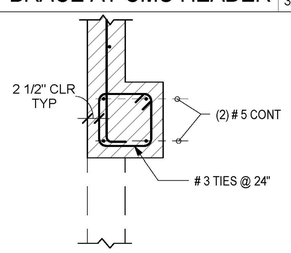

CMU HEADER — SCALE: 3/4" = 1'-0" (13 / S3.2 S7.5)

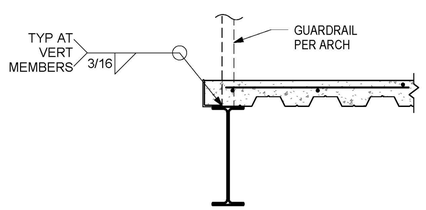

GUARDRAIL TO BEAM — SCALE: 3/4" = 1'-0" (12 / S3.2 S7.5)

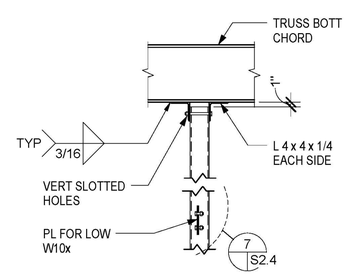

COL TO TRUSS BOTT CHORD — SCALE: 3/4" = 1'-0" (9 / S3.2 S7.5)

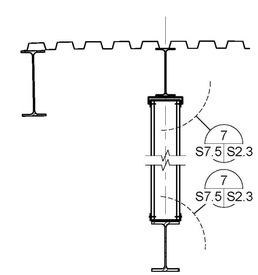

STUD WALL AT CANOPY — SCALE: 3/4" = 1'-0" (6 / S3.4 S7.5)

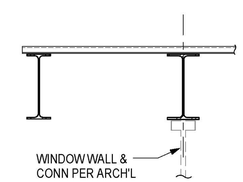

WINDOW WALL TO BM CONN 2 — SCALE: 3/4" = 1'-0" (3 / S3.4 S7.5)

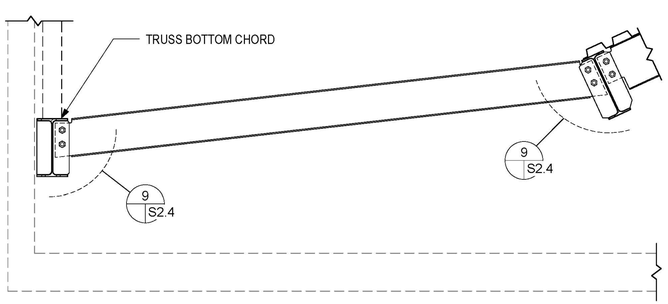

CANOPY DIAG BEAM — SCALE: 3/4" = 1'-0" (16 / S3.2 S7.5)

REGISTERED PROFESSIONAL ENGINEER CHRISTOPHER J. HOFFMAN 2794 Exp. 3-31-12 STRUCTURAL STATE OF CALIFORNIA

SDSE Structural Engineers

DEVELOPMENT ONE, INC.
1611 East Fourth Street, Suite 250
Santa Ana, California 92701
J. Bruce Camino, Architect, AIA, NCARB
(714) 689-0298
(714) 648-0197 FAX

DATE	SYM	REVISION	BY	A'PD

NATIONAL AERONAUTICS AND SPACE ADMINISTRATION
DRYDEN FLIGHT RESEARCH CENTER
EDWARDS, CA

DRAWING TITLE
FRAMING DETAILS

PROJECT TITLE
8-18-11
FACILITIES SUPPORT CENTER
100% FINAL DESIGN SUBMITTAL

APPROVALS		DATE
Chief, Facilities Engineering & Assgt Mgt Office DAN CROWLEY		8-18-11
Project Requestor /Customer DAN CROWLEY		8-18-11
Facilities Project Manager GEMMA FLORES		8-18-11
Chief, Office of Protective Services JOHN ZELLMER		8-18-11
Chief - Safety, Health, and Environmental Office DAN MULLEN		8-18-11
DFRC Chief Information Officer KEN NORLIN		8-18-11

DATE STRTD	03/01/11	DATE PRNTD	5/23/11
DRAWN BY			EDM-1703
SCALE	AS NOTED	TRADE SH. No.	
FILE NAME		S7.5	SHEET No. 113 of 195

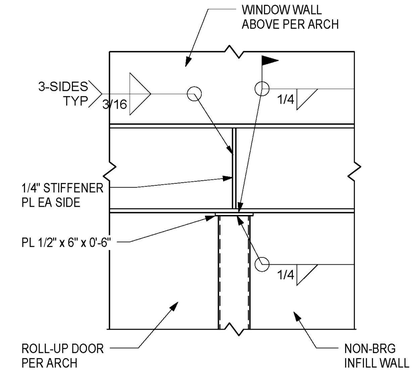

POST TO COLUMN — SCALE: 1" = 1'-0" — 1 / S3.2 S7.6

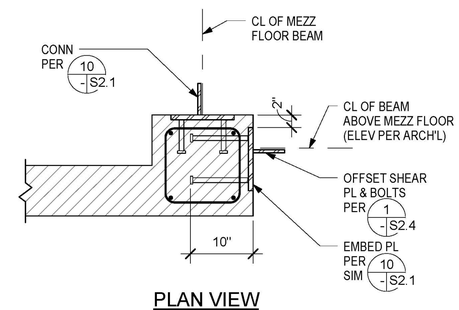

PLAN VIEW

BEAM TO PILASTER — SCALE: 1" = 1'-0" — 2 / S3.2 S7.6

SDSE Structural Engineers

DEVELOPMENT ONE, INC.
1611 East Fourth Street, Suite 250
Santa Ana, California 92701
J. Bruce Camino, Architect, AIA, NCARB
(714) 689-0298
(714) 648-0197 FAX

DATE	SYM	REVISION	BY	A'PD

NATIONAL AERONAUTICS AND SPACE ADMINISTRATION
DRYDEN FLIGHT RESEARCH CENTER
EDWARDS, CA

DRAWING TITLE
FRAMING DETAILS

PROJECT TITLE
8-18-11
FACILITIES SUPPORT CENTER
100% FINAL DESIGN SUBMITTAL

APPROVALS	DATE
Chief, Facilities Engineering & Asset Mgmt. Office DAN CROWLEY	8-18-11
Project Requestor /Customer DAN CROWLEY	8-18-11
Facilities Project Manager GEMMA FLORES	8-18-11
Chief, Office of Protective Services JOHN ZELLMER	8-18-11
Chief - Safety, Health, and Environmental Office DAN MULLEN	8-18-11
DFRC Chief Information Officer KEN NORLIN	8-18-11

DATE STRTD	05/26/11	DATE PRINTD	5/23/11
DRAWN BY		EDM-1703	
SCALE	AS NOTED	TRADE BR. No.	
FILE NAME		S7.6	SHEET No. 114 of 196

ABBREVIATIONS

NOTE:
ABBREVIATIONS LISTED ARE FOR GENERAL USE. DISREGARD THOSE WHICH ARE NOT USED ON DRAWING.

ABBREV.	DESCRIPTION
ACCH	AIR COOLED CHILLER
ACCU	AIR COOLED CONDENSING UNIT
AF	AIR FOIL
AFC	ABOVE FINISHED CEILING
AFF	ABOVE FINISHED FLOOR
AFG	ABOVE FINISHED GRADE
AHU	AIR HANDLING UNIT
AMPS	AMPERES
APD	AIR PRESSURE DROP
AV	AIR VENT
BD	BACKDRAFT DAMPER
BFF	BELOW FINISHED FLOOR
BLDG	BUILDING
BOD	BOTTOM OF DUCT
BTU	BRITISH THERMAL UNIT
CD	CONDENSATE DRAIN
CFH	CUBIC FEET PER HOUR
CFM	CUBIC FEET PER MINUTE
CFSD	COMBINATION FIRE/SMOKE DAMPER
CG	CEILING GRILLE
CW	COLD WATER
DB	DRY BULB
dB	DECIBEL
DC	DIRECT CURRENT
DEG	DEGREES
DIA	DIAMETER
DIM	DIMENSION
DISC	DISCONNECT
DN	DOWN
DWG(S)	DRAWING(S)
DX	DIRECT EXPANSION
EA	EXHAUST AIR, EACH
EAT	ENTERING AIR TEMPERATURE
EDB	ENTERING DRY BULB
EF	EXHAUST FAN
EFF	EFFICIENCY
ESP	EXTERNAL STATIC PRESSURE
EWB	ENTERING WET BULB
EXH	EXHAUST
EXIST, (E)	EXISTING
FC	FAN COIL
FD	FIRE DAMPER
FPI	FINS PER INCH
FT	FOOT, FEET
° F	DEGREES FAHRENHEIT
GC	GENERAL CONTRACTOR
GPM	GALLONS PER MINUTE
HD	HEAD, HUB DRAIN
HP	HORSEPOWER, HEAT PUMP
HTG	HEATING
HZ	HERTZ
ID	INSIDE DIAMETER
IN	INCH
IN WG	INCHES WATER GAUGE
IN WC	INCHES OF WATER COLUMN
L	LENGTH
LAT	LEAVING AIR TEMPERATURE
LB(S),#	POUND(S)
LDB	LEAVING DRY BULB

ABBREV.	DESCRIPTION
LF	LINEAR FEET
LRA	LOCKED ROTOR AMPS
LWB	LEAVING WET BULB
MAX	MAXIMUM
MBH	1000 BTU PER HOUR
MCA	MINIMUM CIRCUIT AMPACITY
MD	MOTORIZED DAMPER
MFR	MANUFACTURER
MIN	MINIMUM
(N)	NEW
NTS	NOT TO SCALE
OA	OUTSIDE AIR
OBD	OPPOSED BLADE DAMPER
OD	OUTSIDE DIAMETER
P.D	PRESSURE DROP
POC	POINT OF CONNECTION
PSI	POUNDS PER SQUARE INCH
QTY	QUANTITY
R	RETURN
RA	RETURN AIR
RCP	REFLECTED CEILING PLAN,
REQD	REQUIRED
RH	RELATIVE HUMIDITY
RHG	REFRIGERANT HOT GAS
RL	REFRIGERANT LIQUID
RLA	RUNNING LOAD AMPS
RPM M	REVOLUTIONS PER MINUTE MOTOR
RPM F	REVOLUTIONS PER MINUTE FAN
RS	REFRIGERANT SUCTION
RTU	ROOF TOP UNIT
S	SUPPLY
SA	SUPPLY AIR
SF	SQUARE FEET / SUPPLY FAN
SMACNA	SHEET METAL AND AIR CONDITIONING CONTRACTOR'S NATIONAL ASSOCIATION
SP	STATIC PRESSURE
SPEC	SPECIFICATION
SQ	SQUARE
SWE	SIDE WALL EXHAUST
SWR	SIDE WALL RETURN
T	TEMPERATURE, THERMOSTAT
TDH	TOTAL DYNAMIC HEAD
TG	TRANSFER GRILLE
THRU	THROUGH
TSP	TOTAL STATIC PRESSURE
TYP	TYPICAL
U/C	UNDERCUT
V	VOLT
VA	VOLT-AMPERE
VD	VOLUME DAMPER
W	WATT, WIDTH
W/	WITH
W/O	WITHOUT
WB	WET BULB
WC	WATER COLUMN
XFMR	TRANSFORMER

GENERAL & PIPING LEGEND

NOTE:
SYMBOLS LISTED ARE FOR GENERAL USE. DISREGARD THOSE WHICH ARE NOT USED ON DRAWING.

DESCRIPTION
EXISTING TO REMAIN
EXISTING BELOW ROOF
NEW
NEW BELOW ROOF
MOTOR OPERATED
PUMP
CHWS CHILLED HOT WATER SUPPLY
CHWR CHILLED HOT WATER RETURN
HHWR HEATING HOT WATER RETURN
HHWR HEATING HOT WATER RETURN
MALE HOSE CONNECTOR
PIPING REDUCER
PIPE ANCHOR
PIPE GUIDE
PIPE EXPANSION LOOP
EXPANSION JOINT
UNION
FLOW ARROW
PETE'S PLUG
PADDLE FLOW SWITCH
PRESSURE REDUCING VALVE
BALL VALVE
BUTTERFLY VALVE
GLOBE VALVE
GATE VALVE
DRAIN VALVE
MANUAL AIR VENT
AUTO AIR VENT
FLOW CONTROL VALVE
THREE-WAY CONTROL VALVE

DESCRIPTION
TWO-WAY CONTROL VALVE
MOTORIZED BUTTERFLY VALVE
TRIPLE DUTY VALVE
CHECK VALVE
CALIBRATED BALANCING VALVE
UNION
GAUGE VALVE
BLIND FLANGE
GAS COCK
GAS PRESSURE REGULATOR
GAS SOLENOID VALVE W/HI-LO FIRE
RELIEF VALVE
PETE'S PLUG
THERMOMETER W/ WELL
PADDLE TYPE FLOW SWITCH
DIFFERENTIAL PRESSURE FLOW SWITCH
DIFFERENTIAL PRESSURE SENSOR
PRESSURE GAUGE
SENSOR WELL
PIPE FLEXIBLE CONNECTOR
STRAINER
SIDEWALL DIFFUSER - SUPPLY
CEILING DIFFUSER - SUPPLY
CEILING SLOT DIFFUSER - SUPPLY / RETURN
RISER - SUPPLY AIR DUCT
DROP - SUPPLY AIR DUCT
SIDEWALL REGISTER - RETURN
CEILING GRILLE - RETURN
RISER - RETURN AIR DUCT
DROP - RETURN AIR DUCT

DESCRIPTION
SIDEWALL REGISTER - EXHAUST
CEILING GRILLE - EXHAUST
RISER - EXHAUST AIR DUCT
DROP - EXHAUST AIR DUCT
LINED DUCTWORK
VOLUME DAMPER
BACKDRAFT DAMPER
DUCT FLEXIBLE CONNECTION
DUCT SMOKE DETECTOR
STATIC PRESSURE SENSOR
THERMOSTAT (TEMPERATURE SENSOR)
MOTORIZED DAMPER
RECTANGULAR ELBOW WITH TURNING VANES
TRANSITION
CAPPED DUCT
DOOR UNDERCUT
DOOR LOUVER
CO2 CARBON DIOXIDE SENSOR
TSTAT TEMPERATURE SENSOR
COMBINATION SMOKE/FIRE DAMPER

GENERAL NOTES

1. ALL WORK SHALL BE PERFORMED IN STRICT ACCORDANCE WITH ALL APPLICABLE STATE, NATIONAL, AND LOCAL BUILDING CODES AND STANDARD, INCLUDING THE CBC, CMC, CEC, AND ASHRAE 90.1.
2. PRIOR TO BIDDING, OBTAIN A FULL COPY OF THE PLANS SPECIFICATIONS.
3. THESE DRAWINGS ARE DIAGRAMMATIC. ACTUAL FIELD CONDITIONS MAY VARY AND MUST BE FIELD VALIDATED AND COORDINATED WITH OTHER TRADES PRIOR TO FABRICATION AND CONSTRUCTION.
4. COORDINATE INSTALLATION WITH THE WORK OF OTHER TRADES PRIOR TO STARTING. IN EVENT THAT CONFLICTS ARE FOUND WITH THE WORK OF OTHER TRADES, BRING SUCH CONFLICTS TO THE ARCHITECT'S ATTENTION FOR RESOLUTION PRIOR TO PROCEEDING WITH THE WORK IN THAT AREA.
5. PRIOR TO CONSTRUCTION THE CONTRACTOR SHALL SUBMIT DETAILED SHOP AND VENDOR DRAWINGS IN ADEQUATE DETAIL, ORGANIZED AND MARKED FOR REVIEW BY THE ARCHITECT AND ENGINEER OF RECORD.
6. CONTRACTOR IS RESPONSIBLE FOR PATCHING AND REPAIRING AREAS, PIPING, DUCTWORK, ETC., EXISTING OR NEW, THAT ARE DAMAGED AS A RESULT OF THE WORK. REPAIR TO MATCH EXISTING CONDITIONS.
7. CUTTING OR PENETRATION OF STRUCTURAL MEMBERS IS PROHIBITED WITHOUT THE PRIOR WRITTEN APPROVAL OF THE STRUCTURAL ENGINEER OF RECORD AND THE PROJECT ARCHITECT/OWNER.
8. HORIZONTAL PIPING AND TUBING SHALL BE SUPPORTED AT SUFFICIENTLY CLOSE INTERVALS TO KEEP IT IN ALIGNMENT AND PREVENT EXCESSIVE SAGGING. DO NOT USE WIRE OR PLUMBERS TAPE FOR HANGING OR STRAPPING PIPES.
9. UNIONS SHALL BE PROVIDED AND INSTALLED PRIOR TO EQUIPMENT CONNECTIONS. PROVIDE DIELECTRIC UNIONS, GASKETS AND FASTENERS AT DISSIMILAR METAL CONNECTIONS OR CONTACT POINTS.
10. PROVIDE ADEQUATE SUPPORT (THRUST RESTRAINTS, ETC.) FOR PIPING AT POINTS WHERE EQUIPMENT IS DISCONNECTED FROM THE SYSTEM.
11. EQUIPMENT SHALL BE INSTALLED, DUCTED AND/OR PIPED IN ACCORDANCE APPLICABLE CODES AND MANUFACTURERS RECOMMENDATIONS.
12. ACCURATE "AS-BUILT" DRAWINGS SHALL BE MAINTAINED DURING CONSTRUCTION AND SUBM:TTED FOR APPROVAL UPON COMPLETION OF INSTALLATION.
13. MECHANICAL SYSTEMS SHALL BE TESTED, BALANCED AND OPERATED TO DEMONSTRATE TO THE OWNER OR DESIGNATED REPRESENTATIVE THAT THE INSTALLATION AND PERFORMANCE OF THE SYSTEMS CONFORM TO THE DESIGN INTENT.
14. CONTROL SCHEMATICS ARE INTENDED TO CONVEY OPERATING PRINCIPLES AND INTER-RELATIONSHIPS ONLY. ACTUALSIZING, LOCATION, AND COMPONENTS AND WIRING SHALL BE PER THE MANUFACTURERS RECOMMENDATION AND ALL CODE REQUIREMENTS.

SEISMIC NOTES

1. ANCHORAGE AND/OR SEISMIC RESTRAINTS SHALL BE DESIGNED BY A REGISTERED PROFESSIONAL ENGINEER LICENSED IN THE STATE OF CALIFORNIA.
2. THE ANCHORAGE AND/OR SEISMIC RESTRAINT OF PERMANENT EQUIPMENT AND ASSOCIATED SYSTEMS LISTED SHALL BE DESIGNED TO RESIST THE TOTAL DESIGN SEISMIC FORCES PRESCRIBED IN SECTION 1613 OF THE 2007 CALIFORNIA BUILDING CODE AND CHAPTER 13 OF ASCE 7-05.
3. SEISMIC RESTRAINTS ARE REQUIRED TO BE DESIGNED FOR THE FOLLOWING INSTALLATIONS. REFER TO MASON INDUSTRIES, INC. SEISMIC RESTRAINT GUIDELINES FOR ADDITIONAL REQUIREMENTS:

a. FLOOR OR ROOF MOUNTED EQUIPMENT WEIGHT 400 LBS OR GREATER.
b. SUSPENDED OR WALL MOUNTED EQUIPMENT WEIGHT 20 LBS OR GREATER.
c. VIBRATION ISOLATION EQUIPMENT WEIGHING 20 LBS. OR GREATER.
d. PIPING 1-1/4 INCHES NOMINAL DIAMETER AND LARGE FOR COMPONENT IMPORTANCE FACTOR Ip GREATER THAN 1.0.
e. PIPING 3-1/2 INCHES NOMINAL DIAMETER AND LARGER FOR COMPONENT IMPORTANCE FACTOR Ip EQUAL TO 1.0.
f. RECTANGULAR DUCTWORK WHOSE CROSS-SECTIONAL AREA IS LARGER THAN 6-FEET SQUARE. FOR ROUND SHAPED DUCTS, THE DIAMETER SHOULD BE MORE THAN 33 INCHES.
g. PIPES SUPPORTED BY A TRAPEZE WHERE NONE OF THOSE ELEMENTS WOULD INDIVIDUALLY REQUIRE BRACING NEED NOT BE BRACED IF CONNECTIONS TO THE PIPE/DUCT OR DIRECTIONAL CHANGES DNOT RESTRICT MOVEMENT OF THE TRAPEZE AND THE COMBINED OPERATING WEIGHT OF ALL ELEMENTSUPPORTED BY THE TRAPEZE IS LESS THAN 5 LBS/FT. BRACING IS REQUIRED IF THIS FLEXIBLITY IS NOT PROVIDED OR THE COMBINED OPERATING WEIGHT OF ALL ELEMENTS SUPPORTED BY THE TRAPEZE IS 5 LBS/FT OR GREATER.

DRAWING/DETAIL REFERENCE KEY

SYMBOL	DESCRIPTION
1	PLAN REFERENCE / KEY NOTE
1	PHOTO REFERENCE / PHOTO DIRECTION
1	REVISION
A	AIR DEVICE CALLOUT
	POINT OF CONNECTION
	POINT OF DISCONNECTION/DEMOLITION

RE: 2/M0.01 — REFER TO — DRAWING/DETAIL NUMBER — SHEET NUMBER OF DRAWING/DETAIL
2 / M0.01
4 / M3 M9 — SHEET SHOWN — SHEET REFERENCED TO
EQUIPMENT TAG

EXHAUST/RETURN GRILLE SCHEDULE

ITEM	MANUFACTURER MODEL NO.	TYPE	MOUNTING	NECK SIZE	OVERALL SIZE	MAX N.C.	MAX P.D.	MAX CFM
CG-1	TITUS 50F 1/2"	EGGCRATE	LAY-IN T-BAR	6x6	24x24	25	0.08	120
CG-2	TITUS 50F 1/2"	EGGCRATE	LAY-IN T-BAR	8x8	24x24	25	0.08	220
CG-3	TITUS 50F 1/2"	EGGCRATE	LAY-IN T-BAR	10x10	24x24	25	0.08	340
CG-4	TITUS 50F 1/2"	EGGCRATE	LAY-IN T-BAR	12x12	24x24	25	0.08	500
CG-5	TITUS 50F 1/2"	EGGCRATE	LAY-IN T-BAR	16x16	24x24	25	0.08	640
CG-6	TITUS 50F 1/2"	EGGCRATE	LAY-IN T-BAR	18x18	24x24	25	0.08	1000
CG-7	TITUS 50F 1/2"	EGGCRATE	SURFACE MOUNTED	6x6	24x24	25	0.08	120
CG-8	TITUS 50F 1/2"	EGGCRATE	SURFACE MOUNTED	8x8	24x24	25	0.08	220
CG-9	TITUS 50F 1/2"	EGGCRATE	SURFACE MOUNTED	10x10	24x24	25	0.08	340
CG-10	TITUS 50F 1/2"	EGGCRATE	SURFACE MOUNTED	12x12	24x24	25	0.08	500
CG-11	TITUS 50F 1/2"	EGGCRATE	SURFACE MOUNTED	16x16	24x24	25	0.08	640
CG-12	TITUS 50F 1/2"	EGGCRATE	SURFACE MOUNTED	6x6	12x12	25	0.08	120
CG-13	TITUS 50F 1/2"	EGGCRATE	SURFACE MOUNTED	10x10	12x12	25	0.08	340
SWR	TITUS 350RS	LOUVERED	WALL MOUNT	SEE PLANS	SEE PLANS	25	0.08	SEE PLANS
SWE	TITUS 350RS	LOUVERED	WALL MOUNT	SEE PLANS	SEE PLANS	25	0.08	SEE PLANS

SUPPLY DIFFUSER/GRILLE SCHEDULE

ITEM	MANUFACTURER MODEL NO.	TYPE	MOUNTING	NECK SIZE	OVERALL SIZE	MAX N.C.	MAX P.D.	MAX CFM
CD-1	TITUS OMNI	PLAQUE TYPE	LAY-IN T-BAR	6x6	24x24	25	0.08	120
CD-2	TITUS OMNI	PLAQUE TYPE	LAY-IN T-BAR	8x8	24x24	25	0.08	220
CD-3	TITUS OMNI	PLAQUE TYPE	LAY-IN T-BAR	10x10	24x24	25	0.08	340
CD-4	TITUS OMNI	PLAQUE TYPE	LAY-IN T-BAR	12x12	24x24	25	0.08	500
CD-5	TITUS OMNI	PLAQUE TYPE	LAY-IN T-BAR	16x16	24x24	25	0.08	640
CD-6	TITUS OMNI	PLAQUE TYPE	LAY-IN T-BAR	18x18	24x24	25	0.08	900
CD-7	TITUS OMNI	PLAQUE TYPE	SURFACE MOUNTED	6x6	24x24	25	0.08	120
CD-8	TITUS OMNI	PLAQUE TYPE	SURFACE MOUNTED	8x8	24x24	25	0.08	220
CD-9	TITUS OMNI	PLAQUE TYPE	SURFACE MOUNTED	10x10	24x24	25	0.08	340
CD-10	TITUS OMNI	PLAQUE TYPE	SURFACE MOUNTED	12x12	24x24	25	0.08	500
CD-11	TITUS OMNI	PLAQUE TYPE	SURFACE MOUNTED	16x16	24x24	25	0.08	640
CD-12	TITUS OMNI	PLAQUE TYPE	LAY-IN T-BAR	6x6	12x12	25	0.08	120
CD-13	TITUS TMRA	ADJ. ROUND CLG. DIFFUSER	DUCT MOUNTED	12	27"ø	25	0.08	SEE PLANS
CD-14	TITUS TMRA	ADJ. ROUND CLG. DIFFUSER	DUCT MOUNTED	12	27"ø	25	0.08	SEE PLANS
SG	TITUS 300RS	DOUBLE DEFLECTION	DUCT MOUNTED	SEE PLANS	SEE PLANS	25	0.08	SEE PLANS
SWS	TITUS 300RS	DOUBLE DEFLECTION	WALL MOUNTED	SEE PLANS	SEE PLANS	25	0.08	SEE PLANS

NOTES:
1. CEILING DIFFUSER THROWS SHALL BE 360° THROW UNLESS OTHERWISE INDICATED.
2. CD-13 SHALL COME WITH 24V ELECTRIC ACTUATOR TO ADJUST THROW FROM HORIZONTAL TO VERTICAL WHEN IN HEATING MODE.

STORAGE TANK

SYMBOL	MANUFACTURER MODEL NO.	LOCATION	SERVICE	CAPACITY (GAL.)	DIMENSION		OPERATING WEIGHT (LBS)	REMARKS
					DIAMETER	HEIGHT		
ST 1	WESSELS CBT-200	CHILLER ROOM 205	CHILLED WATER SYSTEM	200	30"	72"	1,985	- WITH BASE RING, WELDED ANGLE CLIPS FOR ANCHORING TO SLAB. - NO INTERIOR LINING. - OR APPROVED EQUAL.

DUST COLLECTOR SCHEDULE

SYMBOL	MANUFACTURER MODEL NO.	LOCATION	CFM	S.P. (INCH)	HP	ELECTRICAL		OPERATING WEIGHT (LBS.)	REMARKS
						VOLT	PHASE		
DC 1	DONALDSON TORIT UMA 450	GRADE	3,000	10	15	460	3	1,500	- OR APPROVED EQUAL.

REGISTERED PROFESSIONAL ENGINEER DONN C. GILMORE No. 11541 Exp. 9-30-11 MECHANICAL STATE OF CALIFORNIA

DONN C. GILMORE & ASSOCIATES, INC.
Consulting Mechanical and Electrical Engineers
DCGA
4051 E. La Palma Ave., Ste. A
Anaheim, CA 92807
Ph.: 714.630.4291
Fax: 714.630.4805

DATE	SYM	REVISION	BY	A'PD

NATIONAL AERONAUTICS AND SPACE ADMINISTRATION
DRYDEN FLIGHT RESEARCH CENTER
EDWARDS, CA

DRAWING TITLE
MECHANICAL GENERAL NOTES, LEGEND, AND SYMBOLS LIST

PROJECT TITLE
8-18-11
FACILITIES SUPPORT CENTER
100% FINAL DESIGN SUBMITTAL

APPROVALS	DATE
Cheif, Facilities Engineering & Asset Mgmt. Office DAN CROWLEY	8-18-11
Project Requestor /Customer DAN CROWLEY	8-18-11
Facilities Project Manager GEMMA FLORES	8-18-11
Chief, Office of Protective Services JOHN ZELLMER	8-18-11
Chief - Safety, Health, and Environmental Office DAN MULLEN	8-18-11
DFRC Chief Information Officer KEN NORLIN	8-18-11

DATE STRTD	11/04/10	DATE PRNTD	05/23/11
DRAWN BY		EDM-1703	
SCALE	AS NOTED	TRADE SH. No.	
FILE NAME		M0.1	SHEET No. 115 of 195