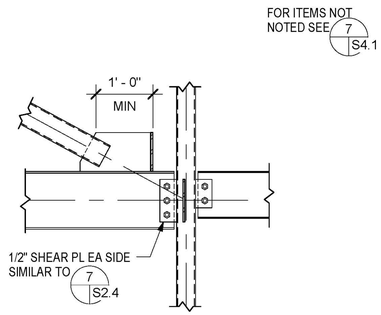

FRAMING DETAIL 13 SCALE: 3/4" = 1'-0" 13 S4.0 S4.1

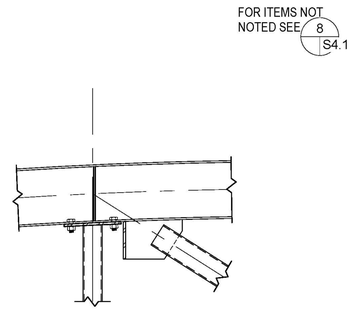

FRAMING DETAIL 10 SCALE: 3/4" = 1'-0" 10 S4.0 S4.1

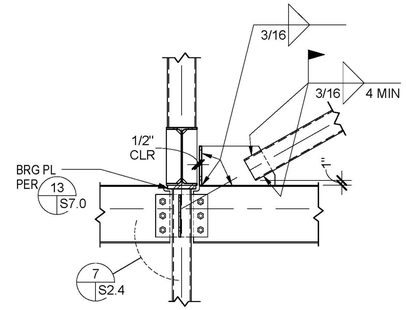

FRAMING DETAIL 7 SCALE: 3/4" = 1'-0" 7 S4.0 S4.1

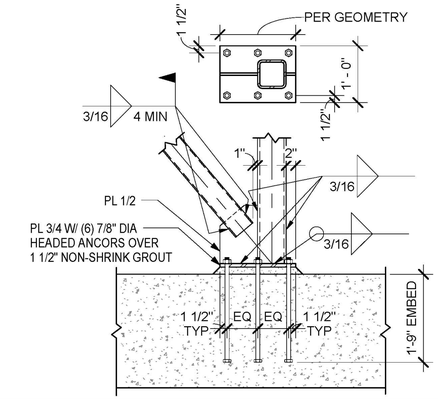

FRAME DETAIL 1 SCALE: 3/4" = 1'-0" 1 S4.0 S4.1

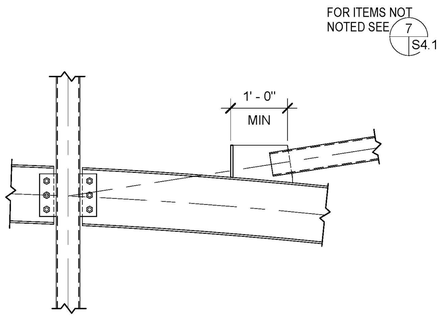

FRAMING DETAIL 14 SCALE: 3/4" = 1'-0" 14 S4.0 S4.1

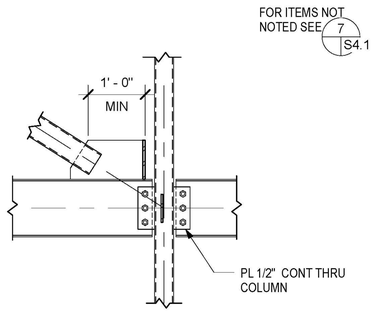

FRAMING DETAIL 11 SCALE: 3/4" = 1'-0" 11 S4.0 S4.1

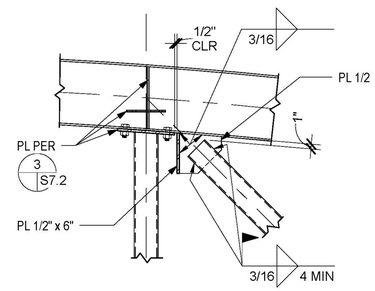

FRAMING DETAIL 8 SCALE: 3/4" = 1'-0" 8 S4.0 S4.1

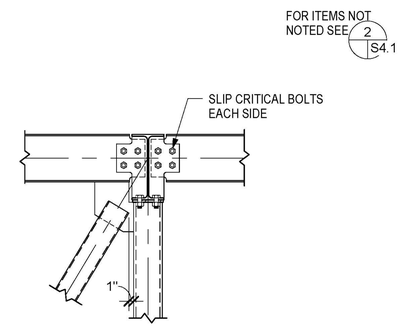

FRAME DETAIL 5 SCALE: 3/4" = 1'-0" 5 S4.0 S4.1

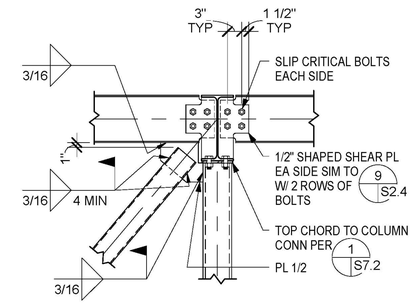

FRAME DETAIL 2 SCALE: 3/4" = 1'-0" 2 S4.0 S4.1

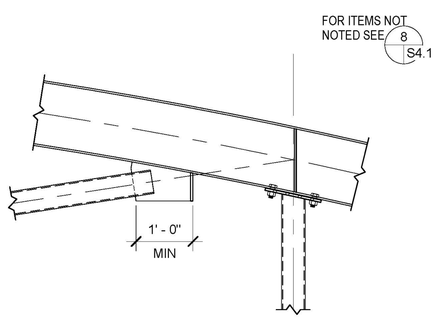

FRAMING DETAIL 15 SCALE: 3/4" = 1'-0" 15 S4.0 S4.1

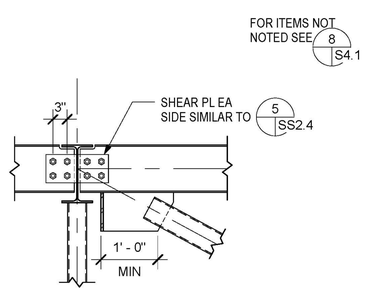

FRAMING DETAIL 12 SCALE: 3/4" = 1'-0" 12 S4.0 S4.1

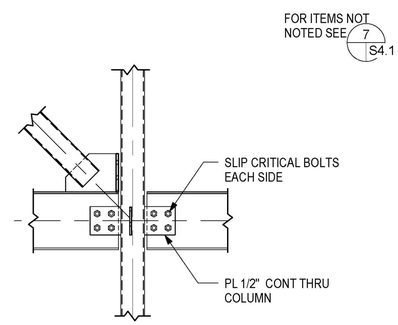

FRAMING DETAIL 9 SCALE: 3/4" = 1'-0" 9 S4.0 S4.1

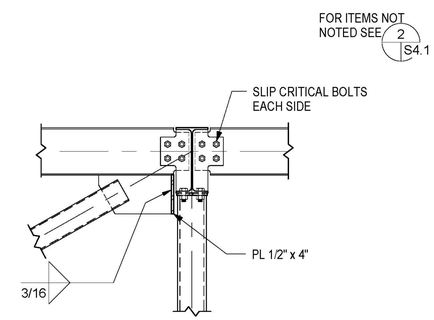

FRAMING DETAIL 6 SCALE: 3/4" = 1'-0" 6 S4.0 S4.1

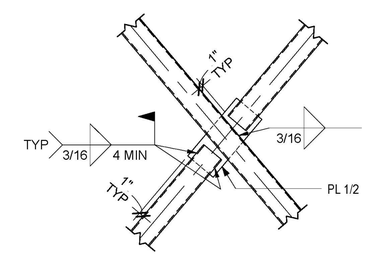

FRAME DETAIL 3 SCALE: 3/4" = 1'-0" 3 S4.0 S4.1

SDSE Structural Engineers

DEVELOPMENT ONE, INC.
1611 East Fourth Street, Suite 250
Santa Ana, California 92701
J. Bruce Camino, Architect, AIA, NCARB
(714) 689-0298
(714) 648-0197 FAX

DATE	SYM	REVISION	BY	A'PD

NATIONAL AERONAUTICS AND SPACE ADMINISTRATION

DRYDEN FLIGHT RESEARCH CENTER
EDWARDS, CA

DRAWING TITLE

FRAME DETAILS

PROJECT TITLE 8-18-11

FACILITIES SUPPORT CENTER
100% FINAL DESIGN SUBMITTAL

APPROVALS	DATE
Chief, Facilities Engineering & Asset Mgmt. Office DAN CROWLEY	8-18-11
Project Requestor /Custodian DAN CROWLEY	8-18-11
Facilities Project Manager GEMMA FLORES	8-18-11
Chief, Office of Protective Services JOHN ZELLMER	8-18-11
Chief - Safety, Health, and Environmental Office DAN MULLEN	8-18-11
DFRC Chief Information Officer KEN NORLIN	8-18-11

DATE STRTD	11/01/10	DATE PRINTD	5/23/11
DRAWN BY		EDM-1703	
SCALE	AS NOTED	TRADE SH. No.	
FILE NAME		S4.1	SHEET No. 106 of 196

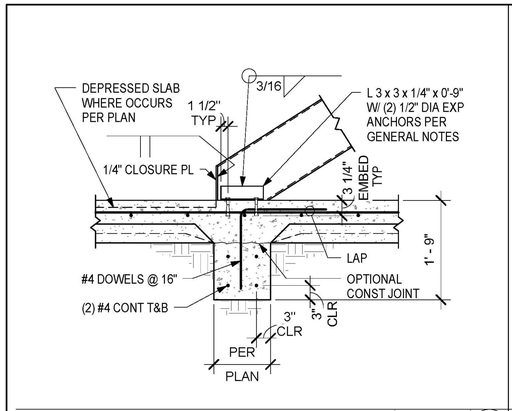

STAIR FOUNDATION DETAIL — SCALE: 3/4" = 1'-0" — 12 / S3.0 S6.0

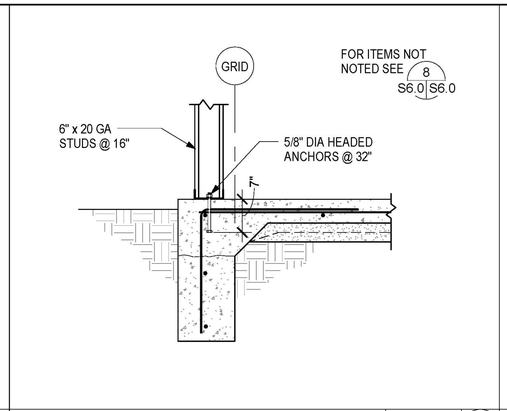

TURNDOWN AT STUD WALL — SCALE: 3/4" = 1'-0" — 9 / S3.0 S6.0

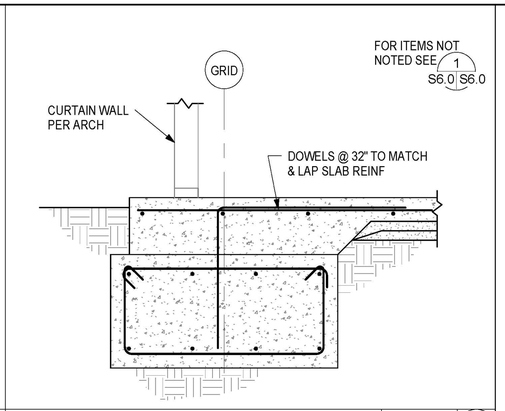

GRADE BEAM AT CURTAIN WALL — SCALE: 3/4" = 1'-0" — 6 / S3.0 S6.0

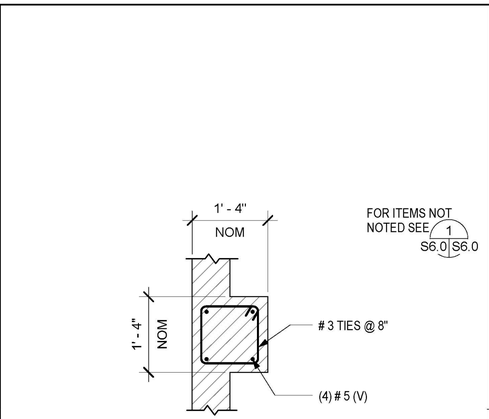

SECTION A-A

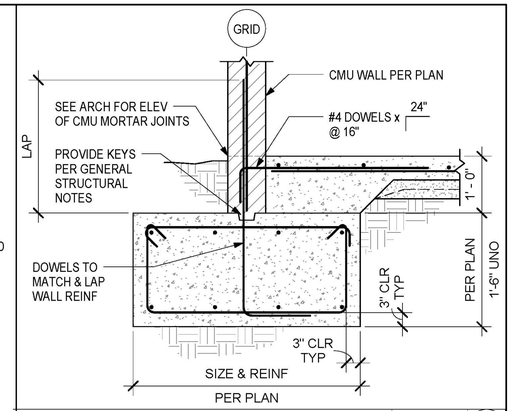

GRADE BEAM AT EXT WALL — SCALE: 3/4" = 1'-0" — 1 / S3.0 S6.0

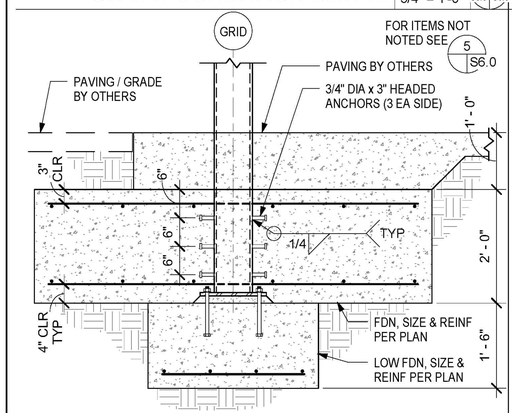

FOOTING AT CANOPY — SCALE: 3/4" = 1'-0" — 13 / S3.0 S6.0

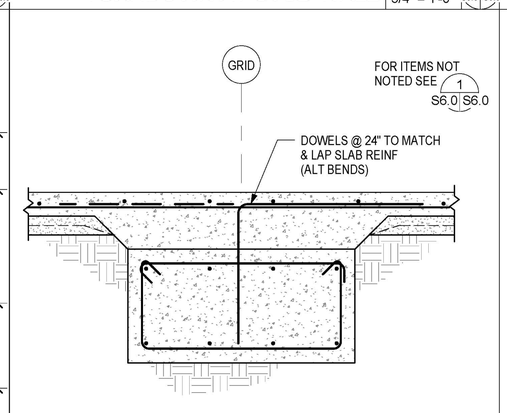

GRADE BEAM AT INT — SCALE: 3/4" = 1'-0" — 10 / S3.0 S6.0

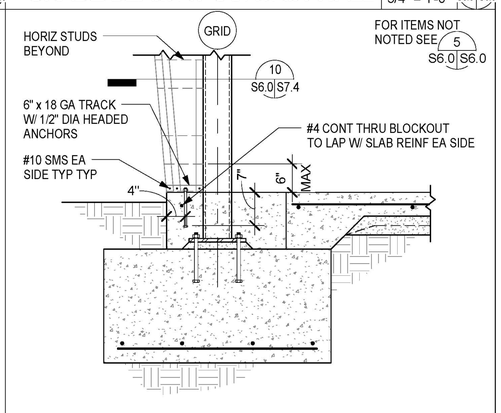

EXT COL FOOTING — SCALE: 3/4" = 1'-0" — 7 / S3.0 S6.0

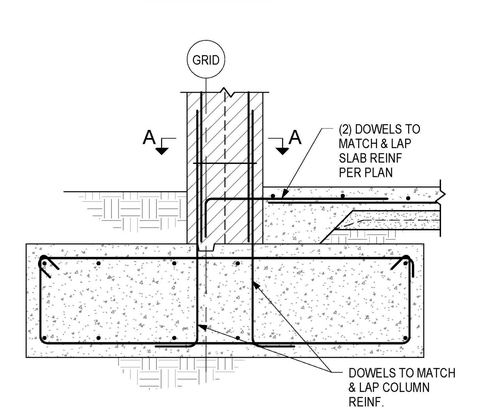

GRADE BEAM AT PILASTER — SCALE: 3/4" = 1'-0" — 4 / S3.0 S6.0

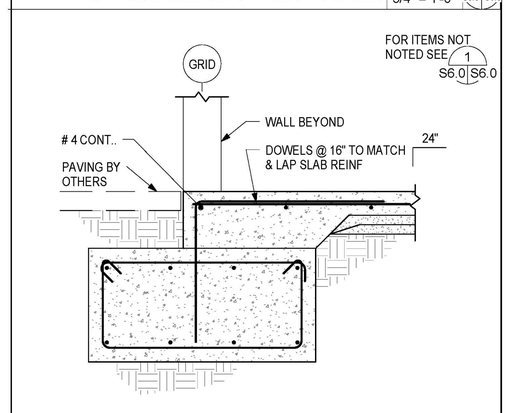

GRADE BEAM AT WALL OPENING — SCALE: 3/4" = 1'-0" — 2 / S3.0 S6.0

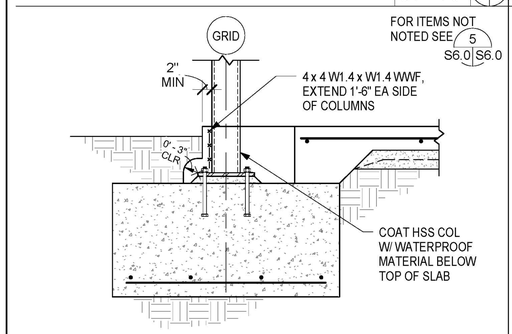

EXT COL FOOTING AT COLUMN — SCALE: 3/4" = 1'-0" — 14 / S3.0 S6.0

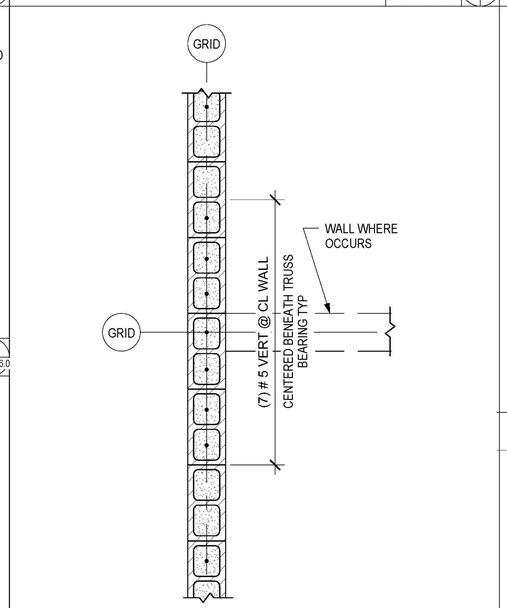

PLAN VIEW

TRUSS BRG AT WALL — SCALE: 3/4" = 1'-0" — 11 / S3.0 S6.0

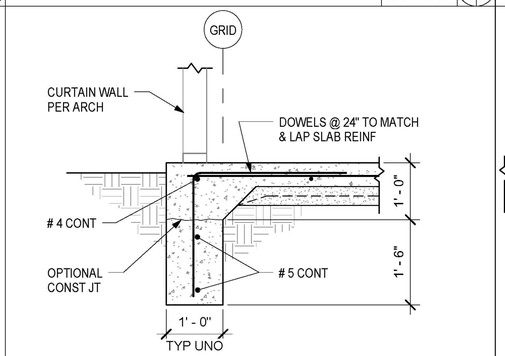

TURNDOWN — SCALE: 3/4" = 1'-0" — 8 / S3.0 S6.0

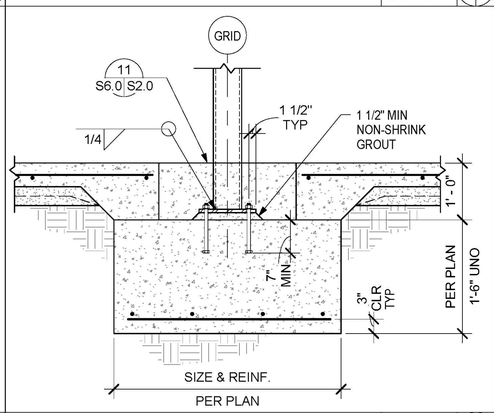

INT COL FOOTING — SCALE: 3/4" = 1'-0" — 5 / S3.0 S6.0

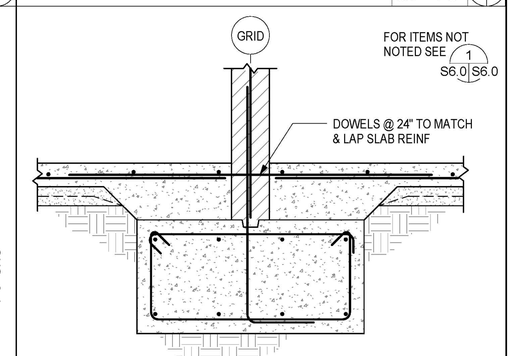

GRADE BEAM AT INT WALL — SCALE: 3/4" = 1'-0" — 3 / S3.0 S6.0

PLAN COLUMN AT CMU WALL — SCALE: 3/4" = 1'-0" — 15 / S3.0 S6.0

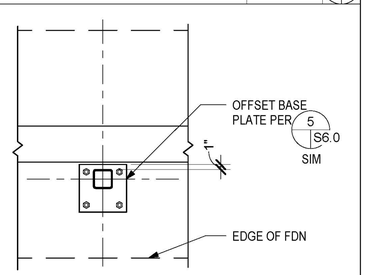

SECTION OF PROFESSIONAL ENGINEER CHRISTOPHER J. HAND 2794 3-31-12 STRUCTURAL STATE OF CALIFORNIA

SDSe Structural Engineers

DEVELOPMENT ONE, INC.
1611 East Fourth Street, Suite 250
Santa Ana, California 92701
J. Bruce Camino, Architect, AIA, NCARB
(714) 689-0298
(714) 648-0197 FAX

DATE	SYM	REVISION	BY	A'PD

NATIONAL AERONAUTICS AND SPACE ADMINISTRATION

DRYDEN FLIGHT RESEARCH CENTER
EDWARDS, CA

DRAWING TITLE

FOUNDATION DETAILS

PROJECT TITLE 8-18-11

FACILITIES SUPPORT CENTER
100% FINAL DESIGN SUBMITTAL

APPROVALS	DATE
Chief, Facilities Engineering Branch, Office DAN CROWLEY	8-18-11
Project Requestor /Customer DAN CROWLEY	8-18-11
Facilities Project Manager GEMMA FLORES	8-18-11
Chief, Office of Protective Services JOHN ZELLMER	8-18-11
Chief - Safety, Health, and Environmental Office DAN MULLEN	8-18-11
DFRC Chief Information Officer KEN NORLIN	8-18-11

DATE STRTD	11/01/10	DATE PRNTD	5/23/11
DRAWN BY		EDM-1703	
SCALE	AS NOTED	TRADE SH. No.	
FILE NAME		S6.0	SHEET No. 107 of 195

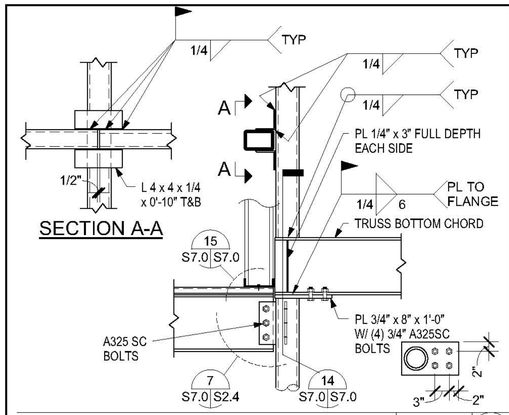

BEAM AND TRUSS AT COL — SCALE: 3/4" = 1'-0" — 13 S3.2 S7.0

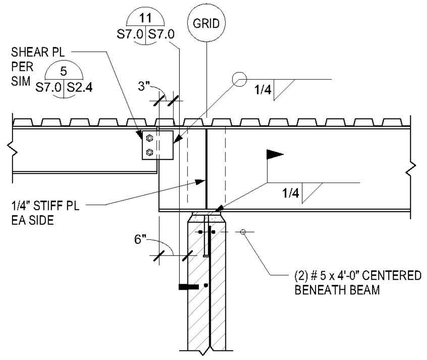

BEAM CANTILEVER AT ROOF — SCALE: 3/4" = 1'-0" — 10 S3.2 S7.0

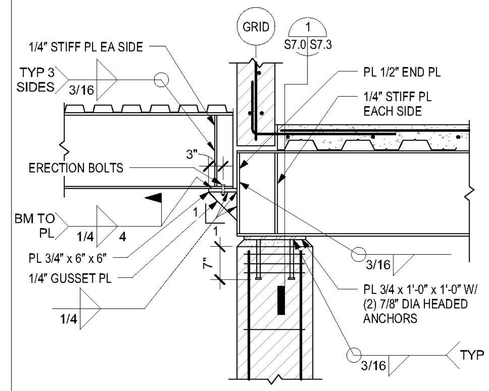

BEAM CANTILEVER — SCALE: 3/4" = 1'-0" — 7 S3.2 S7.0

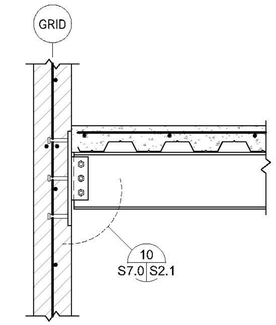

BEAM BRG AT CMU WALL — SCALE: 3/4" = 1'-0" — 4 S3.2 S7.0

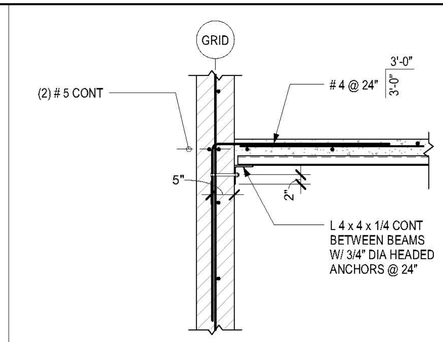

FLOOR DECK BRG AT CMU WALL — SCALE: 3/4" = 1'-0" — 1 S3.2 S7.0

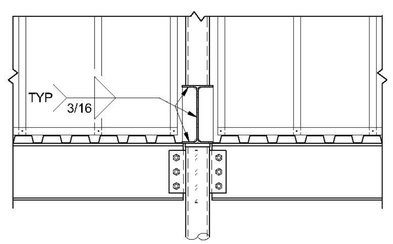

TRUSS BRG — SCALE: 3/4" = 1'-0" — 14 S7.0

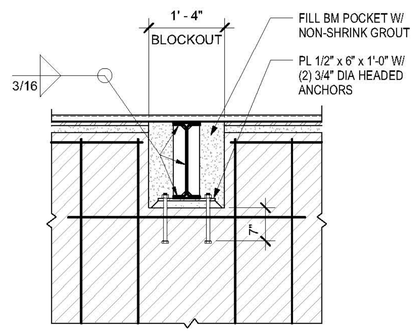

BEAM POCKET AT CMU WALL — SCALE: 3/4" = 1'-0" — 11 S7.0

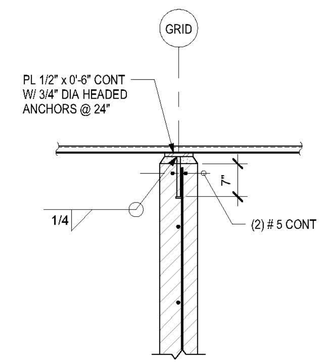

ROOF DECK BRG AT CMU WALL — SCALE: 3/4" = 1'-0" — 8 S3.2 S7.0

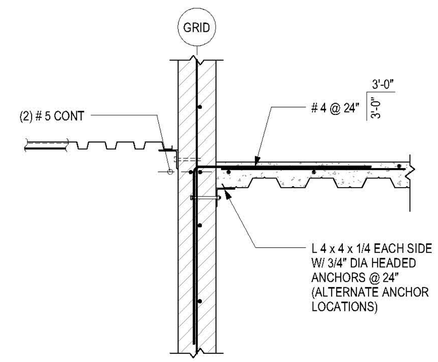

FLOOR AND ROOF AT CMU WALL — SCALE: 3/4" = 1'-0" — 5 S3.2 S7.0

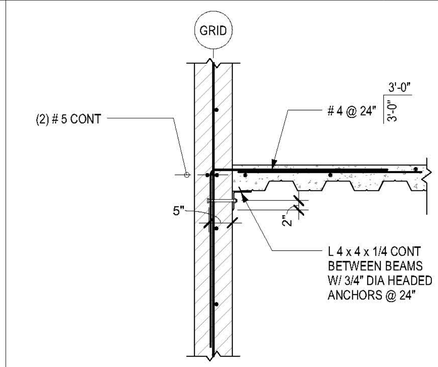

FLOOR DECK EDGE AT CMU WALL — SCALE: 3/4" = 1'-0" — 2 S3.2 S7.0

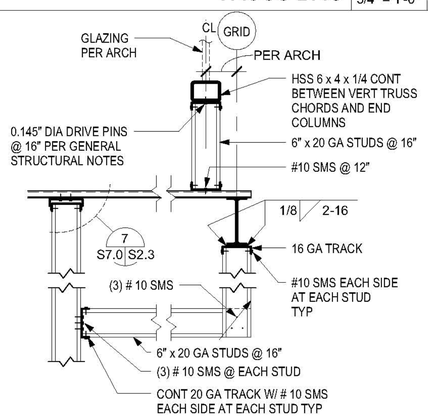

STUD SOFFIT FRAMING — SCALE: 3/4" = 1'-0" — 15 S3.2 S7.0

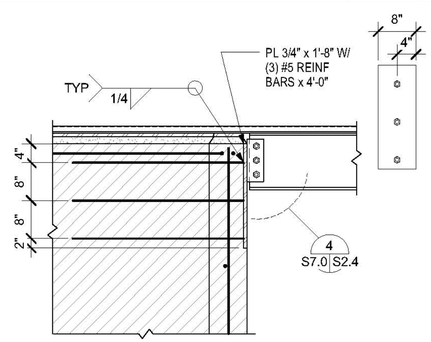

DRAG BEAM AT CMU WALL — SCALE: 3/4" = 1'-0" — 12 S3.2 S7.0

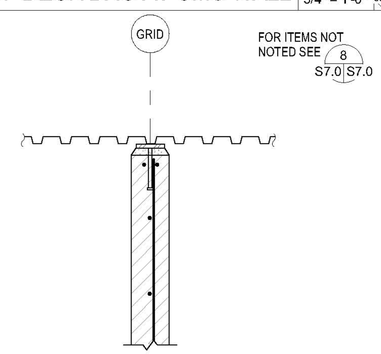

ROOF DECK AT CMU WALL — SCALE: 3/4" = 1'-0" — 9 S3.2 S7.0

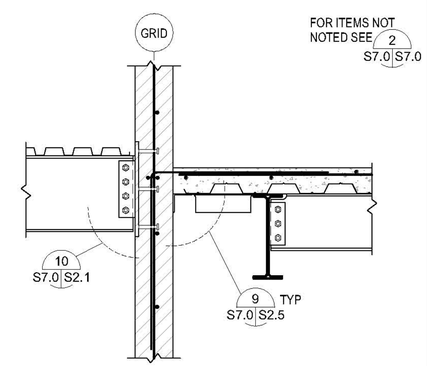

ROOF BM AT CMU WALL — SCALE: 3/4" = 1'-0" — 6 S3.2 S7.0

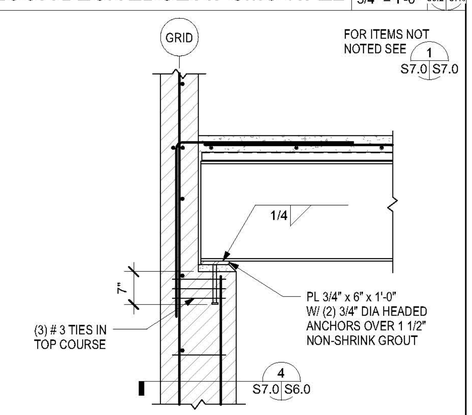

BEAM BRG AT PILASTER — SCALE: 3/4" = 1'-0" — 3 S3.2 S7.0

REGISTERED PROFESSIONAL ENGINEER — CHRISTOPHER M. WOLF — 2794 — Exp. 3 31 12 — STRUCTURAL — STATE OF CALIFORNIA

SDSE Structural Engineers

DEVELOPMENT ONE, INC.
1611 East Fourth Street, Suite 250
Santa Ana, California 92701
J. Bruce Camino, Architect, AIA, NCARB
(714) 689-0298
(714) 648-0197 FAX

DATE	SYM	REVISION	BY	A'PD

NATIONAL AERONAUTICS AND SPACE ADMINISTRATION

DRYDEN FLIGHT RESEARCH CENTER
EDWARDS, CA

DRAWING TITLE

FRAMING DETAILS

PROJECT TITLE 8-18-11

FACILITIES SUPPORT CENTER
100% FINAL DESIGN SUBMITTAL

APPROVALS	DATE
Chief, Facilities Engineering Division/Acting Chief, Office DAN CROWLEY	8-18-11
Project Requestor /Customer DAN CROWLEY	8-18-11
Facilities Project Manager GEMMA FLORES	8-18-11
Chief, Office of Protective Services JOHN ZELLMER	8-18-11
Chief - Safety, Health, and Environmental Office DAN MULLEN	8-18-11
DFRC Chief Information Officer KEN NORLIN	8-18-11

DATE STRTD	11/01/10	DATE PRNTD	5/23/11
DRAWN BY		EDM-1703	
SCALE	AS NOTED	TRADE SH. No.	S7.0
FILE NAME		SHEET No. 106 of 195	

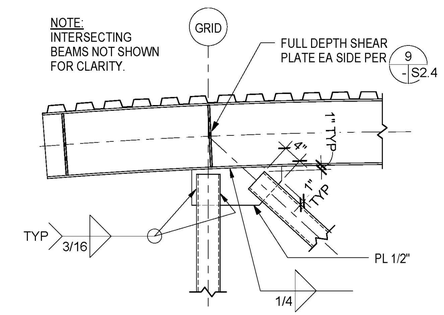

TRUSS TOP CHORD AT END — SCALE: 3/4" = 1'-0" — 13 / S3.4 S7.1

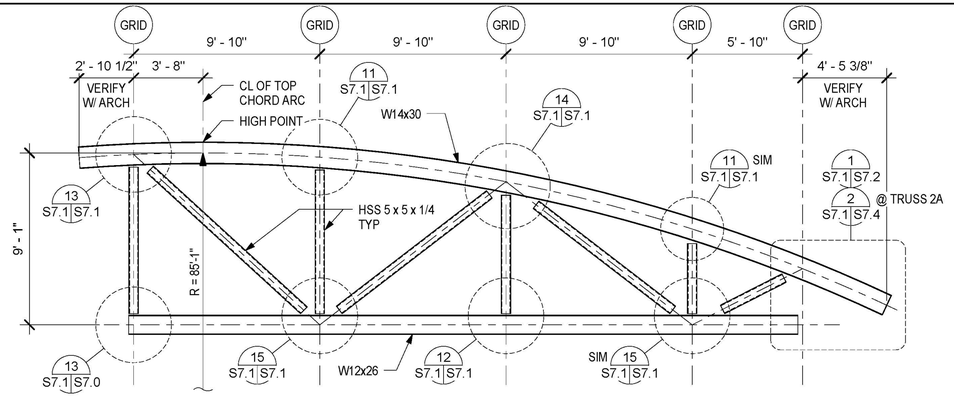

TRUSS 2 ELEVATION — SCALE: 1/4" = 1'-0" — 7 / S7.1

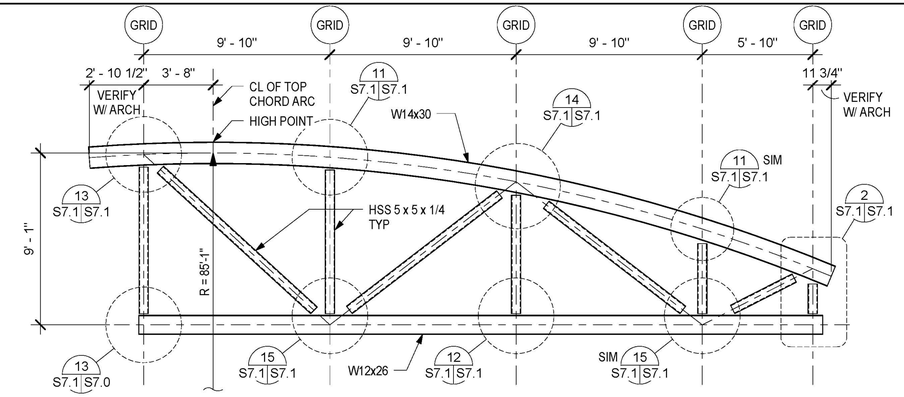

TRUSS 1 ELEVATION — SCALE: 1/4" = 1'-0" — 1 / S7.1

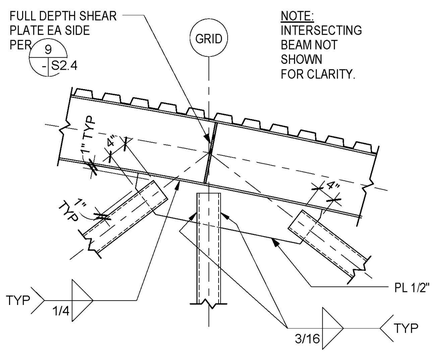

TRUSS TOP CHORD AT VERT/ DIAG — SCALE: 3/4" = 1'-0" — 14 / S7.1

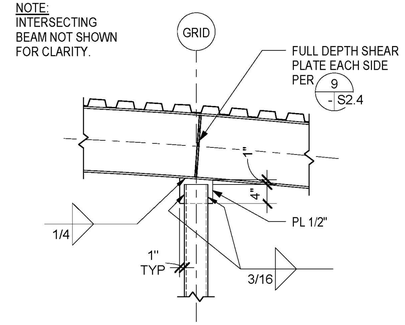

TRUSS TOP CHORD AT VERTICAL — SCALE: 3/4" = 1'-0" — 11 / S7.1

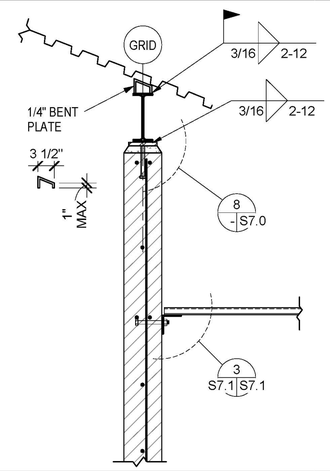

METAL DECK AT CMU WALL — SCALE: 3/4" = 1'-0" — 8 / S3.2 S7.1

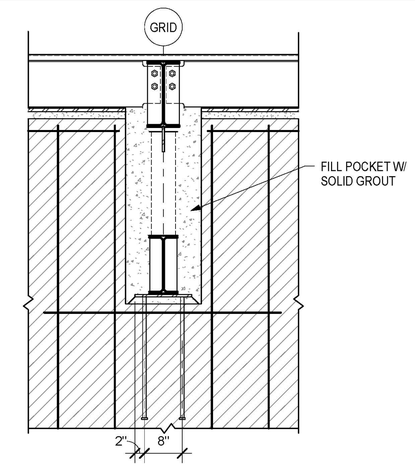

TRUSS POCKET AT CMU WALL — SCALE: 3/4" = 1'-0" — 5 / S7.1

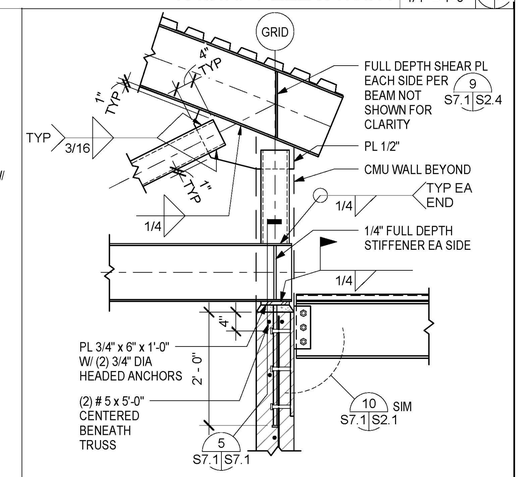

TRUSS BRG AT CMU WALL — SCALE: 3/4" = 1'-0" — 2 / S3.2 S7.1

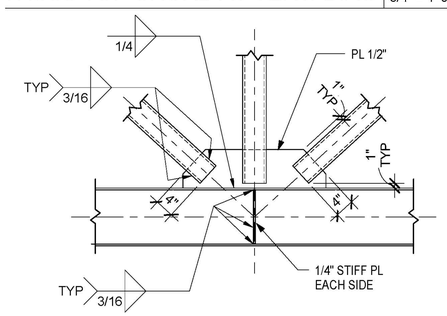

TRUSS BOT CHORD AT VERT/DIAG — SCALE: 3/4" = 1'-0" — 15 / S7.1

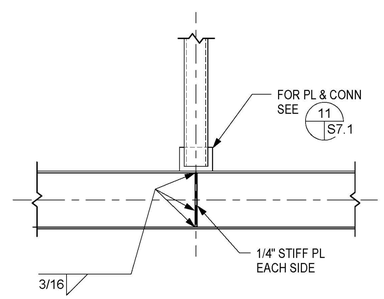

TRUSS BOT CHORD AT VERT — SCALE: 3/4" = 1'-0" — 12 / S7.1

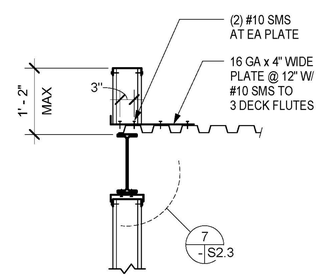

METAL STUD PARAPET — SCALE: 3/4" = 1'-0" — 9 / S3.2 S7.1

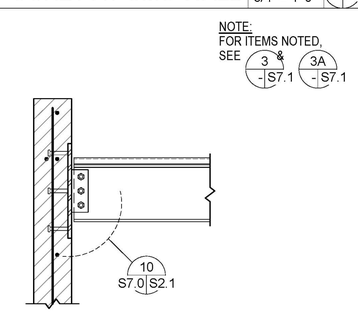

BEAM TO CMU CONNECTION — SCALE: 3/4" = 1'-0" — 6 / S3.2 S7.1

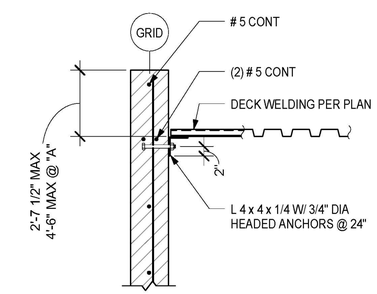

DECK BRG AT WALL — SCALE: 3/4" = 1'-0" — 3A / S3.4 S7.1 — 3 / S7.1

SECTION PROFESSIONAL ENGINEER CHRISTOPHER A. JOHNSON 2794 Exp. 3-31-12 STRUCTURAL STATE OF CALIFORNIA

SDSE Structural Engineers

DEVELOPMENT ONE, INC.
1611 East Fourth Street, Suite 250
Santa Ana, California 92701
J. Bruce Camino, Architect, AIA, NCARB
(714) 689-0298
(714) 648-0197 FAX

DATE	SYM	REVISION	BY	A'PD

NATIONAL AERONAUTICS AND SPACE ADMINISTRATION

DRYDEN FLIGHT RESEARCH CENTER
EDWARDS, CA

DRAWING TITLE

FRAMING DETAILS

PROJECT TITLE 8-18-11

FACILITIES SUPPORT CENTER
100% FINAL DESIGN SUBMITTAL

APPROVALS	DATE
Chief, Facilities Engineering & Assist Mgr, Office DAN CROWLEY	8-18-11
Project Requestor /Customer DAN CROWLEY	8-18-11
Facilities Project Manager GEMMA FLORES	8-18-11
Chief, Office of Protective Services JOHN ZELLMER	8-18-11
Chief - Safety, Health, and Environmental Office DAN MULLEN	8-18-11
DFRC Chief Information Officer KEN NORLIN	8-18-11

DATE STRTD	11/11/10	DATE PRNTD	5/23/11
DRAWN BY		EDM-1703	
SCALE	AS NOTED	TRADE SH. No.	S7.1
FILE NAME		SHEET No. 109 of 195	

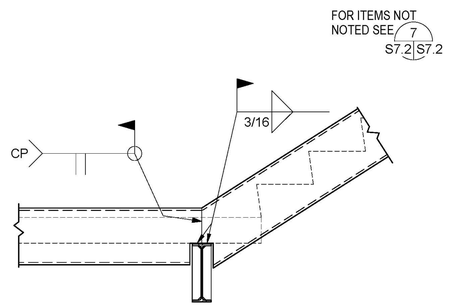

STAIR AT LANDING EDGE UP — SCALE: 3/4" = 1'-0" — 10 S7.2

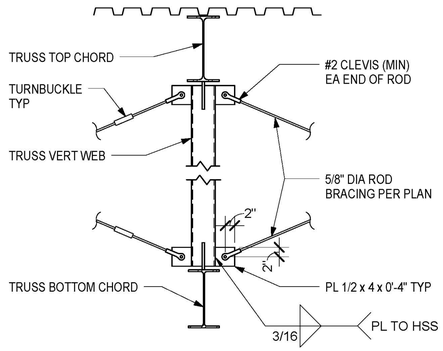

ROD BRACING CONNECTIONS — SCALE: 3/4" = 1'-0" — 6 S7.2

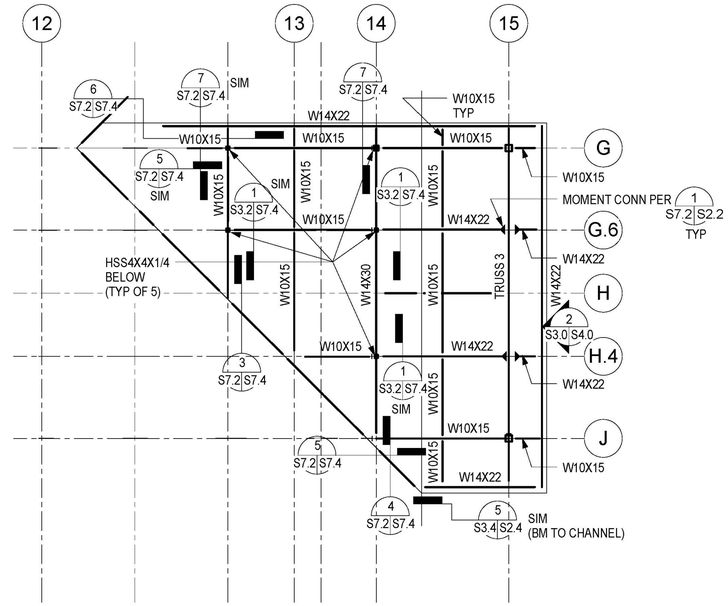

CANOPY FRAMING PLAN — SCALE: 1/8" = 1'-0" — 4 S7.2

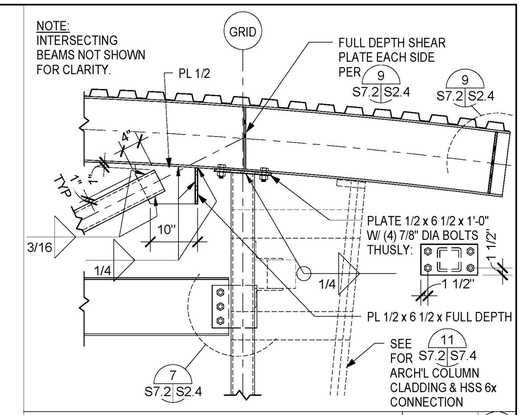

TRUSS BRG AT COLUMN — SCALE: 3/4" = 1'-0" — 1 S3.4 S7.2

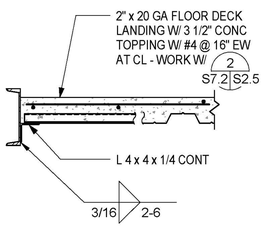

STAIR LANDING EDGE — SCALE: 3/4" = 1'-0" — 11 S7.2

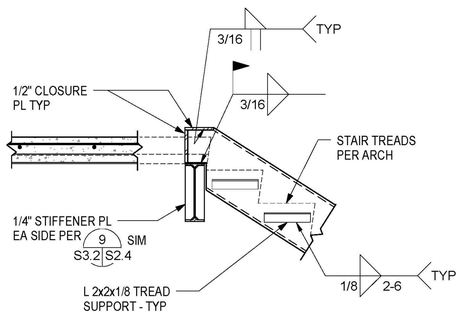

STAIR AT FLOOR DN — SCALE: 3/4" = 1'-0" — 7 S3.2 S7.2

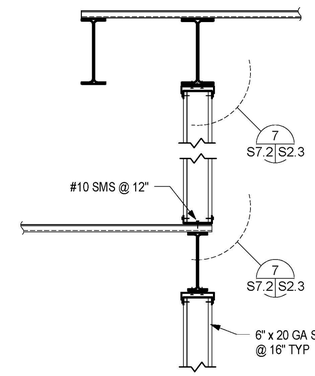

HIGH/LOW ROOF AT STUD WALL — SCALE: 3/4" = 1'-0" — 2 S3.2 S7.2

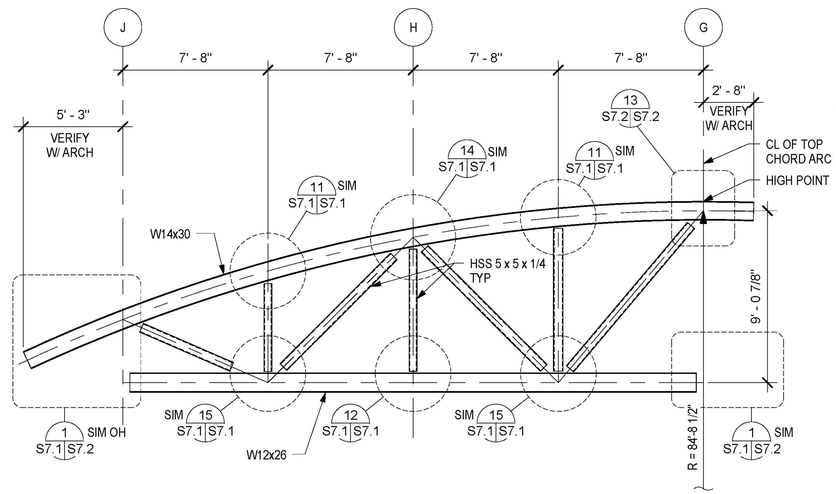

TRUSS 3 ELEVATION — SCALE: 1/4" = 1'-0" — 5 S7.2

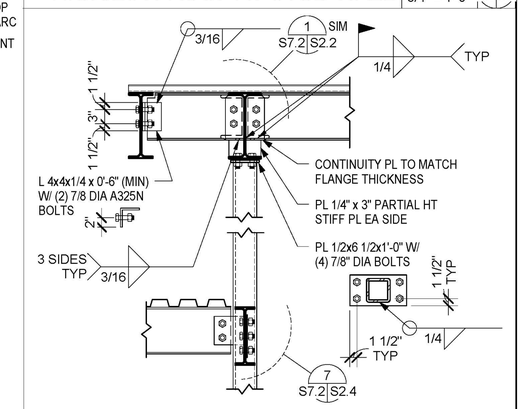

HIGH/LOW ROOF AT COLUMN — SCALE: 3/4" = 1'-0" — 3 S3.2 S7.2

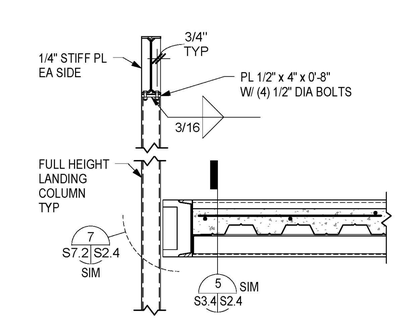

COLUMN AT STAIR LANDING — SCALE: 3/4" = 1'-0" — 12 S3.2 S7.2

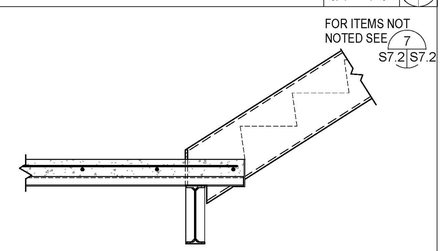

STAIR AT LANDING UP — SCALE: 3/4" = 1'-0" — 8 S3.2 S7.2

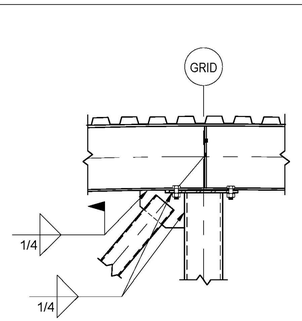

TRUSS WEB TO COLUMN — SCALE: 3/4" = 1'-0" — 13 S7.2

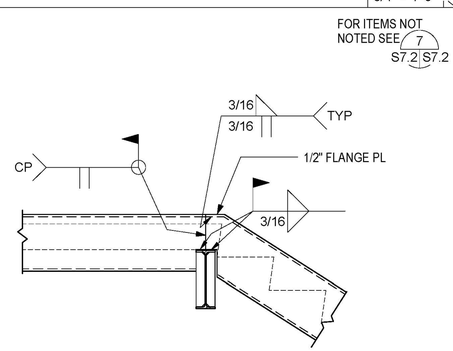

STAIR AT LANDING EDGE DN — SCALE: 9 S7.2

SECTION PROFESSIONAL ENGINEER CHRISTOPHER A. HARRAND 2794 Exp. 3-31-12 STRUCTURAL STATE OF CALIFORNIA

SDSE Structural Engineers

DEVELOPMENT ONE, INC.
1611 East Fourth Street, Suite 250
Santa Ana, California 92701
J. Bruce Camino, Architect, AIA, NCARB
(714) 689-0298
(714) 648-0197 FAX

DATE	SYM	REVISION	BY	A'PD

NATIONAL AERONAUTICS AND SPACE ADMINISTRATION

DRYDEN FLIGHT RESEARCH CENTER
EDWARDS, CA

DRAWING TITLE

FRAMING DETAILS

PROJECT TITLE 8-18-11

FACILITIES SUPPORT CENTER
100% FINAL DESIGN SUBMITTAL

APPROVALS	DATE
Chief, Facilities Engineering Branch, Office DAN CROWLEY	8-18-11
Project Requestor /Customer DAN CROWLEY	8-18-11
Facilities Project Manager GEMMA FLORES	8-18-11
Chief, Office of Protective Services JOHN ZELLMER	8-18-11
Chief - Safety, Health, and Environmental Office DAN MULLEN	8-18-11
DFRC Chief Information Officer KEN NORLIN	8-18-11

DATE STRTD	11/16/10	DATE PRINTD	5/23/11
DRAWN BY		EDM-1703	
SCALE	AS NOTED	TRADE SH. No.	
FILE NAME	S7.2	SHEET No. 110 of 195	