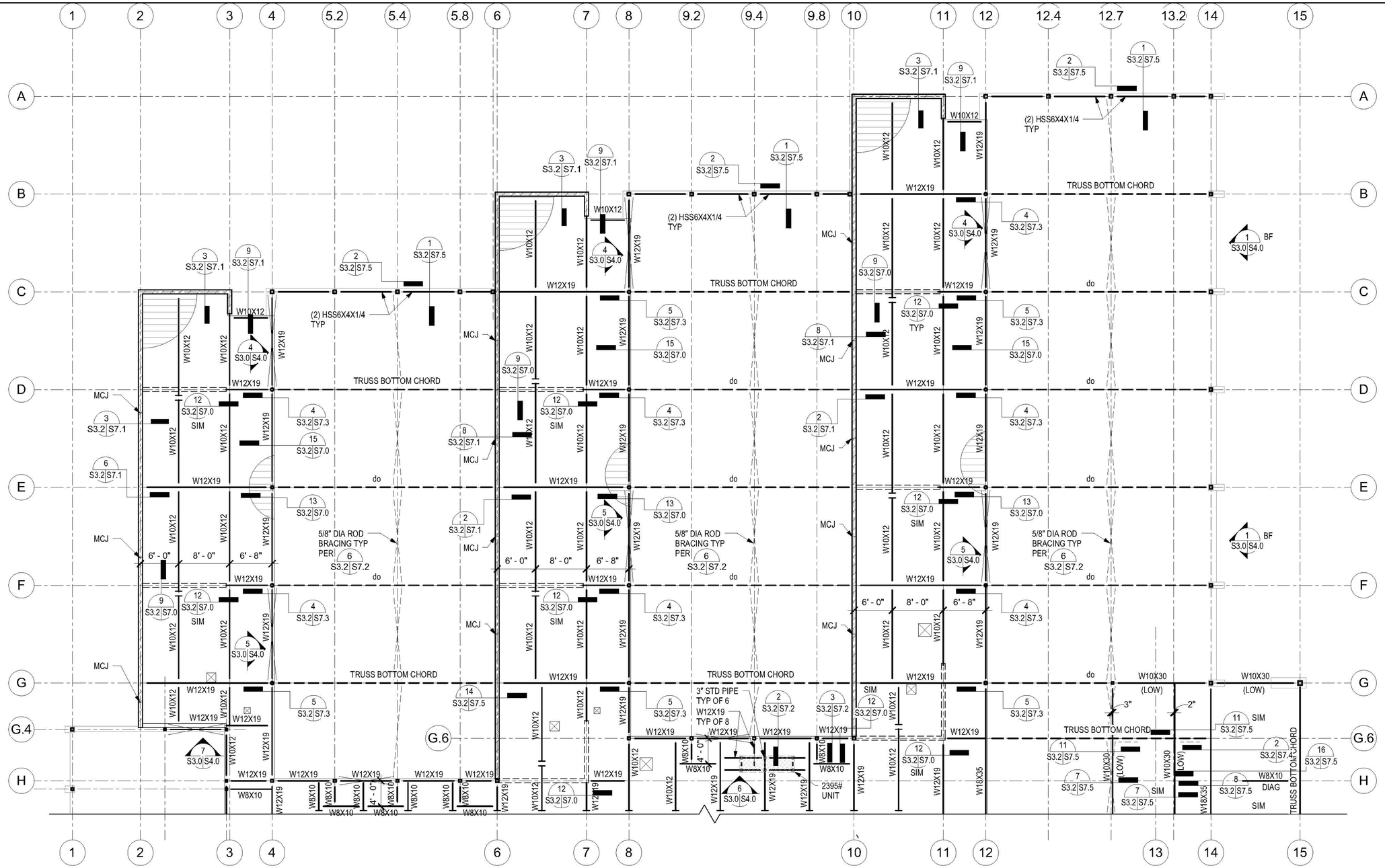

FRAMING NOTES:

1. ALL ELEVATIONS PER ARCH DRAWINGS
2. SEE TYPICAL DETAILS FOR TYPICAL CONDITIONS NOT INDICATED ON PLANS
3. FOR NON-BRG/NON-SHEAR WALL CONNECTION TO FLOOR & ROOF SEE 7 S3.2 S2.3 & 12 S3.2 S2.5

LEGEND:

- 1 1/2" x 20 GA METAL DECK - WORK W/ 1 S3.2 S2.5 TYPE A UNO
- 2" x 20 GA METAL DECK W/ 3 1/2" NORMAL WT CONC TOPPING W/ # 4 @ 16" EA WAY AT CL - WORK W/ 2 S3.2 S2.5
- ROOF OPENING - WORK W/ 9 S3.2 S2.5
- FOR SMALL OPENINGS NOT SUPPORTING EQUIPMENT SEE 6 S3.2 S2.5
- MECH UNITS - COORD W/ MECH
- BRACED FRAME ELEVATION
- W12X (10) INDICATES NUMBER OF WELDED STUDS WORK W/ 6 S3.2 S2.4
- 5/8" DIA ROD BRACING
- BEAM TO BEAM CONN PER PLAN
- 6" HOUSEKEEPING PAD PER 12 S3.2 S2.4
- NON-FRAME MOMENT CONN PER PLAN
- MCJ MASONRY CONTROL JOINT PER 1 S3.0 S2.1
- CMU WALL BENEATH ROOF
- BF BRACED FRAME ELEVATION
- ROOF COLLECTOR OR TRUSS ELEVATION

NORTH LOW ROOF FRAMING PLAN

SCALE: 1/8" = 1'-0" 1 S3.2

REGISTERED PROFESSIONAL ENGINEER CHRISTOPHER W. KAMP 2794 Exp. 3 31 12 STRUCTURAL STATE OF CALIFORNIA

SDSE Structural Engineers

DEVELOPMENT ONE, INC.
1611 East Fourth Street, Suite 250
Santa Ana, California 92701
J. Bruce Camino, Architect, AIA, NCARB
(714) 689-0298
(714) 648-0197 FAX

DATE	SYM	REVISION	BY	A'PD

NATIONAL AERONAUTICS AND SPACE ADMINISTRATION
DRYDEN FLIGHT RESEARCH CENTER
EDWARDS, CA

DRAWING TITLE
NORTH - LOW ROOF FRAMING PLAN

PROJECT TITLE 8-18-11
FACILITIES SUPPORT CENTER
100% FINAL DESIGN SUBMITTAL

APPROVALS	DATE
Chief, Facilities Engineering Assist. Mgmt. Office DAN CROWLEY	8-18-11
Project Requestor /Customer DAN CROWLEY	8-18-11
Facilities Project Manager GEMMA FLORES	8-18-11
Chief, Office of Protective Services JOHN ZELLMER	8-18-11
Chief - Safety, Health, and Environmental Office DAN MULLEN	8-18-11
DFRC Chief Information Officer KEN NORLIN	8-18-11

DATE STRTD	11/08/10	DATE PRNTD	5/23/11
DRAWN BY			EDM-1703
SCALE	AS NOTED	TRADE SH. No.	
FILE NAME		S3.2	SHEET No. 101 of 195

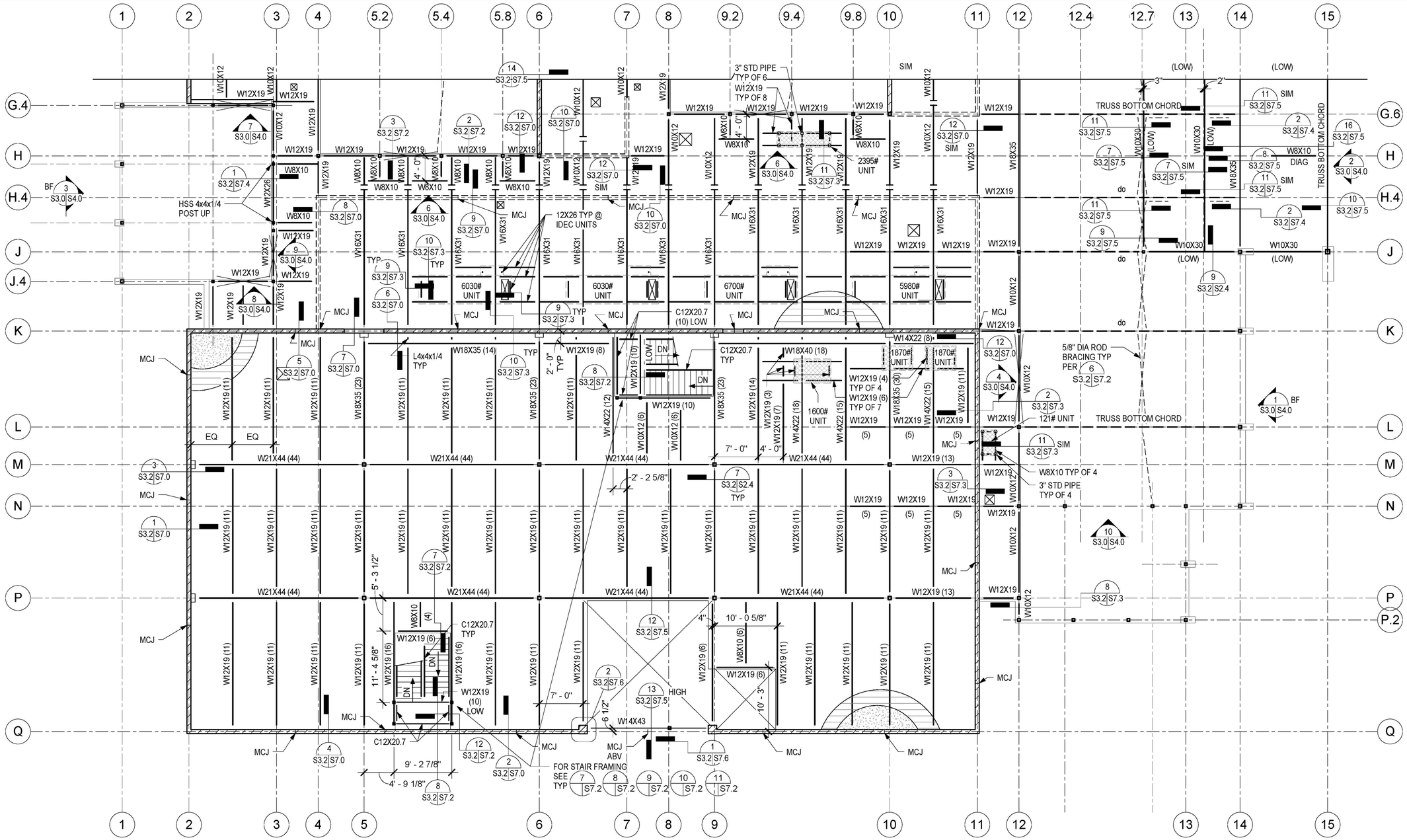

NOTE:

SEE S3.2 FOR LEGEND & FRAMING NOTES

SOUTH LOW ROOF AND MEZZANINE FRAMING PLAN

SCALE: 1/8" = 1'-0" — 1 / S3.3

REGISTERED PROFESSIONAL ENGINEER — STRUCTURAL — STATE OF CALIFORNIA — 2794 — Exp. 3-31-12

SDSE Structural Engineers

DEVELOPMENT ONE, INC.
1611 East Fourth Street, Suite 250
Santa Ana, California 92701
J. Bruce Camino, Architect, AIA, NCARB
(714) 689-0298
(714) 648-0197 FAX

DATE	SYM	REVISION	BY	A'PD

NATIONAL AERONAUTICS AND SPACE ADMINISTRATION
DRYDEN FLIGHT RESEARCH CENTER
EDWARDS, CA

DRAWING TITLE
SOUTH - LOW ROOF FRAMING PLAN AND MEZZANINE FRAMING PLAN

PROJECT TITLE
8-18-11
FACILITIES SUPPORT CENTER
100% FINAL DESIGN SUBMITTAL

APPROVALS	DATE
Chief, Facilities Engineering & Asset Mgmt. Office — DAN CROWLEY	8-18-11
Project Requestor /Customer — DAN CROWLEY	8-18-11
Facilities Project Manager — GEMMA FLORES	8-18-11
Chief, Office of Protective Services — JOHN ZELLMER	8-18-11
Chief - Safety, Health, and Environmental Office — DAN MULLEN	8-18-11
DFRC Chief Information Officer — KEN NORLIN	8-18-11

DATE STRTD	11/08/10	DATE PRNTD	5/23/11
DRAWN BY		EDM-1703	
SCALE	AS NOTED	TRADE SH. No.	
FILE NAME		S3.3	SHEET No. 102 of 196

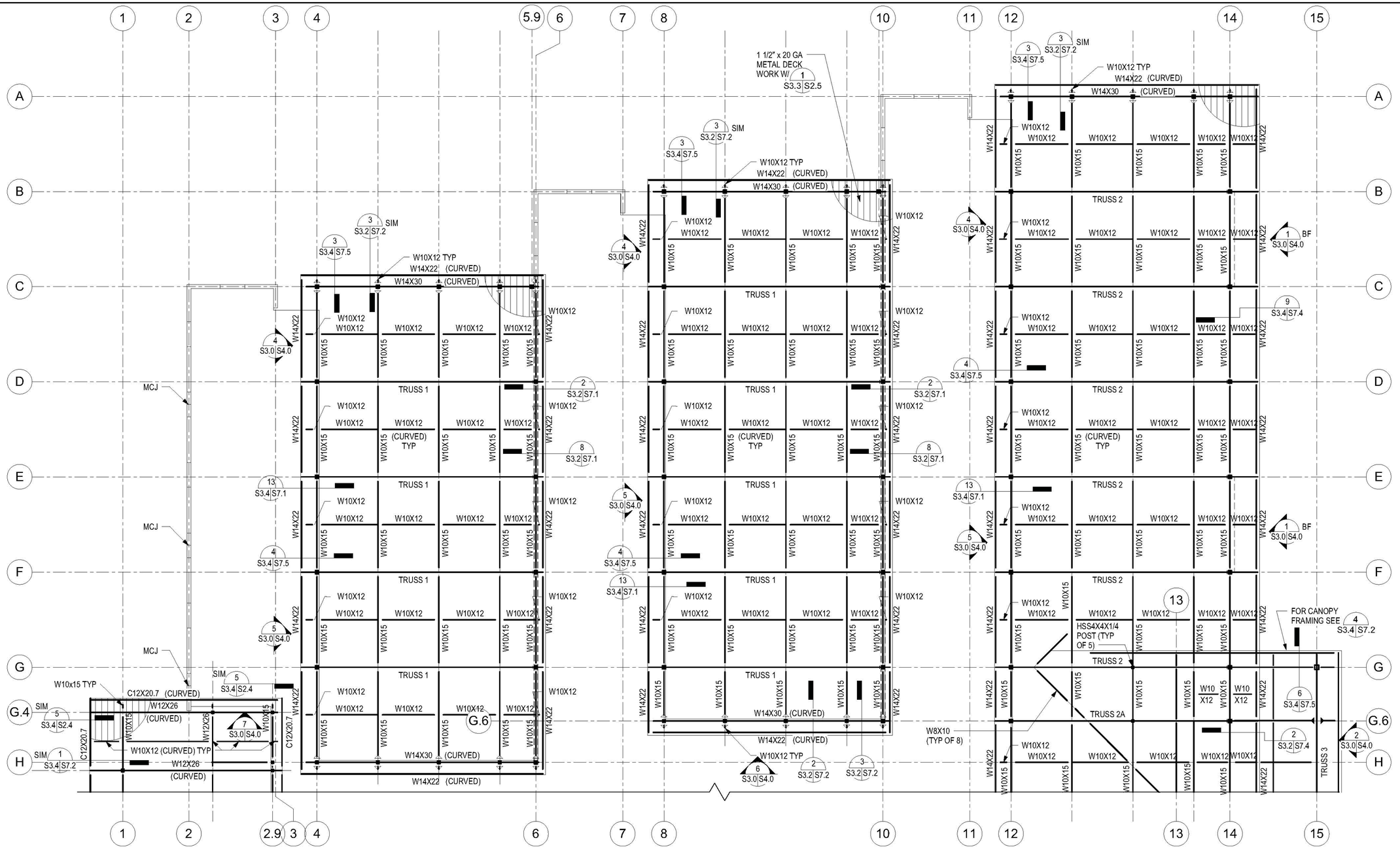

NOTE:

SEE S3.2 FOR LEGEND & FRAMING NOTES

NORTH HIGH ROOF FRAMING PLAN

SCALE: 1/8" = 1'-0" — 1 / S3.4

REGISTERED PROFESSIONAL ENGINEER — CHRISTOPHER W. KAMP — 2794 — Exp. 3 31 12 — STRUCTURAL — STATE OF CALIFORNIA

SDSE Structural Engineers

DEVELOPMENT ONE, INC.
1611 East Fourth Street, Suite 250
Santa Ana, California 92701
J. Bruce Camino, Architect, AIA, NCARB
(714) 689-0298
(714) 648-0197 FAX

DATE	SYM	REVISION	BY	A'PD

NATIONAL AERONAUTICS AND SPACE ADMINISTRATION
DRYDEN FLIGHT RESEARCH CENTER
EDWARDS, CA

DRAWING TITLE
NORTH - HIGH ROOF FRAMING PLAN

PROJECT TITLE 8-18-11
FACILITIES SUPPORT CENTER
100% FINAL DESIGN SUBMITTAL

APPROVALS	DATE
Chief, Facilities Engineering & Asset Mgmt. Office — DAN CROWLEY	8-18-11
Project Requestor /Customer — DAN CROWLEY	8-18-11
Facilities Project Manager — GEMMA FLORES	8-18-11
Chief, Office of Protective Services — JOHN ZELLMER	8-18-11
Chief - Safety, Health, and Environmental Office — DAN MULLEN	8-18-11
DFRC Chief Information Officer — KEN NORLIN	8-18-11

DATE STRTD	11/08/10	DATE PRNTD	5/23/11
DRAWN BY			EDM-1703
SCALE	AS NOTED	TRADE SH. No.	
FILE NAME		S3.4	SHEET No. 103 of 195

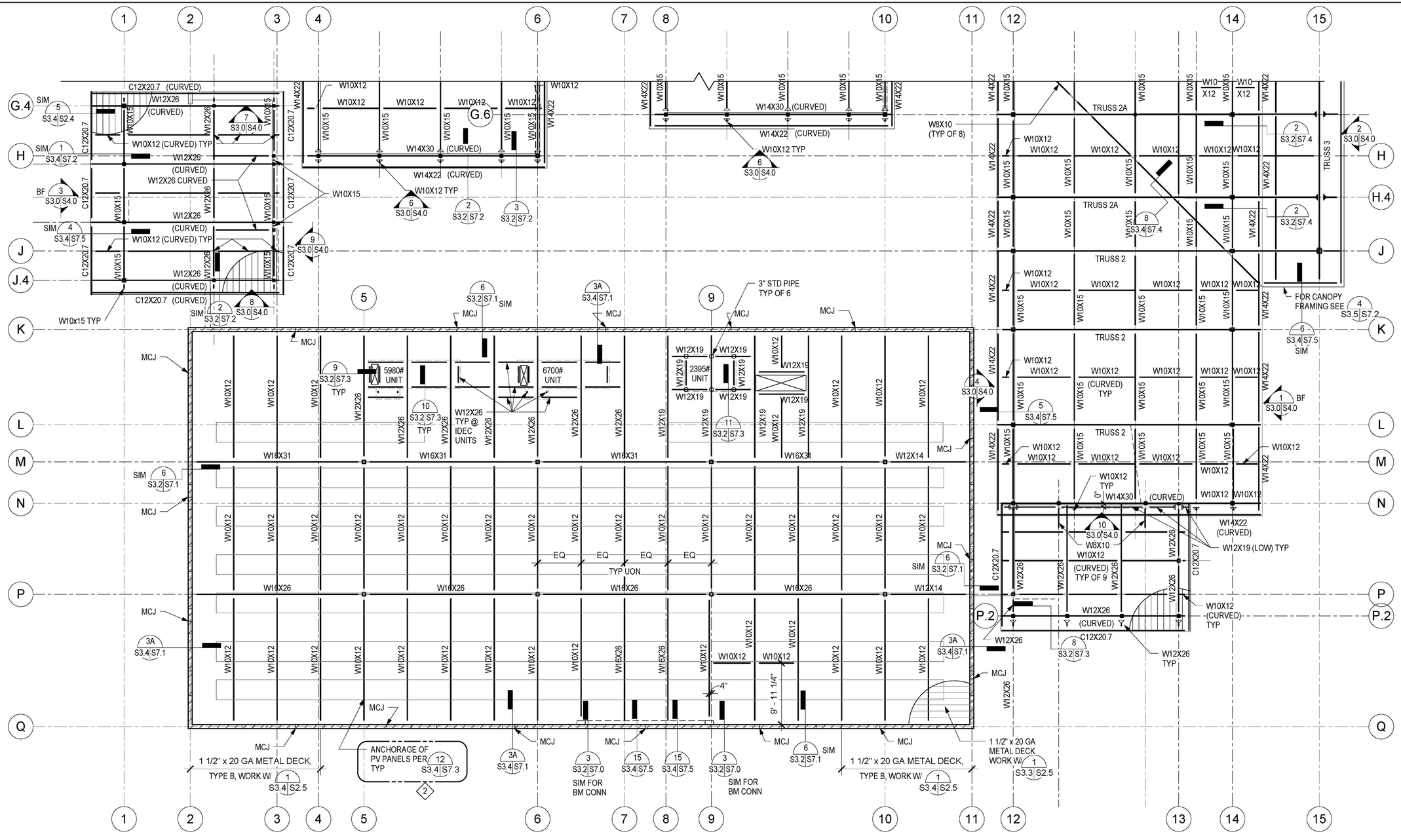

NOTE:

SEE S3.2 FOR LEGEND & FRAMING NOTES

SOUTH HIGH ROOF FRAMING PLAN

SCALE: 1/8" = 1'-0" (1 / S3.5)

SDSE Structural Engineers

DEVELOPMENT ONE, INC.
1611 East Fourth Street, Suite 250
Santa Ana, California 92701
J. Bruce Camino, Architect, AIA, NCARB
(714) 689-0298
(714) 648-0197 FAX

DATE	SYM	REVISION	BY	A'PD

NATIONAL AERONAUTICS AND SPACE ADMINISTRATION

DRYDEN FLIGHT RESEARCH CENTER
EDWARDS, CA

DRAWING TITLE

SOUTH - HIGH ROOF FRAMING PLAN

PROJECT TITLE 8-18-11

FACILITIES SUPPORT CENTER
100% FINAL DESIGN SUBMITTAL

APPROVALS	DATE
Chief, Facilities Engineering & Asset Mgmt Office DAN CROWLEY	8-18-11
Project Requestor /Customer DAN CROWLEY	8-18-11
Facilities Project Manager GEMMA FLORES	8-18-11
Chief, Office of Protective Services JOHN ZELLMER	8-18-11
Chief, Safety, Health, and Environmental Office DAN MULLEN	8-18-11
DFRC Chief Information Officer KEN NORLIN	8-18-11

DATE STRTD	11/08/10	DATE PRNTD	5/23/11
DRAWN BY		EDM-1703	
SCALE	AS NOTED	TRADE SH. No.	S3.5
FILE NAME		SHEET No. 104 of 196	

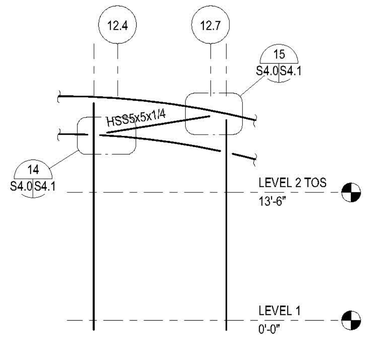

ROOF COLLECTOR ELEV 10 | SCALE: 1/8" = 1'-0" | 10 | S3.0 | S4.0

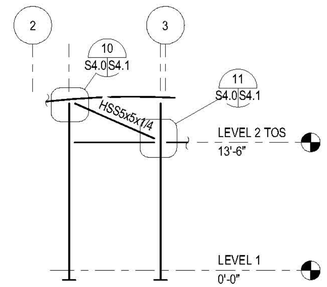

ROOF COLLECTOR ELEV 7 | SCALE: 1/8" = 1'-0" | 7 | S3.0 | S4.0

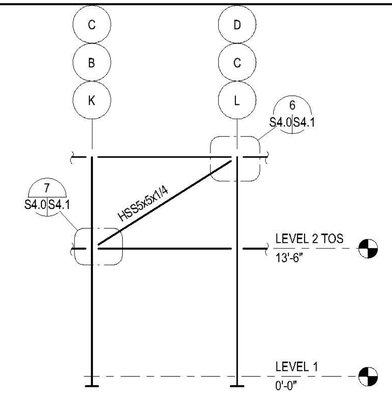

ROOF COLLECTOR ELEV 4 | SCALE: 1/8" = 1'-0" | 4 | S3.0 | S4.0

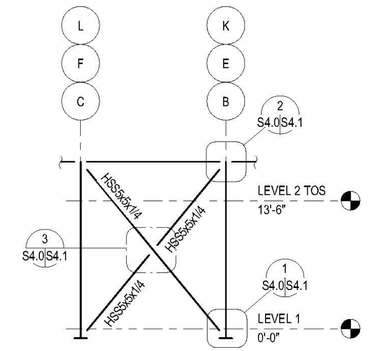

BRACED FRAME ELEV 1 | SCALE: 1/8" = 1'-0" | 1 | S3.0 | S4.0

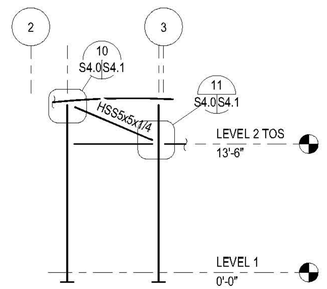

ROOF COLLECTOR ELEV 8 | SCALE: 1/8" = 1'-0" | 8 | S3.0 | S4.0

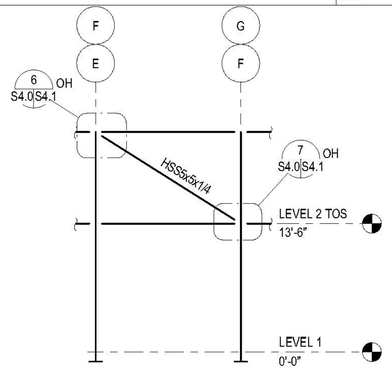

ROOF COLLECTOR ELEV 5 | SCALE: 1/8" = 1'-0" | 5 | S3.0 | S4.0

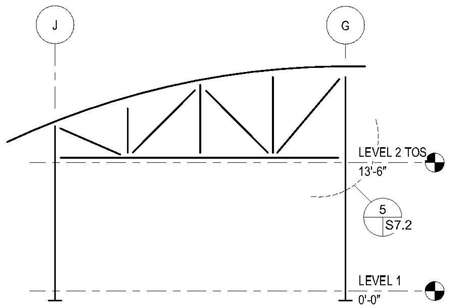

TRUSS ELEV 2 | SCALE: 1/8" = 1'-0" | 2 | S3.0 | S4.0

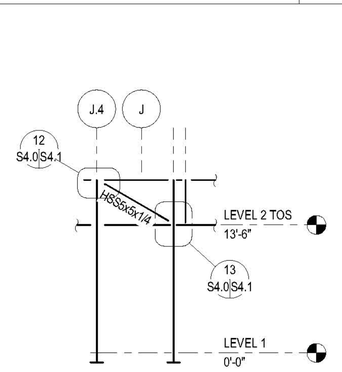

ROOF COLLECTOR ELEV 9 | SCALE: 1/8" = 1'-0" | 9 | S3.0 | S4.0

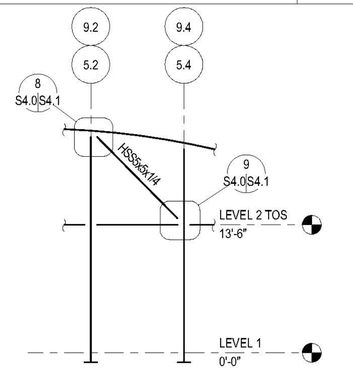

ROOF COLLECTOR ELEV 6 | SCALE: 1/8" = 1'-0" | 6 | S3.0 | S4.0

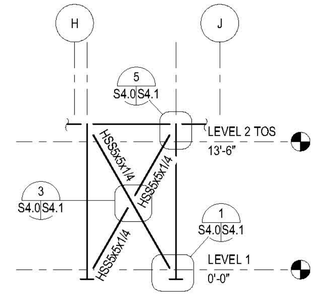

BRACED FRAME ELEV 3 | SCALE: 1/8" = 1'-0" | 3 | S3.0 | S4.0

REGISTERED PROFESSIONAL ENGINEER
CHRISTOPHER M. KAMP
No. 2794
Exp. 3 31 12
STRUCTURAL
STATE OF CALIFORNIA

SDSE
Structural Engineers

DEVELOPMENT ONE, INC.
1611 East Fourth Street, Suite 250
Santa Ana, California 92701
J. Bruce Camino, Architect, AIA, NCARB
(714) 689-0298
(714) 648-0197 FAX

DATE	SYM	REVISION	BY	A'PD

NATIONAL AERONAUTICS AND SPACE ADMINISTRATION
DRYDEN FLIGHT RESEARCH CENTER
EDWARDS, CA

DRAWING TITLE
LATERAL LOAD RESISTING BRACED FRAME AND ROOF DRAG ELEVATIONS

PROJECT TITLE 8-18-11
FACILITIES SUPPORT CENTER
100% FINAL DESIGN SUBMITTAL

APPROVALS	DATE
Chief, Facilities Engineering and Asset Mgmt Office **DAN CROWLEY**	8-18-11
Project Requestor /Customer **DAN CROWLEY**	8-18-11
Facilities Project Manager **GEMMA FLORES**	8-18-11
Chief, Office of Protective Services **JOHN ZELLMER**	8-18-11
Chief - Safety, Health, and Environmental Office **DAN MULLEN**	8-18-11
DFRC Chief Information Officer **KEN NORLIN**	8-18-11

DATE STRTD	11/01/10	DATE PRNTD	5/23/11
DRAWN BY		EDM-1703	
SCALE	AS NOTED	TRADE SH. No.	S4.0
FILE NAME		SHEET No. 105 of 195	