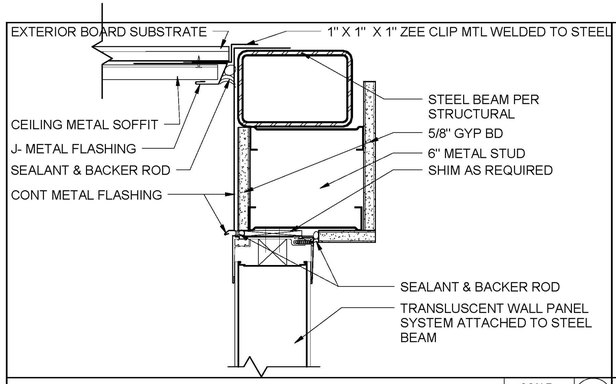

WINDOW HEAD DETAIL — SCALE: 3" = 1'-0" — 11 / A12.0 A10.2

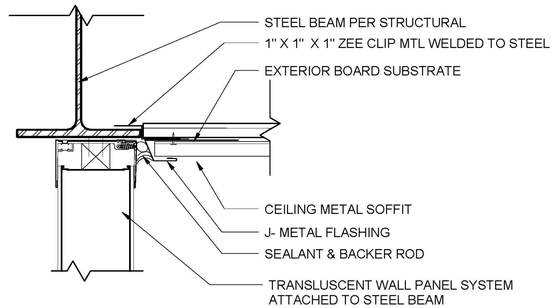

WINDOW HEAD @ STEEL — SCALE: 3" = 1'-0" — 7 / A6.6 A10.2

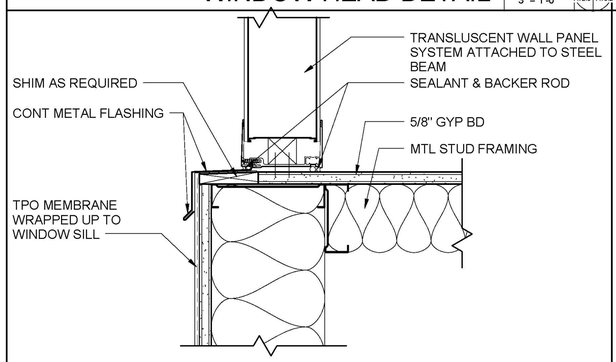

WINDOW SILL DETAIL — SCALE: 3" = 1'-0" — 12 / A12.0 A10.2

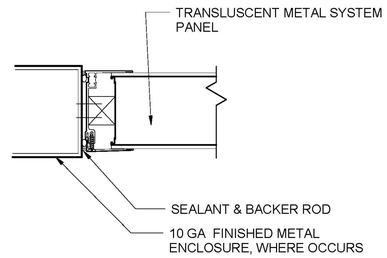

WINDOW JAMB @ MTL ENCLOSURE — SCALE: 3" = 1'-0" — 8 / A6.6 A10.2

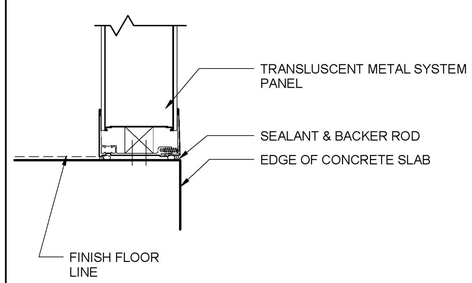

WINDOW SILL @ CONC FLOOR FIN — SCALE: 3" = 1'-0" — 9 / A6.6 A10.2

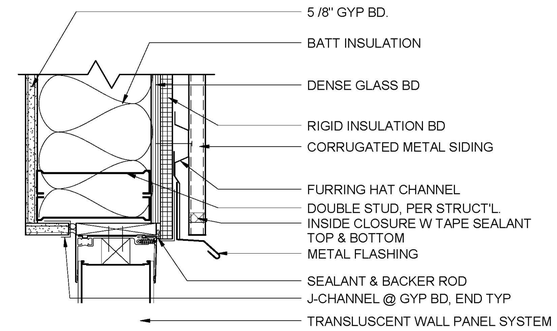

HEAD DTL @ MTL WALL CORR. SIDING — SCALE: 3" = 1'-0" — 4 / A12.0 A10.2

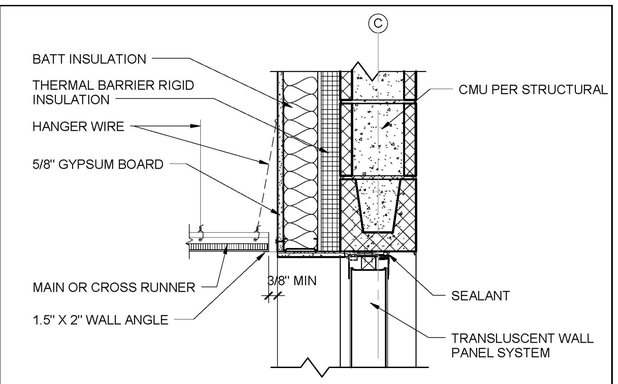

WINDOW HEAD DETAIL @ CMU — SCALE: 1 1/2" = 1'-0" — 1 / A6.7 A10.2

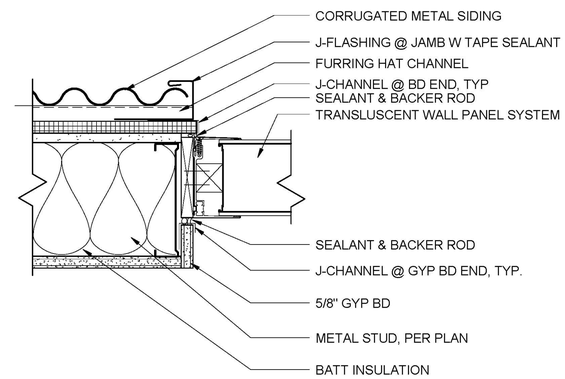

JAMB DTL @ MTL WALL CORR. SIDING — SCALE: 3" = 1'-0" — 5 / A10.2

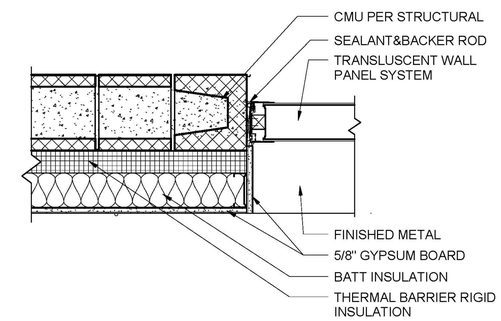

WINDOW JAMB DETAIL @ CMU — SCALE: 1 1/2" = 1'-0" — 2 / A10.2

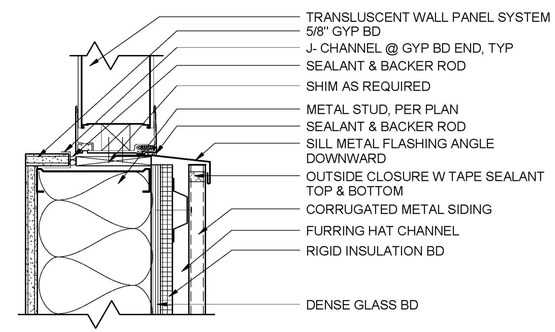

SILL DTL @ MTL WALL CORR. SIDING — SCALE: 3" = 1'-0" — 6 / A10.2

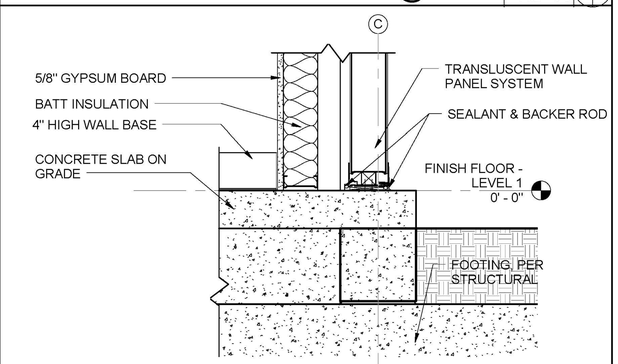

WINDOW SILL DETAIL — SCALE: 1 1/2" = 1'-0" — 3 / A6.7 A10.2

LICENSED ARCHITECT J. BRUCE CAMINO C23740 Signature 10/31/11 RenewalDate STATE OF CALIFORNIA

DEVELOPMENT ONE, INC.
1611 East Fourth Street, Suite 250
Santa Ana, California 92701
J. Bruce Camino, Architect, AIA, NCARB
(714) 689-0298
(714) 648-0197 FAX

DATE	SYM	REVISION	BY	A'PD

NATIONAL AERONAUTICS AND SPACE ADMINISTRATION

DRYDEN FLIGHT RESEARCH CENTER
EDWARDS, CA

DRAWING TITLE

WINDOW DETAILS

PROJECT TITLE 8-18-11

FACILITIES SUPPORT CENTER
100% FINAL DESIGN SUBMITTAL

APPROVALS		DATE
Chief, Facilities Engineering & Asset Mgmt Office DAN CROWLEY		8-18-11
Project Requestor /Customer DAN CROWLEY		8-18-11
Facilities Project Manager GEMMA FLORES		8-18-11
Chief, Office of Protective Services JOHN ZELLMER		8-18-11
Chief - Safety, Health, and Environmental Office DAN MULLEN		8-18-11
DFRC Chief Information Officer KEN NORLIN		8-18-11

DATE STRTD	03/08/11	DATE PRNTD	05/23/11
DRAWN BY		EDM-1703	
SCALE	AS NOTED	TRADE SH. No.	
FILE NAME		A10.2	SHEET No. 77 of 196

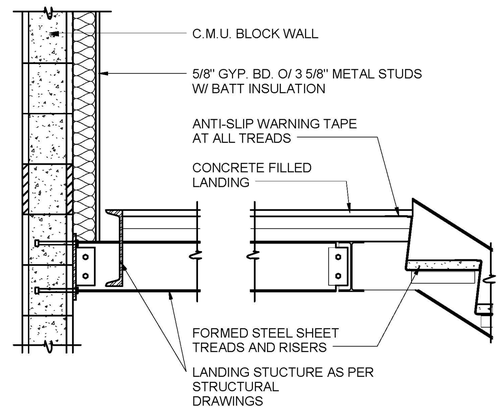

STAIR-LANDING SECTION

SCALE: 1" = 1'-0" | 5 | A10.3

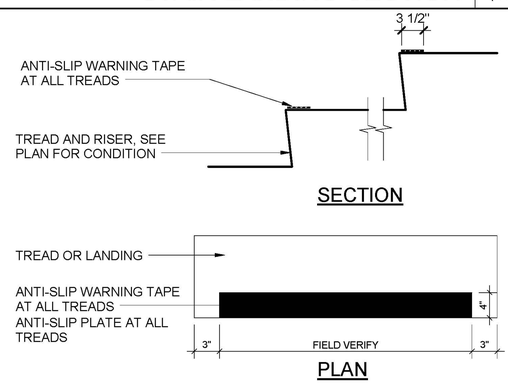

STAIR NOSING

SCALE: 1" = 1'-0" | 6 | A10.3

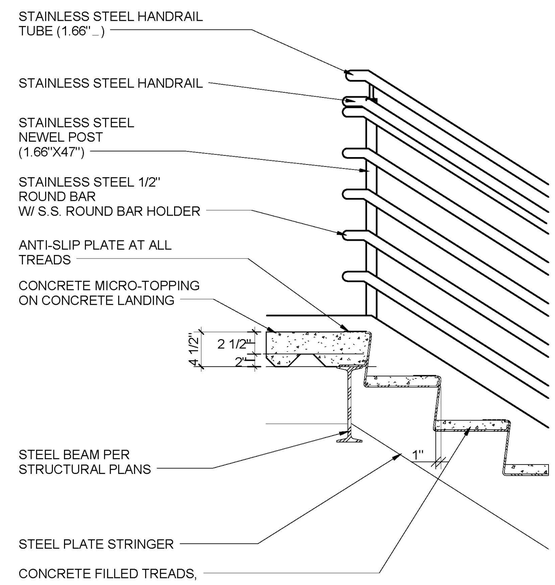

SECTION @ UPPER LANDING

SCALE: 1" = 1'-0" | 3 | A9.0 | A10.3

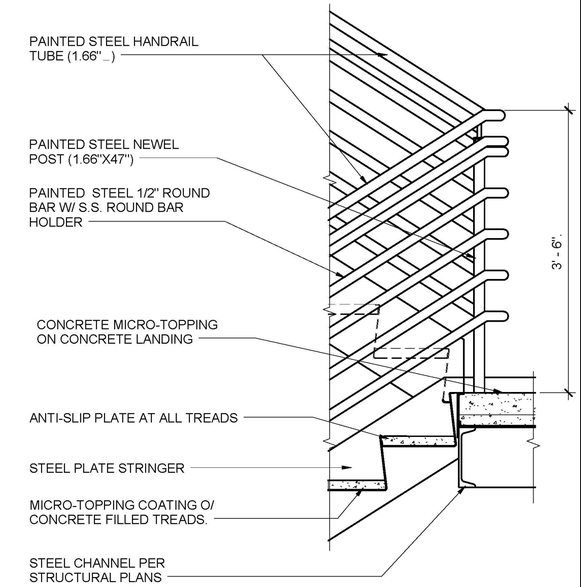

SECTION @ MIDDLE LANDING

SCALE: 1" = 1'-0" | 1 | A9.0 | A10.3

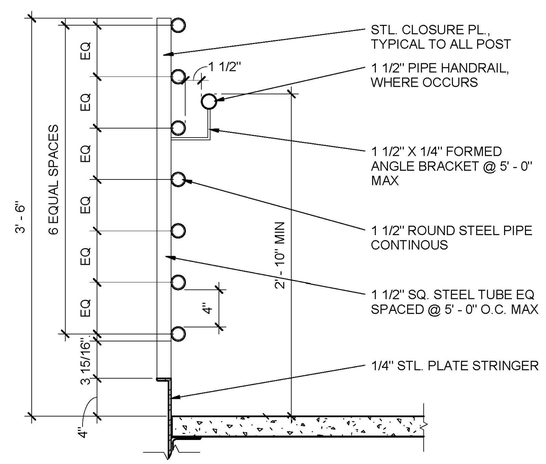

ROUND RAIL SECTION DETAIL

SCALE: 1 1/2" = 1'-0" | 4 | A10.3

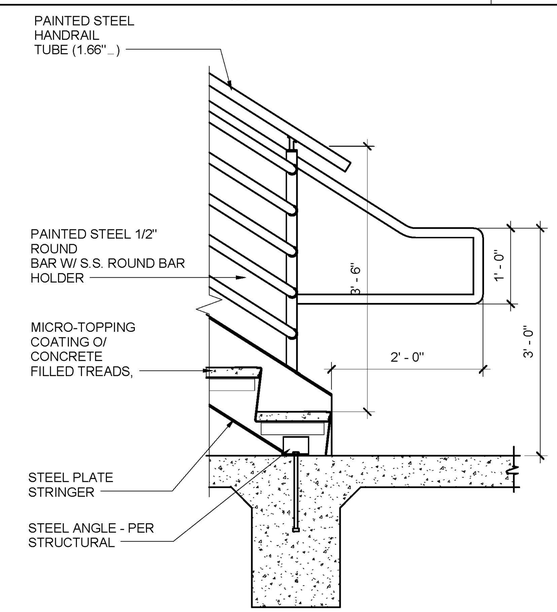

SECTION @ BOTTOM LANDING

SCALE: 1" = 1'-0" | 2 | A9.1 | A10.3

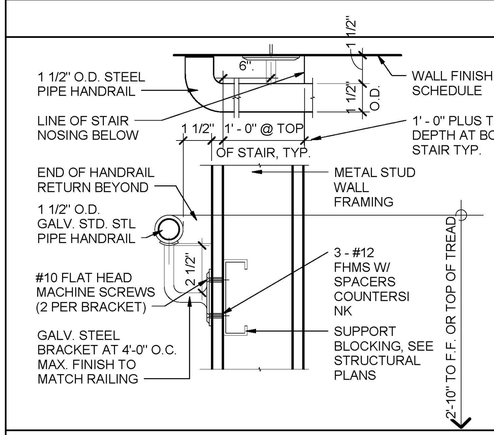

HANDRAIL WALL

SCALE: 3" = 1'-0" | 11 | A8.6 | A10.3

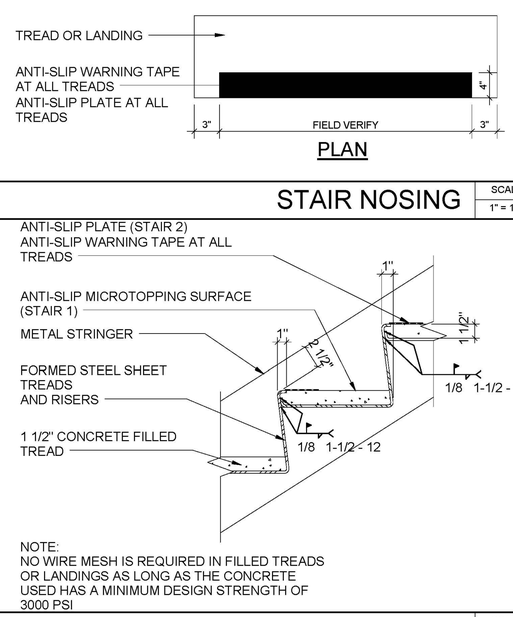

STAIR TREADS

SCALE: 1 1/2" = 1'-0" | 7 | A9.0 | A10.3

NOTE:
THE INFORMATION ON THE SIGN MUST BE PRESENTED WITH RAISED ARABIC NUMERALS AND CORRESPONDING GRADE II BRAILLE. THE MEZZANINE LEVELS SHALL HAVE THE LETTER "M" PRECEDING FLOOR NUMBER. BASEMENT LEVELS SHALL HAVE THE LETTER "B" PRECEDING THE FLOOR NUMBER.

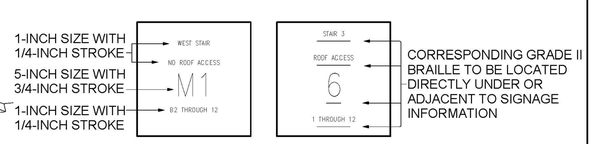

STAIR SIGNAGE

SCALE: 1 1/2" = 1'-0" | 8 | A10.3

LICENSED ARCHITECT
J. BRUCE CAMINO
C23740
Signature
10/31/11
RenewalDate
STATE OF CALIFORNIA

DEVELOPMENT ONE, INC.
1611 East Fourth Street, Suite 250
Santa Ana, California 92701
J. Bruce Camino, Architect, AIA, NCARB
(714) 689-0298
(714) 648-0197 FAX

DATE	SYM	REVISION	BY	A'PD

NATIONAL AERONAUTICS AND SPACE ADMINISTRATION

DRYDEN FLIGHT RESEARCH CENTER
EDWARDS, CA

DRAWING TITLE

STAIR DETAILS

PROJECT TITLE 8-18-11

FACILITIES SUPPORT CENTER
100% FINAL DESIGN SUBMITTAL

APPROVALS	DATE
Chief, Facilities Engineering Branch, Project Office DAN CROWLEY	8-18-11
Project Requestor /Customer DAN CROWLEY	8-18-11
Facilities Project Manager GEMMA FLORES	8-18-11
Chief, Office of Protective Services JOHN ZELLMER	8-18-11
Chief - Safety, Health, and Environmental Office DAN MULLEN	8-18-11
DFRC Chief Information Officer KEN NORLIN	8-18-11

DATE STRTD	11/09/10	DATE PRNTD	05/23/11
DRAWN BY		EDM-1703	
SCALE	AS NOTED	TRADE SH. No.	A10.3
FILE NAME		SHEET No. 78 of 196	

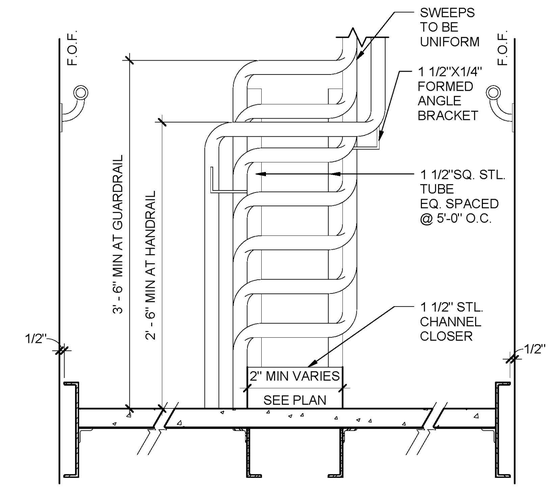

RAIL INSIDE RAILING TRANS-ELEV

SCALE: 1 1/2" = 1'-0" | 2 | A9.0 A9.1 | A10.4

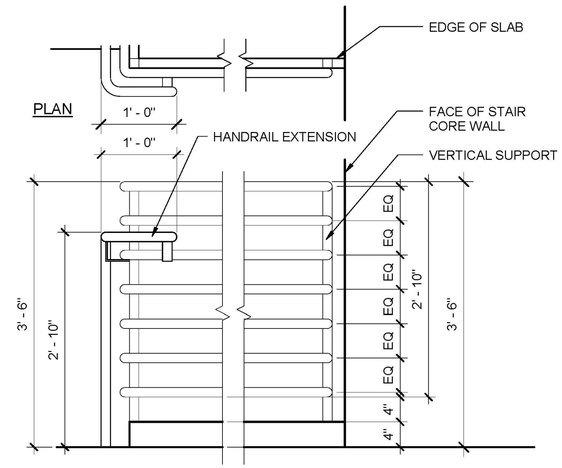

GUARDRAIL @ MEZZ LEVEL

SCALE: 1" = 1'-0" | 4 | A9.0 A9.1 | A10.4

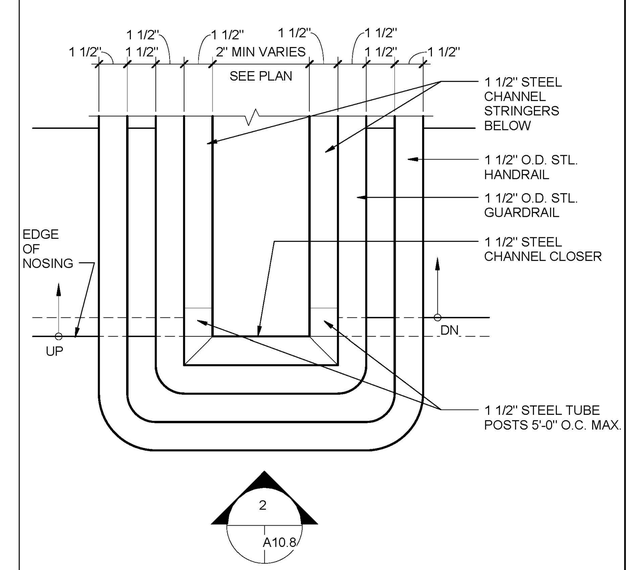

RAIL INSIDE RAILING TRANS - PLAN

SCALE: 3" = 1'-0" | 1 | A9.0 A9.1 | A10.4

LICENSED ARCHITECT
JOHN BRUCE CAMINO
C23740
Signature
10/31/11
RenewalDate
STATE OF CALIFORNIA

DEVELOPMENT ONE, INC.
1611 East Fourth Street, Suite 250
Santa Ana, California 92701
J. Bruce Camino, Architect, AIA, NCARB
(714) 689-0298
(714) 648-0197 FAX

DATE	SYM	REVISION	BY	A'PD

NATIONAL AERONAUTICS AND SPACE ADMINISTRATION

DRYDEN FLIGHT RESEARCH CENTER
EDWARDS, CA

DRAWING TITLE

STAIR DETAILS

PROJECT TITLE 8-18-11

FACILITIES SUPPORT CENTER
100% FINAL DESIGN SUBMITTAL

APPROVALS	DATE
Chief, Facilities Engineering & Assist Mgmt. Office DAN CROWLEY	8-18-11
Project Requestor /Customer DAN CROWLEY	8-18-11
Facilities Project Manager GEMMA FLORES	8-18-11
Chief, Office of Protective Services JOHN ZELLMER	8-18-11
Chief - Safety, Health, and Environmental Office DAN MULLEN	8-18-11
DFRC Chief Information Officer KEN NORLIN	8-18-11

DATE STRTD	11/09/10	DATE PRNTD	05/23/11
DRAWN BY		EDM-1703	
SCALE	AS NOTED	TRADE SH. No.	
FILE NAME		A10.4	SHEET No. 79 of 195

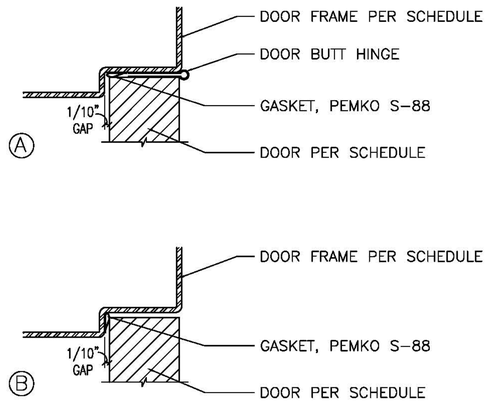

ACOUSTIC DOOR GASKET

SCALE: N.T.S. | 11 | A7.0 | A10.0

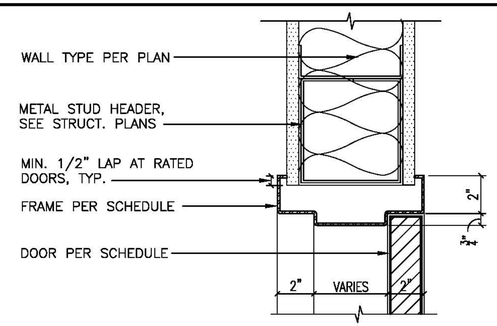

INT. DOOR HEAD

SCALE: 3"=1'-0" | 7 | A7.0 | A10.0

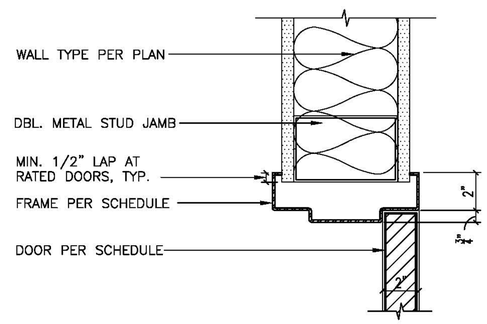

INT. DOOR JAMB

SCALE: 3"=1'-0" | 8 | A7.0 | A10.0

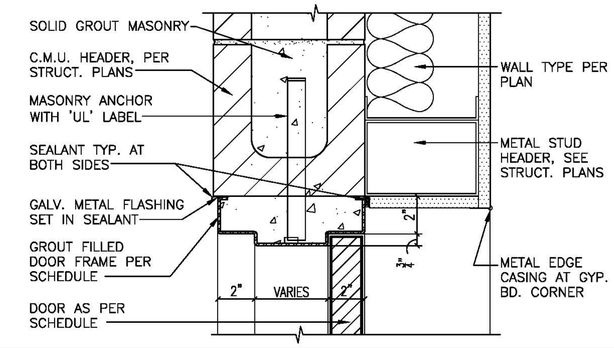

DOOR HEAD

SCALE: 3"=1'-0" | 4 | A7.0 | A10.0

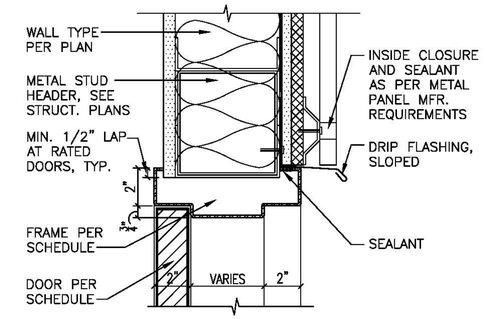

DOOR HEAD

SCALE: 3"=1'-0" | 1 | A7.0 | A10.0

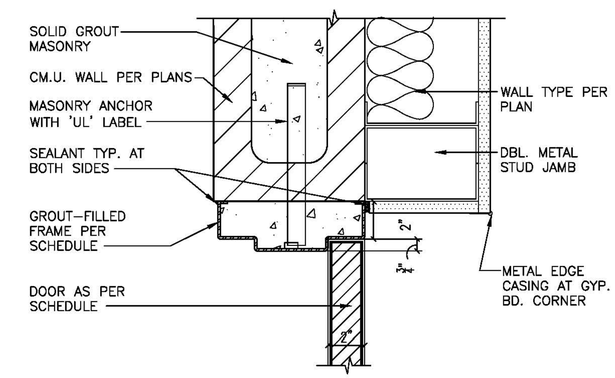

DOOR JAMB

SCALE: 3"=1'-0" | 5 | A7.0 | A10.0

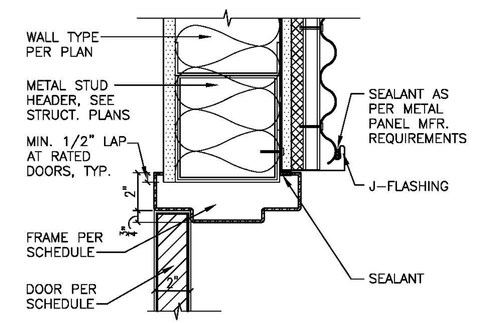

DOOR JAMB

SCALE: 3"=1'-0" | 2 | A7.0 | A10.0

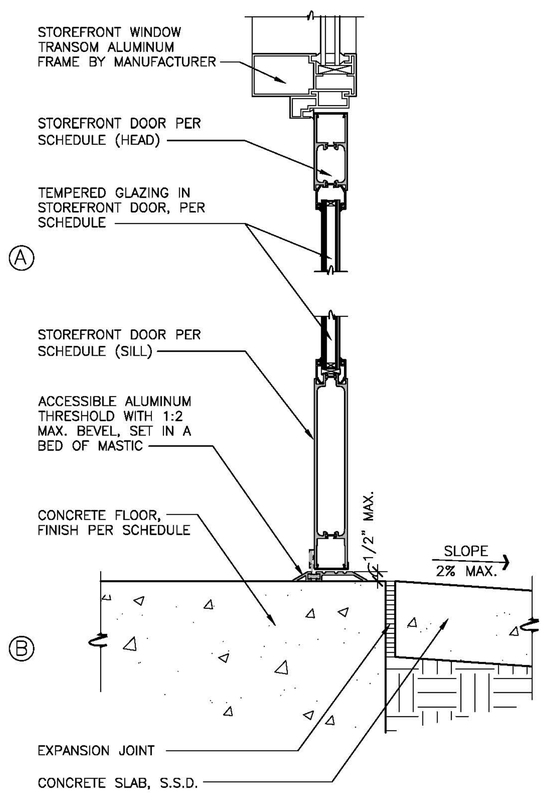

STOREFRONT DOOR

SCALE: 3"=1'-0" | 12 | A7.0 | A10.0

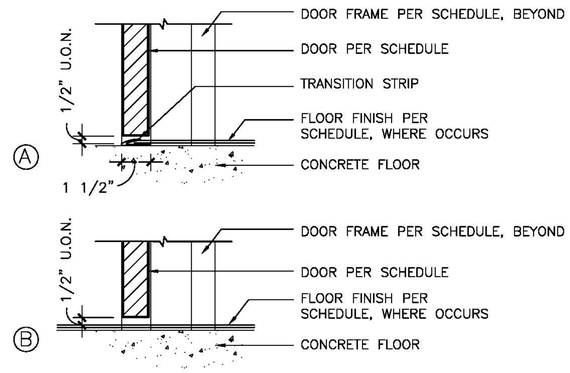

INTERIOR THRESHOLD

SCALE: 3"=1'-0" | 9 | A7.0 | A10.0

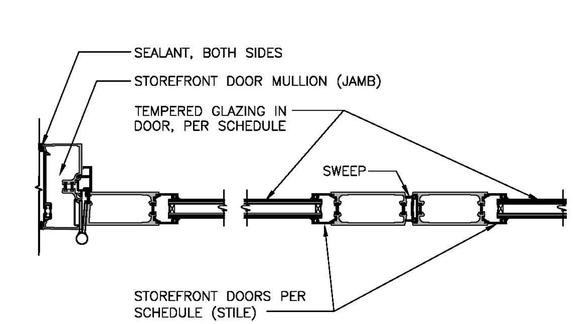

STOREFRONT DOOR

SCALE: 1 1/2"=1'-0" | 6 | A7.0 | A10.0

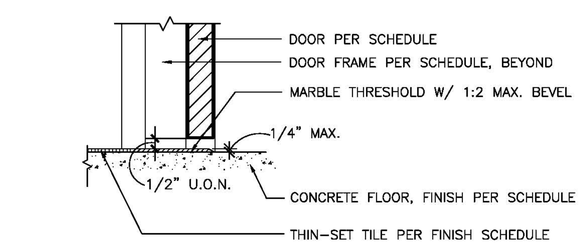

INTERIOR THRESHOLD

SCALE: 3"=1'-0" | 10 | A7.0 | A10.0

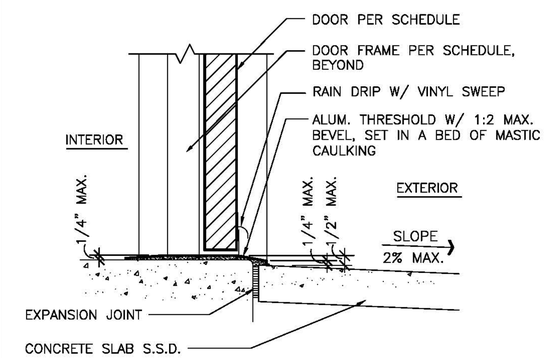

EXTERIOR THRESHOLD

SCALE: 3"=1'-0" | 3 | A7.0 | A10.0

LICENSED ARCHITECT
JOHN BRUCE CAMINO
C23740
Signature
10/31/11
Renewal Date
STATE OF CALIFORNIA

DEVELOPMENT ONE, INC.
1611 East Fourth Street, Suite 250
Santa Ana, California 92701
J.Bruce Camino, Architect, AIA, NCARB
(714) 689-0298
(714) 648-0197 FAX

DATE	SYM	REVISION	BY	A'PD

NATIONAL AERONAUTICS AND SPACE ADMINISTRATION
DRYDEN FLIGHT RESEARCH CENTER
EDWARDS, CA

DRAWING TITLE
DOOR DETAILS

PROJECT TITLE
8-18-11
FACILITIES SUPPORT CENTER
100% FINAL DESIGN SUBMITTAL

APPROVALS	DATE
Chief, Facilities Engineering & Asset Mngt. Office DAN CROWLEY	8-18-11
Project Requestor/Customer DAN CROWLEY	8-18-11
Facilities Project Manager GEMMA FLORES	8-18-11
Chief, Office of Protective Services JOHN ZELLMER	8-18-11
Chief – Safety, Health, and Environmental Office DAN MULLEN	8-18-11
DFRC Chief Information Officer KEN NORLIN	8-18-11

DATE STRTD	11/04/10	DATE PRNTD	5/23/11
DRAWN BY		EDM-1703	
SCALE	AS NOTED	TRADE SH. No.	A10.0
FILE NAME		SHEET No. 75 of 195	

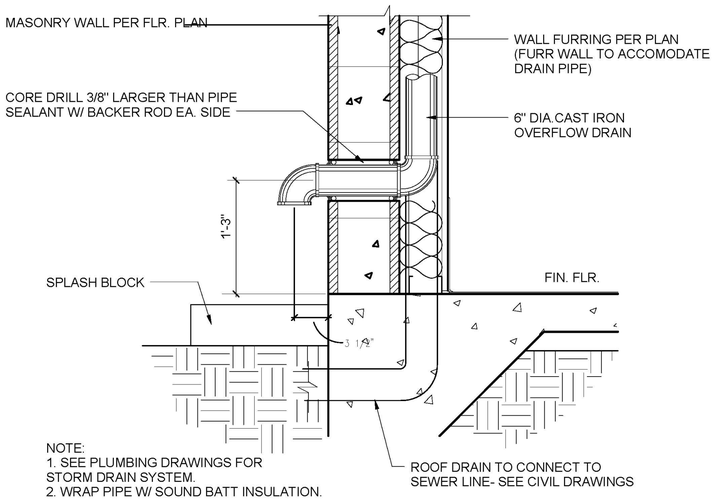

ROOF DRAIN/ OVERFLOW AT WALL BASE

SCALE: 1 1/2" = 1'-0" (5 / A4.0 A11.0)

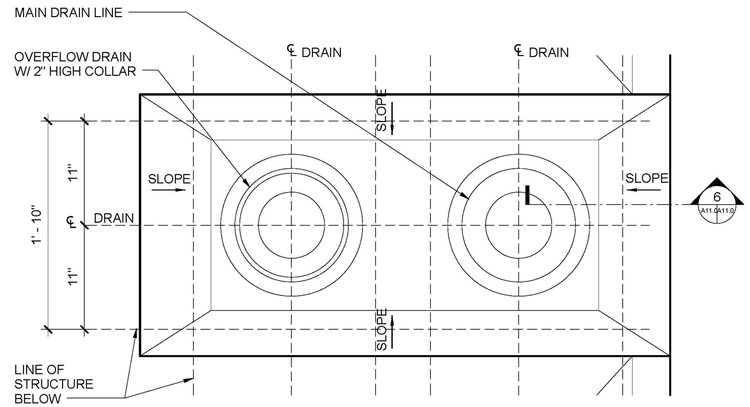

ROOF DRAIN PLAN

SCALE: 1 1/2" = 1'-0" (3 / A4.0 A11.0)

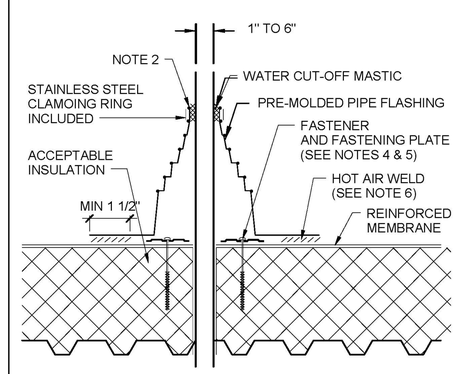

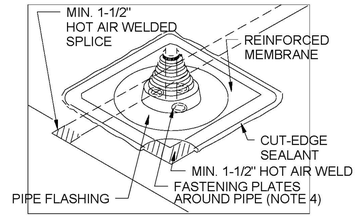

NOTES:

1. REMOVE ALL LEAD AND OTHER FLASHING.
2. TEMPERATURE OF PIPE MUST NOT EXCEED 120° F
3. PIPE SEAL MUST HAVE INTACT RIB AT TOP EDGE, REGARDLESS OF PIPE DIAMETER
4. INSTALL 3 FASTENERS AND PLATES AROUND PIPE EQUALLY SPACED. FASTENER MAY ALSO BE POSITIONED MAXIMUM 12" FROM PIPE, FASTENED 12" ON CENTER AND FLASHED WITH REINFORCED MEMBRANE
5. IF PLATES CANNOT BE INSTALLED AS SHOWN THEY CAN BE POSITIONED OUTSIDE THE PIPE FLASHING FLANGE
6. PIPE FLASHING DECK FLANGE MUST BE HOT AIR WELDED A MINIMUM OF 1 1/2" BEYOND FASTENING PLATES.
7. INSTALL A SECTION OF REINFORCED MEMBRANE OVER SPLICE INTERSECTIONS PRIOR TO INSTALLING PRE-MOLDED PIPE FLASHING.

PIPE PENETRATION

SCALE: 12" = 1'-0" (1 / A4.0 A11.0)

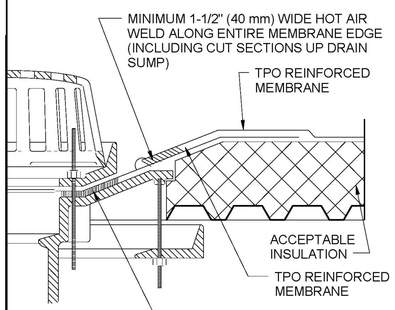

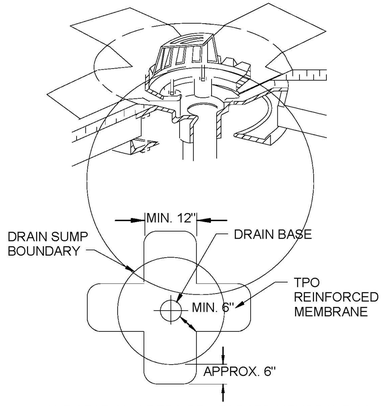

NOTES:

1. REMOVE ALL LEAD AND OTHER FLASHING.
2. ALL DRAIN BOLTS OR CLAMPS MUST BE IN PLACE TO PROVIDE COMPRESSION ON WATER CUT-OFF MASTIC.
3. CUT MEMBRANE SO IT EXTENDS A MINIMUM OF 1/2" FROM ATTACHMENT POINTS OF THE CLAMPING RING.
4. APPROXIMATELY 1/8" DIAMETER BEAD OF CUT-EDGE SEALANT IS REQUIRED ON CUT EDGES OF REINFORCED MEMBRANE.

1. CUT SECTION OF TPO REINFORCED MEMBRANE AS SHOWN AND POSITION INTO DRAIN SUMP. EXTEND MEMBRANE OUT OF DRAIN SUMP APPROXIMATELY 6" (ROUND CORNERS)
2. SEE PLUMBING AND CIVIL DRAWINGS FOR CONNECTION TO STORM DRAIN SYSTEM

ROOF DRAIN - PARTIAL SECTION

SCALE: 12" = 1'-0" (6 / A11.0 A11.0)

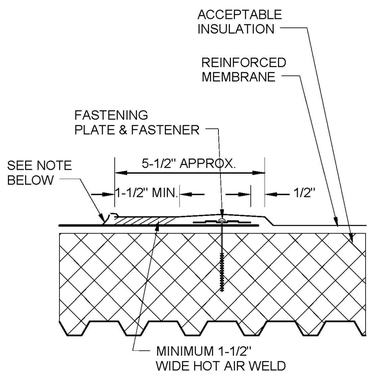

NOTE:
APPROXIMATELY 1/8" DIAMETER BEAD OF CUT-EDGE SEALANT IS REQUIRED ON CUT EDGES OF REINFORCED MEMBRANE

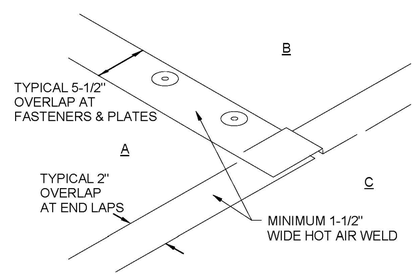

NOTE:
POSITION SHEETS AND HOT AIR WELD THE .060 INCH THICK
MEMBRANE A MINIMUM OF 1-1/2 INCHES.

MEMBRANE SPLICE

SCALE: 12" = 1'-0" (4 / A4.0 A11.0)

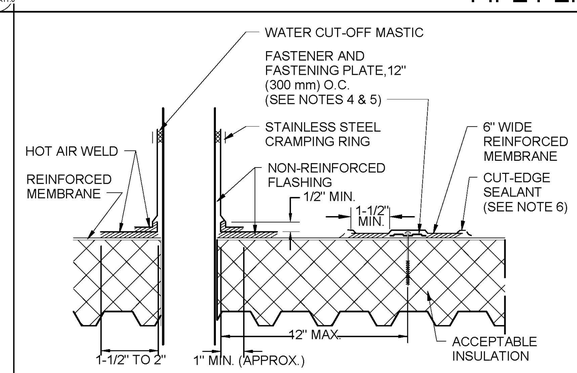

APPLY HEAT TO FLASHING AND FORM BY HAND PRIOR TO HOT AIR WELDING

NOTES:

1. REMOVE ALL LEAD AND OTHER FLASHING BEFORE INSTALLING FIELD FABRICATED PIPE SEAL.
2. TEMPERATURE OF PIPE MUST NOT EXCEED 120° F
3. NON-REINFORCED MEMBRANE WRAPPED AROUND PIPE SHALL HAVE MINIMUM 1-1/2" VERTICAL HOT AIR WELD.
4. INSTALL A MINIMUM OF 4 FASTENING PLATES AROUND PIPES WITH A DIAMETER UP TO 6". ADDITIONAL FASTENING PLATES WILL BE REQUIRED FOR PIPES GREATER THAN 6" IN DIAMETER AND SHALL BE SPACED 12" ON CENTER MAXIMUM.
5. REFER TO MANUFACTURER SPECIFICATIONS FOR PROPER FASTENERS AND PLATES.
6. APPROXIMATELY 1/8" DIAMETER BEAD OF CUT-EDGE SEALANT IS REQUIRED ON CUT EDGES OF REINFORCED MEMBRANE.

FIELD FABRICATION PENETRATION

SCALE: 12" = 1'-0" (2 / A4.0 A11.0)

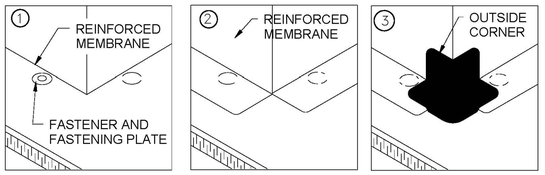

NOTES:

1. BEGIN INSTALLATION OF FASTENING PLATES APPROXIMATELY 6" FROM CORNER.
2. POSITION FASTENING PLATES 1/2" TO 1" FROM EDGE OF DECK MEMBRANE.
3. APPROXIMATELY 1/8" DIAMETER BEAD OF CUT-EDGE SEALANT IS REQUIRED ON CUT EDGES OF REINFORCED MEMBRANE.
4. REFER TO MANUFACTURER SPECIFICATIONS FOR ACCEPTABLE FASTENERS AND PLATES.

OUTSIDE CORNER

SCALE: 12" = 1'-0" (7 / A11.0)

LICENSED ARCHITECT J. BRUCE CAMINO C23740 Signature 10/31/11 Renewal Date STATE OF CALIFORNIA

DEVELOPMENT ONE, INC.
1611 East Fourth Street, Suite 250
Santa Ana, California 92701
J. Bruce Camino, Architect, AIA, NCARB
(714) 689-0298
(714) 648-0197 FAX

DATE	SYM	REVISION	BY	A'PD

NATIONAL AERONAUTICS AND SPACE ADMINISTRATION
DRYDEN FLIGHT RESEARCH CENTER
EDWARDS, CA

DRAWING TITLE
ROOF DETAILS

PROJECT TITLE 8-18-11
FACILITIES SUPPORT CENTER
100% FINAL DESIGN SUBMITTAL

APPROVALS		DATE
Chief, Facilities Engineering & Asset Mgmt. Office DAN CROWLEY		8-18-11
Project Requestor /Customer DAN CROWLEY		8-18-11
Facilities Project Manager GEMMA FLORES		8-18-11
Chief, Office of Protective Services JOHN ZELLMER		8-18-11
Chief - Safety, Health, and Environmental Office DAN MULLEN		8-18-11
DFRC Chief Information Officer KEN NORLIN		8-18-11

DATE STRTD	11/10/10	DATE PRNTD	05/23/11
DRAWN BY		TRADE SH. No.	EDM-1703
SCALE	AS NOTED		
FILE NAME	A11.0	SHEET No. 80 of 196	