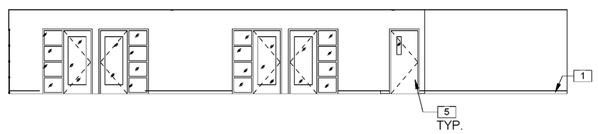

INTERIOR ELEVATION SUITE 160 - EAST

SCALE: 1/8" = 1'-0" (5 / A2.2 / A8.3)

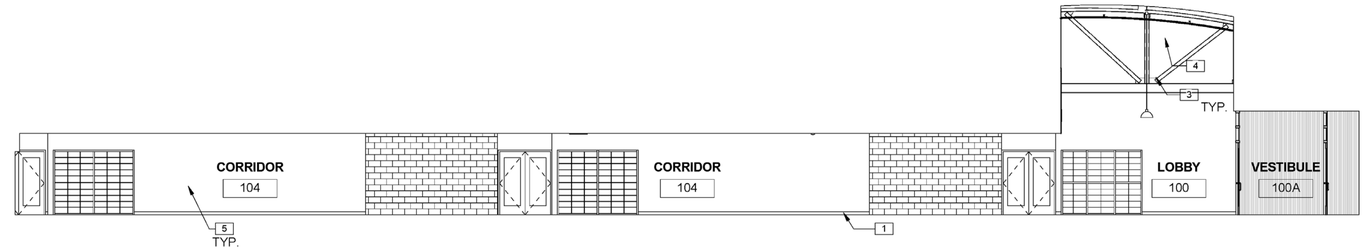

CORRIDOR INTERIOR ELEVATION - NORTH

SCALE: 1/8" = 1'-0" (1 / A2.1 / A8.3)

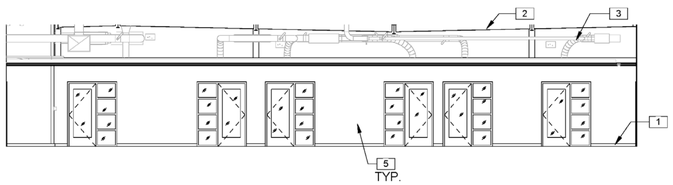

INTERIOR ELEVATION SUITE 140 - WEST

SCALE: 1/8" = 1'-0" (4 / A2.1 / A8.3)

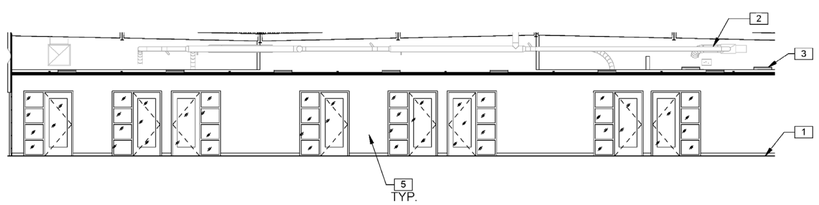

INTERIOR ELEVATION SUITE 120 - WEST

SCALE: 1/8" = 1'-0" (3 / A2.1 / A8.3)

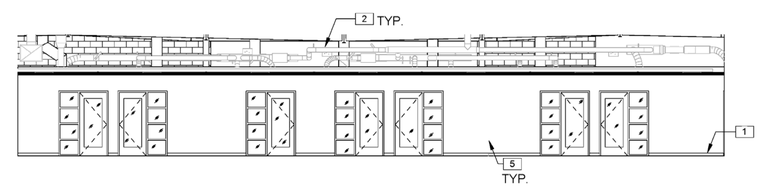

INTERIOR ELEVATION OFFICE SUITE 130 - WEST

SCALE: 1/8" = 1'-0" (2 / A2.3 / A8.3)

INTERIOR ELEVATION KEYNOTES:

1. 4" RUBBER BASE SEE FINISH SCHEDULE
2. MECHANICAL DUCT PER MECHANICAL PLANS
3. LIGHTING FIXTURES, SEE REFLECTED CEILING PLAN AND ELECTRICAL PLANS
4. STRUCTURAL MEMBER, SEE STRUCTURAL PLANS
5. PAINTED GWB WALL PER PLAN

LICENSED ARCHITECT J. BRUCE CAMINO C23740 Signature 10/31/11 RenewalDate STATE OF CALIFORNIA

DEVELOPMENT ONE, INC.
1611 East Fourth Street, Suite 250
Santa Ana, California 92701
J. Bruce Camino, Architect, AIA, NCARB
(714) 689-0298
(714) 648-0197 FAX

DATE	SYM	REVISION	BY	A'PD

NATIONAL AERONAUTICS AND SPACE ADMINISTRATION

DRYDEN FLIGHT RESEARCH CENTER
EDWARDS, CA

DRAWING TITLE

INTERIOR ELEVATIONS

PROJECT TITLE

8-18-11

FACILITIES SUPPORT CENTER
100% FINAL DESIGN SUBMITTAL

APPROVALS	DATE
Chief, Facilities Engineering & Asset Mgmt. Office DAN CROWLEY	8-18-11
Project Requestor /Customer DAN CROWLEY	8-18-11
Facilities Project Manager GEMMA FLORES	8-18-11
Chief, Office of Protective Services JOHN ZELLMER	8-18-11
Chief - Safety, Health, and Environmental Office DAN MULLEN	8-18-11
DFRC Chief Information Officer KEN NORLIN	8-18-11

DATE STRTD	11/23/10	DATE PRINTD	05/23/11
DRAWN BY		EDM-1703	
SCALE	AS NOTED	TRADE SH. No.	
FILE NAME		A8.3	SHEET No. 71 of 196

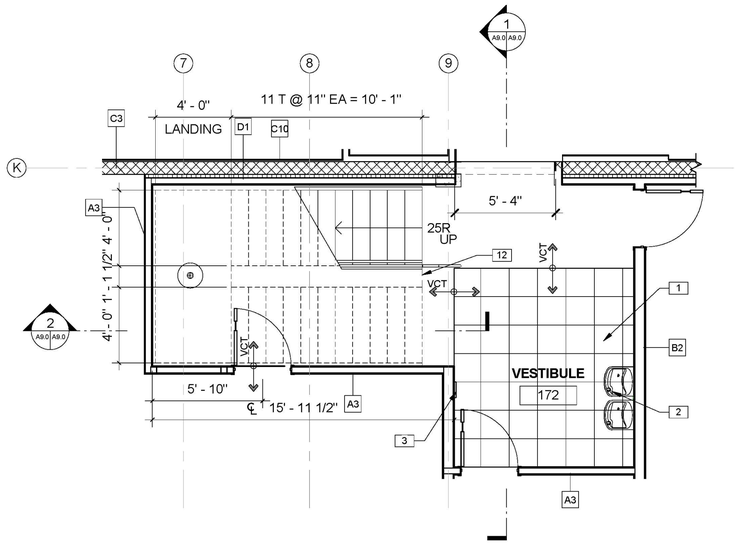

ENLARGED PLAN STAIR 177

SCALE: 1/4" = 1'-0" (3 / A2.4 A9.0)

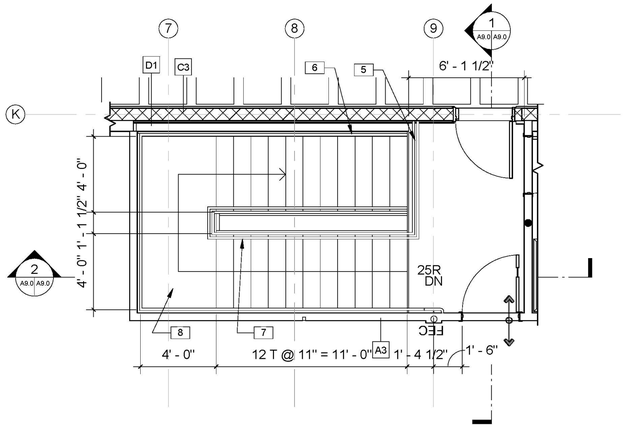

ENLARGED STAIR #1 AT MEZZANINE

SCALE: 1/4" = 1'-0" (4 / A2.5 A9.0)

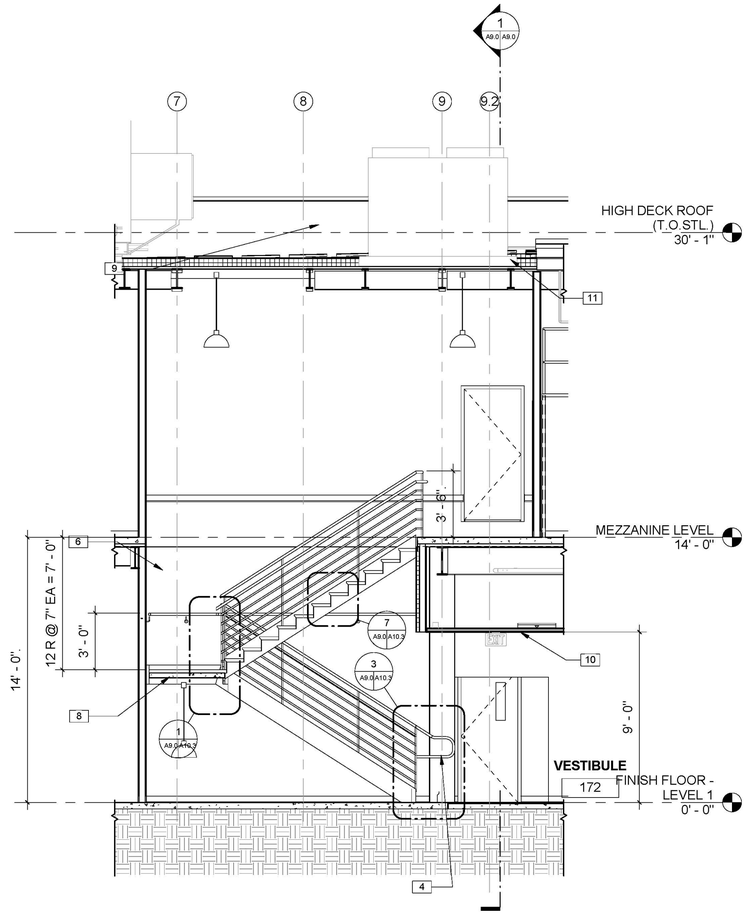

STAIR #1 AT MEZZANINE

SCA 8-18-11

1/4" = 1'-0" (2 / A9.0 A9.0)

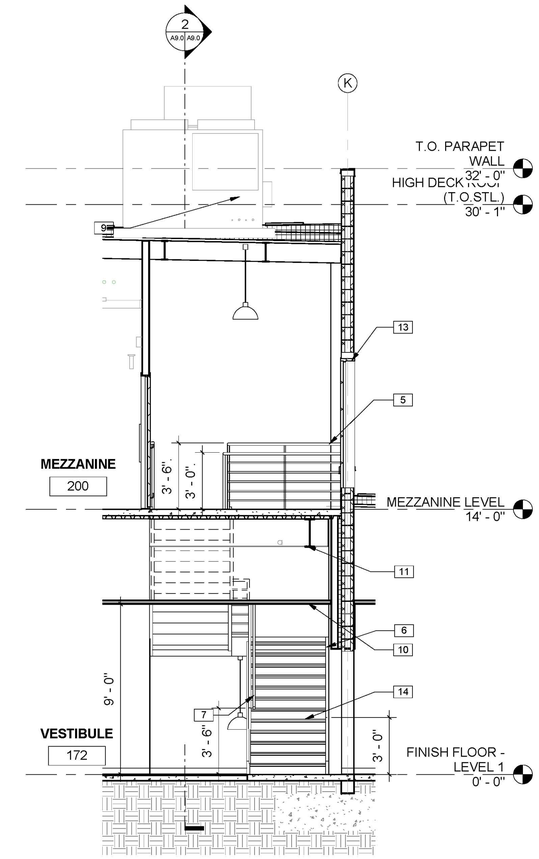

STAIR #1

SCALE: 1/4" = 1'-0" (1 / A9.0 A9.0)

KEYNOTES:

1. ENTRY GRID SYSTEM - 18"X18"X3/4" REMOVABLE MODULAR S.S. OPEN GRID TILES IN RECESSED SLAB FLUSH WITH FLOOR FINISH, SEE SLAB PLAN FOR DIMENSIONS
2. ACCESSIBLE DRINKING FOUNTAIN
3. STAIR SIGNAGE - SEE DETAIL 7/A10.7
4. HANDRAIL & GUARDRAIL TO EXTEND 1' - 11" BEYOND FACE OF LOWEST TREAD OF TREAD
5. 42" HIGH METAL GUARDRAILL, SEE DETAIL 4/A10.8
6. 3' - 0" HIGH WALL MOUNTED PAINTED STEEL HANDRAIL, SEE DETAIL 11/A10.7
7. STAIR - MOUNTED PAINTED STEEL 3' - 0" HIGH HANDRAIL
8. CONCRETE FILLED LANDING
9. LED PENDANT LIGHT FIXTURE
10. SUSPENDED CEILING PER PLAN
11. PAINTED STEEL TRUSS - SEE STRUCTURAL DRAWINGS
12. LINE OF FLOOR ABOVE
13. BURNISHED 8" CMU WALL
14. STAIR NOSING, SEE DETAIL 6/A10.7

LEGEND

X —— WALL TYPE, SEE SHEET A6.6 & A6.7

FLOOR TRANSITION, SEE SHEET FOR FINISH SCHEDULE

LICENSED ARCHITECT
J. BRUCE CAMINO
C23740
Signature
10/31/11
RenewalDate
STATE OF CALIFORNIA

DEVELOPMENT ONE, INC.
1611 East Fourth Street, Suite 250
Santa Ana, California 92701
J. Bruce Camino, Architect, AIA, NCARB
(714) 689-0298
(714) 648-0197 FAX

DATE	SYM	REVISION	BY	A'PD

NATIONAL AERONAUTICS AND SPACE ADMINISTRATION

DRYDEN FLIGHT RESEARCH CENTER
EDWARDS, CA

DRAWING TITLE

ENLARGED STAIR #1 PLAN AND SECTION

PROJECT TITLE

8-18-11

FACILITIES SUPPORT CENTER
100% FINAL DESIGN SUBMITTAL

APPROVALS	DATE
Chief, Facilities Engineering Division, HQ Office **DAN CROWLEY**	8-18-11
Project Requestor /Customer **DAN CROWLEY**	8-18-11
Facilities Project Manager **GEMMA FLORES**	8-18-11
Chief, Office of Protective Services **JOHN ZELLMER**	8-18-11
Chief - Safety, Health, and Environmental Office **DAN MULLEN**	8-18-11
DFRC Chief Information Officer **KEN NORLIN**	8-18-11

DATE STRTD	11/08/10	DATE PRNTD	05/23/11
DRAWN BY			EDM-1703
SCALE	AS NOTED	TRADE SH. No.	
FILE NAME		A9.0	SHEET No. 72 of 195

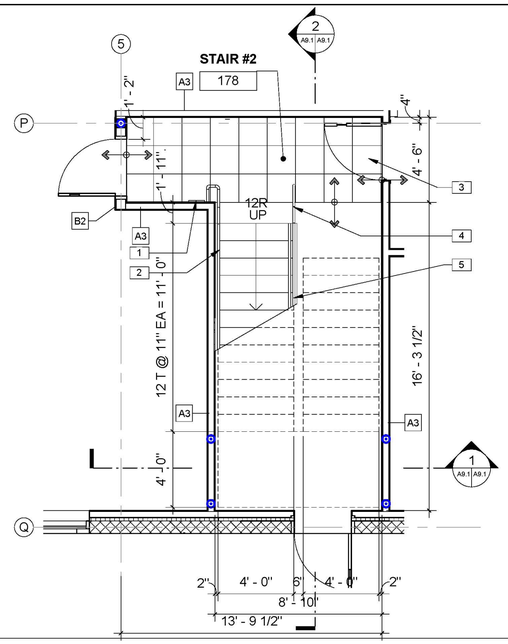

ENLARGED PLAN STAIR 204

SCALE: 1/4" = 1'-0" (3 / A2.4 A9.1)

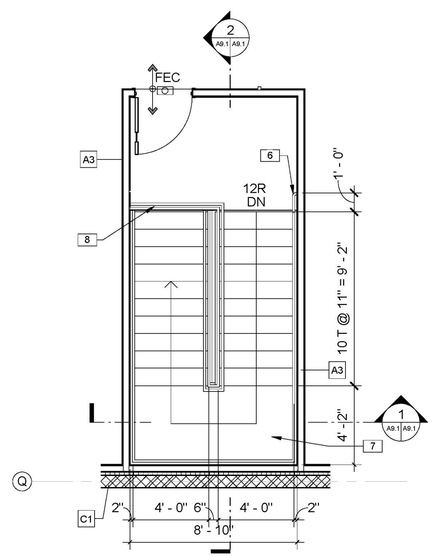

ENLARGED STAIR #2 AT MEZZANINE

SCALE: 1/4" = 1'-0" (4 / A2.5 A9.1)

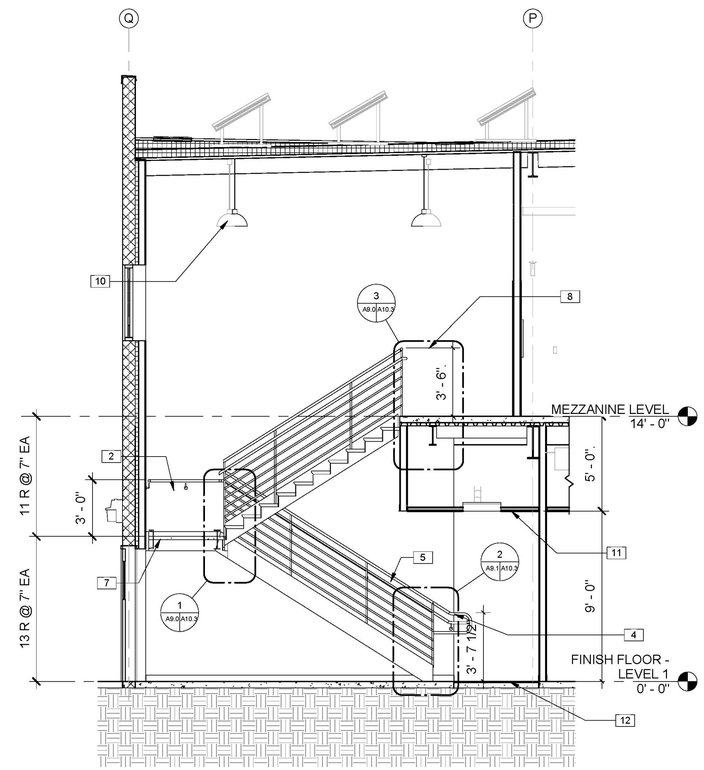

ENLARGED STAIR #2 SECTION

SCALE: 1/4" = 1'-0" (2 / A9.1)

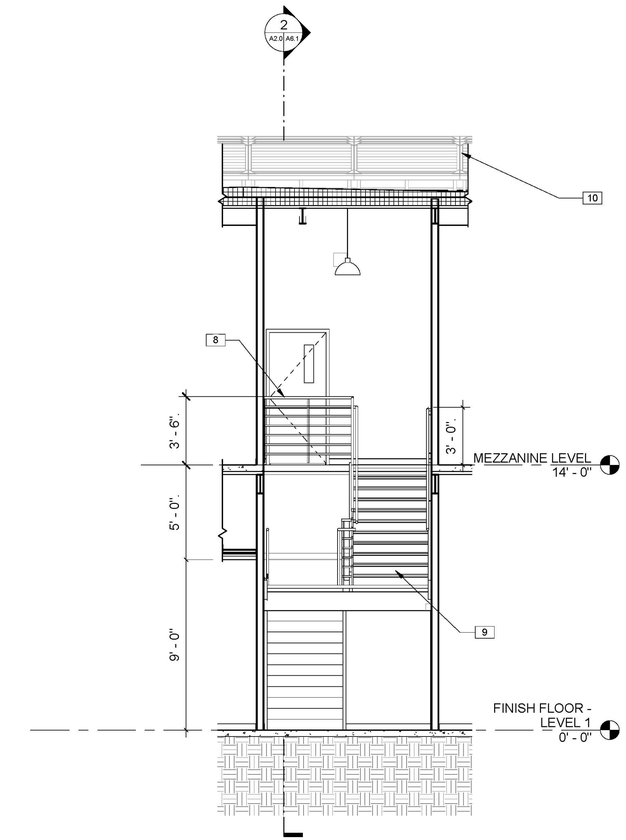

8-18-11

STAIR #2 AT MEZZANINE

SCALE: 1/4" = 1'-0" (1 / A9.1)

KEYNOTES:

1. STAIR SIGNAGE - SEE DETAIL 7/A10.7
2. 3' - 0" HIGH WALL MOUNTED PAINTED STEEL HANDRAIL, SEE DETAIL 11/A10.7
3. ENTRY GRID SYSTEM - 18"X18"X3/4" REMOVABLE MODULAR S.S. OPEN GRID TILES IN RECESSED SLAB FLUSH WITH FLOOR FINISH, SEE SLAB PLAN FOR DIMENSIONS
4. HANDRAIL & GUARDRAIL TO EXTEND 1' - 11" BEYOND FACE OF LOWEST TREAD OF TREAD
5. STAIR - MOUNTED PAINTED STEEL 3' - 6" HIGH GUARDRAIL
6. HANDRAIL TO EXTEND 12" BEYOND FACE OF TREAD
7. CONCRETE FILLED LANDING
8. 42" HIGH METAL GUARDRAILL, SEE DETAIL 4/A10.8
9. STAIR NOSING, SEE DETAIL 6/A10.7
10. LED PENDANT LIGHT FIXTURE
11. SUSPENDED CEILING PER PLAN
12. 3/4" ENTRY MAT SLAB DEPRESSION

LEGEND

X —— WALL TYPE, SEE SHEET A6.6 & A6.7

FLOOR TRANSITION, SEE SHEET FOR FINISH SCHEDULE

LICENSED ARCHITECT
JOHN BRUCE CAMINO
C23740
Signature
10/31/11
Renewal Date
STATE OF CALIFORNIA

DEVELOPMENT ONE, INC.
1611 East Fourth Street, Suite 250
Santa Ana, California 92701
J. Bruce Camino, Architect, AIA, NCARB
(714) 889-0298
(714) 648-0197 FAX

DATE	SYM	REVISION	BY	A'PD

NATIONAL AERONAUTICS AND SPACE ADMINISTRATION

DRYDEN FLIGHT RESEARCH CENTER
EDWARDS, CA

DRAWING TITLE

ENLARGED STAIR #2 PLAN AND SECTION

PROJECT TITLE 8-18-11

FACILITIES SUPPORT CENTER
100% FINAL DESIGN SUBMITTAL

APPROVALS	DATE
Chief, Facilities Engineering & Asset Mgmt. Office DAN CROWLEY	8-18-11
Project Requestor /Customer DAN CROWLEY	8-18-11
Facilities Project Manager GEMMA FLORES	8-18-11
Chief, Office of Protective Services JOHN ZELLMER	8-18-11
Chief - Safety, Health, and Environmental Office DAN MULLEN	8-18-11
DFRC Chief Information Officer KEN NORLIN	8-18-11

DATE STRTD	11/08/10	DATE PRNTD	05/23/11
DRAWN BY		EDM-1703	
SCALE	AS NOTED	TRADE SH. No.	
FILE NAME		A9.1	SHEET No. 73 of 196

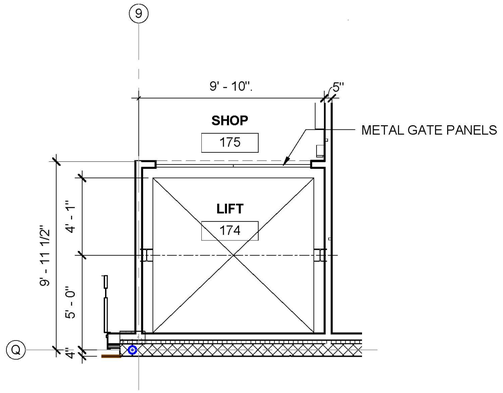

ENLARGED LIFT PLAN

SCALE: 1/4" = 1'-0" | 2 | A2.4 | A9.2

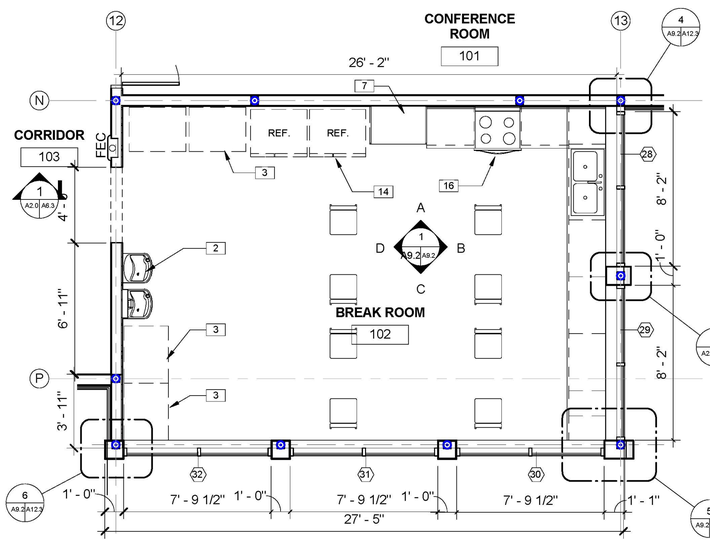

ENLARGED BREAK ROOM PLAN

SCALE: 1/4" = 1'-0" | 3 | A2.4 | A9.2

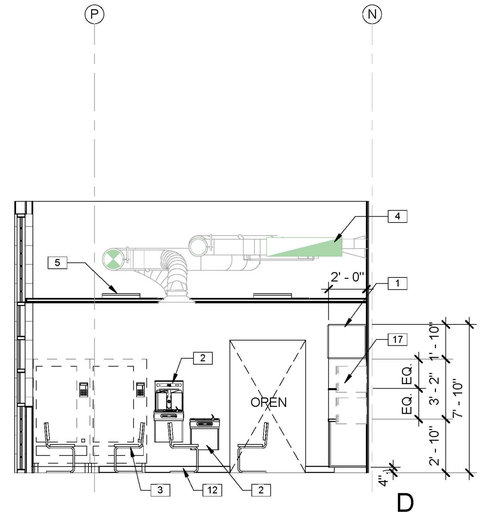

D

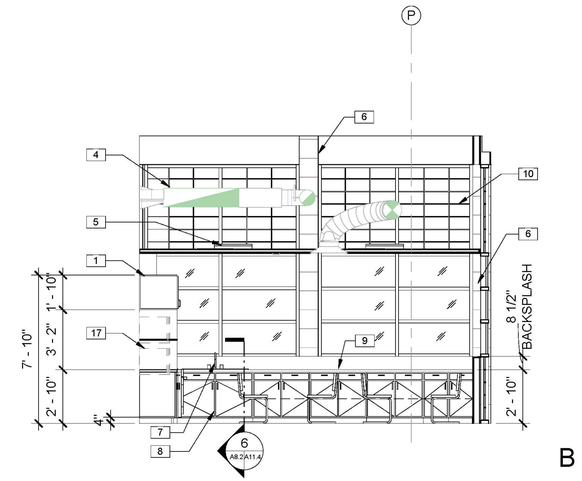

B

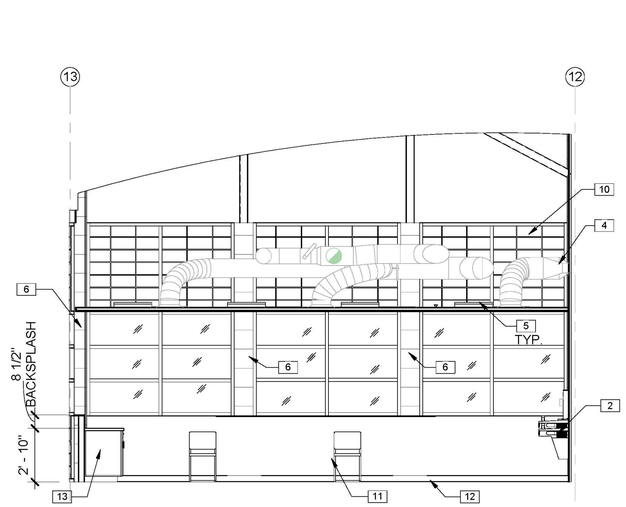

C

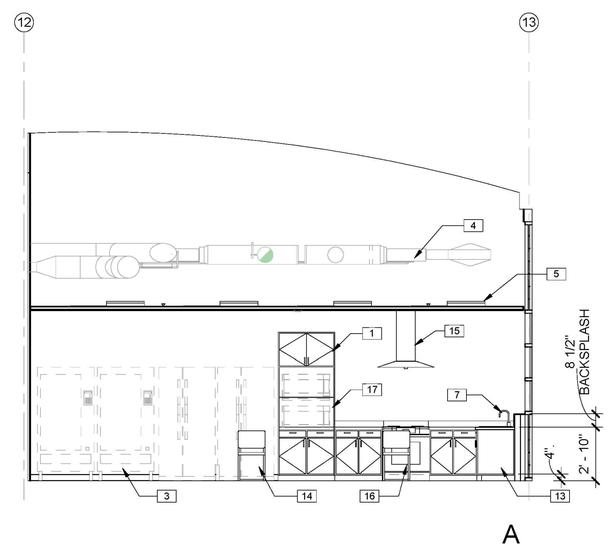

A

BREAK ROOM INTERIOR ELEVATIONS

SCALE: 1/4" = 1'-0" | 1 | A9.2 | A9.2

INTERIOR ELEVATION KEYNOTES:

1 WALL HUNG CABINET, FINISH SURFACE PER SCHEDULE, SEE DETAIL 3/A11.4
2 DRINKING FOUNTAIN, ADA-COMPLIANT
3 VENDING MACHINE PROVIDED BY OWNER (N.I.C.)
4 MECHANICAL DUCT PER MECHANICAL PLANS
5 LIGHTING FIXTURES, SEE REFLECTED CEILING PLAN AND ELECTRICAL PLANS
6 10-GA. FINISH METAL ENCLOSURE, SEE DETAILS ON SHEET A12.2
7 COUNTERTOP SINK, SEE PLUMBING PLANS
8 ACCESSIBLE BASE CABINET, FINISH SURFACE PER FINISH SCHEDULE, SEE DETAILS 1/A11.4 & 6/A11.4
9 COUNTERTOP FINISH SURFACE PER FINISH SCHEDULE
10 WINDOW SYSTEM BEYOND
11 PAINTED GYP. BOARD WALL PER PLAN
12 4" RUBBER BASE SEE FINISH SCHEDULE
13 BASE CABINET, SEE DETAIL 3/A11.4
14 REFRIGERATOR PROVIDED BY OWNER (N.I.C.)
15 STAINLESS STEEL RANGE HOOD - 200 CFM, SEE MECHANICAL PLANS
16 STAINLESS STEEL RANGE BY OWNER (N.I.C.)
17 BUILT-IN MICROWAVE PROVIDED BY OWNER (N.I.C.)

LICENSED ARCHITECT
J. BRUCE CAMINO
C23740
Signature
10/31/11
RenewalDate
STATE OF CALIFORNIA

DEVELOPMENT ONE, INC.
1611 East Fourth Street, Suite 250
Santa Ana, California 92701
J. Bruce Camino, Architect, AIA, NCARB
(714) 689-0298
(714) 648-0197 FAX

DATE	SYM	REVISION	BY	A'PD

NATIONAL AERONAUTICS AND SPACE ADMINISTRATION
DRYDEN FLIGHT RESEARCH CENTER
EDWARDS, CA

DRAWING TITLE
ENLARGED LIFT PLAN AND SECTION

PROJECT TITLE 8-18-11
FACILITIES SUPPORT CENTER
100% FINAL DESIGN SUBMITTAL

APPROVALS	DATE
Chief, Facilities Engineering & Assist Mgmt. Office DAN CROWLEY	8-18-11
Project Requestor /Customer DAN CROWLEY	8-18-11
Facilities Project Manager GEMMA FLORES	8-18-11
Chief, Office of Protective Services JOHN ZELLMER	8-18-11
Chief - Safety, Health, and Environmental Office DAN MULLEN	8-18-11
DFRC Chief Information Officer KEN NORLIN	8-18-11

DATE STRTD	11/08/10	DATE PRNTD	05/23/11
DRAWN BY		EDM-1703	
SCALE	AS NOTED	TRADE SH. No.	
FILE NAME		A9.2	SHEET No. 74 of 195

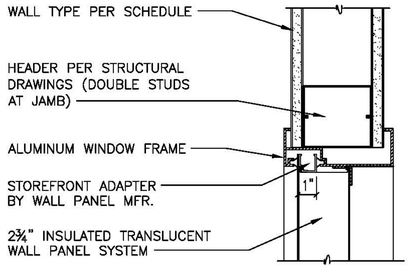

SIDELIGHT HEAD (JAMB SIM.)

SCALE: 3"=1'-0" | 11 A7.0 A10.1

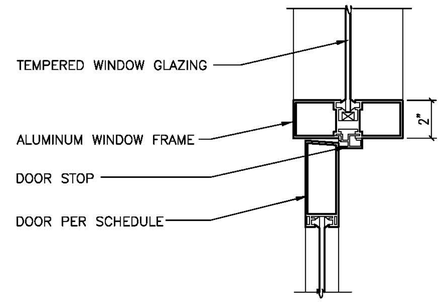

DOOR TO SIDELIGHT MULLION

SCALE: 3"=1'-0" | 7 A7.0 A10.1

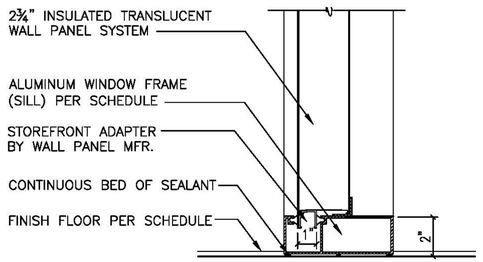

SIDELIGHT SILL

SCALE: 3"=1'-0" | 12 A7.0 A10.1

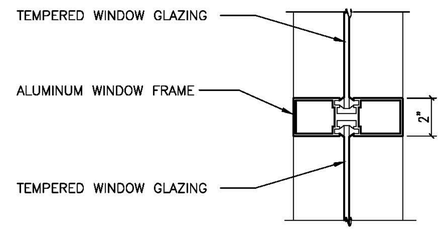

SIDELIGHT MULLION

SCALE: 3"=1'-0" | 8 A7.0 A10.1

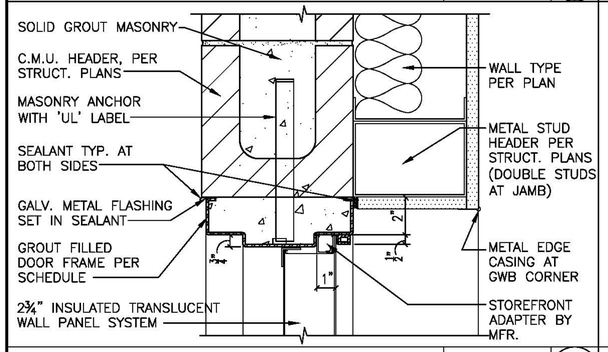

WINDOW HEAD (JAMB SIM.)

SCALE: 3"=1'-0" | 13 A7.0 A10.1

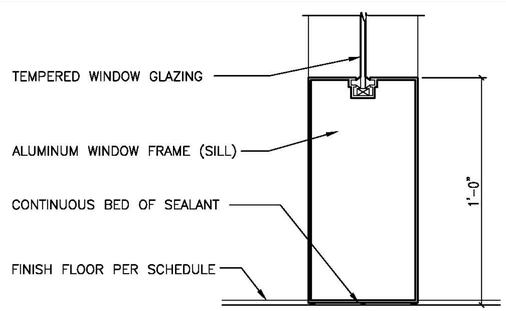

SIDELIGHT SILL

SCALE: 3"=1'-0" | 9 A7.0 A10.1

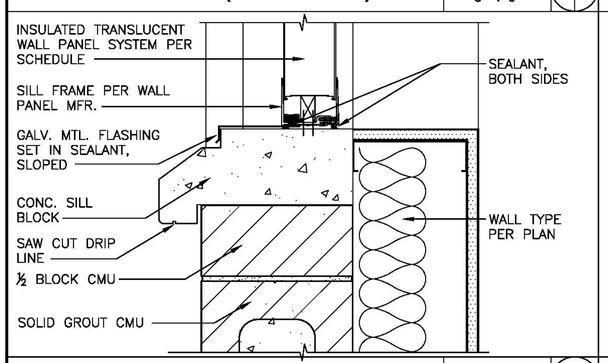

WINDOW SILL

SCALE: N.T.S. | 14 A7.0 A10.1

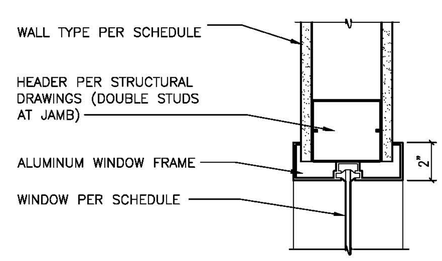

SIDELIGHT HEAD (JAMB SIM.)

SCALE: 3"=1'-0" | 10 A7.0 A10.1

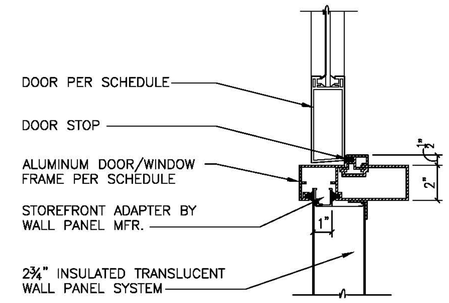

DOOR TO SIDELIGHT MULLION

SCALE: 3"=1'-0" | 4 A7.0 A10.1

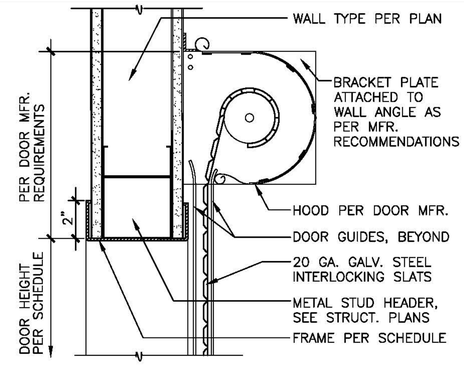

ROLL-UP DOOR HEAD

SCALE: 3"=1'-0" | 1 A7.0 A10.1

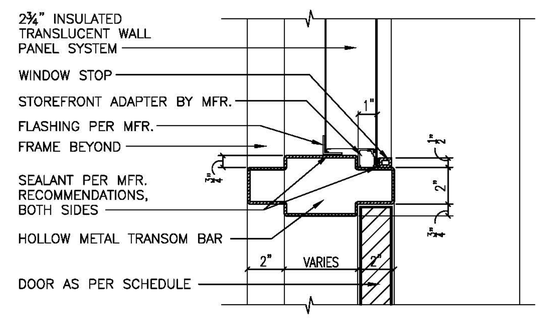

DOOR TO TRANSOM MULLION

SCALE: 1 1/2"=1'-0" | 5 A7.0 A10.1

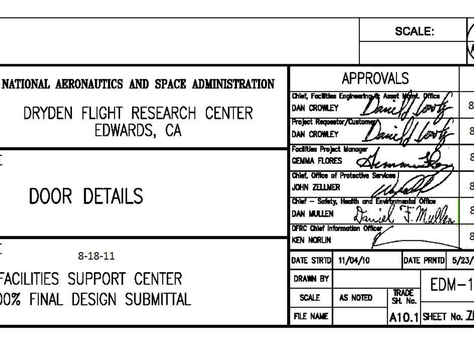

ROLL-UP DOOR JAMB

SCALE: 3"=1'-0" | 2 A7.0 A10.1

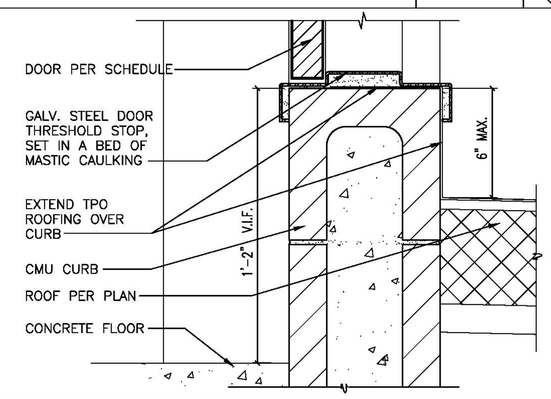

DOOR SILL AT CURB

SCALE: 1 1/2"=1'-0" | 6 A7.0 A10.1

SCALE: | 3 A7.0 A10.1

LICENSED ARCHITECT — JOHN BRUCE CAMINO — C23740 — Signature — 10/31/11 Renewal Date — STATE OF CALIFORNIA

DEVELOPMENT ONE, INC.
1611 East Fourth Street, Suite 250
Santa Ana, California 92701
J.Bruce Camino, Architect, AIA, NCARB
(714) 689-0298
(714) 648-0197 FAX

DATE	SYM	REVISION	BY	A'PD

NATIONAL AERONAUTICS AND SPACE ADMINISTRATION
DRYDEN FLIGHT RESEARCH CENTER
EDWARDS, CA

DRAWING TITLE
DOOR DETAILS

PROJECT TITLE
8-18-11
FACILITIES SUPPORT CENTER
100% FINAL DESIGN SUBMITTAL

APPROVALS	DATE
Chief, Facilities Engineering & Asset Mgmt. Office — DAN CROWLEY	8-18-11
Project Requestor/Customer — DAN CROWLEY	8-18-11
Facilities Project Manager — GEMMA FLORES	8-18-11
Chief, Office of Protective Services — JOHN ZELLMER	8-18-11
Chief – Safety, Health and Environmental Office — DAN MULLEN	8-18-11
DFRC Chief Information Officer — KEN MORLIN	8-18-11

DATE STRTD	11/04/10	DATE PRNTD	5/23/11
DRAWN BY		TRADE SH. No.	EDM–1703
SCALE	AS NOTED		
FILE NAME		A10.1	SHEET No. 76 of 195