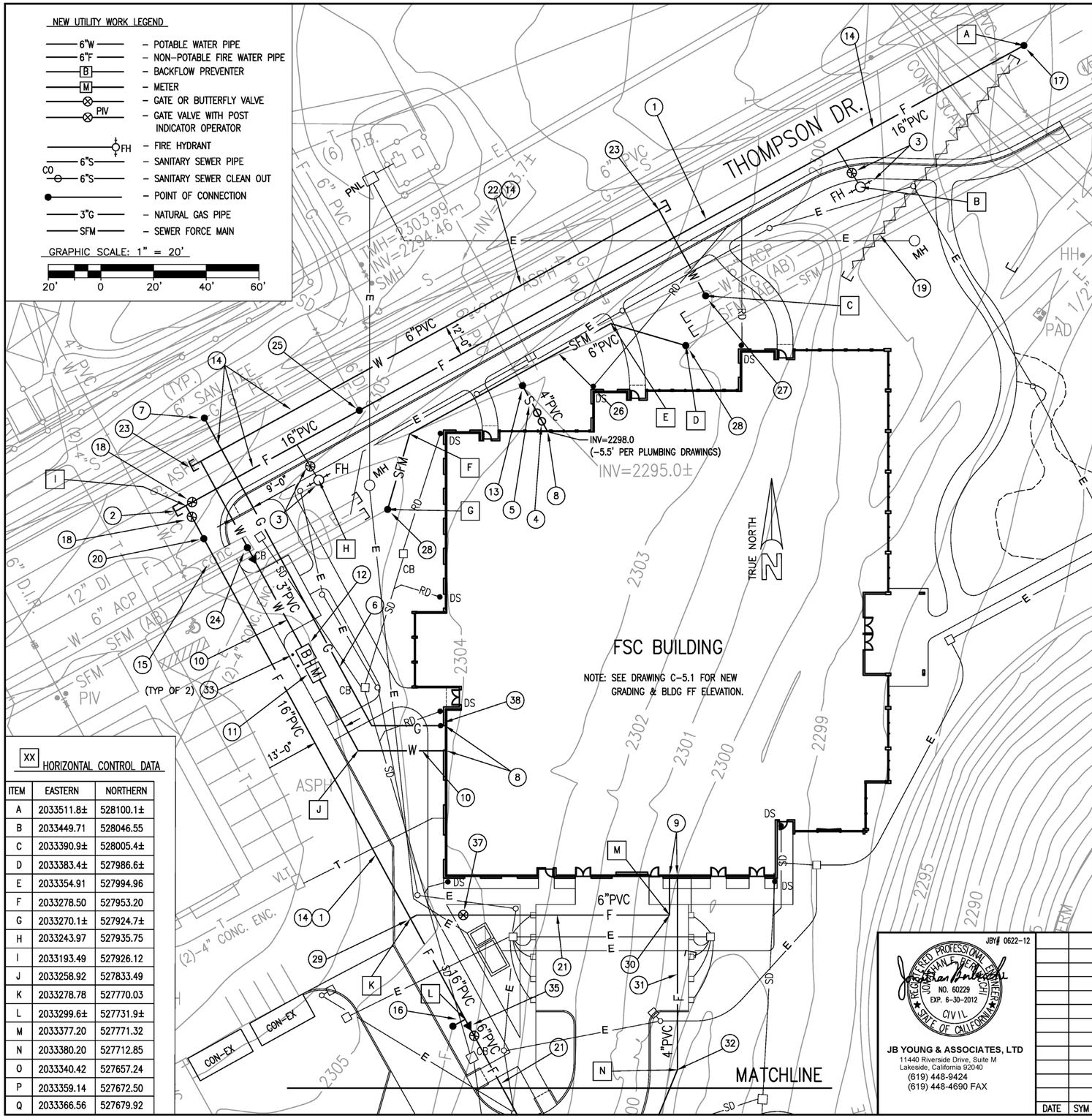

ITEM	EASTERN	NORTHERN
A	2033511.8±	528100.1±
B	2033449.71	528046.55
C	2033390.9±	528005.4±
D	2033383.4±	527986.6±
E	2033354.91	527994.96
F	2033278.50	527953.20
G	2033270.1±	527924.7±
H	2033243.97	527935.75
I	2033193.49	527926.12
J	2033258.92	527833.49
K	2033278.78	527770.03
L	2033299.6±	527731.9±
M	2033377.20	527771.32
N	2033380.20	527712.85
O	2033340.42	527657.24
P	2033359.14	527672.50
Q	2033366.56	527679.92

XX NOTES:

1) NEW FIRE WATER 16" FIRE WATER PIPE, SEE DETAIL 1 C-4.1 | C-8.3
C905 PVC, CLASS 200.
2) INSTALL 16"X16" DI TEE, 16" DI BLIND FLANGE, AND THRUST BLOCKS FOR FUTURE EXTENSION, SEE DETAIL 5 C-4.1 | C-8.3
3) NEW 16"x6" DI TEE, 6" GATE VALVE, 6" PVC PIPE, FIRE HYDRANT, & THRUST BLOCK, SEE DETAIL 5 C-4.1 | C-8.3 2 C-4.1 | C-8.4
4) INSTALL NEW 4" DOUBLE CLEANOUT, SEE DETAIL 1 C-4.1 | C-8.4
5) INSTALL NEW 4" PVC SEWER PIPE, SEE DETAIL 1 C-4.1 | C-8.3
6) NEW 1" PE NATURAL GAS PIPELINE, SEE DETAIL 1 C-4.1 | C-8.3
7) TAP EXISTING 6" PE GAS MAIN AS REQUIRED.
8) SEE PLUMBING DRAWINGS FOR CONTINUATION.
9) SEE FIRE SUPPRESSION DRAWINGS FOR CONTINUATION.
10) INSTALL 3" PVC WATER PIPE, SEE DETAIL 1 C-4.1 | C-8.3
11) INSTALL 2" WATER METER, SEE DETAIL 3 C-4.1 | C-8.3
12) INSTALL 3" RPBP AND STRAINER, SEE DETAIL 4 C-4.1 | C-8.3
13) CONNECT TO EXISTING 6" PVC SEWER PIPE WITH PVC PIPE REDUCER.
14) SAWCUT, REMOVE, DISPOSE, AND REPLACE ASPHALT PAVEMENT, AS REQUIRED, SEE DETAIL 6 C-4.1 | C-8.1
15) SAWCUT, REMOVE, DISPOSE AND REPLACE 6" THICK CONC SWALE, AS REQUIRED. MATCH EXISTING.
16) CONNECT TO EXISTING 16" DI PIPE WITH 16"x16" DI TEE, 45° BEND, ADAPTER COUPLING, & THRUST BLOCKS, SEE DETAIL 5 C-4.1 | C-8.3
17) CONNECT TO EXISTING 16" DI PIPE W/ 22.5° BEND, ADAPTER COUPLING, & THRUST BLOCK, SEE DETAIL 5 C-4.1 | C-8.3
18) INSTALL NEW 16" BFV, SEE DETAIL 2 C-4.1 | C-8.3
19) ABANDON EXST U/G UTILITY PIPE IN PLACE.
20) INSTALL NEW 16" X 12" DI TEE (RJ), 12" ADAPTER COUPLING, AND THRUST BLOCK. CONNECT TO EXISTING. SEE DETAIL 5 C-4.1 | C-8.3
21) NEW 6" PVC FIRE WATER PIPE, SEE DETAIL 1 C-4.1 | C-8.3
C900 PVC, CLASS 200.
22) NEW 6" PVC POTABLE WATER MAIN PIPE, SEE DETAIL 1 C-4.1 | C-8.3
23) INSTALL NEW 6" DI TEE (RJ) AND BLIND FLANGE FOR FUTURE WATER LINE EXTENSION.
24) INSTALL NEW 6" DI TEE, THRUST BLOCK, 6"X3" DI REDUCER & ADAPTER COUPLING. CONNECT TO EXISTING. SEE DETAIL 5 C-4.1 | C-8.3
25) INSTALL NEW 16" X 6" DI TEE, 6" ADAPTER COUPLING, AND THRUST BLOCK. CONNECT TO EXISTING. SEE DETAIL 5 C-4.1 | C-8.3
26) INSTALL NEW 6" PVC SEWER FORCE MAIN PIPE. SEE DETAIL 1 C-4.1 | C-8.3
FINAL SFM CONNECTIONS SHALL BE MADE DURING THE WEEKEND AND SHALL BE COMPLETED WITHIN 4 HOURS. INSTALL TEMPORARY SHUNT LINE DURING DURING FINAL CONNECTIONS PROCESS.
27) INSTALL NEW 6" 90° DI BEND AND THRUST BLOCK. CONNECT TO EXISTING. SEE DETAIL 5 C-4.1 | C-8.3
28) INSTALL NEW 6" PVC 45° BEND & THRUST BLOCK (TYP OF 4). CONNECT TO EXST. SEE DETAIL 5 C-4.1 | C-8.3
29) NEW 16" X 6" DI TEE, 6" 45° BEND, & THRUST BLOCK, SEE DETAIL 5 C-4.1 | C-8.3
30) NEW 6" 45° DI BEND, RESTRAINED JOINT.
31) NEW 4" PVC FIRE WATER PIPE, SEE DETAIL 1 C-4.1 | C-8.3
C900 PVC, CLASS 200.
32) NEW 4" 22.5° DI BEND, RESTRAINED JOINT.
33) NEW 6" ø GUARD POST, SEE DETAIL 2 C-4.1 | C-8.2
34) NEW FIRE DEPARTMENT CONNECTION, SEE DETAIL 1 C-4.1 | C-8.8
INSTALL DRIP VALVE MANHOLE.
35) NEW 16"X6" DI REDUCER & 6" GATE VALVE, SEE DETAIL 2 C-4.1 | C-8.3
36) NEW FIRE HYDRANT, SEE DETAIL 2 C-4.1 | C-8.3
AND 6" GATE VALVE C-4.1 | C-8.4
37) NEW 6" GATE VALVE & PIV, SEE DETAIL 6 C-4.1 | C-8.3
38) NEW GAS METER AND REGULATOR, SEE PLUMBING DRAWINGS.

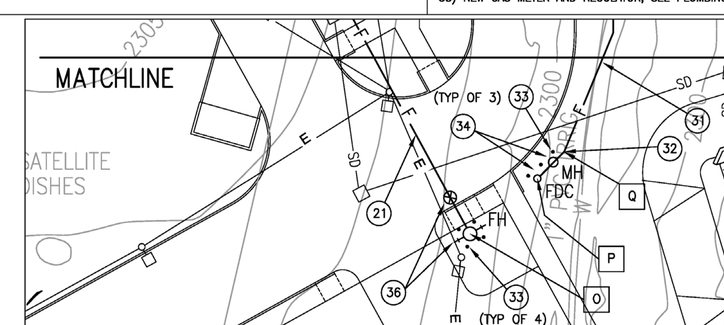

JBY# 0622-12

REGISTERED PROFESSIONAL ENGINEER JOSHUAN E. BERTHOLD NO. 60229 EXP. 6-30-2012 CIVIL STATE OF CALIFORNIA

JB YOUNG & ASSOCIATES, LTD
11440 Riverside Drive, Suite M
Lakeside, California 92040
(619) 448-9424
(619) 448-4690 FAX

DATE	SYM	REVISION	BY	A'PD

NATIONAL AERONAUTICS AND SPACE ADMINISTRATION
DRYDEN FLIGHT RESEARCH CENTER
EDWARDS, CA

DRAWING TITLE
UTILITY PLAN

PROJECT TITLE
8-18-11
FACILITIES SUPPORT CENTER
100% FINAL DESIGN SUBMITTAL

APPROVALS	DATE
Chief, Facilities Engineering & Asset Mgmt. Office DAN CROWLEY	8-18-11
Project Requestor/Customer DAN CROWLEY	8-18-11
Facilities Project Manager GEMMA FLORES	8-18-11
Chief, Office of Protective Services JOHN ZELLMER	8-18-11
Chief – Safety, Health and Environmental Office DAN MULLEN	8-18-11
DFRC Chief Information Officer KEN NORLIN	8-18-11

DATE STRTD	11/04/10	DATE PRNTD	06/23/11
DRAWN BY	JBY	EDM-1703	
SCALE	AS NOTED	TRADE SH. No. C-4.1	
FILE NAME		SHEET No. 11 of 195	

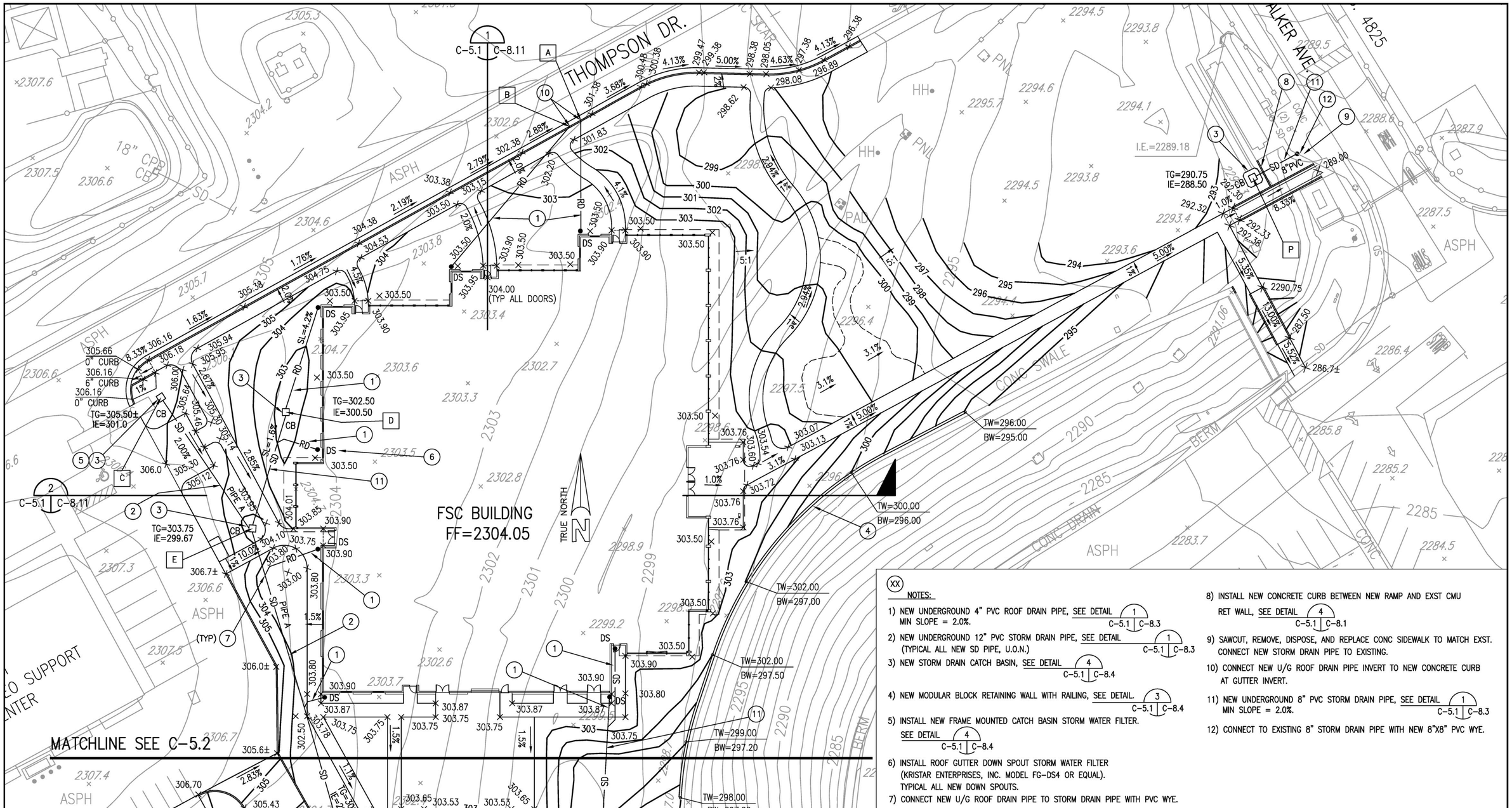

XX

NOTES:

1) NEW UNDERGROUND 4" PVC ROOF DRAIN PIPE, SEE DETAIL 1 C-5.1 C-8.3
MIN SLOPE = 2.0%.
2) NEW UNDERGROUND 12" PVC STORM DRAIN PIPE, SEE DETAIL 1 C-5.1 C-8.3
(TYPICAL ALL NEW SD PIPE, U.O.N.)
3) NEW STORM DRAIN CATCH BASIN, SEE DETAIL 4 C-5.1 C-8.4
4) NEW MODULAR BLOCK RETAINING WALL WITH RAILING, SEE DETAIL. 3 C-5.1 C-8.4
5) INSTALL NEW FRAME MOUNTED CATCH BASIN STORM WATER FILTER.
SEE DETAIL 4 C-5.1 C-8.4
6) INSTALL ROOF GUTTER DOWN SPOUT STORM WATER FILTER
(KRISTAR ENTERPRISES, INC. MODEL FG-DS4 OR EQUAL).
TYPICAL ALL NEW DOWN SPOUTS.
7) CONNECT NEW U/G ROOF DRAIN PIPE TO STORM DRAIN PIPE WITH PVC WYE.
8) INSTALL NEW CONCRETE CURB BETWEEN NEW RAMP AND EXST CMU
RET WALL, SEE DETAIL 4 C-5.1 C-8.1
9) SAWCUT, REMOVE, DISPOSE, AND REPLACE CONC SIDEWALK TO MATCH EXST.
CONNECT NEW STORM DRAIN PIPE TO EXISTING.
10) CONNECT NEW U/G ROOF DRAIN PIPE INVERT TO NEW CONCRETE CURB
AT GUTTER INVERT.
11) NEW UNDERGROUND 8" PVC STORM DRAIN PIPE, SEE DETAIL 1 C-5.1 C-8.3
MIN SLOPE = 2.0%.
12) CONNECT TO EXISTING 8" STORM DRAIN PIPE WITH NEW 8"X8" PVC WYE.

GENERAL NOTES:

1) ADD 2000 FEET TO ALL NEW SPOT GRADE AND CONTOUR LABELS TO OBTAIN TRUE ELEVATIONS, U.O.N.
2) ALL SPOT GRADES ON CURBS ARE "TOP OF CURB" GRADES U.O.N.
3) SEE DRAWING C-8.8 FOR STORM DRAIN PIPE A PROFILE.

GRAPHIC SCALE: 1" = 20'

20' 0 20' 40' 60'

GRADING PLAN A

SCALE 1" = 20'

XX HORIZONTAL CONTROL DATA

SEE DRAWING C-5.2.

NEW WORK LEGEND:

X 301.28	– SPOT GRADE
RD	– U/G ROOF DRAIN PIPE.
SD HDWL	– STORM DRAIN PIPE AND CONC HEADWALL
CO	– STORM DRAIN CLEANOUT MANHOLE
2%	– FINISHED GRADE SLOPE
CB	– STORM DRAIN CATCH BASIN
TW 298.0 BW 297.0	– TOP OF WALL & BOTTOM OF WALL ELEV

JBY# 0622-12

REGISTERED PROFESSIONAL ENGINEER JOHNATHAN E. BERNICCHI NO. 60229 EXP. 6-30-2012 CIVIL STATE OF CALIFORNIA

JB YOUNG & ASSOCIATES, LTD
11440 Riverside Drive, Suite M
Lakeside, California 92040
(619) 448-9424
(619) 448-4690 FAX

DATE	SYM	REVISION	BY	A'PD

NATIONAL AERONAUTICS AND SPACE ADMINISTRATION
DRYDEN FLIGHT RESEARCH CENTER
EDWARDS, CA

DRAWING TITLE
GRADING PLAN A

PROJECT TITLE
8-18-11
FACILITIES SUPPORT CENTER
100% FINAL DESIGN SUBMITTAL

APPROVALS	DATE
Chief, Facilities Engineering & Asset Mgmt. Office DAN CROMLEY	8-18-11
Project Requestor/Customer DAN CROMLEY	8-18-11
Facilities Project Manager GEMMA FLORES	8-18-11
Chief, Office of Protective Services JOHN ZELLMER	8-18-11
Chief – Safety, Health and Environmental Office DAN MULLEN	8-18-11
DFRC Chief Information Officer KEN NORLIN	8-18-11

DATE STRTD	11/04/10	DATE PRNTD	05/23/11
DRAWN BY	JBY	EDM-1703	
SCALE	AS NOTED	TRADE SH. No. C-5.1	
FILE NAME		SHEET No. 12 of 195	

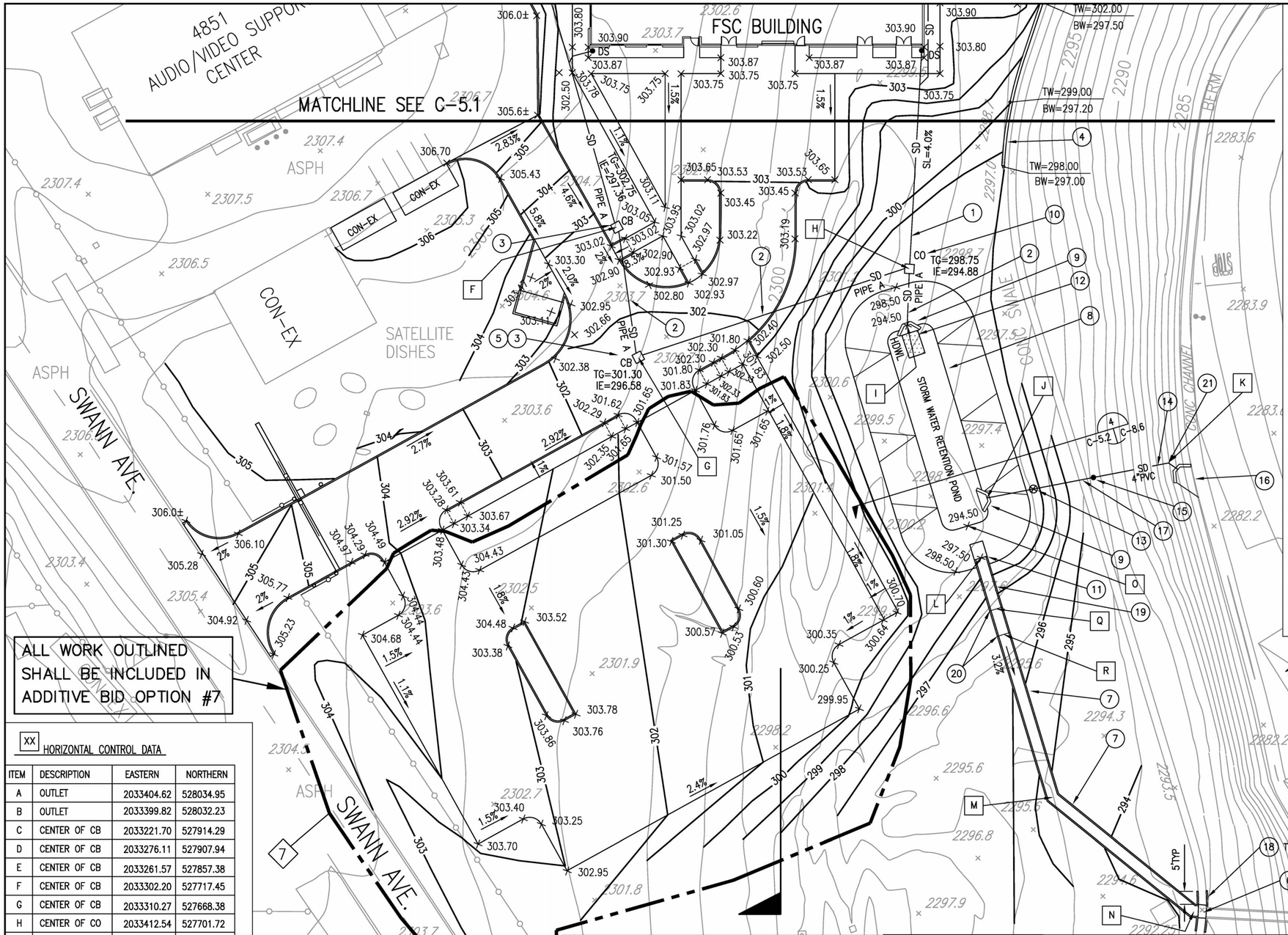

XX HORIZONTAL CONTROL DATA

ITEM	DESCRIPTION	EASTERN	NORTHERN
A	OUTLET	2033404.62	528034.95
B	OUTLET	2033399.82	528032.23
C	CENTER OF CB	2033221.70	527914.29
D	CENTER OF CB	2033276.11	527907.94
E	CENTER OF CB	2033261.57	527857.38
F	CENTER OF CB	2033302.20	527717.45
G	CENTER OF CB	2033310.27	527668.38
H	CENTER OF CO	2033412.54	527701.72
I	OUTLET CENTER	2033411.72	527680.43
J	INLET CENTER	2033441.80	527615.34
K	OUTLET CENTER	2033510.55	527628.90
L	CL OF SWALE	2033439.60	527592.78
M	CL OF SWALE	2033466.64	527502.54
N	CL OF SWALE	2033519.83	527459.55
O	CL OF POND	2033434.82	527603.84
P	CENTER OF CB	2033697.48	528009.90
Q	CL OF SWALE	2033445.22	527573.55
R	CL OF SWALE	2033448.11	527563.98

XX NOTES:

1) NEW UNDERGROUND 8" PVC STORM DRAIN PIPE, SEE DETAIL 1 C-5.2 C-8.3
2) NEW UNDERGROUND 15" PVC STORM DRAIN PIPE, SEE DETAIL 1 C-5.2 C-8.3
3) NEW STORM DRAIN CATCH BASIN, SEE DETAIL 4 C-5.2 C-8.4
4) NEW MODULAR BLOCK RETAINING WALL WITH RAILING, SEE DETAIL. 3 C-5.2 C-8.4
5) INSTALL NEW FRAME MOUNTED CATCH BASIN STORM WATER FILTER, SEE DETAIL 4 C-5.2 C-8.4
6) SAWCUT, REMOVE, DISPOSE, AND REPLACE 4" THICK SECTION OF EXST CONC SWALE. GRADE NEW SWALE TO DRAIN TOWARDS OUTLET.
7) NEW CONCRETE OVERFLOW SWALE W/ 6" CURBS, SEE DETAIL 3 C-5.2 C-8.6
8) NEW STORM WATER RETENTION POND, SEE DETAIL 4 C-5.2 C-8.6
9) NEW CONCRETE HEADWALL, SEE DETAIL 1 C-5.2 C-8.5
10) NEW STORM DRAIN CLEANOUT, SEE DETAIL 2 C-5.2 C-8.6
11) NEW POND OVERFLOW OUTLET, SEE DETAIL 7 C-5.2 C-8.6
12) INSTALL RIP RAP EROSION PROTECTION, SEE DETAIL 5 C-5.2 C-8.6
13) INSTALL NEW 4" BALL VALVE, SEE DETAIL 2 C-5.2 C-8.3
14) INSTALL NEW 4" PRESSURE RATED PVC DRAIN PIPE, SEE DETAIL 1 C-5.2 C-8.3
MINIMUM PIPE SLOPE = 2%. MINIMUM COVER = 14"
15) INSTALL NEW 4" PVC VERTICAL BEND AS REQUIRED.
16) CONNECT TO EXISTING CONCRETE SWALE, SEE DETAIL 6 C-5.2 C-8.6
INSTALL NEW CONC HEADWALL AND APRON TO EXST CONC SWALE.
17) SAWCUT, REMOVE, DISPOSE & REPLACE CONC BROW DITCH TO MATCH EXST.
18) INSTALL NEW CONCRETE CURB UP AGAINST EXST CONC SWALE, SEE DETAIL 4 C-5.2 C-8.1
19) NEW CONCRETE OVERFLOW SWALE W/ 12" CURBS, SEE DETAIL 3 C-5.2 C-8.6
20) TAPER SWALE CURB FROM 12" HIGH TO 6" HIGH
21) INSTALL NEW 4" 45° BEND.

TRUE NORTH

GRADING PLAN B

SCALE 1" = 20'

NEW WORK LEGEND:

SEE DRAWING C-5.1

GENERAL NOTES:

1) ADD 2000 FEET TO ALL NEW SPOT GRADE AND CONTOUR LABELS TO OBTAIN TRUE ELEVATIONS, U.O.N.
2) ALL SPOT GRADES ON CURBS ARE "TOP OF CURB" GRADES U.O.N.
3) SEE DRAWING C-8.8 FOR STORM DRAIN PIPE A PROFILE.

GRAPHIC SCALE: 1" = 20'

20' 0 20' 30' 60'

JBY# 0622-12

REGISTERED PROFESSIONAL ENGINEER JONATHAN BERNSTEIN NO. 60229 EXP. 6-30-2012 CIVIL STATE OF CALIFORNIA

JB YOUNG & ASSOCIATES, LTD
11440 Riverside Drive, Suite M
Lakeside, California 92040
(619) 448-9424
(619) 448-4690 FAX

DATE	SYM	REVISION	BY	A'PD

NATIONAL AERONAUTICS AND SPACE ADMINISTRATION
DRYDEN FLIGHT RESEARCH CENTER
EDWARDS, CA

DRAWING TITLE
GRADING PLAN B

PROJECT TITLE
8-18-11
FACILITIES SUPPORT CENTER
100% FINAL DESIGN SUBMITTAL

APPROVALS	DATE
Chief, Facilities Engineering & Asset Mgmt. Office DAN CROWLEY	8-18-11
Project Requestor/Customer DAN CROWLEY	8-18-11
Facilities Project Manager GEMMA FLORES	8-18-11
Chief, Office of Protective Services JOHN ZELLMER	8-18-11
Chief — Safety, Health and Environmental Office DAN MULLEN	8-18-11
DFRC Chief Information Officer KEN NORLIN	8-18-11

DATE STRTD	11/04/10	DATE PRNTD	05/23/11
DRAWN BY	JBY	EDM-1703	
SCALE	AS NOTED	TRADE SH. No. C-5.2	SHEET No. 13 of 195
FILE NAME			

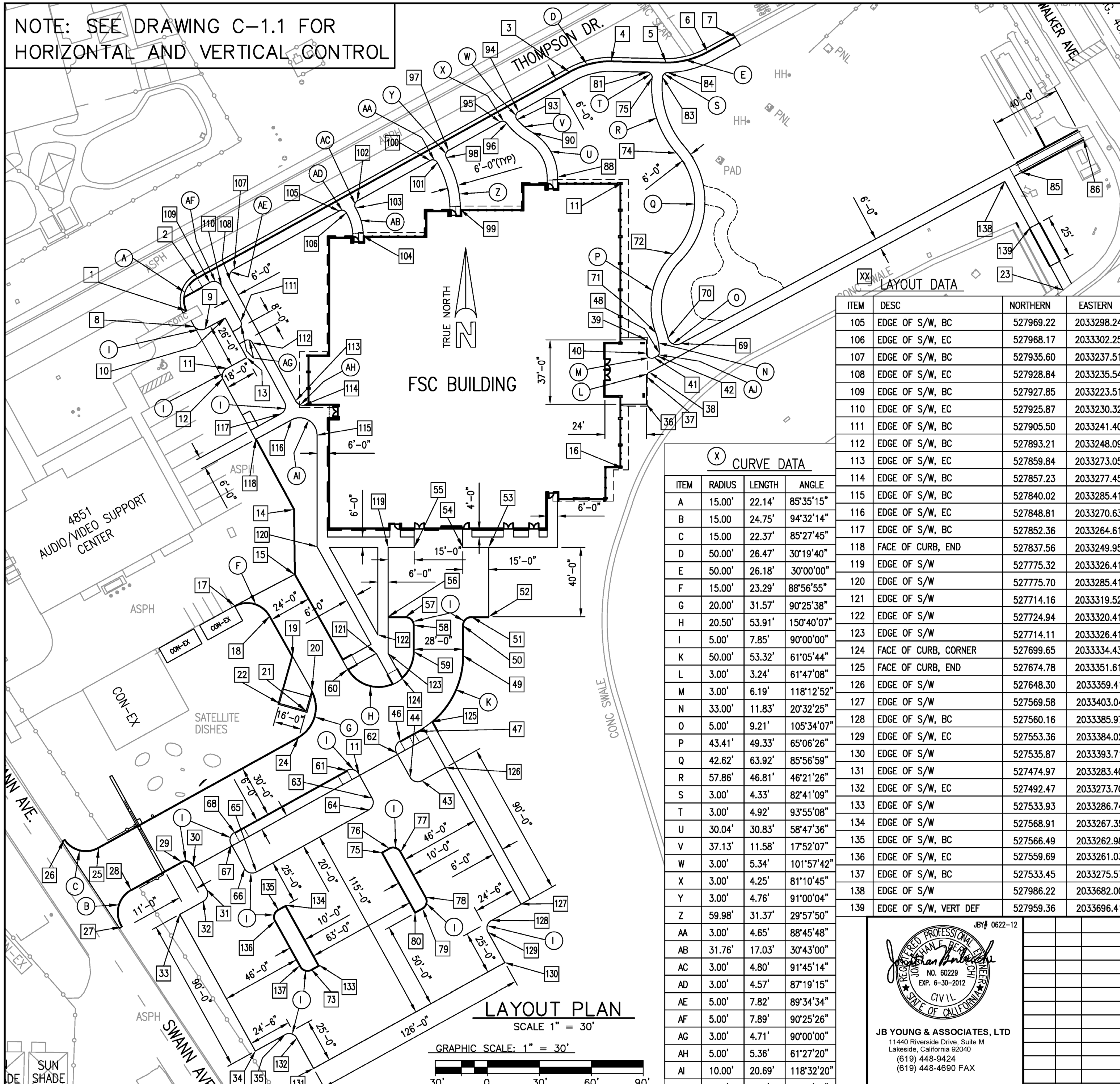

LAYOUT PLAN

SCALE 1" = 30'

GRAPHIC SCALE: 1" = 30'

30' 0 30' 60' 90'

ITEM	DESC	NORTHERN	EASTERN	ITEM	DESC	NORTHERN	EASTERN
53	FACE OF CURB, POB	527775.32	2033384.41	1	FACE OF CURB, BC	527911.34	2033209.87
54	S/W ANGLE POINT	527775.32	2033369.41	2	FACE OF CURB, EC	527930.70	2033216.25
55	FACE OF CURB, EC	527775.32	2033341.41	3	FACE OF CURB, BC	528049.45	2033430.82
56	FACE OF CURB, POB	527735.32	2033326.41	4	FACE OF CURB, EC	528055.69	2033456.22
57	FACE OF CURB, BC	527735.32	2033336.41	5	FACE OF CURB, BC	528054.99	2033485.41
58	FACE OF CURB, EC	527730.32	2033341.41	6	FACE OF CURB, EC	528061.09	2033510.56
59	FACE OF CURB, BC	527713.27	2033341.33	7	FACE OF CURB, END CURB	528069.68	2033526.28
60	FACE OF CURB, PCR	527705.02	2033303.04	8	FACE OF CURB, BC	527902.52	2033214.72
61	FACE OF CURB, CURVE POINT	527646.66	2033302.64	9	FACE OF CURB, EC	527901.25	2033221.01
62	FACE OF CURB, CURVE POINT	527644.70	2033309.43	10	FACE OF CURB, ANGLE POINT	527907.46	2033232.43
63	FACE OF CURB, CURVE POINT	527630.69	2033317.17	11	BLDG CORNER	527985.47	2033461.24
64	FACE OF CURB, CURVE POINT	527623.89	2033315.20	12	FACE OF CURB, EC	527871.63	2033231.43
65	FACE OF CURB, CURVE POINT	527588.13	2033250.42	13	FACE OF CURB, ANGLE POINT	527884.56	2033244.88
66	FACE OF CURB, CURVE POINT	527590.09	2033243.63	14	FACE OF CURB, ANGLE POINT	527797.18	2033271.92
67	FACE OF CURB, CURVE POINT	527604.09	2033235.90	15	FACE OF CURB, ANGLE POINT	527759.65	2033272.34
68	FACE OF CURB, CURVE POINT	527610.89	2033237.86	16	BLDG CORNER	527821.16	2033461.24
69	EDGE OF S/W, BC	527892.70	2033495.02	17	FACE OF CURB, BC	527741.65	2033238.04
70	EDGE OF S/W, EC	527896.01	2033487.77	18	FACE OF CURB, EC	527735.79	2033258.22
71	EDGE OF S/W, BC	527898.89	2033480.71	19	FACE OF CURB, ANGLE POINT	527712.47	2033271.32
72	EDGE OF S/W, EC	527944.53	2033490.68	20	FACE OF CURB, BC	527692.74	2033282.41
73	EDGE OF S/W, EC	527531.51	2033282.3	21	FACE OF CURB, ANGLE POINT	527681.03	2033279.12
74	EDGE OF S/W, EC	528002.60	2033492.60	22	FACE OF CURB, ANGLE POINT	527685.35	2033263.71
75	EDGE OF S/W, BC	527599.37	2033322.50	23	EDGE OF S/W	527923.63	2033715.58
76	FACE OF CURB, ANGLE POINT	527601.79	2033326.87	24	FACE OF CURB, EC	527665.44	2033274.64
77	FACE OF CURB, CURVE POINT	527599.84	2033333.67	25	FACE OF CURB, BC	527601.81	2033159.39
78	FACE OF CURB, CURVE POINT	527573.60	2033348.22	26	FACE OF CURB, BC	527606.67	2033139.62
79	FACE OF CURB, CURVE POINT	527566.80	2033346.27	27	FACE OF CURB, BC	527556.45	2033172.79
80	FACE OF CURB, ANGLE POINT	527564.38	2033341.89	28	FACE OF CURB, EC	52577.85	2033178.06
81	EDGE OF S/W, EC	528049.22	2033475.69	29	FACE OF CURB, CURVE POINT	527593.97	2033207.22
82	C.L. OF BLDG EAST ENTRANCE	527877.65	2033451.41	30	FACE OF CURB, CURVE POINT	527592.01	2033214.01
83	EDGE OF S/W, BC	528046.32	2033484.65	31	FACE OF CURB, CURVE POINT	527578.00	2033221.74
84	EDGE OF S/W, EC	528048.99	2033487.58	32	FACE OF CURB, CURVE POINT	527571.21	2033219.78
85	FACE OF CURB, BEGIN RAMP	527991.42	2033691.70	33	FACE OF CURB, ANGLE POINT	527563.78	2033206.33
86	FACE OF CURB, END RAMP	528010.54	2033727.34	34	FACE OF CURB, ANGLE POINT	527484.99	2033249.83
87	FACE OF CURB, CURVE POINT	527610.10	2033322.28	35	FACE OF CURB, BC	527494.42	2033266.91
88	EDGE OF S/W, EC	527988.70	2033424.08	36	EDGE OF S/W	527857.85	2033475.41
89	C.L. S/W INTERSECTION	527713.34	2033323.41	37	EDGE OF S/W, BC	527873.58	2033475.41
90	EDGE OF S/W, BC	528014.39	2033409.60	38	EDGE OF S/W, EC	527876.22	2033476.99
91	C.L. S/W INTERSECTION	527921.48	2033539.90	39	EDGE OF S/W	527894.84	2033475.41
92	C.L. S/W INTERSECTION	527928.88	2033554.10	40	EDGE OF S/W, BC	527887.20	2033475.41
93	EDGE OF S/W, EC	528021.83	2033400.78	41	EDGE OF S/W, EC	527884.55	2033479.83
94	EDGE OF S/W, BC	528026.42	2033401..60	42	EDGE OF S/W, BC	527885.55	2033481.69
95	EDGE OF S/W, EC	528020.51	2033390.93	43	FACE OF CURB, BC	527640.81	2033345.84
96	EDGE OF S/W, BC	528019.73	2033394.75	44	FACE OF CURB, EC	527642.77	2033339.05
97	EDGE OF S/W, EC	528004.06	2033361.21	45	FACE OF CURB, BC	527656.78	2033331.31
98	EDGE OF S/W, BC	527999.94	2033360.06	46	FACE OF CURB, EC	527663.58	2033333.27
99	EDGE OF S/W, EC	527969.98	2033368.08	47	FACE OF CURB, EC	527669.24	2033343.58
100	EDGE OF S/W, BC	527998.25	2033350.70	48	EDGE OF S/W, EC	527887.30	2033482.74
101	EDGE OF S/W, EC	527997.14	2033354.75	49	FACE OF CURB, BC	527710.83	2033369.36
102	EDGE OF S/W, BC	527975.03	2033308.75	50	FACE OF CURB, EC	527730.32	2033369.41
103	EDGE OF S/W, EC	527970.87	2033307.62	51	FACE OF CURB, BC	527735.32	2033374.41
104	EDGE OF S/W, BC	527954.65	2033312.08	52	FACE OF CURB ANGLE POINT	527735.32	2033384.41

XX LAYOUT DATA

ITEM	DESC	NORTHERN	EASTERN
105	EDGE OF S/W, BC	527969.22	2033298.24
106	EDGE OF S/W, EC	527968.17	2033302.25
107	EDGE OF S/W, BC	527935.60	2033237.51
108	EDGE OF S/W, EC	527928.84	2033235.54
109	EDGE OF S/W, BC	527927.85	2033223.51
110	EDGE OF S/W, EC	527925.87	2033230.32
111	EDGE OF S/W, BC	527905.50	2033241.40
112	EDGE OF S/W, BC	527893.21	2033248.09
113	EDGE OF S/W, EC	527859.84	2033273.059
114	EDGE OF S/W, BC	527857.23	2033277.45
115	EDGE OF S/W, BC	527840.02	2033285.41
116	EDGE OF S/W, EC	527848.81	2033270.63
117	EDGE OF S/W, BC	527852.36	2033264.61
118	FACE OF CURB, END	527837.56	2033249.95
119	EDGE OF S/W	527775.32	2033326.41
120	EDGE OF S/W	527775.70	2033285.41
121	EDGE OF S/W	527714.16	2033319.52
122	EDGE OF S/W	527724.94	2033320.41
123	EDGE OF S/W	527714.11	2033326.41
124	FACE OF CURB, CORNER	527699.65	2033334.43
125	FACE OF CURB, END	527674.78	2033351.61
126	EDGE OF S/W	527648.30	2033359.41
127	EDGE OF S/W	527569.58	2033403.04
128	EDGE OF S/W, BC	527560.16	2033385.97
129	EDGE OF S/W, EC	527553.36	2033384.02
130	EDGE OF S/W	527535.87	2033393.71
131	EDGE OF S/W	527474.97	2033283.40
132	EDGE OF S/W, EC	527492.47	2033273.70
133	EDGE OF S/W	527533.93	2033286.74
134	EDGE OF S/W	527568.91	2033267.35
135	EDGE OF S/W, BC	527566.49	2033262.98
136	EDGE OF S/W, EC	527559.69	2033261.03
137	EDGE OF S/W, BC	527533.45	2033275.57
138	EDGE OF S/W	527986.22	2033682.00
139	EDGE OF S/W, VERT DEF	527959.36	2033696.41

X CURVE DATA

ITEM	RADIUS	LENGTH	ANGLE
A	15.00'	22.14'	85°35'15"
B	15.00	24.75'	94°32'14"
C	15.00	22.37'	85°27'45"
D	50.00'	26.47'	30°19'40"
E	50.00'	26.18'	30°00'00"
F	15.00'	23.29'	88°56'55"
G	20.00'	31.57'	90°25'38"
H	20.50'	53.91'	150°40'07"
I	5.00'	7.85'	90°00'00"
K	50.00'	53.32'	61°05'44"
L	3.00'	3.24'	61°47'08"
M	3.00'	6.19'	118°12'52"
N	33.00'	11.83'	20°32'25"
O	5.00'	9.21'	105°34'07"
P	43.41'	49.33'	65°06'26"
Q	42.62'	63.92'	85°56'59"
R	57.86'	46.81'	46°21'26"
S	3.00'	4.33'	82°41'09"
T	3.00'	4.92'	93°55'08"
U	30.04'	30.83'	58°47'36"
V	37.13'	11.58'	17°52'07"
W	3.00'	5.34'	101°57'42"
X	3.00'	4.25'	81°10'45"
Y	3.00'	4.76'	91°00'04"
Z	59.98'	31.37'	29°57'50"
AA	3.00'	4.65'	88°45'48"
AB	31.76'	17.03'	30°43'00"
AC	3.00'	4.80'	91°45'14"
AD	3.00'	4.57'	87°19'15"
AE	5.00'	7.82'	89°34'34"
AF	5.00'	7.89'	90°25'26"
AG	3.00'	4.71'	90°00'00"
AH	5.00'	5.36'	61°27'20"
AI	10.00'	20.69'	118°32'20"
AJ	2.00'	2.15'	61°28'34"

JBY# 0622-12

REGISTERED PROFESSIONAL ENGINEER JONATHAN E. BERLOCHI NO. 60229 EXP. 6-30-2012 CIVIL STATE OF CALIFORNIA

JB YOUNG & ASSOCIATES, LTD
11440 Riverside Drive, Suite M
Lakeside, California 92040
(619) 448-9424
(619) 448-4690 FAX

DATE	SYM	REVISION	BY	A'PD

NATIONAL AERONAUTICS AND SPACE ADMINISTRATION
DRYDEN FLIGHT RESEARCH CENTER
EDWARDS, CA

DRAWING TITLE: LAYOUT PLAN

PROJECT TITLE: 8-18-11
FACILITIES SUPPORT CENTER
100% FINAL DESIGN SUBMITTAL

APPROVALS	DATE
Chief, Facilities Engineering & Asset Mgmt. Office DAN CROWLEY	8-18-11
Project Requestor/Customer DAN CROWLEY	8-18-11
Facilities Project Manager GEMMA FLORES	8-18-11
Chief, Office of Protective Services JOHN ZELLMER	8-18-11
Chief – Safety, Health and Environmental Office DAN MULLEN	8-18-11
DFRC Chief Information Officer KEN NORLIN	8-18-11

DATE STRTD	11/04/10	DATE PRNTD	05/23/11
DRAWN BY	JBY	EDM-1703	
SCALE	AS NOTED	TRADE SH. No. C-6.1	
FILE NAME		SHEET No. 14 of 195	

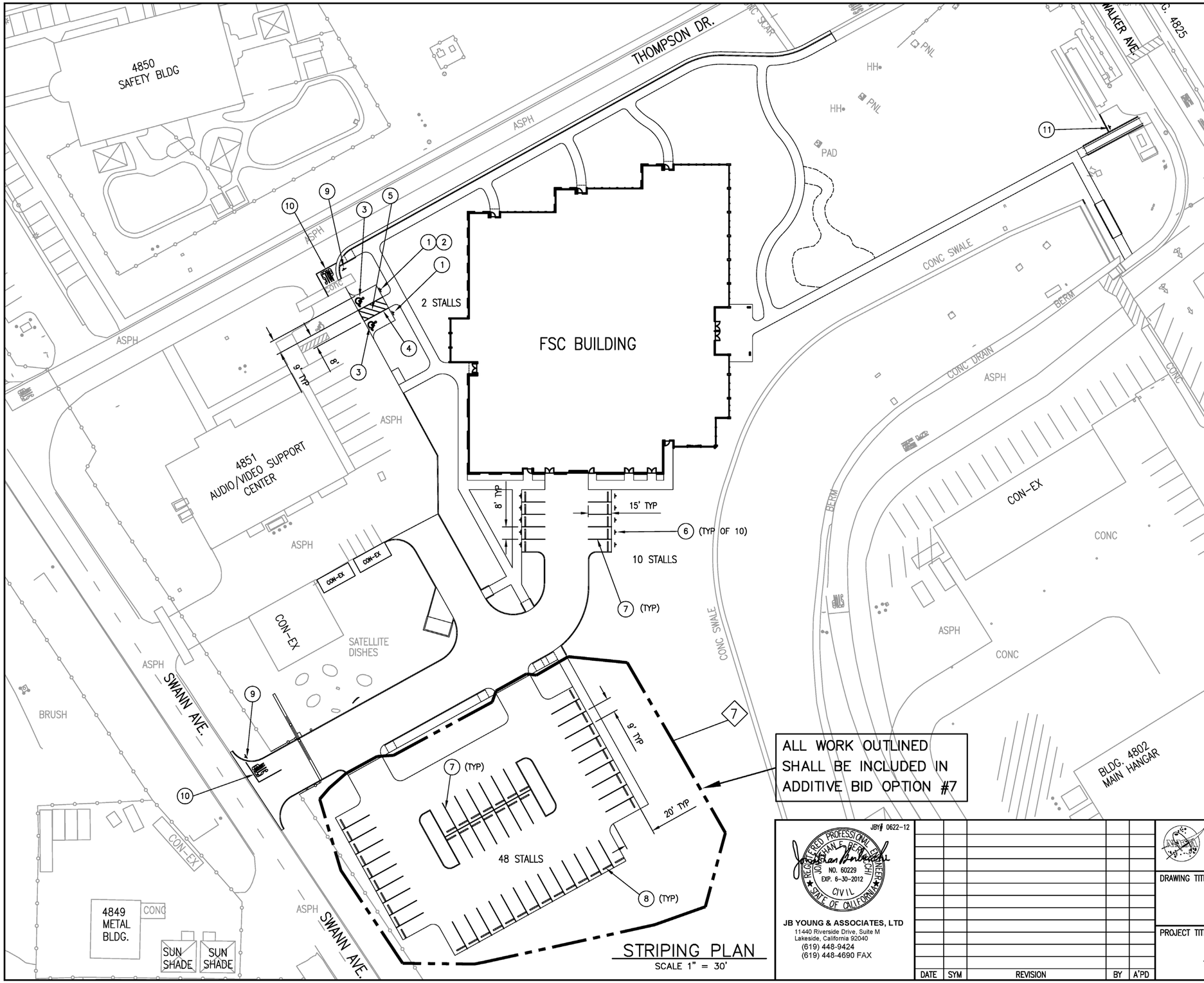

STRIPING PLAN
SCALE 1" = 30'

(XX) NOTES:

1) NEW HANDICAP PARKING SIGN, SEE DETAIL 1 C-7.1 | C-8.6
2) NEW VAN ACCESSIBLE PARKING SIGN, SEE DETAIL 1 C-7.1 | C-8.6
3) NEW HANDICAP PARKING PAINTED SYMBOL, SEE DETAIL 1 C-7.1 | C-8.6
4) NEW BLUE PAINTED 4" WIDE STRIPE.
5) NEW BLUE PAINTED 4" WIDE STRIPE AT 45° AND 36" ON CENTER.
6) NEW ELECTRIC VEHICLE PARKING SIGN, SEE DETAIL 5 C-7.1 | C-8.5
7) NEW WHITE PAINTED 4" WIDE STRIPE.
8) NEW PRE-CAST CONCRETE WHEEL STOP, SEE DETAIL 2 C-7.1 | C-8.5
9) NEW STOP SIGN, SEE DETAIL 6 C-7.1 | C-8.5
10) NEW PAINTED STOP BAR AND TEXT, SEE DETAIL 4 C-7.1 | C-8.5
11) INSTALL SALVAGED METAL SIGN AND POST. INSTALL NEW CONC FOUNDATION.

JBY# 0622-12

REGISTERED PROFESSIONAL ENGINEER
JONATHAN BERNSCHER
NO. 60229
EXP. 6-30-2012
CIVIL
STATE OF CALIFORNIA

JB YOUNG & ASSOCIATES, LTD
11440 Riverside Drive, Suite M
Lakeside, California 92040
(619) 448-9424
(619) 448-4690 FAX

DATE	SYM	REVISION	BY	A'PD

NATIONAL AERONAUTICS AND SPACE ADMINISTRATION
DRYDEN FLIGHT RESEARCH CENTER
EDWARDS, CA

DRAWING TITLE
STRIPING PLAN

PROJECT TITLE
8-18-11
FACILITIES SUPPORT CENTER
100% FINAL DESIGN SUBMITTAL

APPROVALS		DATE
Chief, Facilities Engineering & Asset Mgmt. Office DAN CROWLEY		8-18-11
Project Requestor/Customer DAN CROWLEY		8-18-11
Facilities Project Manager GEMMA FLORES		8-18-11
Chief, Office of Protective Services JOHN ZELLMER		8-18-11
Chief – Safety, Health and Environmental Office DAN MULLEN		8-18-11
DFRC Chief Information Officer KEN NORLIN		8-18-11

DATE STRTD	11/04/10	DATE PRNTD	05/23/11
DRAWN BY	JBY	EDM-1703	
SCALE	AS NOTED	TRADE SH. No. C-7.1	
FILE NAME		SHEET No. 15 of 195	

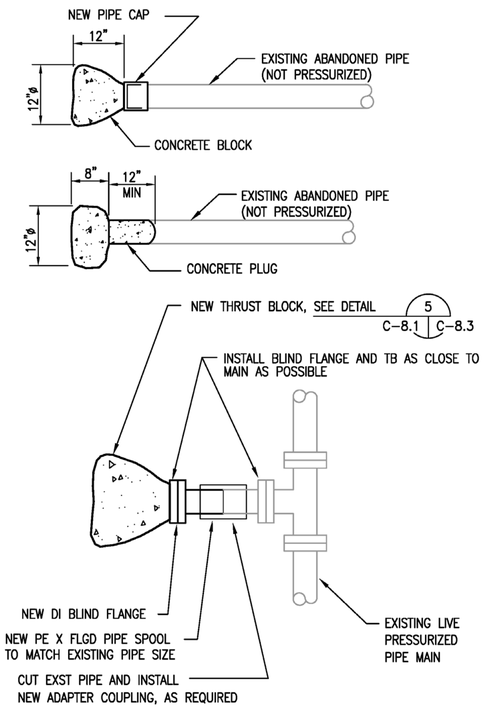

NOTES:
1) ALL ABANDONED PIPING SHALL BE CAPPED OR PLUGGED.

CAP EXST ABANDONED PIPE

DETAIL 1 — NO SCALE — C-2.1 C-8.1 C-2.2

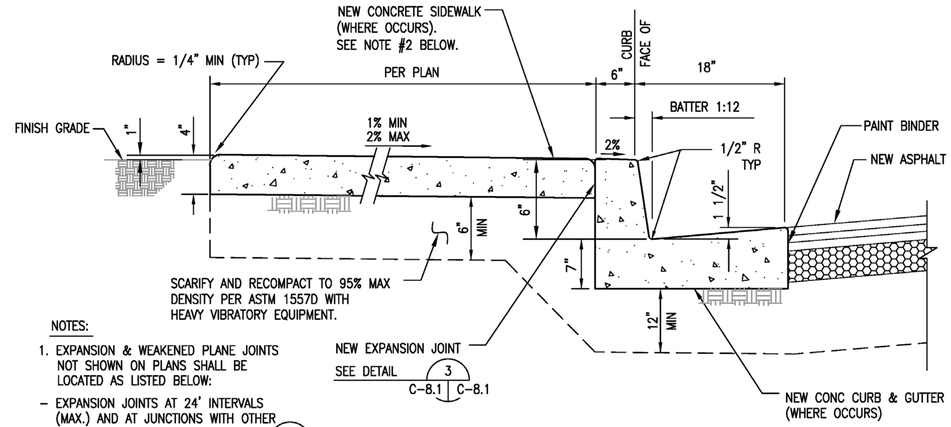

NOTES:
1. EXPANSION & WEAKENED PLANE JOINTS NOT SHOWN ON PLANS SHALL BE LOCATED AS LISTED BELOW:
   - EXPANSION JOINTS AT 24' INTERVALS (MAX.) AND AT JUNCTIONS WITH OTHER WALKS AND SLABS. SEE DETAIL 3 C-8.1 C-8.1
   - WEAKENED PLANE JOINTS AT 6' INTERVALS (MAX). SEE DETAIL 3 C-8.1 C-8.1
2. NEW SIDEWALK PANEL FINISH SHALL ALTERNATE BETWEEN "LIGHT BROOM FINISH" AND "MEDIUM ROCK SALT FINISH". MATCH EXISTING DRYDEN SIDEWALK FINISH PATTERNS.
3. NEW PVMT SOLAR REFLECTIVE INDEX (SDR) SHALL BE GREATER THAN 29.0.
4. SEE DRAWING C-6.1 FOR SIDEWALK DIMENSIONS.

NEW SIDEWALK AND 6" CONC CURB & GUTTER

DETAIL 2 — NO SCALE — C-3.1 C-8.1

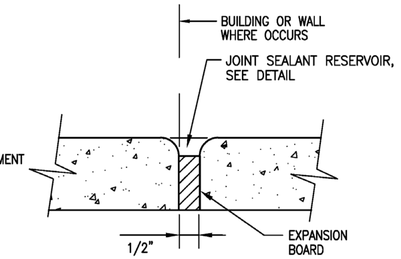

EXPANSION JOINT

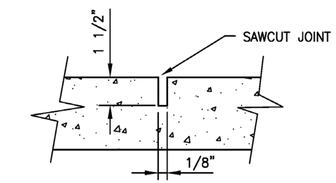

WEAKENED PLANE JOINT

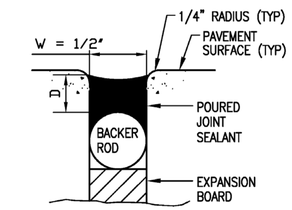

JOINT SEALANT RESERVOIR

NOTES:
1) W = WIDTH OF SEALANT RESERVOIR.
2) D = DEPTH OF SEALANT = 0.5 X W FOR SILICONE SEALANT.
3) DIAMETER OF BACKER ROD = W + 1/8".
4) TOP OF SEALANT SHALL BE 1/4" TO 1/16" BELOW TOP OF PVMT.

CONCRETE PAVEMENT CONTROL JOINTS

DETAIL 3 — NO SCALE — C-8.1 C-8.1 C-8.6 C-8.2 C-8.9 C-8.4 C-3.1

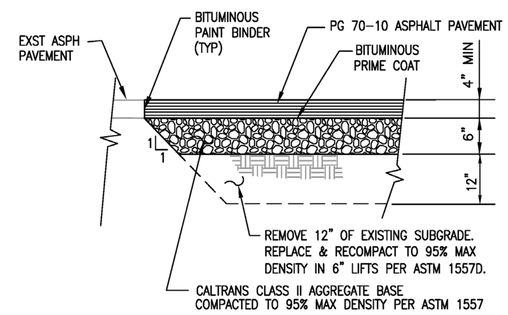

NEW ASPHALT PAVEMENT

DETAIL 6 — NO SCALE — C-3.2 C-3.1 C-8.1 C-4.1

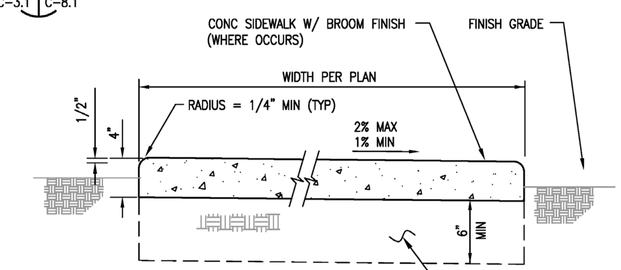

NOTES:
1) EXPANSION & WEAKENED PLANE JOINTS NOT SHOWN ON PLANS SHALL BE LOCATED AS LISTED BELOW:
   - EXPANSION JOINTS AT 24' INTERVALS (MAX.) AND AT JUNCTIONS WITH OTHER WALKS AND SLABS. SEE DETAIL 3 C-8.1 C-8.1
   - WEAKENED PLANE JOINTS AT 6' INTERVALS (MAX). SEE DETAIL 3 C-8.1 C-8.1
2) MAXIMUM SLOPE OF SIDEWALK WALKING PATH = 5%.
3) NEW SIDEWALK PANEL FINISH SHALL ALTERNATE BETWEEN "LIGHT BROOM FINISH" AND "MEDIUM ROCK SALT FINISH". MATCH EXISTING DRYDEN SIDEWALK FINISH PATTERNS.
4) NEW PVMT SOLAR REFLECTIVE INDEX (SDR) SHALL BE GREATER THAN 29.0.
5) SEE DRAWING C-6.1 FOR SIDEWALK DIMENSIONS.

NEW CONCRETE SIDEWALK / PATIO

DETAIL 7 — NO SCALE — C-3.1 C-8.1

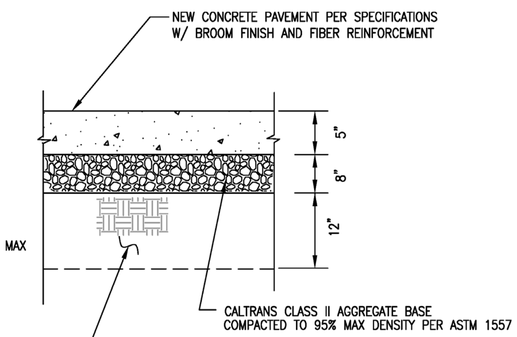

NOTES:
1. INSTALL EXPANSION & WEAKENED PLANE JOINTS PER JOINT PLAN ON DRAWING C-8.9.
2. NEW PVMT SOLAR REFLECTIVE INDEX (SDR) SHALL BE GREATER THAN 29.0.
3. SEE DRAWING C-6.1 FOR DRIVEWAY DIMENSIONS.

NEW CONCRETE DRIVEWAY PAVEMENT

DETAIL 8 — NO SCALE — C-3.1 C-8.1 C-3.2

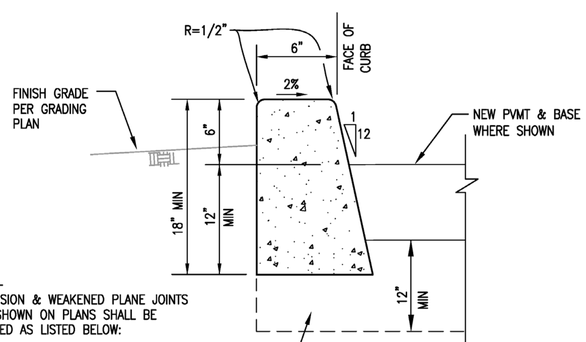

NOTES:
1. EXPANSION & WEAKENED PLANE JOINTS NOT SHOWN ON PLANS SHALL BE LOCATED AS LISTED BELOW:
   - EXPANSION JOINTS AT 24' INTERVALS (MAX.) AND AT JUNCTIONS WITH OTHER WALKS AND SLABS. SEE DETAIL 3 C-8.1 C-8.1
   - WEAKENED PLANE JOINTS AT 6' INTERVALS (MAX). SEE DETAIL 3 C-8.1 C-8.1
2. NEW PVMT SOLAR REFLECTIVE INDEX (SDR) SHALL BE GREATER THAN 29.0.

6" CONCRETE CURB

DETAIL 4 — NO SCALE — C-5.1 C-3.1 C-8.1 C-5.2

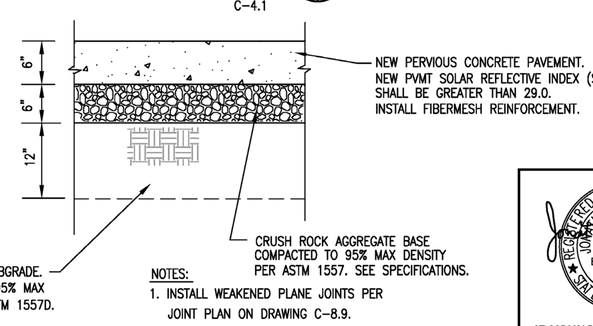

NOTES:
1. INSTALL WEAKENED PLANE JOINTS PER JOINT PLAN ON DRAWING C-8.9.

NEW PERVIOUS CONCRETE PARKING LOT

DETAIL 5 — NO SCALE — C-3.1 C-8.1

JBY# 0622-12

REGISTERED PROFESSIONAL ENGINEER — JONATHAN BERNHARDT — NO. 60229 — EXP. 6-30-2012 — CIVIL — STATE OF CALIFORNIA

JB YOUNG & ASSOCIATES, LTD
11440 Riverside Drive, Suite M
Lakeside, California 92040
(619) 448-9424
(619) 448-4690 FAX

DATE	SYM	REVISION	BY	A'PD

NATIONAL AERONAUTICS AND SPACE ADMINISTRATION
DRYDEN FLIGHT RESEARCH CENTER
EDWARDS, CA

DRAWING TITLE
CIVIL DETAILS

PROJECT TITLE
8-18-11
FACILITIES SUPPORT CENTER
100% FINAL DESIGN SUBMITTAL

APPROVALS	DATE
Chief, Facilities Engineering & Asset Mgmt. Office DAN CROWLEY	8-18-11
Project Requestor/Customer DAN CROWLEY	8-18-11
Facilities Project Manager GEMMA FLORES	8-18-11
Chief, Office of Protective Services JOHN ZELLMER	8-18-11
Chief – Safety, Health and Environmental Office DAN MULLEN	8-18-11
DFRC Chief Information Officer KEN NORLIN	8-18-11

DATE STRTD	11/04/10	DATE PRNTD	05/23/11
DRAWN BY	JBY	EDM-1703	
SCALE	AS NOTED	TRADE SH. No.	C-8.1
FILE NAME		SHEET No.	16 of 195

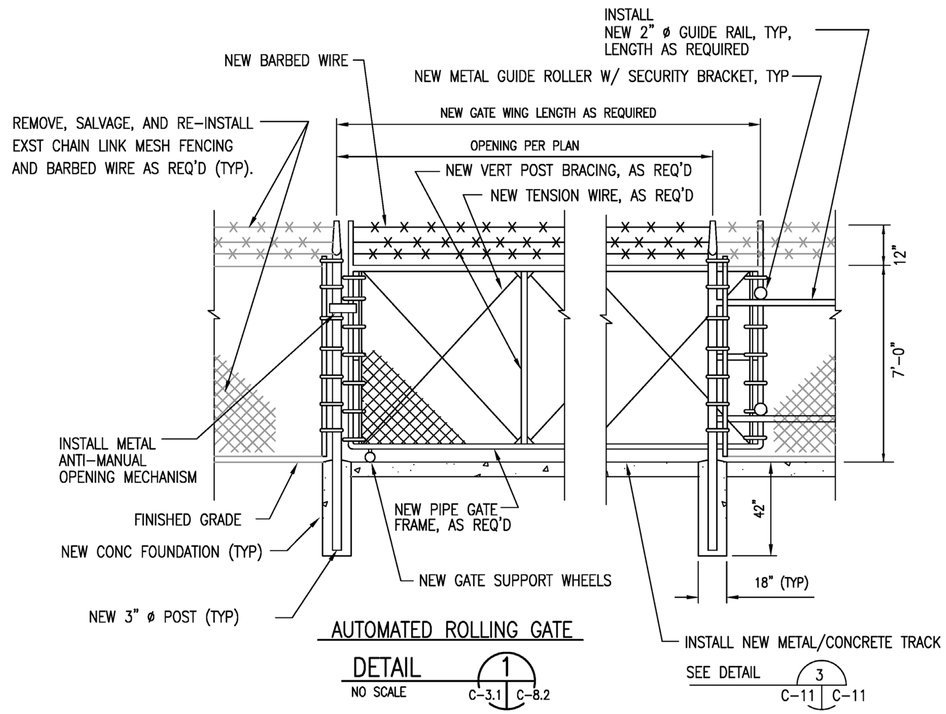

AUTOMATED ROLLING GATE

DETAIL 1
NO SCALE C-3.1 C-8.2

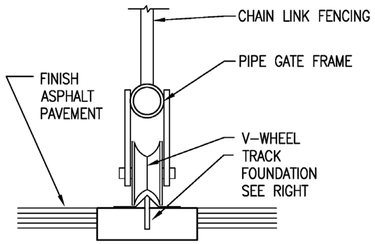

V-TRACK SECTION

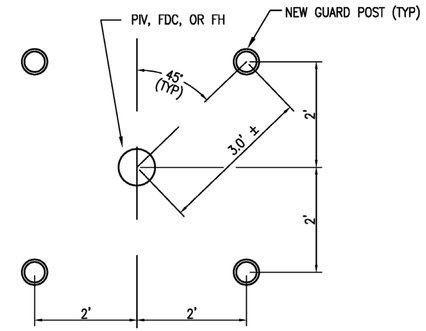

PLAN

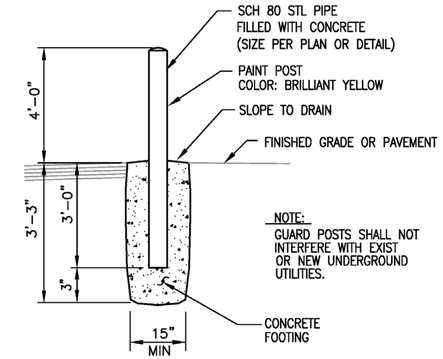

SECTION

GUARD POST

DETAIL 2
NO SCALE C-4.1 C-8.2

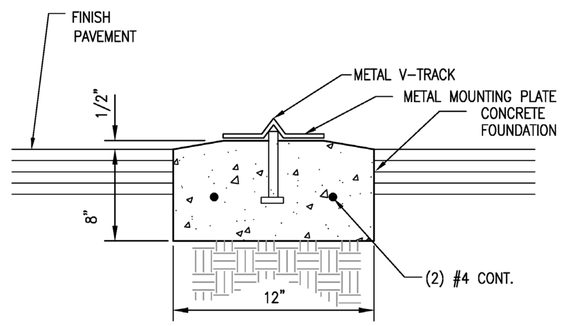

TRACK FOUNDATION

ROLLING GATE TRACK

DETAIL 3
NO SCALE C-11 C-11

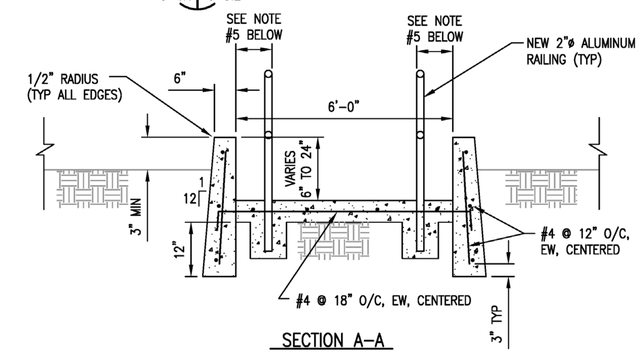

SECTION A-A

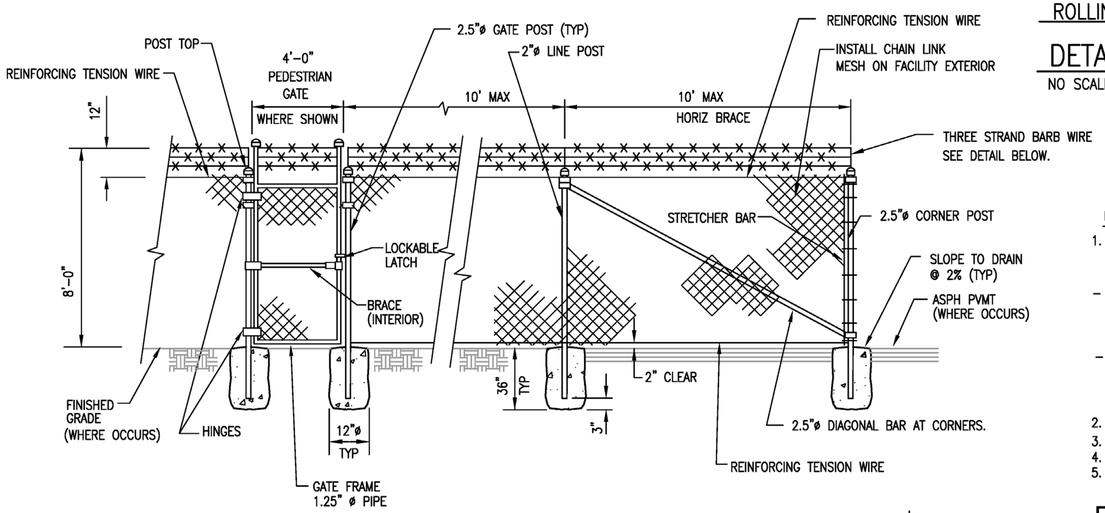

NOTES:

1. EXPANSION & WEAKENED PLANE JOINTS NOT SHOWN ON PLANS SHALL BE LOCATED AS LISTED BELOW:
   - EXPANSION JOINTS AT RAMP LANDINGS.
     SEE DETAIL 3 C-8.2 C-8.1
   - WEAKENED PLANE JOINTS AT 6' INTERVALS (MAX). SEE DETAIL 3 C-8.2 C-8.1
2. NEW RAMP SHALL HAVE "MEDIUM BROOM FINISH"
3. MAX SLOPE FOR HANDICAP RAMP = 8.33%
4. MAX SLOPE = 2.0% FOR HANDICAP RAMP LANDING.
5. 12" FOR HANDICAP RAMP. 6" FOR NON-HANDICAP RAMP.

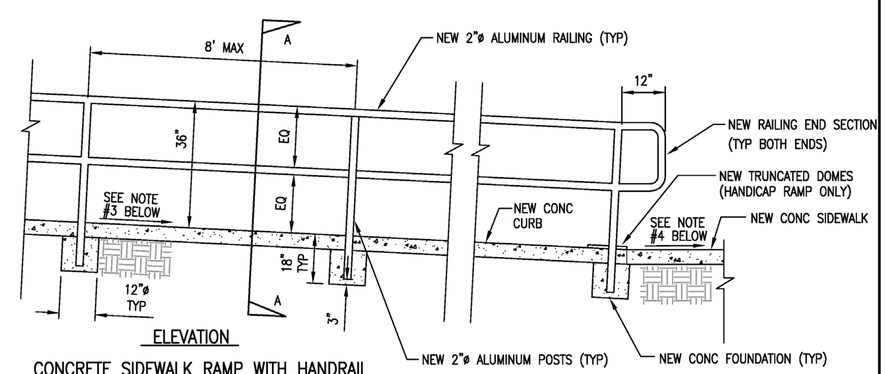

ELEVATION

CONCRETE SIDEWALK RAMP WITH HANDRAIL

DETAIL 4
NO SCALE C-3.1 C-8.2
C-8.4

NOTE:

1) USE CLASS I GALV STEEL PIPE GRADE A OR B FOR POSTS, TOP RAILS, AND BRACES.
2) USE TYPE I ZINC COATED STEEL 9 GAGE WIRE SIZE WITH 2" MESH SIZE FOR CHAIN LINK MESH.
3) ALL PIPE DIAMETERS SHOWN ARE OUTSIDE DIAMETER.
4) NEW FENCE POSTS SHALL BE A MINIMUM OF 18" CLEAR OF EXISTING OR NEW UTILITIES.

ELEVATION – FENCING

DETAIL 5
NO SCALE C-3.3 C-8.2
C-3.1

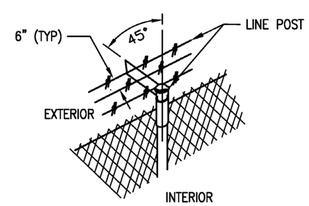

BARBED WIRE

JBY# 0622-12

REGISTERED PROFESSIONAL ENGINEER
JOSHUA BERNHARDT
NO. 60229
EXP. 6-30-2012
CIVIL
STATE OF CALIFORNIA

JB YOUNG & ASSOCIATES, LTD
11440 Riverside Drive, Suite M
Lakeside, California 92040
(619) 448-9424
(619) 448-4690 FAX

DATE	SYM	REVISION	BY	A'PD

NATIONAL AERONAUTICS AND SPACE ADMINISTRATION

DRYDEN FLIGHT RESEARCH CENTER
EDWARDS, CA

DRAWING TITLE

CIVIL DETAILS

PROJECT TITLE

8-18-11

FACILITIES SUPPORT CENTER
100% FINAL DESIGN SUBMITTAL

APPROVALS		DATE
Chief, Facilities Engineering & Asset Mgmt. Office DAN CROWLEY		8-18-11
Project Requestor/Customer DAN CROWLEY		8-18-11
Facilities Project Manager GEMMA FLORES		8-18-11
Chief, Office of Protective Services JOHN ZELLMER		8-18-11
Chief – Safety, Health and Environmental Office DAN MULLEN		8-18-11
DFRC Chief Information Officer KEN NORLIN		8-18-11

DATE STRTD	11/04/10	DATE PRNTD	05/23/11
DRAWN BY	JBY	EDM-1703	
SCALE	AS NOTED	TRADE SH. No. C-8.2	SHEET No. 17 of 195
FILE NAME			

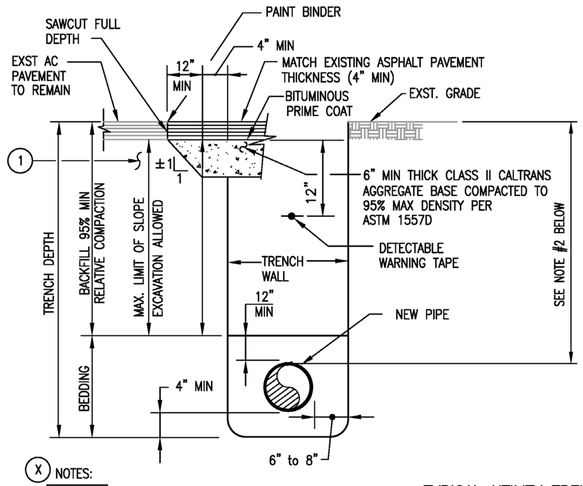

X NOTES:

1. EXISTING AGGREGATE BASE COURSE TO BE PROTECTED AND REMAIN UNDISTURBED TO PREVENT LOSS OF DENSITY AND SUPPORT UNDER EXISTING BITUMINOUS PAVEMENT.
2) MIN DEPTH = 24" FOR NATURAL GAS LATERALS
MIN DEPTH = 24" FOR SEWER MAIN LATERAL
MIN DEPTH = 12" FOR STORM DRAIN PIPE (NON-TRAFFIC AREAS)
MIN DEPTH = 24" FOR STORM DRAIN PIPE (TRAFFIC AREAS)
MIN DEPTH = 24" FOR POTABLE WATER LATERALS
MIN DEPTH = 36" FOR POTABLE WATER MAINS
MIN DEPTH = 48" FOR FIRE WATER MAINS OR LATERALS
MIN DEPTH = 12" FOR ROOF DRAIN PIPE (NON-TRAFFIC, PLANTER AREAS)

TYPICAL UTILITY TRENCH

DETAIL 1 — NO SCALE — C-4.1 | C-8.3 — C-5.1 C-5.2

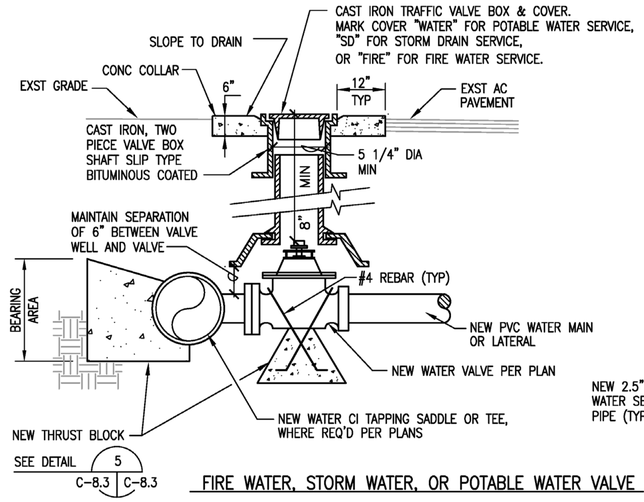

FIRE WATER, STORM WATER, OR POTABLE WATER VALVE

DETAIL 2 — NO SCALE — C-4.1 | C-8.3 — C-5.2

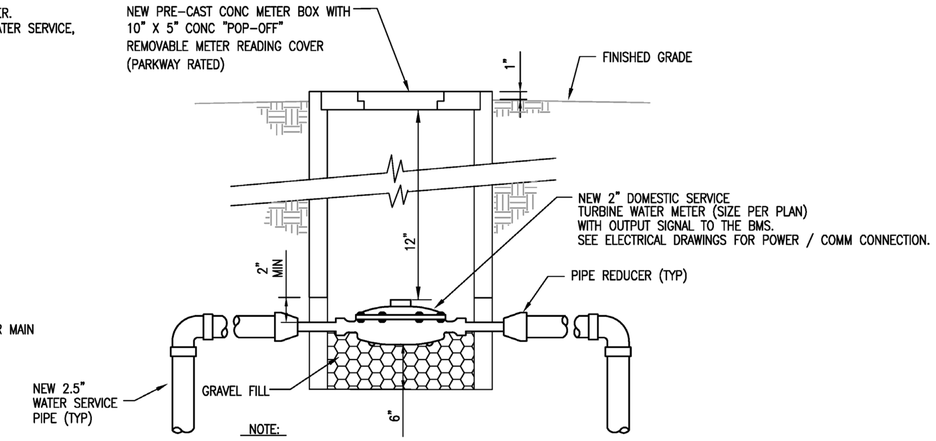

NOTE:
1) MINIMUM DISTANCE BETWEEN METER AND FIRST UPSTREAM & DOWNSTREAM FITTING PER MANUF. RECOMMENDATIONS.

DOMESTIC WATER METER

DETAIL 3 — NO SCALE — C-4.1 | C-8.3

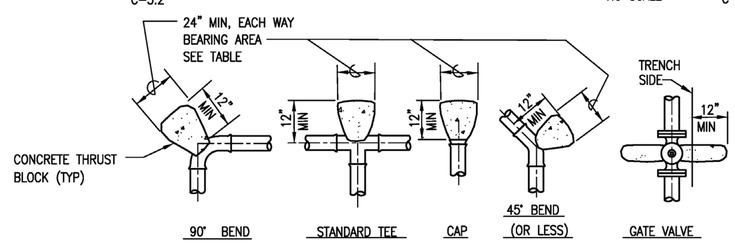

PIPE SIZE	FITTINGS 90°	45°	22 1/2°	11 1/4°	TEE, CAP & GV	BEARING AREA (SQ. FEET)
2 1/2"	1.4	1.0	0.5	0.3	1.2	
3"	2.0	1.1	0.6	0.3	1.4	
4"	3.5	2.0	1.0	0.5	2.5	
6"	7.9	4.5	2.3	1.1	5.7	
8"	14.1	8.0	4.0	2.0	10.1	
12"	31.7	18.1	9.0	4.5	22.6	
16"	56.3	32.2	16.1	8.0	40.2	

NOTES:
1. MAX. ALLOWABLE SOIL PRESSURE (MASP) = 1000 PSF
2. DESIGN OPERATING PRESSURE (DOP) = 120 PSI
3. DESIGN TEST PRESSURE (DTP) = 200 PSI
4. CONCRETE THRUST BLOCKS SHALL NOT INFRINGE ON VALVE OPERATORS, BOLTS, ETC.
5. ALL THRUST BLOCK BEARING AREAS SHALL BE CARRIED TO UNDISTURBED SOIL.
6. THRUST BLOCKS SHALL BE USED AT CONNECTIONS BETWEEN EXISTING & NEW PIPE MAINS WHERE JOINTS ARE NOT RESTRAINED.

HORIZONTAL BEND THRUST BLOCK TABLE AND DETAILS

DETAIL 5 — NO SCALE — C-4.1 | C-8.3 — C-8.1 C-8.3 C-8.4 C-8.8

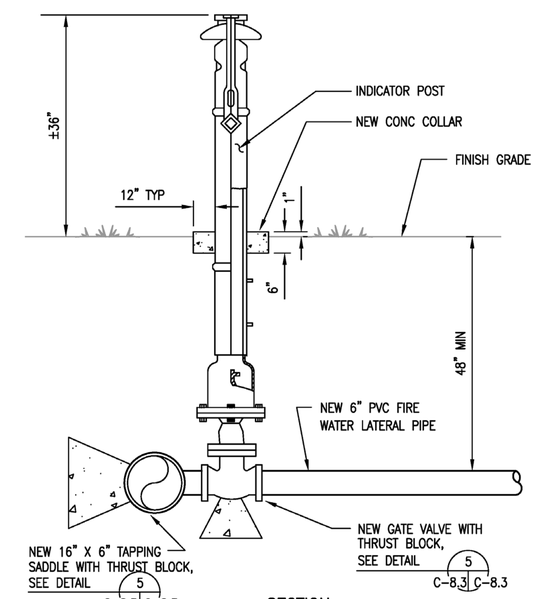

SECTION
POST INDICATOR VALVE

DETAIL 6 — NO SCALE — C-4.1 | C-8.3

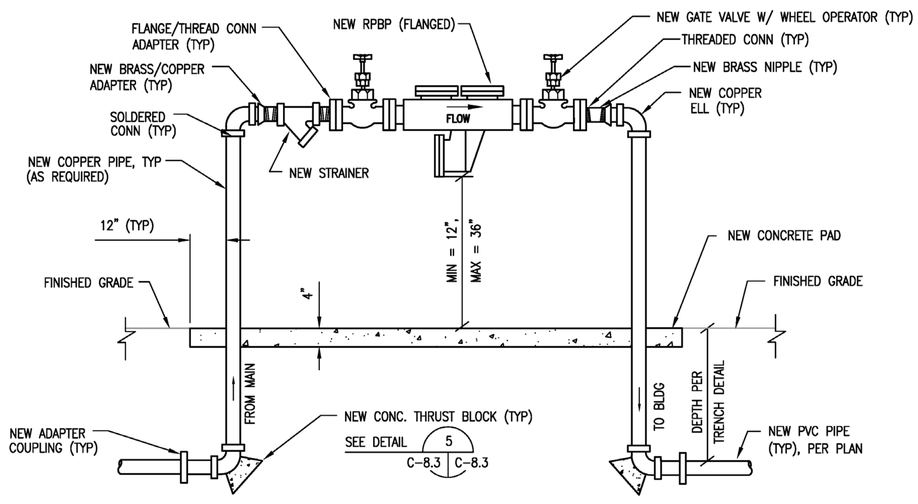

NOTES:
1) NEW RPBP SIZE PER PLAN.
2) NEW PIPE, FITTINGS, AND STRAINER SIZE SHALL MATCH RPBP SIZE.
3) RPBP SHALL HAVE A MIN 12" CLEARANCE ON ALL SIDES.
4) ALL ABOVE GROUND PIPING AND APPURTENANCES SHALL BE INSULATED. DO NOT BLOCK DRAIN OR MANUFACTURERS DATA.
5) WRAP PIPE THROUGH CONCRETE WITH 30# FELT.
6) ALL NEW BPA'S SHALL BE TESTED AND CERTIFIED AFTER INSTALLATION. SUBMIT TESTING AND CERTIFICATION FORM TO THE CONTRACTING OFFICER.

RPBP INSTALLATION

DETAIL 4 — NO SCALE — C-4.1 | C-8.3

JBY# 0622-12

REGISTERED PROFESSIONAL ENGINEER — JOHN BRAHAM BERNACHI — NO. 60229 — EXP. 6-30-2012 — CIVIL — STATE OF CALIFORNIA

JB YOUNG & ASSOCIATES, LTD
11440 Riverside Drive, Suite M
Lakeside, California 92040
(619) 448-9424
(619) 448-4690 FAX

DATE	SYM	REVISION	BY	A'PD

NATIONAL AERONAUTICS AND SPACE ADMINISTRATION
DRYDEN FLIGHT RESEARCH CENTER
EDWARDS, CA

DRAWING TITLE
CIVIL DETAILS

PROJECT TITLE
8-18-11
FACILITIES SUPPORT CENTER
100% FINAL DESIGN SUBMITTAL

APPROVALS	DATE
Chief, Facilities Engineering & Asset Mgmt. Office DAN CROWLEY	8-18-11
Project Requestor/Customer DAN CROWLEY	8-18-11
Facilities Project Manager GEMMA FLORES	8-18-11
Chief, Office of Protective Services JOHN ZELLMER	8-18-11
Chief – Safety, Health and Environmental Office DAN MULLEN	8-18-11
DFRC Chief Information Officer KEN NORLIN	8-18-11

DATE STRTD	11/04/10	DATE PRNTD	05/23/11
DRAWN BY	JBY	EDM-1703	
SCALE	AS NOTED	TRADE SH. No. C-8.3	
FILE NAME		SHEET No. 18 of 195	

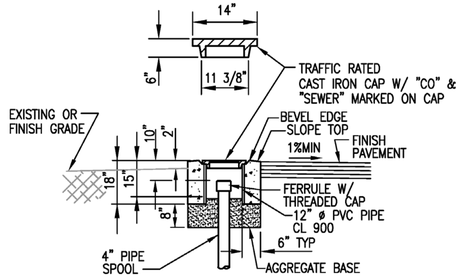

NOTE: PRECAST CONCRETE HANDHOLE WITH ABOVE CAP MAY BE USED IN LIEU OF CAST-IN-PLACE HANDHOLE. PROVIDE MINIMUM 6" ANNULAR CONCRETE COLLAR.

CLEANOUT ACCESS DETAIL

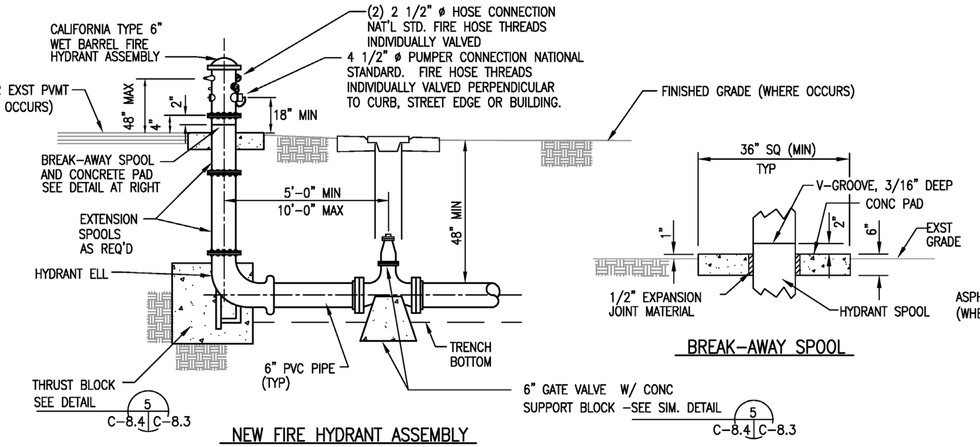

NEW FIRE HYDRANT ASSEMBLY

DETAIL 2 (C-4.1 | C-8.4) NO SCALE

BREAK-AWAY SPOOL

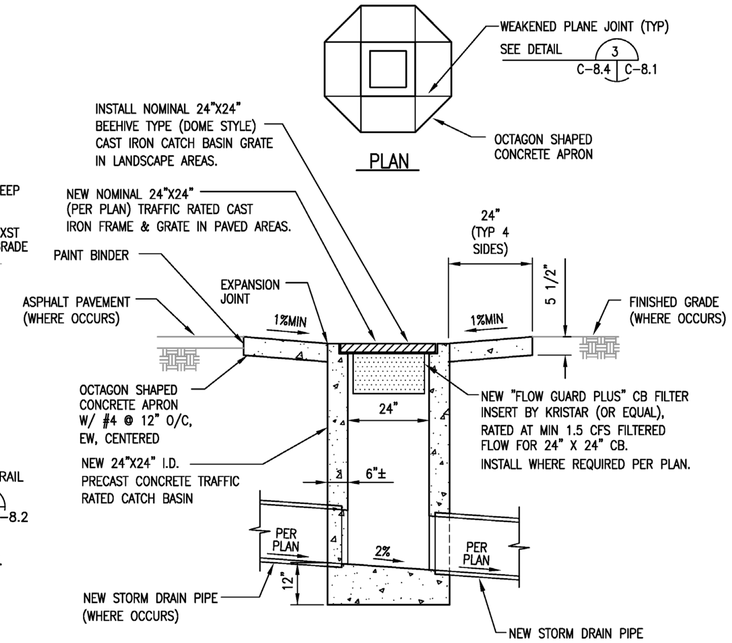

NOTE: CONCRETE CATCH BASIN, FRAME & GRATE SHALL BE H-20 TRAFFIC RATED.

SECTION

CATCH BASIN

DETAIL 4 (C-5.1 | C-8.4; C-5.2) NO SCALE

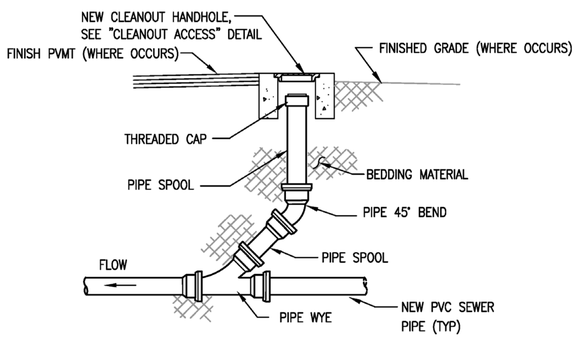

NOTE:
1) CLEANOUT PIPE SIZE SHALL MATCH LATERAL PIPE SIZE.
2) CONC COLLAR NOT REQ'D IF CLEANOUT IS LOCATED WITHIN CONC PAVEMENT.
3) SINGLE CLEANOUTS, ORIENTATE TO FACILITATE CLEANING DOWN STREAM.

SEWER CLEANOUT DETAIL

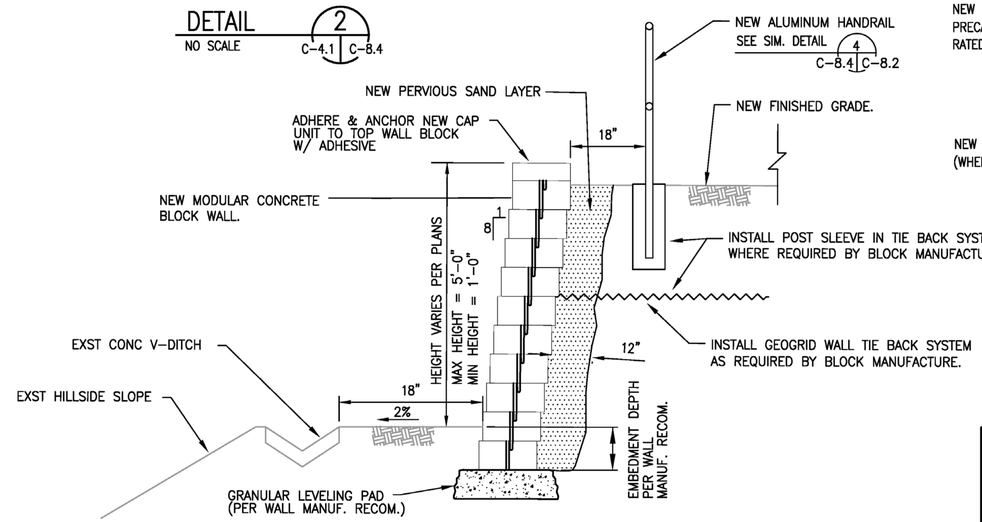

NOTE:
1) CONTRACTOR SHALL INSTALL GEO-GRID REINFORCEMENT WHEN REQUIRED BY BLOCK MANUF. RECOMMENDATIONS.
2) BLOCK COLOR = # 2828 "COLONIAL REVIVAL TAN".
3) CONTRACTOR SHALL SUBMIT MANUFACTURER DESIGN, CALCULATIONS, AND INSTALLATION INSTRUCTIONS.

TYPICAL MODULAR BLOCK GRAVITY WALL

DETAIL 3 (C-5.1 | C-8.4; C-5.2) NO SCALE

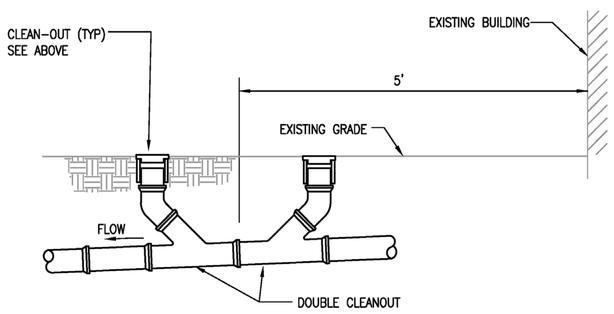

SEWER DOUBLE CLEANOUT LOCATION DETAIL

DETAIL 1 (C-4.1 | C-8.4) NO SCALE

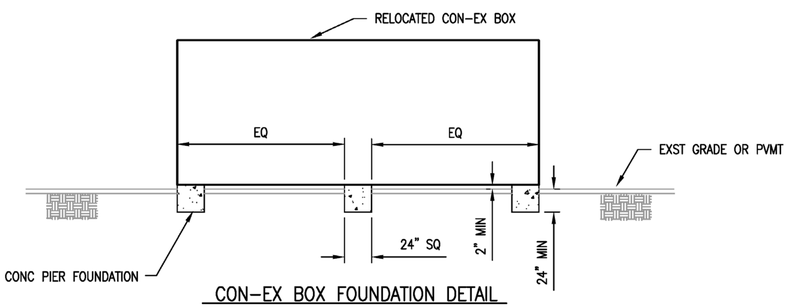

CON-EX BOX FOUNDATION DETAIL

DETAIL 5 (C-3.3 | C-8.4; C-3.1) NO SCALE

JBY# 0622-12

REGISTERED PROFESSIONAL ENGINEER — JONATHAN BERNSTEIN — NO. 60229 — EXP. 6-30-2012 — CIVIL — STATE OF CALIFORNIA

JB YOUNG & ASSOCIATES, LTD
11440 Riverside Drive, Suite M
Lakeside, California 92040
(619) 448-9424
(619) 448-4690 FAX

DATE	SYM	REVISION	BY	A'PD

NATIONAL AERONAUTICS AND SPACE ADMINISTRATION
DRYDEN FLIGHT RESEARCH CENTER
EDWARDS, CA

DRAWING TITLE: CIVIL DETAILS

PROJECT TITLE: 8-18-11
FACILITIES SUPPORT CENTER
100% FINAL DESIGN SUBMITTAL

APPROVALS	DATE
Chief, Facilities Engineering & Asset Mgmt. Office DAN CROWLEY	8-18-11
Project Requestor/Customer DAN CROWLEY	8-18-11
Facilities Project Manager GEMMA FLORES	8-18-11
Chief, Office of Protective Services JOHN ZELLMER	8-18-11
Chief – Safety, Health and Environmental Office DAN MULLEN	8-18-11
DFRC Chief Information Officer KEN NORLIN	8-18-11

DATE STRTD	11/04/10	DATE PRNTD	05/23/11
DRAWN BY	JBY	EDM-1703	
SCALE	AS NOTED	TRADE SH. No. C-8.4	SHEET No. 19 of 195
FILE NAME			

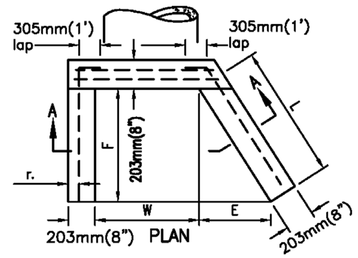

U TYPE WING TYPE

PLAN

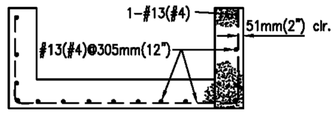

SECTION A-A

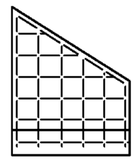

WING WALL REINFORCING

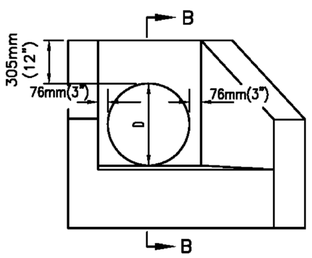

ELEVATION

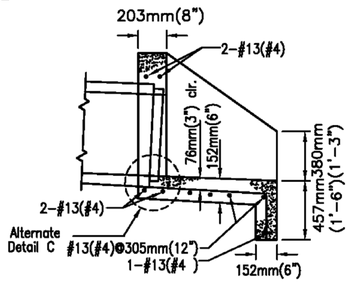

SECTION B-B

NOTE:
1) E = 15"
2) L = 27"
3) F = 22 1/2"
4) W = 18"
5) EXPOSED CORNERS SHALL BE CHAMFERED 3/4".
6) INSTALL WING WALL TYPE HEADWALL.

CONCRETE HEADWALL

DETAIL 1
NO SCALE C-5.2 | C-8.5

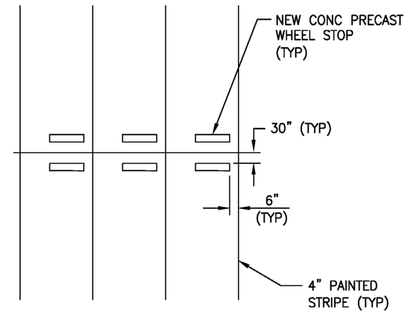

STRAIGHT WHEEL STOP LAYOUT

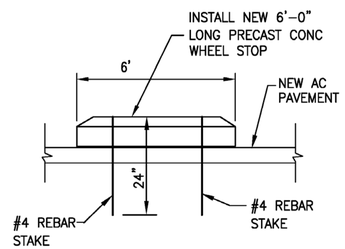

ELEVATION
NEW WHEEL STOP

DETAIL 2
NO SCALE C-7.1 | C-8.5

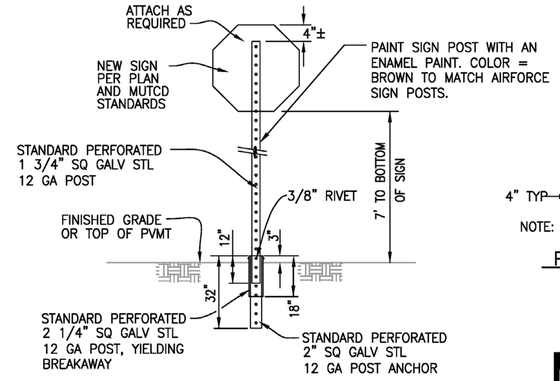

NOTE: BREAKAWAY POST SYSTEM TO BE GALVANIZED PER ASTM A525

INSTALL NEW SIGN

DETAIL 3
NO SCALE C-8.2 | C-8.5
C-8.5

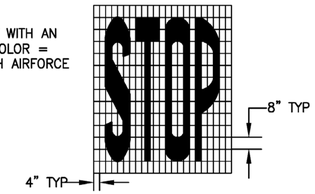

NOTE: PAINT LETTERING SOLID WHITE

PAINTED "STOP" LETTERING

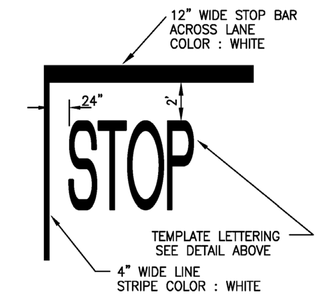

"STOP" BAR

DETAIL 4
NO SCALE C-7.1 | C-8.5

NOTES:
1) INSTALL METAL POST, PER DETAIL 3 (C-8.5 | C-8.5)
2) NEW SIGN SHALL BE 18" TALL X 12" WIDE X 12 GAGE ALUMINUM.
3) NEW SIGN SHALL HAVE 3/4" RADIUS CORNERS.
4) SIGN SHALL HAVE GREEN LETTERING WITH WHITE BACKGROUND.

DETAIL 5
NO SCALE C-7.1 | C-8.5

R1-1

NOTES:
1) INSTALL METAL POST, PER DETAIL 3 (C-8.5 | C-8.5)
2) STOP SIGN = MUTCD R1-1

"STOP" SIGN

DETAIL 6
NO SCALE C-7.1 | C-8.5

JBY# 0622-12

REGISTERED PROFESSIONAL ENGINEER
JONATHAN BERNHARDT
NO. 60229
EXP. 6-30-2012
CIVIL
STATE OF CALIFORNIA

JB YOUNG & ASSOCIATES, LTD
11440 Riverside Drive, Suite M
Lakeside, California 92040
(619) 448-9424
(619) 448-4690 FAX

DATE	SYM	REVISION	BY	A'PD

NATIONAL AERONAUTICS AND SPACE ADMINISTRATION
DRYDEN FLIGHT RESEARCH CENTER
EDWARDS, CA

DRAWING TITLE
CIVIL DETAILS

PROJECT TITLE
8-18-11
FACILITIES SUPPORT CENTER
100% FINAL DESIGN SUBMITTAL

APPROVALS		DATE
Chief, Facilities Engineering & Asset Mgmt. Office DAN CROWLEY		8-18-11
Project Requestor/Customer DAN CROWLEY		8-18-11
Facilities Project Manager GEMMA FLORES		8-18-11
Chief, Office of Protective Services JOHN ZELLMER		8-18-11
Chief - Safety, Health and Environmental Office DAN MULLEN		8-18-11
DFRC Chief Information Officer KEN NORLIN		8-18-11

DATE STRTD	11/04/10	DATE PRNTD	05/23/11
DRAWN BY	JBY	EDM-1703	
SCALE	AS NOTED	TRADE SH. No. C-8.5	SHEET No. 20 of 195
FILE NAME			