NATIONAL AERONAUTICS AND SPACE ADMINISTRATION
GLENN RESEARCH CENTER
21000 BROOKPARK ROAD
CLEVELAND, OHIO 44135

STATEMENT OF WORK

ARCHITECT-ENGINEERING-CONSTRUCTION SERVICES

FOR

RECOVERY - FY09 Replacement of the Refrigeration Plant at Bldg No. 9

PROJECT ID No. 13956

DRAFT

Change Record

Revision	Effective Date	Description
Baseline	9/21/2009	Initial Release
A	9/23/2009	Added 2.07 Reporting
B	10/01/2009	Add Equip Log, Fire Protection; Revised 3.04 and 4.01; Updated misc verbiage
Final	10/14/2009	Final Review Release
Change 1	10/30/2009	Incorporation of Comments

DRAFT

TABLE OF CONTENTS

TITLE	PAGE
PART 1 GENERAL	
1.01 DESCRIPTION	4
1.02 SCOPE	5
1.03 GOVERNMENT FURNISHED INFORMATION	7
1.04 PROCESS AND PROCEDURE	10
PART 2 PRODUCTS	
2.01 DRAWINGS	10
2.02 CONSTRUCTION SPECIFICATIONS	13
2.03 DESIGN AND CONSTRUCTION SCHEDULES	14
2.04 COST ESTIMATES	15
2.05 CONSTRUCTION IMPLEMENTATION PLAN	15
2.06 DESIGN REPORT	16
2.07 REPORTING	16
PART 3 EXECUTION	
3.01 ORDER OF PRECEDENCE	17
3.02 CONFERENCES AND MEETINGS	17
3.03 SUBMITTALS	18
3.04 PROJECT DESIGN REQUIREMENTS	25
PART 4 ATTACHMENTS	
4.01 PROJECT REQUIREMENTS DOCUMENT	
4.02 LIST OF REFERENCED STANDARDS AND ORGANIZATIONS	

DRAFT

PART 1 GENERAL

1.01 DESCRIPTION

This project provides for the replacement of the existing refrigeration plant of GRC Building No. 9 with a new refrigeration plant to be housed in a new building adjacent. The new building shall be known as GRC Building No. 170. The new refrigeration plant system shall include a new wind tunnel heat exchanger and decrease the minimum tunnel operating temperature from minus 25 deg C to minus 40 deg C. The new system includes new, modern chillers, automated controls, and a secondary cooling fluid pumping system.

This project will consist of survey, civil, architectural, structural, mechanical, process and electrical systems adjacent to and/or associated with GRC Building No. 9 and the Icing Research Tunnel (IRT) facility.

This project shall provide all services, labor, materials and equipment necessary for design, demolition, construction, incorporation of sub-systems within the IRT and support facilities, systems checkout and testing, installation of equipment for the Refrigeration Plant and Wind Tunnel Heat Exchanger. New systems and equipment shall interface with portions of the existing mechanical, electrical and control systems within the IRT, Building No. 9 and/or associated facilities.

A. This Statement of Work describes the nature and extent of the Architect, Engineering and Construction (A/E/C) Contractor services required for the following project located at the National Aeronautics and Space Administration, Glenn Research Center, 21000 Brookpark Road, Cleveland, Ohio 44135.

Design and Construction for:

FY09 Replacement of the Refrigeration Plant at GRC Building No. 9
Total Budget: $ 14,500,000

B. This project shall be designed in such a manner that the total estimated cost of design and construction shall not exceed the amount specified above. Work estimated above $ 14,500,000 shall be included as Options developed as design proceeds but prior to construction. If at any time during the performance of this contract it becomes apparent that the project criteria cannot be achieved within the overall not to exceed cost, the A/E/C Contractor shall immediately notify the Contracting Officer's Technical Representative (COTR) and recommend value engineering modifications to bring the estimated cost within the amount specified.

C. This project is wholly funded under the American Recovery and Reinvestment Act (ARRA) of 2009 and as such is subject to all requirements imposed by the legislation and as incorporated by contract. These requirements are mandatory and are subject to monitoring and auditing by the Government throughout the contract performance period.

1.02 SCOPE

A. The A/E/C services for the Design and Construction shall result in the design drawings, specifications for products including equipment, installation and facility activation for the project. The design drawings and specifications shall be complete in all aspects and shall comply with the standards of practice including the Project Design Requirements in accordance with Part 3, Paragraph 3.03. They shall be concise and complete to the point of enabling the construction work to be executed with the understanding of all deliverables to the project and NASA.

1. The design development is an evolutionary process in that, as the design progresses and details develop, there will, of necessity, be deviations from the design guidelines established by this and related documents. These deviations are considered to be in the scope of work of the contract, unless there is a major change in the fundamental concept of the project. The COTR will determine the significance of any deviation. The A/E/C Contractor shall not proceed with any deviation from the design guidelines established by this and related documents without the approval of the COTR. The A/E/C Contractor shall promptly notify the COTR of any instructions by the Government which, in the opinion of the A/E/C Contractor, are not within the established guidelines, and shall not proceed on those instructions until so directed by the COTR.

   The design and construction execution as envisioned by the Government occurs concurrently as illustrated in Figure 1-1 below:

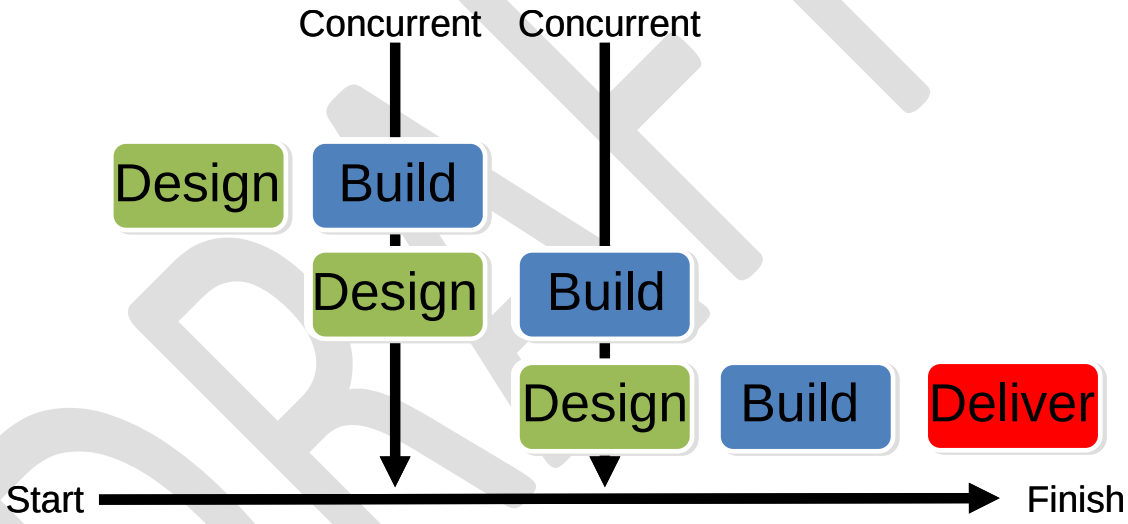

Figure 1-1: Project as a Design / Build Procurement

2. The A/E/C services required under this contract for the Design, Construction and Facility Activation shall include, but are not necessarily limited to, the following:

   a. Field visits and investigations as necessary to become familiar with and to verify the general site and existing conditions. These field investigations shall include soil borings which will allow the A/E/C Contractor to determine disposition of soils generated by utility modification(s), building structures and general site work. Geotechnical soil borings shall also to be included to determine soil conditions, recommend structural requirements, and pavement recommendation. In addition, the A/E/C Contractor shall incorporate Environmental survey results performed into the design documents and accounted for during construction. The A/E/C Contractor shall provide designs that meet the design criteria at the lowest practical cost within the limitations specified in Part 1, Paragraph 1.01A.

   b. Design shall result in construction drawings, specifications, documents, and estimates of cost.

DRAFT

c. Provide design development calculations for all features of work. These calculations shall be stamped by those professionals responsible for the design, checked and initialed off by quality control, and consistent with the Design Report format. They shall be updated and submitted as the design progresses and/or as field changes occur.

d. Preparation of design drawings (and/or updating existing drawings) diagrams, and technical specifications to meet requirements set forth herein. As applicable, these shall include at a minimum survey control, civil, architectural, mechanical, piping & instrumentation diagrams (P&ID), process, electrical, control input/output (I/O), environmental, traffic control, and structural. These drawings and specifications shall be stamped by those professionals responsible for the design, checked for quality and initialed off by quality control.

e. Coordinate design reviews and construction activities with the NASA Project Team.

f. Provide the following for the design and construction project:

1. Construction *Specifications*.

2. Design and Construction *Schedule.*

3. Design and Construction *Cost Estimate*.

4. Design and Construction *Implementation Plan*.

5. Progress *Design Report*s.

6. Construction *Drawings*.

7. An effective Safety, Health, and Environmental Program during design, construction and activation, which assures protection of personnel, Government equipment and facilities, and the environment.

8. Facility Activation and Integrated System Testing

9. As-Built Documentation (e.g. drawings, specifications, O&M manuals)

B. A/E/C services for this project shall comply with the pertinent requirements of the latest edition of the following codes and standards as applicable, which are in effect on the date of issue of the *Contract Award:*

1. OEPA - Ohio Environmental Protection Agency, Office of Water Pollution Control, Storm Water Pollution Prevention Plan (SWP3).

2. AISC, NFPA, OSHA, NEMA, IEEE, NEC, NESC, ASME, ASHRAE, ANSI, ASTM, CMAA, EPA, ODH, IBC, OBC, IPC, IES, ACI, AWS, AASHTO, ODNR and ODOT.

3. ASHRAE/IESNA Standard 90.1; Energy Standard for Buildings Except Low-Rise Residential Buildings.

The A/E/C Contractor shall present a list to the Government with the specific codes and standards selected, in addition to those broadly referenced above, for the design and construction and shall provide design and construction traceability against these selected standards and codes. For a list of the referenced standards and organizations reflected above,

DRAFT

see Attachment 4.02.

C. All original drawings, calculations, reports, specifications and other associated documents are the property of the Government. These documents shall be delivered by the A/E/C Contractor to the COTR upon request at any time during the performance of the contract.

1.03 GOVERNMENT FURNISHED INFORMATION (GFI)

A. The Government will furnish the following material and information as applicable to all project requirements. The Contractor shall comply with and incorporate into the design and construction all the listed materials and information. These documents are incorporated into this document as if fully rewritten. Note that some of the information may be retrieved electronically as represented by the associated web site. Items listed below will be available as requested at, or soon after the initial post-award conference:

1. NASA CAD Standards & General Drawing Practices, including:
http://www.grc.nasa.gov/WWW/Drawfile/Standards/Standards.html

a. FD Drawings Standards Change Notices which are addenda to the above referenced document as if fully rewritten

b. AutoCAD Templates on CD-ROM of the NASA border w/title block and title sheet for all new drawings

c. Template to be used for all Component Sheets (CP Sheets) in Microsoft® Word 2007 format (provided on CD ROM) and an example of a standard NASA Mechanical Piping and Instrumentation Diagram (P&ID)

2. NASA Facilities Drafting and Procedures Standards
http://www.grc.nasa.gov/WWW/Drawfile/Standards/DraftManual2.html

3. NASA Glenn Environmental Programs Manual
http://smad-ext.grc.nasa.gov/shed/pub/epm/epm-manual.pdf

4. NASA Glenn Occupational Health Programs Manual
http://smad-ext.grc.nasa.gov/shed/pub/ohpm/ohpm-manual.pdf

5. NASA Glenn Safety Manual, including:
http://smad-ext.grc.nasa.gov/shed/pub/gsm/chapter_index.shtml

a. NASA GRC High Voltage Electrical Power System Operating Instructions

b. NASA GRC Low Voltage Electrical Power System Operating Instructions

6. NASA Facilities Design Policies and Guidelines, including:

a. NASA Requirements for Ground-Based Pressure Vessels and Pressurized Systems (NASA-STD-8719.17)

b. Standard for Lifting Devices and Equipment (NASA-STD-8719.9)

c. NASA Pressure Systems Office (PSO) Certification Instructions and Checklists

d. Safety Standard for Fire Protection (NASA-STD-8719.11 Revision A)

7. NASA SpecsIntact *Master Index*, including:

a. Division 01 - General Requirements

01 11 00.98	Summary of Work
01 14 00	Work Restrictions
01 20 00	Price and Payment Procedures
01 31 00	Administrative Requirements
01 31 19.98	Project Meetings
01 32 16.00	Design and Construction Progress Documentation
01 33 00	Submittal Procedures
01 35 46.98	General Safety Requirements
01 35 43.98	Environmental Protection Procedures
01 42 00	Sources for Reference Publications
01 45 00.98	Quality Control
01 50 00.98	Temporary Facilities and Controls
01 57 23.98	Temporary Storm Water Pollution Control
01 60 00.98	Product Requirements
01 74 19	Construction and Demolition Waste Management
01 75 00.98	Starting and Adjusting
01 78 00.98	Closeout Submittals
01 78 23	Operations and Maintenance Data

b. Division 02 – Existing Conditions

02 61 00.98	Removal and Disposal of Contaminated Soils

Note that Section 02 61 00.98 will be revised and then reissued by the Government based on the outcome of environmental sampling data and results.

The Division specifications indicated above are released as Government "approved" contract documents and are incorporated in their entirety as written and provided.

8. Typical Progress Design Report for reference purposes.

9. Existing Site Condition and Environmental Data

a. A complete Asbestos Containing Building Material (ACBM) survey was conducted for Building No. 9 and 11. Some floor coverings, pipe and fitting insulations, duct insulation, and ceiling plasters tested positive for asbestos content. Please reference the Facilities Asbestos Site Survey (FASS) for the indicated buildings with more detailed information.

b. Lead based paint products will be encountered during the course of the project. The Contractor shall assume lead based paint is present unless determined otherwise and comply with all applicable regulations including the NASA Glenn Occupational Health Programs Manual during the performance of subject work for this project.

c. An Area of Concern (AOC) does exist at the proposed building location for the soils. This area was a portion of the former test facility known as the Altitude Wind Tunnel (AWT). The AOC has been declared as Solid Waste by the Government and encompasses the entire proposed project site area. The

DRAFT

Government shall provide the delineation on the total depth of the solid waste to the Contractor during design and prior to excavation operations.

d. Existing benchmark, geotechnical and facility drawings for the proposed site and existing buildings is provided by the Government as for information only and reference purposes. This does not relieve the Contractor from providing their own survey, geotechnical and verification of the reference information.

1.04 PROCESS AND PROCEDURE

A. Request for Information

1. The NASA Request for Information (RFI) process is a communication tool between the Government and the Contractor (and/or other stakeholders) to facilitate the flow of information, project direction, change requests for design and construction, clarifications, interpretations, other miscellaneous issues and their respective resolutions. The Contractor shall use the RFI process in their conveyance of project issues to the Government for resolution prior to the execution of any subject work. NASA Form C-9c shall be provided to the Contractor for use and submission with the NASA RFI process. An issuance of a RFI does not automatically imply a cause for a Government approved change proposal.

B. Project Change Proposal Process

1. Change can and will occur on any project. Changes to the proposal, approved plans or specifications include revisions, deletions, additions, and substitutions to the work prescribed on the Government approved project plans or specifications. Therefore, the change proposal process, in conjunction with subject RFIs established between the Government and the Contractor, shall support the negotiations and contract modifications required to adjust costs and/or schedules for the project.

   RFIs resulting in requested change proposals sponsored by either the Government or the Contractor (and their team) shall include the following information as applicable:

   a. A reason for the sponsored change.
   b. Calculations, product cut-sheets, cost estimates, technical justifications, and other back-up information necessary to demonstrate the changes shall be submitted.
   c. The designer of record (DOR) related to the change shall professionally stamp and sign all documents presented. Note that all drawings must be stamped and signed; all sketches must be signed.
   d. Cross-reference and label all supplied documents to the subject RFI.

   Construction changes resulting from design errors and omissions shall be the responsibility of the Contractor and shall be documented with the NASA RFI process.

C. Contractor Change Process Transparency

1. The Contractor shall supply to the Government a copy of their internal communications (e.g. RFIs) between the Contractor and their team of designers and constructors in the conveyance of information similar in content to the NASA RFI and Change Proposal processes. These Contractor RFIs shall be submitted to the Government and marked as “For Information Only” when the Contractor’s resolution on the subject item has occurred.

D. Facility Change Requests

1. The NASA Facility Change Request (FCR) is the process by which the existing GRC systems are authorized for changes by the GRC System Manager for engineering and configuration control purposes. The Contractor shall utilize NASA Form C-29 and its associated instructions to facilitate the approval of systems to be modified for this project prior to the execution of the subject work.

E. Equipment Logging Process

1. The NASA equipment recording process is the development of a list of demolished, modified, and new mechanical equipment for the GRC maintenance program. The Contractor shall utilize NASA Form C-134 (CMMS Request For Modification) and its associated instructions to record all applicable equipment on this project.

F. Permits and Area Clearance

1. The Contractor shall be responsible to obtain all permits and coordinate approvals through the NASA Project Team. Permits shall be managed as indicated in Division 01, Section 01 11 00.98 *Summary of Work* and the NASA Glenn Safety Manual prior to the execution of the subject work.

2. For permits external to NASA (e.g. OEPA Notice of Intent, Asbestos removal), the Contractor shall provide the appropriate documentation, fund the permitted activities and obtain the permit approval prior to field operations.

3. An Area Clearance (AC) is similar in nature to the other required safety permits in that the established process informs the subject system stakeholders, with signatories for those responsible from the project and systems, that their system will be affected by the project and for a defined duration. The AC shall be required to be routed two (2) weeks prior to the subject work. The AC approvals shall be coordinated between the NASA Project Team and the Contractor prior to the subject field work.

4. Road closures shall require a two (2) week notification by the Contractor to the NASA Project Team prior to the planned activity. Once approved by the Government, the Contractor can then prepare and execute the road closure activities.

G. Government Inspections for Quality Assurance and Safety

1. NASA, during the course of this project, will be providing its own team of Quality Assurance Technicians, Engineers and Inspectors to represent the interests of the Government. This action does not relieve the Contractor from providing its own team for Safety, Quality Assurance and Quality Control. The Contractor shall make all areas of the overall project available daily to the NASA Project Team and designees during normal business hours, extended/off hours and by request. All contract documents shall be made available to the NASA Project Team members in the on-site project office at all times. The NASA Project Team or designees will provide a representative(s) for all Government witnessing on project elements such as but not limited to site safety, factory acceptance testing, third party tests, soil proctors, material and equipment installations, pressure testing, equipment activation, etc. The Contractor shall not cover or otherwise obscure any project work prior to the witnessing of the Government. Full coordination and cooperation between the NASA Project Team and Contractor team is required for Government inspections.

DRAFT

PART 2 PRODUCTS

2.01 DRAWINGS

A. All contract drawings, shall be made using AutoCAD, Release 2008, on D size drawing sheets bearing NASA title blocks and be set up according to the Glenn Mapping System (GMS) and the NASA GRC AutoCAD drafting standards, including layering. Layering convention shall be in accordance with the United States National Cad Standard and NASA drafting procedures. Drafting standards shall be in accordance with the referenced documents in Part 1, Paragraph 1.03 and the items listed below:

1. All drawings for new work shall be in English (I-P) Standard units.

2. An area approximately 5-1/2 inches wide by the height of the sheet shall be reserved on the right side of each sheet for general notes. An area 6 inches high above the Government title block shall be left empty to document future drawing revisions.

3. All lettering shall be of such size and intensity that it shall be clearly legible and professional in appearance. Lettering must be readable on 50% reduced-size drawings. Minimum letter size shall be 3/32 inch in height, vertical in character and block-type in form. Stick-on lettering shall not be used.

4. A NASA north directional symbol and graphic scale, no larger than 1”=30’, shall be provided on all plan drawings. Drawings with elevations, sections or details shall have graphic scales. All elevations shall be reflected as per the United States Geological Survey (USGS) and shall be utilized on the drawings. NASA GRC has an established coordinate grid system that shall be incorporated on the contract drawings.

5. The Contractor may make limited use of site-specific photographs if needed to help expedite any selective demolition and provide a comprehensive picture of the work.

6. All drawings shall be accurately cross-referenced between plans and sections, disciplines and to the cover sheet.

7. Demolition and new construction shall not be shown on the same drawing. Disciplines shall not be mixed on a drawing unless approved by the COTR.

8. All original drawings shall become the property of the Government and shall be delivered to the COTR.

9. All drawings (with the exception of any three-dimensional models) shall be on D-size templates bearing NASA GRC title blocks (templates shall be furnished by the Government). Native AutoCAD files for each design review submittal (Preliminary, Systems, Activation and Final) shall be submitted on CD ROM(s).

10. The Contractor shall provide a D-size cover sheet for the project. The cover sheet shall indicate the project title and fiscal year, the project location (shown on a scaled plot plan with the work area circled), and a listing of drawings included in the project. The drawings following the cover sheet shall be organized according to work discipline in the following order: Survey, Civil, Architectural, Structural, Mechanical, Process and Electrical. For each discipline, demolition work shall be shown first, followed by drawings depicting “new” work.

DRAFT

D. The firm name and registration stamp of the A/E/C Contractor shall be placed on drawing sheets adjacent to the Government title block by the A/E/C Contractor. All contract drawings shall be sealed / stamped by architects, surveyors and engineers professionally registered in their home state and for work in the indicated discipline.

E. The Contractor shall use the referenced NASA CAD Standards & General Drawing Practices with all Change Notices for the identification and numbering of the drawings. Once the drawing numbering scheme has been applied to the drawings, any changes to the established scheme is considered to be under configuration control and shall not be unilaterally altered without the approval of the Government.

F. A "shop drawing" as defined for this project is a drawing or set of drawings produced by the contractor, supplier, manufacturer, subcontractor, or fabricator to facilitate the contract work with the appropriate connections, fabrications, layouts and product specifics. This type of drawing shall be provided to the COTR as called for in the project specifications or this document.

G. A "coordination drawing" as defined for this project is a drawing or set of drawings produced by the contractor critical to the management of the installation and shop drawings of the trades (e.g. steel work, sheet metal ductwork, piping, plumbing, fire protection, electrical, etc.). This type of drawing shall be provided to the COTR as required to execute the project, clarify items supplied and to reduce or best eliminate rework, errors and omissions.

H. An "as-built" as defined for this project is a drawing or set of drawings submitted by the Contractor to the COTR prior to project final payment and no more than sixty (60) calendar days after project Final Acceptance. The as-built documents shall reflect the exact features, dimensions, geometry, and location of all elements of the work completed under the contract. The as-built documents shall be submitted as black-lined final versions to the COTR for review, acceptance and configuration control.

I. Discipline Specific Drawing Information

Architectural / Survey / Civil / Structural

The following is a minimum list of architectural/civil/structural drawings required for this project:

a. Plans, sections, profiles and details for survey control, existing conditions, site/layout, demolition, grading, SWP3 and utilities.
b. Plans and sections of the new facilities and any modifications to existing facilities.
c. Plans, sections, and details for all equipment foundations and equipment support structures, both interior and exterior
d. Plans, sections, and details for all specially designed supports and anchors for piping and equipment. Details shall include all attachment requirements to existing structures.
e. Sections and details for architectural new work and changes including existing wall, roof, foundation and other structural modifications.

Mechanical / Process

All mechanical piping drawing notes shall indicate the piping design criteria, the piping materials, and the pressure testing requirements for all piping systems shown on the drawing similar to the example provided in Part 1, Paragraph 1.03.

Piping and Instrumentation Drawings (P&IDs) shall show fluid flow from left to right. P&IDs shall

be formatted according to the references presented in Part 1, Paragraph 1.03 and as a minimum by the Instrumentation Society of America (ISA). Settings for components, alarms, shutdown settings, and PLC I/O channel assignments shall be shown on all system P&IDs.

Detailed component sheets (CP Sheets) shall accompany each P&ID drawing. CP sheets shall be 8-1/2 inch by 11 inch tables that provide information on each component identified on the P&ID.

The following is a minimum list of mechanical drawings required for the project:

a. P&IDs for all process and institutional systems
b. Piping plans, sections, details and schematics. The drawing notes shall include information on the maximum allowable working pressure, the fluid operating temperature, the fluid flow rate range, and all information necessary to perform a hydrostatic (or if required, pneumatic) pressure test of the piping system.
c. HVAC plans, section, details, air & water flow schematics, equipment schedules, and controls diagrams for all operable equipment including Sequence of Operations
d. Assembly and detail drawings reflecting the appropriate features of work.
e. Plumbing plans, isometrics, sections, details and equipment schedules.

Fire Protection

The following is a minimum list of fire protection drawings required for this project:

a. Plans, sections, details, schematics and design criteria of all fire protection equipment and devices associated with the system for the new facilities and any modifications to existing facilities
b. Plans, sections, details and schematics of the fire protection detection and control systems for the new facilities and any modifications to existing facilities.

Electrical / Instrumentation & Controls

The following is a minimum list of electrical drawings required for the project:

a. Plan - Control Drawings including cable and conduit schedules.
b. Plan - Instrumentation Drawings.
c. Plan – Equipment Layout and Power Conduit Routing including high voltage cable termination details.
d. Control flow chart.
e. Valve actuator / positioner controls elementary and control diagrams.
f. Valve installation and connection diagrams.
g. Instrumentation elementary and interconnection diagrams.
h. PLC installation and interconnection.
i. PLC I/O elementary diagrams.
j. PLC I/O drop cabinet and layout drawings. Digital and Analog wiring shall be separated.
k. High and Low voltage one-line and three-line diagrams.
l. Terminal strip cabinet connection diagrams.
m. Protective relay installation and connection diagrams.
n. Ventilation system power.
o. Ventilation control, interlocks and interconnection.
p. Facility instrumentation, control elementary and interconnection diagrams.
q. Safety Shutdown, Emergency Stop and Alarm hardwire control diagrams.
r. Plan – grounding (e.g. building, instrumentation and lightning protection)

s. Plan – lighting with the incorporation of photometric analysis
t. Ductbank and manhole layouts for High Voltage and Communications cables

2.02 CONSTRUCTION SPECIFICATIONS

A. Specifications shall be prepared according to the C.S.I. 50 Division three-part 2004 format, established by the Construction Specification Institute. The A/E/C Contractor shall use NASA's Automated Standard Construction Specification System. NASA's automated specification is called "SpecsIntact".

B. The A/E/C Contractor shall prepare construction specifications that shall consist of the technical requirements. Provided the A/E/C Contractor agrees, NASA will install SpecsIntact software onto the A/E/C Contractor's computer system to enable electronic preparation.

C. The A/E/C Contractor shall incorporate all NASA GRC Specification sections that are applicable. In the case of those sections identified in the NASA GRC master index as "Local," the Contractor shall utilize this section in lieu of the standard section. The GRC "Local" specification is a defined section conforming to NASA GRC Facilities expectations and application to the subject work. The Government may supply, upon request, copies of typical specifications to the A/E/C Contractor that shall be used as a reference guide.

D. Construction specifications shall conform to the requirements in Part 10 of the Federal Acquisition Regulation (FAR). When "brand name" descriptions are necessary, specifications must clearly identify and describe the particular physical, functional, or other characteristics of the brand name items, which are considered essential to satisfying the requirement. On drawings with "brand names," the following note shall be put on each drawing in, or adjacent to, the General Notes column: "Equipment listed on this drawing by manufacturer's name is to denote the quality and salient features for equal products."

E. The construction specifications shall be produced by the A/E/C Contractor in the following manner:

1. The A/E/C Contractor will be furnished with a complete listing of the master text and index.

2. The A/E/C Contractor will be furnished with a "SPECSINTACT User's Guide".

3. The A/E/C Contractor will be responsible for editing and selecting applicable sections of the master text by deleting inappropriate text and adding new text as required.

4. Where the SpecsIntact specifications are not modifiable to the project requirements, the A/E/C Contractor shall prepare complete, applicable specifications in the same format and nonproprietary level of detail as the SpecsIntact specifications, to completely describe the technical requirements, salient features, and minimum quality level and performance requirements of the equipment and/or installation being specified.

5. Upon completion of editing and modification of the SPECSINTACT sections by the A/E/C Contractor, they shall be returned to the Government for review and approval by the COTR and then the released for construction specifications shall be implemented during the project's construction. Once approved by the Government, the contract specifications become configuration controlled items that will not unilaterally be modified. Any proposed deviations shall follow the Request for Information (RFI) process and shall be resolved by both the Contractor and the Government prior to execution.

F. The results of detailed site characterization and/or other environmental studies shall be included

as an Appendix to the specifications and shall be referenced in the environmental specification sections.

G. The Contractor may desire to review content on the Whole Building Design Guide (WBDG) website (http://www.wbdg.org) regarding the Unified Facilities Guide Specifications (UFGS).

2.03 DESIGN AND CONSTRUCTION SCHEDULES

A. The A/E/C Contractor shall prepare a detailed design and construction schedule (use of Microsoft® Project 2007 is preferred) for this project indicating engineering, procurement, fabrication, demolition, and installation and as described in Division 01, Section 01 32 16 *Design and Construction Progress Documentation*. The schedule shall include a graphic schedule (Gantt chart) indicating sequence of events and interrelationships using the critical path method (CPM). Overtime and/or off-normal hours shall be indicated in the schedule and in the specifications. The schedule shall be updated and submitted to the Government reflecting work progress (planned and/or performed) during the execution of this project.

2.04 COST ESTIMATES

A. The A/E/C Contractor shall provide a detailed construction cost estimate on a per unit basis, with the submittals, as required in Part 3.02 B, showing both labor and material breakdown. The cost estimate form shall be similar to NASA Form C-489. Material and labor extensions shall be totaled. Supervision, overhead, profit, and insurance markups shall then be added. The cost of this project shall be limited to that amount specified for the project in accordance with Part 1.01 A. All site work shall be based upon a summary of work indicating specification number (SPECSINTACT), description, unit of measurement, quantity, plan sheet number, unit cost, subtotal, and total cost. The *cost estimate* form shall be prepared using a Microsoft® Excel 2007 spreadsheet and be included in the Progress Design Report.

2.05 DESIGN AND CONSTRUCTION IMPLEMENTATION PLAN

A. The A/E/C Contractor shall prepare a comprehensive *Design and Construction Implementation Plan* which shall include, but need not be limited to, the following outline items:

1. Project description.

2. Design and Construction periods.

3. Personnel impact.

4. Utilities impact.

5. Research impact.

6. Other conditions or hazards.

7. Safety review.

8. Personnel contacted.

9. Required permits and forms.

10. Security requirements.

11. Special considerations, e.g. soil sampling, notifying building occupants.

12. Off-hour work.

13. Equipment relocation/delivery.

14. Parking/circulation impact.

15. Road, Parking Area, and Walk Closure Plans.

16. Traffic and Pedestrian Detour Plans.

17. Contractor's Quality Control and Configuration Management Plans

B. The *Design and Construction Implementation Plan* shall be included in the Progress Design Report and be clearly identified in contractual documents (SPECSINTACT and drawings).

2.06 DESIGN REPORTS

A. Progress Level Design Reports

The Contractor shall produce design review materials for review and approval by NASA.

1. The Progress Design Report shall have the following format:

a. Index

b. Scope of the project, including repair, rehabilitation, removal, and replacement.

c. System descriptions and basis of design per discipline including material specifications and catalog cuts.

d. Calculations.

e. Initial and Updated Construction Cost Estimate.

f. Environmental study/assessment/sampling data and results.

g. Initial and Updated Design and Construction Schedule

h. Appendices (special studies, back-up data, additional calculations, manuals, manufacturers' specifications, catalog cuts, etc.)

i. The *Design Report* shall be assembled into a hard cover binder with 8-1/2 inch by 11 inch pages. Three (3) printed copies and one (1) CD shall be furnished.

2.07 REPORTING

Weekly Project Meetings

The Contractor shall attend weekly project meetings scheduled by the Government. Subcontractor representatives shall attend.

The Contractor shall prepare a Two-Week Planning Schedule for discussion at each weekly project meeting, highlighting design & construction progress, utility outages, material deliveries, subcontractor's onsite, equipment onsite, coordination issues and updates to the baseline schedule. Meeting minutes shall be kept by the NASA Quality Assurance Specialist and distributed after signed concurrence by the COTR and the Contractor.

Monthly Progress Reporting

The Contractor shall provide a monthly progress report at the scheduled release of a payment invoice of each month after the Contract Award. The monthly project progress report shall include the name of the project, name of the Contractor(s), date of the report, reporting period and a brief project description.

The Monthly Progress Report shall cover five specific areas as listed below:

a. A description of technical progress and accomplishments, problems encountered and planned solutions for the existing reporting period and progress planned for the next period.

b. An updated copy of the Gantt chart schedule showing progress against plan with the critical path identified.

c. An updated cost report showing actual costs for the reporting period, cumulative costs, budgeted costs, and projected costs.

d. A discussion of Administration, Project Management or ARRA items which are pertinent to the reporting period.

e. A summary of safety related issues pertinent to the reporting period and task as a whole: mishap reports, hazardous materials or confined space work performed / documentation prepared or required, identification of upcoming work that needs safety preparation, etc.

PART 3 EXECUTION

3.01 ORDER OF PRECEDENCE

The project has established an Order of Precedence for the various contractual documents and their roles in resolving requirement issues. Any inconsistency in this document, solicitation or contract shall be resolved by giving precedence in the following order:

a. Government Request for Proposal
b. Contractor Proposal
c. Government Contract and Contract Modifications
d. Project Specifications
e. Project Drawings
f. Project Submittals

For instances where project specification section to project specification section differ, the more rigorous requirement(s) shall apply unless the lesser requirement is accepted by the NASA Project Team based on the Contractor's issued documentation of the value to the Government

(e.g. lower cost, technical justification, etc.).

3.02 CONFERENCES AND MEETINGS

A. After the award of this contract and prior to beginning of the design activity, an initial conference (Post Award Meeting) between the A/E/C Contractor project team and the NASA project team, will take place at the NASA Glenn Research Center. The NASA Project Manager shall organize the session and/or sessions and coordinate with the Contractor for attendance.

The Government has the following desired outcomes with the Post Award Meeting:

1. Interaction between the Contractor and all client representatives with the NASA Project Team.

2. Presentation of the Contract and Contractor's Proposal to all project team members.

3. Achieve consensus from the NASA Project Team on any issues and concerns with the Contractor's Technical Proposal and the End User's (i.e. IRT) functional requirements. Confirm that the design is within the project budget.

4. Establish and explain policies and procedures for the completion of a successful project.

5. Establish clear lines of communication and points of contact (POCs) for Government and Contractor team members.

6. Obtain an acceptable conceptual design including floor and site plans. These documents shall be signed by the CO / COTR, the Contractor and other key team members.

7. Establish the project design schedule, design submittal packaging and preliminary construction schedule. All items shall be in accordance with the appropriate Division 01 Specification Sections provided. Discuss design milestones and events that will be included in the Quality Control Plan.

8. Establish clear expectations for facility turnover from the Contractor to the Government.

B. Scheduled project conferences for progress level design reviews and construction progress will be held at Glenn Research Center. Scheduled project meetings shall include but are not limited to the information described in Division 01, Section 01 31 19.98 *Project Meetings* and other sections of this document such as Part 2, Section 2.07 and Part 3, Section 3.03 B 8.

C. Other meetings and electronic communications between the A/E/C Contractor's representatives and the NASA project team shall take place to assure complete communications and agreement of ideas and expectations to achieve the final objectives. The Government shall establish an on-line shared folder website, known as eRoom - IRT Refrigeration Upgrade, to be accessible by designated NASA and Contractor project personnel. The files contained therein shall be in Adobe® PDF or Autodesk® DWF format where practical so as to aid in dialogue but prohibit unauthorized revisions.

D. The A/E/C Contractor shall be responsible for taking notes at all conferences and meetings except as indicated in Division 01, Section 01 31 19.98. Notes of conferences and meetings shall be submitted within five (5) working days of the occurrence. The A/E/C Contractor shall acknowledge, in the conference notes, transmittal of any material between parties, submit copies of any correspondence pertinent to the execution of the contract, and provide a brief

statement of job progress. The above information shall be transmitted to the COTR via e-mail (ATTN: Jeffrey.A.Chambers@nasa.gov) for forwarding to the NASA project team as required. If the NASA project team has any comments concerning the notes, they will so advise the A/E/C Contractor within five (5) working days of receipt of the notes, and these comments shall be included at the beginning of the next scheduled set of notes. Pertinent items in telephone conversations between the A/E/C Contractor's representatives and NASA Project Team shall be discussed, noted and included at the beginning of the next scheduled set of notes as applicable.

E. Upon completion of the project or when requested by the COTR, the A/E/C Contractor shall return all Government-furnished material, including drawings, sketches, and documents listed in Part 1, Paragraph 1.03 to the COTR.

3.03 SUBMITTALS

A. General Requirements

1. The A/E/C Contractor shall transmit to the NASA COTR or appointed designee for review and approval submittals of the various contract documents as described in Part 2, Products, of this Statement of Work and the Project Specifications together with Division 01, Section 01 33 00 *Submittal Procedures*. Also, to be submitted is a Design and Construction Schedule, as called for in Part 2.03 A, which shall show all project submittals, which include both design and construction phases, and their calendar dates.

2. All drawings, disks, and other documents submitted by the A/E/C for approval along with accompanying transmittal letters shall be sent directly to:

National Aeronautics and Space Administration
John H. Glenn Research Center
Attn: Jeffrey Chambers (COTR)
Facilities Division, M.S. 21-15
21000 Brookpark Road
Cleveland, OH 44135

3. Correspondence other than submittals shall be forwarded in quadruplicate to the COTR with the NASA contract number marked on each transmittal.

4. Ten days prior to each progress level meeting, the A/E/C Contractor shall submit one (1) complete set of full-size drawings and three (3) complete sets of half-size drawings, cost estimates, and construction schedules; three (3) complete sets of design calculations and back-up data; and edited SpecsIntact specification sections. The A/E/C Contractor shall correct the deficiencies and resubmit at the same progress level until the submittal is approved. Approval of the design progress submittal is not to be construed as approval or issuance for construction (IFC). Those IFC submittals are to be processed through the established submittal procedures.

5. Each submittal will be reviewed by the NASA project team with approval and/or comments and shall be returned to the A/E/C Contractor at the corresponding progress level meeting scheduled or product issue within ten (10) working days after receipt. All changes will be reviewed and acknowledged for incorporation into the design and construction.

6. Other changes that may evolve at the review meetings will be resolved and incorporated, or the decisions regarding them will be forwarded by NASA to the A/E/C Contractor within five (5) working days for inclusion in the remaining design engineering work.

7. All NASA comments are to be included unless specifically excepted by the A/E/C Contractor in writing and with acknowledgement by the Government. The Government shall have the final decision authority on incorporating changes even if they bear cost and schedule implications for which the Government is ready to bear that cost and/or delay.

B. Project Deliverables

1. Specific provisions for the design and construction of this project are detailed in Part 3.04, Project Design Requirements.

2. Contract Schedule of Values

The Contractor shall prepare and submit for approval a Schedule of Values to the COTR and as described in Division 01, Section 01 20 00 *Price and Payment Procedures*. Each project element shall be separately decomposed according to the Work Breakdown Structure (WBS). The Schedule of Values shall include the following: Items under each milestone, Unit Quantity, Unit of Measure, Total Cost (Labor), Total Cost (Material) and Total Item Cost. Shipping costs shall be added to the total material cost. Supervision, overhead, profit, and bond shall be added to the compiled costs. The Schedule of Values shall be based on AIA Document G702 and G703 or other NASA approved form.

3. Health & Safety

NASA policy requires that Contractors submit site specific safety and health plans (SSHASPs) as part of the contract and as described in Division 01, Section 01 35 26.98 *General Safety Requirements*.

The plan will demonstrate the seriousness of the Contractor's intent to excel in its implementation of its safety and health program as an early indicator of its safety culture. The requirements of the plan's content emulate the elements of OSHA's Voluntary Protection Program and as such represent all the elements of a successful safety and health program. The Contractor shall update the plan at a minimum quarterly and submit to NASA for acceptance prior to any field implementation. The Contractor may update the plan at any time or at the direction of the Government. Revisions are subject to Government review and approval prior to the execution of any subject field operations.

In addition, the Contractor shall provide maintainability, sustainability, constructability, operability and "safety by design" for all elements of the project. "Safety by Design" is the concept that encourages construction and/or designers to "design out" health and safety risks during design development. The concept supports the view that along with quality, schedule and cost; safety is determined during the design phase. Another facet of the Safety by Design concept is the utilization of hazards analysis. The Contractor shall provide the means to implement, document and report on any facility hazard analyses (FHAs) that will be produced for this project.

DRAFT

4. Quality Assurance / Quality Control (QA/QC) Plan

The Contractor shall prepare, and submit for Government approval, a Quality Assurance and Control Plan including requirements from Division 01, Section 01 45 00.98 *Quality Control*. This document will define the Contractor's plan to apply relevant assurance principles and techniques to ensure the project will be successfully accomplished and the applicable contract requirements and specifications will be satisfied.

The Contractor's quality system shall be AS9100 or ISO 9001 certified.

The plan shall identify all elements of the quality assurance organization, and describe the objectives, implementation policies and procedures, and configuration control systems utilized throughout design, development, fabrication, delivery, and commissioning to provide quality products and materials.

5. Project Operational Documentation

The Contractor shall prepare and submit to the Government documentation as detailed in Division 01, Sections 01 70 00.98 *Closeout Submittals* and 01 78 23 *Operations and Maintenance Data* which includes the following system documentation:

a. As-built Drawings
b. Operation manuals
c. Maintenance manuals
d. Software programming details and instructions
e. Equipment list with nameplate data and location.

Working versions of these documents shall be made available to the Government during the Activation phase of the systems.

6. Personnel Training on Installations

The Contractor shall provide comprehensive training on the Refrigeration Plant and Wind Tunnel Heat Exchanger systems, equipment, hardware and software for the Government's personnel and representatives in the operation, configuration, and maintenance of the systems. The training shall include all manuals and materials required.

The training shall be conducted by those directly experienced with the supplied equipment and be of sufficient depth that the trainees will be qualified to operate, maintain, troubleshoot, and train future operators in the systems furnished under this project.

Training duration shall be as per the approved project specification for each subject facility system.

7. Project Closeout

The minimum requirements for closeout documentation and implementation shall be as indicated in Division 01, Section 01 78 00 *Closeout Submittal.*

A Final Acceptance Punchlist (FAP) shall be used by the Contractor and NASA to manage the reception of the project facilities and systems. The Government shall be responsible to develop the punchlist during the course of the project, including any stakeholder sponsored items. The Contractor shall facilitate the execution of the complete

list to the satisfaction of the Government prior to final payment.

FAP sessions shall start a minimum of ninety (90) days prior to project completion and shall be weekly meetings and/or walkthroughs to detail the status of the items documented.

The Schedule of Values shall include specific line items for the acceptance and payment of the specification and/or designated closeout responsibilities and documentation.

The Contractor shall be responsible for the proper installation of the design and construction requirements as specified. Preliminary and Final Acceptance testing shall be performed by the Contractor as a part of the QC program throughout the installation process and immediately thereafter to verify that the installation is acceptable and to establish the required baselines. Not until this is complete will the equipment or facility be accepted by NASA for turnover.

Final Acceptance of the project as defined by NASA will occur after the Contractor has provided to the COTR all project related final documentation and drawings for startup, commissioning, and testing and receives notification of its review and concurrence from the Government. Completed elements such as the validation and verification of systems including the wind tunnel performance requirements are part of the criteria required for Final Acceptance.

8. Progress Levels during Design and Construction

Progress level meetings shall be held at NASA at which time the A/E/C shall provide the design status and submittals by presenting the information contained in the proposed level of the Progress Level Design Report (refer to paragraph 2.06 herein). The Contractor shall coordinate the session with the Government jointly to facilitate the attendance and participation of any and all stakeholders.

The minimum requirements for design submittals at each progress level are as follows:

a. For the Preliminary Progress Level :

1. At minimum, this submission shall include items such as system types with supporting calculations such as HVAC, plumbing and circuit load requirements, voltage levels and lighting calculations, consideration of inter discipline coordination of equipment sizing and mountings, preliminary one-line diagrams, preliminary utilities riser diagrams, sketches and code analysis. The A/E/C shall be prepared to discuss the drawing package in terms of quantity of drawings along with contents thereof.

a. Calculations and description of the design approach.
b. Existing site conditions, topography, utility services including size, type, grade and elevations of underground utilities, and survey controls. Verification of these parameters will be required by the Contractor.
c. Preliminary Site Layout, Demolition, Utility (with sizes/inverts), Grading and SWP3 Plans
d. Hardware cut sheets for the major equipment items.
e. System functional block diagrams.
f. Control diagrams.
g. Building and Equipment layout.
h. Electrical High and Low Voltage one-line diagrams
i. Electrical riser diagrams.

j. Engineering calculations/analysis reports
k. Design, Construction, and Activation Schedule.
l. First issue of the contract drawing set.
m. Lighting calculations, circuit load requirements, and voltage levels.
n. Heat load calculations for HVAC.
o. Plumbing calculations
p. Hydraulic calculations for Fire Protection
q. Facility Hazard Analysis to include a minimum of a one-page hazard analysis for each item on the Preliminary Hazard List that describes the hazard in details specific to the proposed design, identifies what systems or features are proposed that mitigate or eliminate the hazard and what regulatory requirements (OSHA, Ohio Building Code, NFPA Standards, etc..) are relevant, if any.
r. First draft of preliminary hazards list including an outline of the Facility Hazard Analysis report
s. Final 100% Design Report in outline format.
t. Structural, civil, mechanical, and electrical design calculations.
u. Piping and Instrumentation Diagram (P&ID's) and Component Parts (CP) sheets (including current material/component selections)
v. Design drawings in showing any required architectural ceiling plans, sections, elevations, foundations, demolition plan, HVAC equipment, details, piping plans and elevations, power plans, electrical schematics, lighting plans, EMCS hardware and interfaces, fire alarm modifications, and connection diagrams.
w. SpecsIntact Specifications sections for use in the construction of the project.
x. Concept of Operations
y. Wind Tunnel Heat Exchanger Critical Design Review Plan

b. For the Systems Progress Level:

1. The design submittals for the Systems Progress Levels are envisioned to be provided in packages readied for implementation and shall be prior to the construction phase for the subject design elements. This type of Progress Level may be required to be completed as several discipline specific packages. The following systems (in general outline form) are required in the Government's review and release for construction:

a. General Site

i. General project site layout including grading and survey
ii. Demolition
iii. Utilities including modifications and new work

b. Building

i. Building structure, appearance and layout including space allocations
ii. Building infrastructure (fire protection, HVAC, plumbing, electrical, etc.)

c. Refrigeration Plant

i. Refrigeration Process (cooling water, refrigeration, secondary cooling, electrical, instrumentation, controls, etc.)
ii. Refrigeration Equipment and System Layout
iii. Refrigeration Automation, Controls and Instrumentation

d. IRT and Wind Tunnel Heat Exchanger

i. Wind Tunnel Heat Exchanger (WT-HX) including removal of existing and installation of new
ii. Refrigeration Process related to the WT-HX (secondary cooling, electrical, instrumentation, etc.)
iii. Modifications / restorations to the IRT related to the Heat Exchanger

e. Refrigeration Plant and IRT Integration

i. All programming, logic, interoperability and automation elements
ii. Modifications to existing IRT and Building No. 9 systems

2. The WT-HX shall require a Critical Design Review (CDR) prior to the fabrication of the unit. Schedule this specific review with the NASA Project Team prior to the start of subsystem fabrication and assembly to assure that the design solutions satisfy the performance requirements. The CDR is an established standard reliability engineering practice at NASA. The CDR provides for the assessment of the design and fabrication plans of the Contractor by a group of knowledgeable persons generally not directly involved in the activity being reviewed. After the CDR, the Contractor shall review, acknowledge and incorporate as applicable any comments. The WT-HX shall then follow the submittal process under Government Review in order to be released for fabrication.

3. For each system, engineering shall have been substantially completed and consummate with the design and construction planning. The Government envisions the respective system would achieve a 90% design level as part of the progress submission. Drawing plans and elevations, types of materials, Code and engineering analysis, details and typical drawing sections inclusive of environmental disposition of debris shall be included.

a. Final design drawings showing any required plans, sections, elevations, equipment layouts, foundations, demolition plans, equipment, details, piping plans and elevations, power plans, one line diagrams, electrical schematics including instrumentation and controls, lighting plans, riser diagram, fire protection and alarm, and connection diagrams.
b. The work shall include a review of existing building drawings, determining which are obsolete and should be replaced, and which, if any, can be modified and used for this project.
c. All final versions of specification sections related to the scope of the system presented.
d. All final engineering calculations/analysis reports
e. Identification on the design drawings of critical safety systems that are required for mitigation of hazards included in the Hazard Analysis Tracking Index.
f. Final Catalog cuts for major equipment items.
g. PLC I/O requirements and controls schematics.
h. Final Power and control cable plan, including the developed conduit and cable schedules.
i. Existing and proposed contours, proposed utility locations including size, type, grade, elevations, and utility profiles.
j. System (e.g. mechanical, electrical, etc.) Switchover and Cutover Implementation Plans

4. Draft Final 100% Design Report section for the subject system

5. Updated Facility Hazard Analysis Reports to clearly identify the systems and controls included in the design that mitigate hazards identified in the Hazard Analysis Tracking Index. This document must be coordinated with the systems identified on the final design drawings.

6. Updated Design, Construction, and Activation Schedule.

7. Incorporation of the Preliminary Progress Level Comments and other relevant correspondence

8. Provide a Progress Level Design Report for the subject system(s).

c. For the Activation Progress Level:

1. Completed drawings and specification sections.

2. Provide a Progress Design Report representing all sections and including:

   a. Final engineering calculations/analysis reports
   b. Factory Testing and applicable reports in order to activate equipment
   c. Completed design drawings
   d. Completed Facility Hazard Analysis Report
   e. Final draft of System Validation Plan
   f. Working versions of the Facilities Operations Manuals
   g. Working versions of the Maintenance Manuals
   h. Completed design report

3. Final Design, Construction, and Activation Schedule

4. Incorporation of System Progress Levels Comments and other relevant correspondence

d. For the Final Progress Level:

1. The remaining level of effort of the contract shall provide for corrections and changes to the contract deliverables by the A/E/C following the Activation Progress Level meeting.

   a. Completed As-Built drawings and specifications.
   b. CD-ROMs containing all of the completed native AutoCAD drawings generated for the project. Note all x-refs and blocks shall be bound to their respective drawings such that the drawing can be used as a standalone file without requiring additional and/or supplemental files and programs. Provide both PDF and DWG formats
   c. Three (3) full-size, bound sets of the project drawings
   d. Final Design Report
   e. Two (2) hard copy sets, one (1) set in PDF format on CD of final version of Facilities Operations Manuals
   f. Two (2) hard copy sets, one (1) set in PDF format on CD of final version of Maintenance Manuals

2. Final acceptance of the drawings requires the approval signatures of the project team and GRC Facilities Division management.

9. Record of Existing Conditions

The Contractor shall provide a written record and photographically document all existing site conditions prior to the start of construction. A copy of the record and photos of the existing conditions shall be forwarded to the COTR for concurrence. After concurrence, this record shall be used as a Government reference point for the restoration of any associated areas to pre-project like condition by the Contractor. When additional areas are integrated into the current level of effort during the course of the project, the Contractor shall provide an update to the COTR prior to work in the subject area.

3.04 PROJECT DESIGN REQUIREMENTS

A. Icing Research Tunnel Technical Requirements

1. See Part 4, Attachment 4.01, *Project Requirements Document (PRD)* including its Appendix A for the details of the Icing Research Tunnel Refrigeration Replacement Performance and Control Requirements for the refrigeration plant and heat exchanger system to be designed and constructed.

2. Options

    a. The sixth refrigeration unit as described in Appendix A, Section 1 *Technical Requirements* of the PRD shall be designated as future and shall not be provided unless included by contract modification. The Contractor shall incorporate and include in their system design the sixth unit as if installed. The Contractor shall provide all service connections, power, instrumentation, control points, and operational software necessary such that the Government can install the sixth unit and easily integrate this unit with the installed refrigeration plant system at a later date.

B. Project and Engineering Technical Requirements

1. See Part 4, Attachment 4.01, *Project Requirements Document* including its Appendix B for the details of the project and engineering discipline specific requirements for the refrigeration plant and heat exchanger system to be designed and constructed.

2. Options

    a. The Contractor shall, under this option, provide a written report to the NASA Project Team on the feasibility and costs associated in implementing the project for LEED certification. In addition, the Contractor shall fund, register and support all aspects of this project related to certification and per the USGBC LEED processes and guidelines. Refer to Appendix B, Section A *General* Part 1 regarding the base LEED requirements.

    b. The Contractor shall, under this option, submit a written report to the NASA Project Team of the costs to implement an upgrade to the overhead crane as Class D and/or a five (5) ton auxiliary hoist. The Contractor shall add the following capability to the wireless controller if an Auxiliary Hoist upgrade is approved: Auxiliary Hoist control up/down. Refer to Appendix B, Section F *Structural* Part 5 of the PRD for the base overhead crane.

    c. A full sized stand-by secondary coolant pump, under this option, as indicated in Appendix B, Section G *Mechanical / Process* Part 5e of the PRD shall be future equipment. The Contractor shall incorporate and include in their system design the stand-by unit as if installed. The Contractor shall provide all service connections, power, instrumentation,

control points, and operational software necessary such that the Government can install the redundant unit and easily integrate this unit with the installed refrigeration plant system at a later date.

d. The Intercom/Paging system, under this option, as described in Appendix B, Section J *Communications* Part 3 of the PRD shall be an expanded installation of the detailed functional system including one (1) additional station in the Refrigeration Plant Control Room and four (4) additional stations evenly spaced throughout the refrigeration plant.

e. The video surveillance system, under this option, shall be a fully installed functional system. This system shall be compatible with the existing IRT facility imaging system and capable of displaying the video outputs at the existing IRT Control Room. The video surveillance shall include a minimum of three (3) video cameras. The placement of the cameras shall utilize the widest range of views for the Refrigeration Plant such that the IRT Operators can view and monitor the entirety of the equipment and facility. The locations shall be reviewed with and concurred by NASA. The video cameras shall provide autofocus high resolution color images and include pan, tilt and zoom functionality. Refer to Appendix B, Section J *Communications* Part 4 of the PRD for the base system installation.

DRAFT

ATTACHMENT 4.01

PROJECT REQUIREMENTS DOCUMENT

PROJECT REQUIREMENTS DOCUMENT

for

RECOVERY ACT

FY09 Replacement of the Refrigeration Plant

at Building No. 9

Project No. 13956

NASA Glenn Research Center
Facilities Division

DRAFT

Change Record

Revision	Effective Date	Description
Baseline	10/01/2009	Initial Release
A	10/09/2009	Revised refrigerant detection and Safety; Add signature
Final	10/14/2009	Release for Signature Approval
Change 1	10/30/2009	Incorporation of Comments

Document Approvals

Paul A. Kuehn, CoF Project Manager Date

Jeffery A. Chambers, ATP Lead Project Manager Date

John R. Oldenburg, IRT Facility Manager (Customer) Date

Jeffery E. Haas, Chief
Facilities Test Engineering Division (Customer) Date

Joseph F. Torri, Chief
Systems Management Branch Date

Renee D. Palyo, Chief.
Engineering Management Branch Date

Gene L. Stygles, Chief
Project Management Branch Date

Christine E. Greenwalt, Lead
Safety, Health and Environmental Construction Team Date

Manuel B. Dominguez, Chief
Safety, Health and Environmental Division Date

DRAFT

TABLE OF CONTENTS

TITLE **PAGE**

INTRODUCTION

SCOPE / DESCRIPTION 4
CUSTOMER PROJECT GOALS 4

JUSTIFICATION 6

TECHNICAL REQUIREMENTS

GENERAL REQUIREMENTS 6
SPECIAL CONSIDERATIONS 11
COSTS 12
LAYOUTS - CONCEPT SITE AND FLOOR PLANS 13

APPENDIX

A IRT REFRIGERATION PLANT PERFORMANCE AND CONTROL REQUIREMENTS 15

B PROJECT AND ENGINEERING DISCIPLINE SPECIFIC REQUIREMENTS 22

DRAFT

Introduction

Scope & Description

This project is conceptually based on an option (Option 3) of a 2007 study titled “Concept Study – Replacement of Refrigeration System for the Icing Research Tunnel (IRT), Building 9” and is planned as a Design / Build procurement to meet the Agency metrics for American Recovery and Reinvestment Act funded projects.

This project intends to provide the design and construction services to replace the existing refrigeration plant of GRC Building No. 9 with a new refrigeration system, housed in a new building. The new building will be constructed adjacent to Building No. 9 and be installed with new building systems and infrastructure. The new refrigeration system shall include a new wind tunnel heat exchanger, decrease the minimum tunnel operating temperature from minus 25 deg C to minus 40 deg C and eliminate an icing erosion technical issue. The new refrigeration system includes new, modern chillers, automated controls, and a secondary cooling fluid pumping system.

The new Refrigeration Plant building shall be known as GRC Building No. 170

Customer Project Goals

Quality Goals

The design and construction shall be managed to develop a comprehensive set of plans, specifications and relevant documentation to construct a functional modern refrigeration system to support the IRT’s research operations. The project will provide all work and products in compliance with all applicable industry standards, national consensus codes, NASA GRC Facilities Division guidelines and the IRT’s technical requirements.

The project shall be designed and executed to minimize environmental damage consistent with the project scope and budget.

All hazardous material abatement shall be carried out in compliance with all Federal, State and Local environmental regulations and the GRC Environmental Programs Manual.

The project shall be designed and field construction implemented in such a way as to eliminate hazards to people occupying adjacent facilities, construction workers and personnel around the immediate work site.

The project shall also be designed and constructed so as to minimize the impact to the test programs of the IRT and diminish the potential for damaging adjacent facilities and infrastructure.

Implementation Goals

It is expected that there will be impacts to adjacent facilities and occupants due to the Wind Tunnel Heat Exchanger and Refrigeration Plant activities scheduled for the project site. The site is adjacent to many existing structures and equipment;

DRAFT

however, the project entails the construction of a new building with associated utilities and refrigeration process systems. Therefore, congestion on site becomes an issue to manage through design, work control and coordination with the NASA Project Team. Interfaces between the Contractor and IRT will be coordinated and managed to facilitate the construction effort.

Active facilities adjacent to the site include Buildings No. 7, 9, 11, 30 and adjacent utilities such as Yard Substations, Central Process Systems and Center infrastructure services. Pavement areas surrounding the site and associated areas outside the project's boundaries shall be protected during construction or must be restored to pre-construction like condition.

Parking will be congested during on-site construction due to the limited access around the project site. Project parking needs are to be coordinated with the Contractor and the NASA Project Team.

There are numerous utilities impacted by this project and they will be modified in ways to minimize service interruptions to adjacent system users. Some utilities may have to be rerouted and/or extended.

Truck traffic associated with the project's construction will impact general GRC traffic patterns. All materials to be disposed of will have to be weighed on the heavy duty scales of Building No. 215 prior to transport off Center.

Fencing shall be required to define a safe zone around the project site but allow access to specified locations defined by the NASA project team and to provide pedestrian and vehicle safety as well as control site staging areas for equipment mobilization, scrap load-out, temporary material staging, and Contractors' temporary facilities.

Occupants or stored equipment to remain in and/or around existing buildings or on the project site scheduled for construction will be relocated as required. Coordination with Building Managers, Occupants and other appropriate stakeholders will be required to establish a relocation plan and relocation responsibilities.

Schedule Goals

This project as currently configured is scheduled for design and construction to start during the start of calendar year 2010 and to be complete by the end of April 2011. The duration will be dependent on elements further detailed in the Government's Request for Proposal which will include the project's Statement of Work and this document.

Design and Construction schedule growth shall be limited to 5%.

The Project shall be designed and implemented to require the minimum possible outage time experienced by the IRT. All construction shall be completed to the maximum extent possible before systems are switched over at the site. Assuming that work is executed safely, there is moderate risk to project schedule once the Wind Tunnel Heat Exchanger and systems switchover work begins. Accurately coordinating the design and site implementations prior to the start of the segmented construction work will substantially improve the possibility of meeting proposed schedules and mitigate project risks.

DRAFT

Cost Goals

The project is funded through the American Recovery and Reinvestment Act (ARRA) of 2009 and brings some associated and mandated project metrics that we are working to achieve through the ARRA and Aeronautics Technologies Program (ATP).

There is an expectation to have the Design / Build funds obligated by March 30, 2010. Currently, there is the understanding that the funding should be costed by no later than the end of FY 2010.

The primary objective on this Project with respect to cost shall be to limit cost growth to 5% and to not exceed the budget authority provided. This includes both the design and construction.

Overall project cost risk will be mitigated by maintaining a comprehensive statement of work with requirements detailing the objectives of the final structure, systems and deliverables by the Contractor. However, due to the nature of a Design / Build, cost growth will need to be monitored and controlled at all times.

Hazardous material abatement can pose a minor cost risk; however, some adjustments can be made in the construction scope and procedures on this project to control abatement costs.

Justification

The GRC/Lewis Field Icing Research Tunnel (IRT) is one of the most heavily utilized ground test facilities in the Agency. Testing in the IRT supports important NASA Programs such as the Aviation Safety Program, the Fundamental Aeronautics Program, and the Advanced Aircraft Program. In addition, the IRT is a highly sought-after facility for testing by reimbursable industry customers such as Boeing, Sikorsky, Cessna, Hamilton Sunstrand, Goodrich, and Bell Helicopter.

The existing refrigeration plant was built in 1944, and the equipment has become increasingly difficult to maintain and operate. Although routine maintenance is performed, subsystem failures have occurred resulting in a reduction in test facility capabilities below the advertised values.

Currently, the system is being operated in a "Run to Failure" mode. Spare parts need to be custom-made by the OEM, are very expensive and require long lead times to procure.

In addition, the existing plant requires five full-time employees during operations. The new plant shall be designed to be remotely operated from the main IRT control room and therefore require no on-site plant operators (thus, reducing the cost of test operations).

The modernization of the IRT refrigeration system is deemed necessary to meet the research needs of the NASA Aeronautical Technologies Programs (ATP) and to meet the testing needs of the Aeronautics Industry.

Technical Requirements

General Requirements

The following technical information (in general outline form) will require a mix of analysis, design, development of specifications, and cost estimating / control:

See Appendix A for a detailed description of the IRT Replacement Refrigeration Plant's Performance and Control Requirements.

Customer's Technical Requirements:

Project Technical work shall include:

- Design and install a new wind tunnel heat exchanger within the interior boundaries of the wind tunnel corners known as "C" and "D"
- The heat exchanger (HX) shall have characteristics that include extraction of the desired range of cooling load from the tunnel, a lower tunnel minimum operating temperature, provide a defined air flow quality, be within allowable pressure drops across the HX, and release no ice particles, which is viewed as a correction to the current ice erosion issue
- Design and install a user adjusted automated refrigeration plant with a secondary fluid coolant system for the wind tunnel heat exchanger
- The new plant will be operated primarily from the existing IRT control room and also will have local control from the Refrigeration Plant Control Room. Operation will also include the elements from the technical parameters as indicated by the IRT and design requirements
- Provide system integration for all new systems including between the new and existing research and facility systems and components

The following major disciplines (in general outline form) will require a mix of analysis, design, development of specifications, and cost estimating / control:

See Appendix B for detailed descriptions of the project and engineering discipline specific requirements.

Architectural:

Project Architectural work shall include:

- The new building housing the new refrigeration system shall be similar to the existing Building No. 9 in appearance and construction
- The new building will be designed and constructed per the International Building Code (IBC) as adopted by NASA
- Restoration of the IRT to pre-project condition after removal and installation of the new heat exchanger
- Repair of the existing IRT and Building No. 9 exterior penetrations shall be made with like materials and shall provide a similar, uniform appearance

Civil / Survey:

Project Civil and Survey work shall include:

- Removal and replacement/repair of all pavements related to the extent of construction activities including utility modifications
- Removal of concrete foundations and below-grade trenches, pits, and vaults

DRAFT

- Removal of designated spoils (hazardous and non-hazardous) to appropriate disposal facilities
- Modifications to existing and new site drainage structures and sewers, sanitary sewers and infrastructure utilities as required
- Development of a temporary site access control and staging plan
- Design boundary interface barricades / guardrails and fencing as required
- Site restoration including grading / seeding throughout the project area

Structural:

Project Structural work shall include:

- General facility demolition work
- Construction of a new building concrete foundation and floor slab with any sub-grade level housing secondary cooling system equipment
- Analysis, design and install of supports for all utility modifications, relocations and terminations as required
- Design and construction of all structural elements such as the building superstructure including an overhead crane, major equipment, walls and roofing systems and various system component supports

Mechanical / Process:

Project Mechanical and Process work shall include:

- Install new modern screw compressors each packaged with a condenser, economizer, chiller barrel and associated piping, instrumentation and controls
- Install a secondary cooling loop from the compressor's chiller barrel to a new wind tunnel heat exchanger including a liquid pump, expansion tank and large (up to 26 inch diameter) piping main supply and return.
- Install a cooling water loop from the existing cooling water system to the new compressor units including transfer pumps, wet well and associated piping
- Termination, removal, re-support, and rerouting as required of all existing system components within this project scope
- Install a fire sprinkler system
- Installation of plumbing systems
- Install general ventilation and heating for the building including HVAC for the new Control Room and Restroom
- Install ventilation for the Refrigeration Equipment
- Replacement of the existing IRT Heat Exchanger with a newly designed heat exchanger
- Termination of all services from all existing equipment (e.g. Building 9 research chillers) and designated mechanical components scheduled for decommissioning under this project
- Piping connections with blank flanges for future tie-in of two (2) chillers

Electrical / Instrumentation & Controls:

Project Electrical and Instrumentation & Controls work shall include the following:

DRAFT

- Install all conduit, conduit components, and miscellaneous electrical equipment
- Install all electrical services as required to support the new equipment
- Install general lighting and power
- Install a facility control system integrated with the existing IRT facility systems
- Install all fire alarm equipment and building management systems equipment.
- Install an intercom / paging system and integrate it with the existing IRT facility system
- Install video surveillance equipment
- Install a refrigerant detection system
- Termination and disconnection of all power from all existing equipment (e.g. Building 9 research chillers) and designated electrical components scheduled for decommissioning under this project
- Provide adequate space for future electrical equipment to power and control an additional (2) chillers

Safety and Health:

Specific safety considerations shall be integrated into the design development process. The Contractor shall coordinate integration of safety concerns into the project requirements as part of the facility system safety process. The guiding document for this process is NASA-STD-8719.7, *Facility System Safety Guidebook*. A tiered hazard analysis process will be implemented by NASA and requires full participation by the Contractor. As the design is not fully developed at the requirements stage of the project, initial values will be assumed and further refined as the design is developed. A Facility Risk Indicator (FRI) of 3 (Low Risk) will be assumed for this facility unless a more detailed hazard analysis indicates otherwise. As a result of this classification, the following actions will be taken to address facility system safety during the design of this project:

- NASA (Facilities Division, Facilities Testing and Safety, Health & Environmental Divisions) will develop a Preliminary Hazard List and will deliver this list to the contractor after the award of the contract and prior to beginning of the design activity. This list will be used by the contractor for consideration in design development. This list will be delivered during a safety coordination meeting where representatives of NASA and the contractor will gather to discuss the facility system safety process and gain a mutual understanding of the implementation for this project.
- The Contractor shall provide a minimum of a one-page hazard analysis for each item on the Preliminary Hazard List that describes the hazard in details specific to the proposed design, identifies what systems or features are proposed that mitigate or eliminate the hazard and what regulatory requirements (OSHA, Ohio Building Code, NFPA Standards, etc..) are relevant, if any. This collection of hazard analyses will be delivered to NASA as part of the Preliminary Design Review submission.
- NASA will develop a detailed and integrated Hazard Analysis based upon the preliminary design packages and preliminary hazard analyses from the contractor. The safety concerns will be identified in a Hazard Analysis Tracking Index which will be delivered to the Contractor for use in the design development process. This list will identify key issues and their scheduled completion dates throughout the design and construction process.

- The Contractor shall integrate mitigating solutions, features and controls into the design. The final drawings shall clearly identify critical safety systems and shall coordinate identification of these systems with the Final Hazard Analysis Report.

Implementation of a construction safety program is key to successful project completion.

All project work shall be controlled by Project Specifications, a Contractor (and sub-Contractor) generated Site Specific Health and Safety Plan (SSHASP), a Design & Construction Implementation Plan consistent with and expanding on SSHASP requirements, routine project meetings, and daily on-site Government inspection.

The safety and health of site Contractor personnel, on-site Government inspection personnel, and site perimeter personnel will be key issues. Contractor use of construction procedures inconsistent with the SSHASP and Design & Construction Plan will not be tolerated and will be addressed through daily project inspection and reporting.

On-site trucking, staging and routing will be addressed in the Contractor's Implementation Plan. Termination or interruption of active utilities will be handled through the implementation of all required NASA and GRC safety procedures and approval processes.

Environmental:

Refrigerants, secondary coolant fluids and other project materials shall be selected to provide low environmental impacts and consistent with the applicable NASA GRC Environmental Programs guidance. In addition, selected materials shall minimize exposure to personnel or the Contractor shall provide administrative and/or engineering controls to limit exposure.

The new Refrigeration Plant is proposed to be built within the footprint of the former Altitude Wind Tunnel and the site has known or potential hazardous material contamination. The project will develop a site characterization work plan for how the areas are to be investigated and sampled. The site characterization work plan shall be reviewed and concurred by the GRC Environmental Manager. An abatement plan will be integrated into the project design and the Contractor's SSHASP and Construction Implementation Plan.

Historical environmental data shall be used and new sampling data acquired to determine potential sources and quantities of asbestos, lead-based paint, lead, mercury, PCB's, miscellaneous hazardous organic and inorganic substances, and biological materials. Removal of asbestos or asbestos containing materials (ACM) will take into consideration their friability grouping to reduce abatement costs. Lead-based paint removal from existing structural steel will normally only be required at hot-work cut lines provided that the existing paint is intact (no visible peeling, loose checking and/or chipping) on the material.

If existing sampling data does not exist, soils shall be sampled for mercury, lead, PCB's, and other contaminants. There will be a significant amount of excavation required for below-grade structures and site utilities modification, the sites shall have some determination performed for the areas expected to be disturbed. The handling of excavated soils will be performed as per the GRC Environmental Programs Manual, Chapter 23, Project Specifications and all other mandated local, state, and Federal requirements.

All contaminated excavated soil shall be removed from the Glenn Research Center. All non-contaminated excavated soil may be used as backfill if it can be properly compacted

and meets material characteristics contained in the Project Specifications; otherwise, it shall be removed from the Glenn Research Center. All off-site backfill material brought on the project site shall be tested to determine if it is “clean”. Material determined to be not clean shall be rejected.

Materials that will be removed and disposed of from GRC will require manifesting. All manifested materials include but are not limited to debris, waste, water, soils and recyclables.

Area/Space Requirements

The Refrigeration Plant building is envisioned to be an unoccupied structure subdivided into several areas: Main Refrigeration Equipment, Control Room, Restroom, Electrical, and Mechanical.

The Main Refrigeration Equipment area will house the refrigeration system compressors, vessels, heat exchangers, piping components, etc. This area shall include space for equipment staging / maintenance functions and a separate space for up to two additional compressor units for future applications adjacent to the installed units under this project.

The Control Room will house the control systems for the Refrigeration Plant and provide local control if required by the IRT operators.

The Restroom will be provided in support of the building when staff is required to be in the building for local system configuration and maintenance purposes.

The Electrical area(s) will be the location that houses the Motor Control Center and other electrical distribution system components.

The Mechanical area(s) will be the location which houses the refrigeration system cooling equipment and other mechanical building and process system components.

Once this project is completed, the existing refrigeration system will be available for further decommissioning and/or removal from the Building No. 9 structure under a separate project.

Special Considerations

It is intended that all work, except tasks related to the heat exchanger installation, will be accomplished as the Icing Research Tunnel maintains an active test program. Once the IRT facility is offline due to the wind tunnel heat exchanger installation, the downtime must be kept to a minimum with an anticipated maximum four (4) month duration.

Planning may require extended hours, second shift work and/or protection of areas not directly involved in the construction scope. The disruption, tie in and restoration of utilities and services must be carefully scheduled and planned to minimize the impacts to the existing facility (e.g. IRT, Building No. 9 and surrounding) operations.

During the course of the installation work at the project site, at IRT and at Building No. 9, existing utilities and systems shall require safing (from a state of readiness to a safe condition),

DRAFT

abandoned in place and/or restored. These items are required to be adequately isolated and in many cases physically separated from their sources. The IRT plans to provide limited support to “make safe” the designated system elements in the Contractor’s performance of the work. The Contractor shall be responsible to verify the condition of the system prior to working on them, properly evacuate and dispose of any system materials (e.g. refrigerants, wiring, fluids, etc.), disconnect and/or maintain the integrity of the remaining system. The Contractor shall remove these designated elements in their entirety (e.g. specific exterior and trench piping along Building no. 9); however major equipment components are not part of the physical removal intent (e.g. existing compressors in Building No. 9).

Cost

The project requirements noted above describe, as a general overview, the work required to design and construct the new building, new refrigeration system including a wind tunnel heat exchanger, and transfer services from the existing plant to the new plant.

There will be substantial fixed and variable costs for the design and construction plus significant effort to maintain the sequence of implementation. Construction procedures can vary widely to install elements on this site; however, it is assumed that Contractors would use the most efficient methods currently available while conforming as a minimum to the NASA GRC Facilities Division guidelines.

The project costs were established based on the 2007 Concept Study and subsequent budget authority provided by the ATP and ARRA fund sources. Under this unique fund source, all normally NASA supported activities (SIES, Support Services, etc.) will require funding from separate Center sources. The project will maintain a budget contingency in an effort to provide for any costs viewed as outside the defined project scope, such as unforeseen site conditions.

DRAFT

Layouts

Site/Location Plan from the 2007 Concept Study

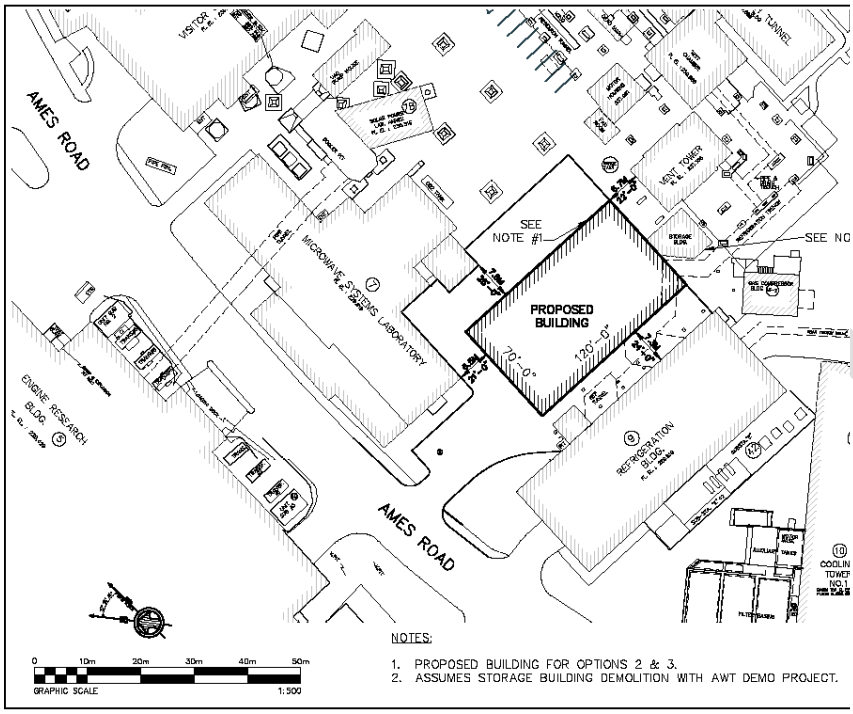

DRAFT

Floor Plan(s) from the 2007 Concept Study

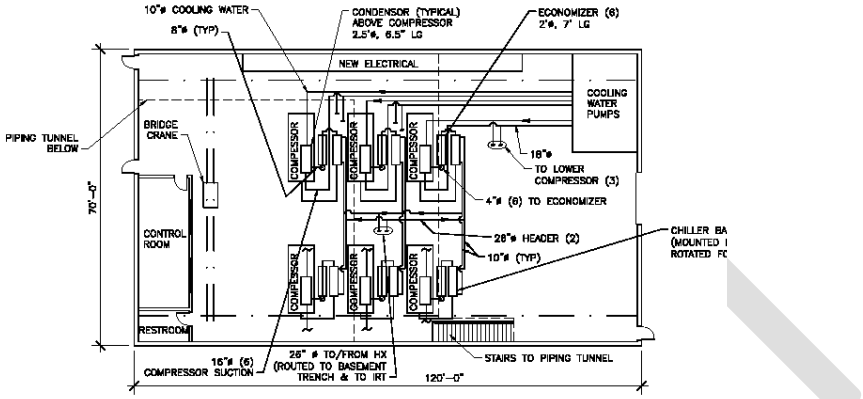

NEW BUILDING
FLOOR PLAN OPTION 3

1/16" = 1'-0"

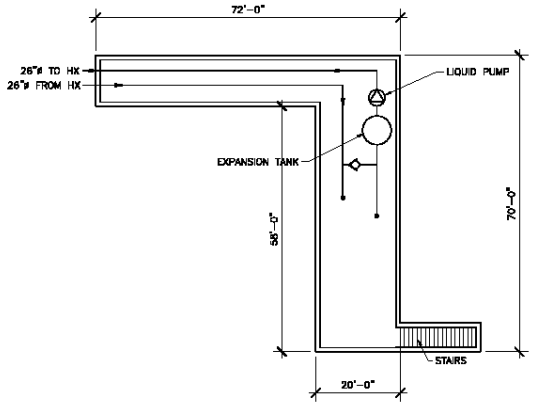

NEW BUILDING (BASEMENT)
PIPING TUNNEL PLAN OPTION 3

1/16" = 1'-0"

Appendix A

ICIING RESEARCH TUNNEL REFRIGERATION PLANT PERFORMANCE AND CONTROL REQUIREMENTS

September 03, 2009

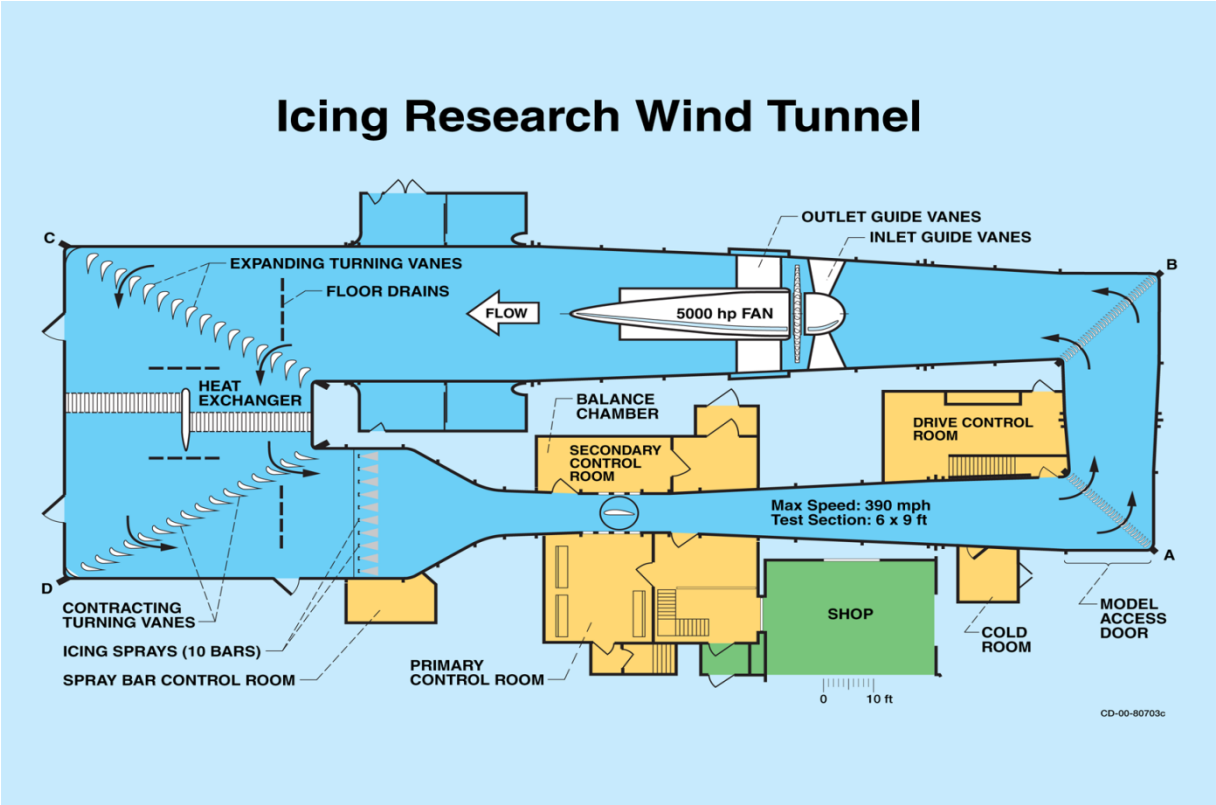

The Refrigeration and Heat Exchanger replacement will use concept 3 from the final concept report of the “Replacement of Refrigeration System for the Icing Research Tunnel (IRT), Bldg.9” done by Collaboration Design, Ltd., Sietech, Aero Systems Engineering, and URS. This concept shall be used as a guideline to meet the technical requirements as outlined within this specification.

1. Technical Requirements

The operating temperature for the Test Section Static Temperature shall be from +5 to -40 degrees Celsius for all Test Section Air Speeds. The minimum temperatures at the exit of the heat exchanger (i.e. “D” corner) versus airspeed are listed below in Table 1-1.

Table 1-1: Wind Tunnel Heat Exchanger Exit Temperature versus Test Section Airspeed

Vts (kts)	*Ts Test Section (C)*	*“D” Corner Ts (C)*
50	-40	-40
100	-40	-39
150	-40	-37
200	-40	-35
250	-40	-32
300	-40	-28
350	-40	-24

The air side pressure drop across the heat exchanger shall be no more than 1.5 inches of water with a test section velocity of 250 knots.

The pressure drop across the heat exchanger shall not exceed 3 inches of water during a 90 minute water spray at a test section airspeed of 250 kts at any tunnel air temperature.

The heat exchanger shall extract up to 2000 tons of cooling from the air side of the tunnel.

The minimum number of compressor units shall be 6, with only 5 compressors needed to meet the cooling load of 2000 tons.

The dew point of the incoming air is 2 degrees C colder than the air temperature.

The cool down rate of the air from 25 degrees C to -18 degrees C shall be 30 minutes or less.

The warm up rate of the air from -20 degrees C to +15 degrees C shall be 30 minutes or less.

The average tunnel air temperature shall be stable within +/- 0.1 degrees C of the set point.

The temperature of the air at the exit of the heat exchanger shall have a spatial uniformity over the entire area to within the data of Table 1-2:

DRAFT

Table 1-2: Spatial Uniformity of Wind Tunnel Heat Exchanger Exit Air Temperature

Temperature Range From	*Uniformity Range*
+5 to -5 degrees C	+/- 0.1 degrees C
-5 to -10 degrees C	+/- 0.15 degrees C
-10 to -15 degrees C	+/- 0.2 degrees C
-15 to -20 degrees C	+/- 0.25 degrees C
-20 to -25 degrees C	+/- 0.3 degrees C
-25 to -30 degrees C	+/- 0.35 degrees C
-30 to -35 degrees C	+/- 0.4 degrees C
-35 to -40 degrees C	+/- 0.45 degrees C

The system shall be designed to release no ice particles from the heat exchanger surface. Therefore the heat exchanger face velocity should be kept as low as possible: the design goal is 750 ft/min or less at a test section velocity of 350 knots (maximum tunnel test section air speed). The heat exchanger surface temperature should also be as close as possible to the exit air temperature.

The air flow quality in the test section is directly related to the air flow quality at the exit of the heat exchanger. The contractor shall select a heat exchanger that will maintain or improve the flow quality provided by the existing heat exchanger. The air flow quality has been defined in terms of velocity spatial uniformity, turbulence intensity and flow angularity according to measurements documented in AIAA Paper 2001-0232. A detailed analysis of the heat exchanger airflow is not required, however, an engineering justification (e.g., heat exchanger manufacturer specifications, a comparison of flow path geometry to the existing heat exchanger) shall be provided to evaluate the exit air flow quality. Based upon the measurements documented in AIAA Paper 2001-0232, the following guidelines are provided:

The velocity profile of the air at the exit from the heat exchanger shall be spatially uniform to within +/- 5% with the test section velocity of 300 knots. (Reference paper AIAA-2001-0232 for location in tunnel.) The velocity is spatially uniform in both directions of streamwise and vertical.

The turbulence intensity of the air at the exit from the heat exchanger shall be less than 4% with the test section velocity of 300 knots. (Reference paper AIAA-2001-0232 for location in tunnel and definition of turbulence intensity.)

The flow angularity of the air at the exit from the heat exchanger shall be within +/-2 degrees in the Yaw direction and +/-4 degrees in the Pitch direction with the test section velocity of 300 knots. (Reference paper AIAA-2001-0232 for location in tunnel and definition of Yaw and Pitch directions.)

DRAFT

The Heat Exchanger shall fit in the existing structure of the tunnel between the “C” and “D” corners of the tunnel.

2. Operation

The Icing Research Tunnel usually runs 5 days per week, approximately 7 hours per day. The tunnel runs in the range of 1400 to 2000 hours per year. There are times throughout the year when the tunnel may not run for a few weeks.

The expected operation of the system is as follows:

One technician/operator will perform a pre-run check procedure of the refrigeration system to ensure that all system components are ready for operation. This check should take no more than 1 hour. The contractor shall provide this pre-run check procedure.

The tunnel operator will enter the set of compressors and the first temperature set point into the facility control system and initiate the ON command. The facility system shall communicate this information to the refrigeration system control. Until a change in the set of compressors or other operator commands the compressors in the set will remain ON. The temperature will be controlled via valves not by turning on and off the individual compressors. The tunnel fan will be started and will either go to the first test airspeed or to a lower airspeed, as required to cool the tunnel down most efficiently (to be determined by the contractor). The temperature set point shall be attained within 30 minutes or less.

The tunnel will be allowed to cold-soak at the temperature set point and correct airspeed for approximately 10 minutes. At that point in time the tunnel air temperature shall have the temperature stability and spatial uniformity as specified in Table 1-1 and Table 1-2.

The water spray will be turned on and remain on for 5 to 45 minutes. During this time the refrigeration system shall maintain the temperature set point and spatial uniformity as specified in Table 1-1 and Table 1-2.

The water spray will be turned off and the tunnel fan will be stopped. The facility system will communicate the IDLE command to the refrigeration system control. This signal alerts the refrigeration system control that the tunnel operators are entering the tunnel for a 5 to 45 minute period but tunnel operations will resume shortly. The idle signal will allow the refrigeration system to go to a configuration that will allow a more efficient return to operation then from a complete system off configuration.

After the tunnel entry the same or a new temperature set point and the same or new set of compressors will be entered and the IDLE command removed. The facility could also send a signal identifying the next airspeed to be run if this would help improve efficiency of operations. The fan will be restarted and will be set to the same or a different airspeed. The new temperature must be reached and stabilized within the following time limits shown in Table 2-1:

DRAFT

Table 2-1: Wind Tunnel Temperature Stabilization Criteria

Temperature SP Difference	*Airspeed Difference*	*Time to Stabilize*
0 C	0 kts	3 min
2 C	0 kts	3 min
5 C	0 kts	5 min
10 C	0 kts	10 min
20 C	0 kts	20 min
0 C	25 kts	3 min
0 C	50 kts	5 min
0 C	100 kts	7 min
0 C	200 kts	10 min
2 C	25 kts	5 min
5 C	50 kts	8 min
10 C	100 kts	13 min
20 C	200 kts	23 min

This process will be repeated over a period of approximately 6 hours.

At the conclusion of that day's run, the facility control system will communicate the WARM command to the refrigeration system control. The refrigeration system shall then begin the process of warming up the tunnel. The tunnel must then be warmed up in accordance with specification in Section 1 (p. 15).

The facility control system will communicate the OFF command to the refrigeration system control. The refrigeration system shall then begin the process of shutting down and securing the system. The refrigeration system shall be able to shut down and secure in 30 minutes or less. This time includes any required post-run checks that may be required. The contractor shall provide this post-run check procedure. The system shall be capable of remaining in this condition indefinitely (i.e., days or months).

3. System Controls and Instrumentation

The integrated control for the refrigeration system shall have a high level controller which controls the complete system. There may be individual controllers for each compressor but the high level controller shall serve as the main control and interface. This controller would handle the Compressors, Valves, and Instrumentation and would interface to the

DRAFT

existing facility control system. The existing facility control system is an Emerson Ovation level Distributed Control System. The interface would input control signals from the existing facility system and output refrigeration system status to the facility system for display and historical storage. Control inputs would include but not be limited to the temperature set-point, the ON command, the OFF command, the IDLE command, the set of compressors, and the D-corner temperature information and other information if already collected as requested by the contractor. The status information shall include all pressures, temperatures, flows, valve positions, pump status, and other control information in the refrigeration system. The interface would be via a serial RS232 connection, and Ethernet as a minimum to a remote controller unit from the facility system located in the refrigeration building control room.

The Refrigeration System shall have a local control in the new building. The local control shall handle any and all functions of the refrigeration system. Manual control functionality shall be available for all refrigeration system equipment. This manual control capability shall allow all of the equipment to be operated independently for maintenance, check out, and set up and calibration. Normal operation of the refrigeration system shall be remotely from the tunnel control room via the facility control system. No operators shall be located in the refrigeration building in support of the IRT icing runs. Normal operation shall be defined as tunnel test running.

The Refrigeration System shall have a hardwire shutdown capability that shall override the controller. The hardwire shutdowns shall be operated from the refrigeration bldg, as well as, the tunnel control room. The hardwire shutdown shall return the system to the OFF condition without any further operator interface in 5 minutes or less. A hardwire shutdown shall be defined as requiring no additional controls or inputs from the refrigeration control system. The hardwire shutdown shall not put the system into an unsafe state. The hardwire shutdown shall not disrupt status communication.

The Control System shall have redundancy built in, that will include controllers, networks, and power for the control system. The I/O does not have to be redundant. UPS shall be supplied for all PC and network hardware. The UPS shall have a minimum of 3 hours of operation.

The control scheme shall allow the IRT operator to determine the set of compressors that will be used for that night. In this way the operator can limit the number of compressors running to allow smooth interaction with the power dispatch personnel. Determining the set of compressors also allows the operator to balance run hours for each compressor. Due to plant power constraints it is not desirable to run all of the compressors all of the time. It is also not desirable to power ON and OFF the compressors during a run sequence due to power constraints. The operator shall determine the set required to satisfy the tunnel testing conditions for the run sequence. The facility could also send a signal identifying the next airspeed to be run if this would help improve efficiency of operations.

Instrumentation and equipment used on the system shall be similar for the complete system. For example pressure transducers should all be from the same manufacturer and wherever possible the same model. Instrumentation shall have an accuracy of at least 0.5% Full Scale and shall have a recalibration interval of 1 year or more.

Instrumentation shall be installed to permit easy access for verification, removal and calibration. Easy access shall be defined as taking no more than 5 minutes to remove the equipment from the system. Wherever possible instrumentation should be at shoulder height or lower. Removal of instrumentation shall not cause a spillage of refrigerant. The PLC used for the high level control shall be a Modicon Quantum model. All I/O shall be Quantum. The PLC configuration and control software shall be Concept. Any HMI software shall be developed using Wonderware Version 10 or later.

Instrumentation required for each supply header within the heat exchanger is as follows: pressure in the header using pressure transmitters (4-20mA output), temperature in the header using thermocouple(s) – (type E), and flow rate of cooling fluid using flowmeters – (4-20mA output). The number of instrumentation ports required shall be determined at the Preliminary design review.

Each heat exchanger module shall be equipped with flow control valves to allow for balancing of the system. Each module shall also be equipped with 100 ohm platinum resistance temperature devices (RTD) at the inlet and exit of the coolant piping to measure the fluid temperature.

4. Maintenance

A complete maintenance program shall be defined and detailed for the system. The maintenance program shall contain a schedule of maintenance activities, a description of each activity, a complete list of parts and vendors, and a list of recommended spare equipment.

A means to evacuate both the main and secondary cooling loops shall be provided. The evacuation of one or both fluids shall not take longer than 2 (8 hour) shifts.

Manual isolation valves shall be installed upstream and downstream of equipment system components that need to be isolated for maintenance or calibration such as filters/screens, dryer blocks, instrumentation, etc. Evacuation ports shall be located in all areas that require maintenance activities.

A single point loading/unloading for each cooling fluid shall be from a tanker truck located outside of the new building.

5. Other Considerations / Requirements

Toxic fluids shall not be used in the secondary cooling loop. This eliminates the exposure to the personnel in the tunnel.

DRAFT

Appendix B

PROJECT AND DISCIPLINE SPECIFIC REQUIREMENTS

A. General

1. The project shall incorporate (as practical) the model of the U.S. Green Building Council's Leadership in Energy and Environmental Design for New Construction (USGBC LEED-NC) where its application is not cost prohibitive and/or does not add significantly to the design complexity.

2. Maintainability as defined by NASA is the design, installation, and operational characteristics of an item used for ease of keeping it operational (e.g. designed access to a chiller's coils for removal and ease of cleaning). The Contractor shall provide elements of maintainability in the performance of the project.

3. Sustainability as defined by NASA is an overarching concept incorporating appropriate sustainable design practices, maintainable design elements, building commissioning processes, safety, health and security features into facility planning, design, construction, activation, operation and maintenance, and decommissioning to enhance and balance facility life-cycle cost, environmental impact, and occupant health, safety, security, and productivity. The Contractor shall provide elements of sustainability in the performance of the project.

4. Unless otherwise noted, the minimum design and construction provisions for any subject work shall be per the NASA Facilities Design Policies and Guidelines.

B. Environmental

1. The Contractor shall perform the necessary site investigation, sampling, testing and subsurface soil investigation to characterize all hazardous materials located at the project sites. A Sample and Analysis Plan and Site Specific Health and Safety Plan shall be prepared by the Contractor to provide the nature and extent of the assessment of the project site prior to the beginning of site characterization field work.

   The site characterization shall include but is not limited to:

   a. The size and location of the project site

   b. Visual inspection and history of site

   c. Stored chemicals on the site

   d. Presence or absence of areas designated as sensitive or of potential natural significance (e.g., water courses, shallow soil areas, areas of designated or protected species, etc.)

   e. Environmental data consisting of chemical analyses of soil, water or air samples. The data results shall be prepared in report format.

   f. An evaluation of risk exposure to workers and general public (e.g. Lewis Field) during cleanup and at final site usage.

DRAFT

g. Identification of all hazardous materials, their location and/or areas of concern and estimated quantities. Recommendations for handling and disposal shall be included as part of the report.

h. Detailed report listing all identified materials, locations and quantities organized by location. The report shall be suitable for construction bidding purposes.

2. See Division 01, Section 01 35 43.98 *Environmental Protection Procedures* for related project requirements and include the additional information below:

   a. The proposed project site and associated project areas must consider storm water management. A general construction notice of intent (NOI) permit is required for sites disturbing more than one (1) acre. A Storm Water Pollution Prevention Plan (SWPPP) shall be required and prepared in accordance with NASA's General Storm Water Plan (SWMP), OEPA Permit OHC000003 and as described in Division 01, Section 01 57 23.98 *Temporary Storm Water Pollution Control*. Best Management Practices (BMPs) during construction (Erosion Control Measures) and post-construction (Water Quality) shall be implemented.

   b. All contaminated excavated soil shall be removed from the Glenn Research Center at Lewis Field as addressed in Division 01 and Division 02, Section 02 61 00.98 *Removal and Disposal of Contaminated Soils* of the Project Specifications.

      All non-contaminated excavated soil may be used as backfill if it can be properly compacted and meets material characteristics contained in the Government approved Project Specifications; otherwise, it shall be removed from the Glenn Research Center at the Contractor's expense.

      All off-site backfill material brought on the project site shall be tested to determine if it is "clean" by applicable environmental standards and as approved by NASA. Material determined to be not clean shall be rejected and removed from the Center as the Contractor's expense.

      Spoils shall not be placed in any new or existing Center borrow pits. All spoils shall be removed from the site and off Center within 24 hours of generation.

   c. Materials that will be removed and disposed of from Glenn Research Center will require manifesting. All manifested materials include but are not limited to debris, waste, water, soils and recyclables.

   d. All materials shall be weighed on the heavy duty scales of Building No. 215 prior to transportation to respective NASA GRC approved recycling or disposal facilities as per the NASA GRC Waste Management Team.

   e. All materials shall be properly recycled or disposed of by the Contractor as described in Division 01, Section 01 74 19 *Construction and Demolition Waste Management* during the execution of the project.

C. Site Preparation / Selective Demolition

1. The proposed building location is contained within the footprint of the former test facility known as the Altitude Wind Tunnel (AWT). Therefore, the project design and construction shall incorporate work related to existing building setbacks and the modification and/or removal of existing foundations, below-grade pits and trenches that will be required in the

construction of the new building and systems.

2. Existing asphalt and concrete pavements shall be removed within the defined overall site boundaries and other site related work areas (e.g. utility trenches). Pavement removal / restoration limits shall be approved by the NASA Project Civil Engineer.

3. Existing utilities will need to be modified, relocated or removed as required and as directed by NASA. These utilities include but are not limited to the following systems located within the proposed project site:

    Storm Sewers (S)
    Sanitary Sewers (SAN)
    Domestic Water (DW)
    Chilled Water Supply and Return Lines (CHWS)(CHWR)
    Cooling Tower Water Supply and Return Lines (CTWS)(CTWR)
    Power / Electrical Service (P)
    Telephone (T)
    Steam Lines (ST)
    Carbon Dioxide Lines (CO2)
    Combustible Air (COMB A)
    Service Air (SA)
    Natural Gas (NG)
    Other Unidentified Lines that may be present

D. Architectural

1. Icing Research Tunnel Exterior and Interior

    a. Removal and installation of the Icing Research Tunnel Heat Exchanger will require the Contractor to replace in kind any materials required to fully restore this area of the wind tunnel to pre-project like conditions. This includes but is not limited to: Metal Panels, Concrete, Masonry, Finishes (e.g. paints, coatings) and other miscellaneous architectural components

2. Refrigeration Plant Building Exterior and Interior

    a. The conceptual new building floor plans shall be used as the initial layout to be developed further during the design. Refer to the Replacement of the Refrigeration Plant for the Icing Research Tunnel, Building No. 9 Concept Study - Option 3 information.

        The floor plan shall permit placement for future equipment. Provide space for the equivalent of (2) additional refrigeration units (i.e. compressors) adjacent to the general refrigeration equipment area. Note that this is in addition to any maintenance or staging area that is required.

    b. The new Refrigeration Plant building shall account for the existing conditions and provide the proper access (minimum three foot clearance) for maintenance of system and components that will remain intact (e.g. services along the exterior of Building No. 9, site adjacent pipe racks) in the establishment of the building setbacks.

    c. All finishes and materials shall best match the currently in place Building No. 9. The materials of construction shall be compliant as a minimum with the NASA Facilities Design Policies and Guidelines.

DRAFT

d. All color schemes shall be presented to and approved by the NASA Project Architect.

e. All signage and tags (e.g. rooms, building, safety, panels, equipment, etc.) shall be supplied by Contractor and formatted as defined by applicable Code and/or NASA GRC.

f. The building classification shall be based on the Facility Industrial Group unless determined by design that this classification needs to be redefined with the acknowledgement of NASA.

g. Refrigeration Plant shall be based on an occupancy load of (10) ten persons in addition to the equipment and the Control Room shall be based on an occupancy load of (5) five persons.

h. Facility Restroom shall be unisex and contain as a minimum one (1) of each: lavatory sink with metered faucet, water closet with low flow flush valve, mirror, paper towel dispenser, soap dispenser, toilet paper dispenser. These elements shall be consistent with the current NASA GRC custodial contract for use and supplies.

i. The Control Room and Restroom will be constructed in such a fashion as to maintain a background (office space) noise level of 50 dBA TWA or less in order to provide isolation from the anticipated high noise refrigeration equipment areas.

j. The Refrigeration Plant (Building No. 170) will be constructed in a such a fashion as to maintain a background (exterior or outdoor) noise level of 79 dBA TWA or less in order to provide isolation from the anticipated high noise refrigeration equipment and the surrounding facility structures such as Building 7, 9 and 11 including pedestrian traffic.

k. The Control Room shall be provided with a minimum 3 feet high by 8 feet long fixed window made of tempered, fire rated safety glass and able to view the Main Refrigeration Equipment Area (e.g. compressors) unobstructed. The window shall be placed at 3-1/2 feet above the Control Room finished floor for viewing outside into the Refrigeration Equipment Area.

3. Doors

a. Provide doors for access to the main building and associated rooms as required by applicable Codes and NASA. Two means of egress minimum for any space shall be included.

i. The Refrigeration Plant Control Room shall be accessible directly from an exterior door so as to allow personnel to enter this space without having to travel through the anticipated high noise equipment area.

b. All doors shall be provided with components and hardware consistent with other NASA GRC buildings. Coordination with the NASA Project Team in regards to the required door and hardware systems (e.g. locking cores, standard products) is required. Information on the door and hardware to be supplied and installed by the Contractor and by others, such as NASA Support Service Contractors

DRAFT

(SSCs), shall be forwarded to the designers by the Preliminary Progress Review for incorporation and execution of the subject work.

i. All exterior doors shall include the above and in addition must be integrated with the Lenel Access Control system hardware and components that are designated by the NASA project team with GFI documents to be provided to the Contractor.

c. Two (2) overhead coiling doors, electrically driven with a manual operator in case of power failure, shall be provided and installed on the new building to facilitate the installation and maintenance of the refrigeration equipment from Ames Road between GRC Buildings No. 7 and 9 and another access point from the Building No. 7 and 11 courtyard. Size of each door shall be a minimum of no less than two (2) feet larger than the largest piece of equipment to be placed into the building in height and width.

d. Provide awnings over exterior doors to protect the general door area from weather as applicable.

4. All new work shall incorporate the Americans with Disabilities Act (ADA) compliant installations for elements such as restrooms, water fountains, fire alarm system, door entrances & egresses and other similarly defined functions. Provide appropriate signage for all ADA applications whether interior or exterior to the project site.

E. Survey / Civil

1. Provide the requisite geotechnical testing to verify soil characteristics at the site and design of the civil systems to meet the design requirements.

2. Pavements and Parking Areas

a. Pavements shall be concrete, asphalt or Government approved alternate for roadway, driveway and parking areas. The pavement details shall conform as a minimum to the NASA Facilities Design Policies and Guidelines for materials and material thicknesses. The load capacity of the pavement area around the building shall be AASHTO H-20 or greater to accommodate the heaviest equipment load (e.g. compressor unit and/or fluid load/unload). Pavement thickness shall be verified with the geotechnical engineering report and is subject to approval by the NASA Project Civil Engineer.

b. Establish new parking and access spaces around the new building. A minimum of five (5) new parking spaces shall be provided including provisions for a truck loading and off-loading station related to the refrigeration system fluids.

c. Striping of the new spaces shall be complaint with NASA Facilities Design Policies and Guidelines and ADA requirements.

d. Concrete wheel stops are required per the discretion of the NASA Project Civil Engineer.

e. Pavement removal / restoration limits shall be approved by the NASA Project Civil Engineer

DRAFT

3. Sidewalks and Curbs

   a. Provide concrete sidewalks per NASA Facilities Design Policies and Guidelines or as a minimum 4 inch thick with welded wire fabric

   b. Curb layout and installation details shall be reviewed by the NASA Project Civil Engineer.

4. Landscaping shall be consistent with the surrounding structures. Open unpaved areas shall be graded and seeded as required.

5. Grading

   a. Existing grade for the proposed project site is per the established topography. The Contractor shall have a professional surveyor verify the existing topography. The Contractor shall provide updated grading plans with contour intervals of one (1) foot and spot elevations at a minimum of every fifty (50) feet, high points, low points, doors and critical elevations. The Contractor shall design and install systems to provide positive drainage away from new and/or existing structures, equipment, storage yards, etc.

6. Storm and Sanitary Sewers

   a. Provide gravity sewer connections from the new structure to the existing sanitary and storm systems. Any force mains must be approved by the applicable NASA System Manger. Design shall review capacity of any existing system and incorporate findings into the implementation of the new and/or modified installations.

7. Storm Water Management

   a. Site shall provide water quality for a minimum 20% of site drainage area.

   b. Detention analysis shall be completed to ensure compliance with the OEPA General Permit.

8. Infrastructure Utilities

   a. Required utility services for the new work shall be sized and installed to support all designated users and systems. Tie point locations shall be coordinated with and approved by NASA with the established FCR approval process.

9. Provide chain link fence including barbed wire, guardrails and bollards for the protection of equipment, components and areas from personnel access, motor vehicles and support equipment (e.g. forklifts, heavy duty trucks, etc.) as applicable.

F. Structural

1. Provide the requisite geotechnical testing to verify soil characteristics at the site and design of the foundation system(s) to meet the structural design requirements.

2. Structural design shall be in accordance with the codes specified in this document or applicable document by reference.

DRAFT

a. Seismic Zone, Wind Load, et al. shall be per Ohio Building Code and/or NASA Facilities Design Policies and Guidelines whichever is more stringent.

b. The first floor (e.g. main refrigeration equipment level) shall be defined as grade level and be a concrete slab with the appropriate equipment rated design loads or as a minimum 300 pounds per square foot.

c. Any subgrade level (e.g. basement) shall have cast-in-place concrete walls and floor slab. Size and layout will be dependent on piping and equipment design configurations developed during design.

d. The building's superstructure shall be a steel skeleton with steel columns to support an overhead crane runway, steel roof framing and other required components. The design shall maximize the usable equipment floor space, provide a building height as demonstrated by the design for equipment maintenance with the overhead crane and shall not place any superstructure supports that could obstruct the accessibility of the main and/or maintenance equipment areas.

3. Structural considerations in support of architectural, mechanical, and electrical shall be included. Access holes, penetrations, equipment pads, and equipment and pipe supports will need to be provided both within the building and between the new building, the existing Building No. 9 and the IRT facility as applicable.

4. Removal and installation of the Icing Research Tunnel Heat Exchanger will require the Contractor to replace in kind any materials required to fully restore this area of the wind tunnel to pre-project like conditions. This includes but is not limited to: Structural steel work, platforms, ladders and other miscellaneous structural components.

5. An overhead travelling bridge crane shall be provided. The crane shall have a basis of design and installation utilizing Crane Manufacturers Association of America (CMAA) Specification No. 70 for Class C service. The installed crane and associated components shall be capable of performing a "critical lift" as defined by NASA.

a. Capacity shall be a minimum of one (1) 15 Ton Main Hoist and be capable to lift the heaviest single piece of maintainable equipment as required.

b. The crane shall be operated primarily by a wireless (radio) remote controller and secondarily by local pendant control. Provide two (2) remote controllers with the crane.

i. The crane remote operated wireless controller shall provide the following controls as a minimum:

1. Bridge control forward/reverse
2. Main hoist control up/down
3. Trolley control - Forward/reverse
4. Emergency stop
5. On/Off key switch
6. Battery Test button and indicator.

c. Provide limit switches or other NASA approved suitable devices to define and limit the extent of travel. Range of movement shall be established to reach all serviceable equipment and equipment staging / maintenance areas.

d. Crane shall be electrically driven with variable speed motors utilizing an electrical "hot" rail system

G. Mechanical / Process

1. All mechanical (institutional and process) designs and installations shall be in accordance with the codes specified in this document, the NASA Facilities Design Policies and Guidelines and/or applicable document by reference.

2. Heating, Ventilating, Air Conditioning and Refrigeration (HVAC&R)

   a. Building and other associated interior areas shall be heated during the winter (October 15 through April 15) with general ventilation in the summer (April 16 through October 14). The heat load generated by the refrigeration equipment and system shall be included in the design of the general ventilation.

   b. Heating system fuel or source may be steam, natural gas or hydronic based systems. Coordination with the NASA Project team and NASA GRC Systems Management for proposed additions to existing system consumption will be required during the design and facility change request (FCR) process.

   c. Ventilation design and installation shall be based on the type and quantity of selected refrigerants and ASHRAE Standard 15-2007 *Safety Standard for Refrigeration Systems*. A refrigerant detection system shall be required and incorporated into the sequence of operation of the ventilation system and facility controls as applicable.

   d. The Refrigeration Plant Control Room and Facility Restroom shall be heated and air conditioned. Minimum conditions for heating and cooling are 70 ± 10 deg F with a 50% ± 10% relative humidity. All functions shall be tied to the facility Energy Management & Control System (EMCS).

3. Plumbing

   a. Domestic Water, Hot Water and Sanitary piping for new restroom, drinking fountains, hose bibs, utility sinks, floor drains, safety shower/eyewash unit(s) with tepid water system utilizing tankless water heater technology, etc. shall be provided. Backflow prevention shall be included and installed as required by Code, fire protection systems and NASA requirements. Provide as a minimum one (1) isolation valve at each installed component for maintenance and removal purposes.

   b. Provide roof and building perimeter drainage systems. These systems shall drain to the storm sewer system. A siphonic system shall be designed and installed.

4. Fire Protection

   a. The new building and other associated defined areas shall be designed for and installed with a wet pipe sprinkler system. The system shall contain, but not limited to, all piping, valves, test lines, drains, etc. for a complete system. The design shall be by a State of Ohio licensed design professional and per the NASA *Safety Standard for Fire Protection* (NASA-STD-8719.11 Revision A). Include an exterior 5" Storz Fire Department pumper truck connection in a location suitable

(e.g. Ames Road side of the building) for fire responders to access with no obstruction and minor response time. All designs shall be reviewed and approved by the NASA GRC Authority Having Jurisdiction (AHJ) prior to installation.

5. Process and Institutional Systems

   a. Coordination between the Contractor and NASA Project Team with the NASA GRC Pressure Systems Office (PSO) shall be required related to the certification of all applicable systems.

   b. Removal and installation of the Icing Research Tunnel Heat Exchanger will require the Contractor to replace in kind any materials required to fully restore this area of the wind tunnel to pre-project like conditions. This includes but is not limited to: Piping, valves and other miscellaneous mechanical components including pipe supports and insulation systems

   c. Piping, valves and other inherent system components provided shall be per the associated system specification (existing or as developed), by contract and/or applicable NASA GRC requirement for the following but not necessarily limited to systems:

      i. Cooling Water
      ii. Service Air
      iii. Chilled Water
      iv. Hot Heating Water
      v. Natural Gas
      vi. Steam
      vii. Refrigeration

      Valves for steam & steam condensate service shall be carbon steel

   d. Provide full line sized connections for any proposed future equipment and devices on associated system mains and/or branches. These future connections shall have an isolation valve and be blanked appropriately.

   e. Provide as a minimum one (1) full capacity stand-by pump for each fluid flow application. Pumps shall be capable of operating in a Duty/Standby manner.

   f. Provide service air throughout the refrigeration plant. Provide one (1) service drop every 20 feet for user equipment connections and in addition to the installed project equipment and systems need.

   g. Thermal insulation systems shall be provided. Aluminum jackets for exterior (outdoor) applications shall be required. PVC or other fabric / mastic types are <u>not</u> acceptable for exterior applications.

   h. All equipment, piping, valves, and joints shall be installed such that no forces or strain are exerted to surrounding equipment or systems. Proper flexible connections shall be designed with engineering analysis such as pipe stress calculations (e.g. CAESAR II). “Victaulic” type connections are <u>not</u> permitted.

   i. The refrigeration system fluids truck loading and off-loading station shall be plumbed from the applicable system and located on a fully accessible side of the building (e.g. Ames Road driveway) to allow the loading/off-loading operations to

effectively deliver or retrieve materials such as refrigerants and secondary coolants for maintenance and operations of the refrigeration plant.

j. NASA GRC's on-site maintenance contractor (Call Henry, Inc.) shall be responsible for the opening and closing of all valves in existing systems, which will be scheduled through the NASA Project Team as needed. The Contractor is not permitted to operate existing valving.

H. Electrical

1. All high and low voltage electrical systems and equipment (i.e., lighting, motor control centers, power panels and transfer switch, etc.) shall meet or exceed the NEC and NASA Facilities Design Policies and Guidelines.

2. The Electrical Area Classification is anticipated to be defined as General Purpose. The Contractor shall evaluate the project requirements and provide a classification that best suits those requirements.

3. Removal and installation of the Icing Research Tunnel Heat Exchanger will require the Contractor to replace in kind any materials required to fully restore this area of the wind tunnel to pre-project like conditions. This includes but is not limited to: circuits, grounding, instruments, control loops and other miscellaneous electrical components

4. Power

   a. Design and install new services to support all systems, equipment and building electrical loads including the proposed future equipment plus 30% spare capacity.

      High voltage power distribution shall be 2400 volts AC, 60 Hz, 3 phase. High voltage power shall be routed via underground concrete-encased duct banks. Overhead distribution shall not be used. The Government anticipates that the project will inquire about system capacity from either Substation E located at Building 9 and/or Substation B located adjacent to Building 12 to fulfill project requirements.

      The proposed route for high voltage distribution shall be via the GRC power manhole system including the addition of any new manholes and modifications to existing manholes. The design shall determine the best routing and shall include cable pulling plans complete with calculations verifying splice locations and pulling directions.

      The low voltage electrical distribution system shall be 480/277 volts AC, 60 Hz, 3 phase 4 wires and 208/120 volts AC, 60 Hz, 3 phase 4 wires. All circuits shall have an equipment ground wire. Provide panel boards, Motor Control Center (MCC) and/or motor starters as necessary. Low voltage equipment shall be Square D.

      All wire, equipment bus and transformer windings shall be copper.

      Provide load study, short circuit coordination study and arc flash calculations for all electrical distribution equipment.

DRAFT

Provide and install arc flash labels on high voltage and low voltage equipment. Arc flash labels shall follow the same developed GRC standard.

b. Redundant power shall be designed and installed for the facility control systems and institutional (building) loads. NASA defines redundant power as (2) two independent sources of power that must be connected (wired) in a fail over no loss of power mode from the one designated as primary to the one designated as the secondary. The no loss of power mode shall provide power to the control equipment (e.g. computers, PLC/DCS and I/O) and building circuits without interruption (i.e. no rebooting of systems) to the connected elements.

c. The Refrigeration Plant Control Room shall have a separate receptacle for every installed 120 volt equipment item and shall provide 50% as spare available.

d. The number of circuits available shall exceed the minimum number required per NEC by a minimum of 50%.

e. Lighting and receptacles shall be on separate circuits (i.e. lights and receptacles shall <u>not</u> be on the same breaker)

f. Provide two (2) 60 amp weld receptacles with locations to be approved by NASA during the design of the refrigeration plant facility floor layout.

g. Provide and install new electrical IQ Data Plus meter(s) and IPONI module(s) at the building's service entrance(s). Provide and install termination box, cable and conduit system necessary to tie in the new electrical meter(s) to the existing IQ Data System IMPACC Network and to enable the new electrical meters to communicate with the existing electrical meter monitoring computer reside in the EMCS room in Building 12. Cable shall be twisted pair #19 copper. Reference existing IQ Data System IMPACC Network drawing SK-021795-QU for existing cable routing path.

3. Grounding

a. Provide grounding of building and equipment systems including lightning protection as per NEC and NASA Facilities Design Policies and Guidelines.

b. Provide isolated grounding of instrumentation such as thermocouples and strain gages, etc. mounted on structures especially non-metallic surfaces. Include additional protection from an accumulation of static potential by draining the charge at an isolated metallic sleeve or guard surrounding the sensing element as applicable.

c. Provide galvanic cathodic protection and test station(s) for all new steel underground piping.

4. Fire Detection and Alarm

a. The new building Siemens ALS3 Fire Alarm System installation shall include a fire alarm control panel, auxiliary panel, control modules, graphic panel, booster power supplies, detectors, manual pull stations, alarm notification appliances, hold open devices, and tie-ins to the NASA GRC fire alarm master system. Include fire alarm with voice evacuation where required and into the Fire Alarm Control Panel. The complete installation shall result in the ALS3 panel residing on

an active network and having all of its alarms forwarded to Emergency Dispatch in GRC Building 14.

b. All control valves in the sprinkler system shall be provided with supervisory switches. Switches will alarm when a valve is not in its normal position.

c. Provide water flow alarms apparatus for the system. Alarm device shall be a listed alarm check valve with all the necessary attachments required to give an alarm. Flow alarm devices shall be installed per NFPA.

5. Refrigerant Detection System

a. A MSA Chillgard RT refrigerant detection system or approved equal complete with local audible/visible notification appliances and tie-in to the NASA GRC master system by the Contractor shall be required.

6. Interior and Exterior Lighting

a. Provide all interior lighting for the new building and associated areas. All interior lighting shall be energy efficient type lighting.

b. Lighting control within the Refrigeration Plant Control Room shall be provided by more than one circuit and configurable as three (3) dimmable levels (Full On, 50% On, Full Off). The lighting layout shall minimize or best eliminate glare on monitors and computer screens.

c. Provide building exterior perimeter lighting with new energy efficient lighting following LEED guidelines as practical. Controls for new perimeter lighting shall be integrated into the facility EMCS by the Contractor.

d. Locate and install new emergency and exit lighting systems where required to meet Code and compliant with NASA requirements. Exit lighting shall be a self-luminous style, Isolite, model 2040 or approved equal. Emergency lighting shall be Emergi-Lite, model JSE18-2AD (no remote capability) and model JSE27-2AD (remote capability) or approved equals.

7. HVAC&R

a. Provide duct detectors, both smoke and carbon dioxide, to new air handling equipment as applicable.

b. Controls and I/Os for new equipment and components shall be integrated into the facility EMCS or applicable control system by the Contractor.

I. Instrumentation, Controls and Facility Operations

1. A Concept of Operations (ConOps) shall be supplied describing the characteristics of the proposed systems from the viewpoint of the individuals who will use the systems. The ConOps shall be used to communicate the quantitative and qualitative system characteristics to all project stakeholders. The following but not necessarily limited to items shall be provided in the project's ConOps:

DRAFT

a. Statement of the goals and objectives of the systems

b. Strategies, policies, and constraints affecting the systems

c. Organizations, activities, and interactions among participants and stakeholders

d. Clear statement of responsibilities and authorities delegated

e. Outline specific operational processes for activating the systems

f. Processes for initiating, developing, maintaining, and retiring the systems

2. The Refrigeration Plant Control Room shall have a minimum of two (2) operator stations with one (1) Operator station designated as capable of making engineering changes to the control system.

   The following items shall be incorporated into the design and construction:

   a. An operator's station shall include a desk with a minimum of 36 inches wide by 48 inches long available level surface, a CPU, a minimum 22 inch LCD monitor, a keyboard and a mouse.
   b. All operator stations shall be compliant with all NASA and GRC Information Technology (IT) requirements and capable to facilitate, communicate and support the remote and local control and operation of the new refrigeration system, IRT Control system and/or other designated systems. Refer to NASA-STD-2804M *Minimum Interoperability Software Suite* and NASA-STD-2805M *Minimum Hardware Configurations* in regards to the NASA IT minimum requirements.
   c. Engineering changes are defined as but not limited to altering, adding or deleting logic and graphics for the system, compiling the programming language and downloading to itself and other connected stations
   d. All software packages shall be licensed. The Contractor shall provide the facility with a minimum of three (3) seat licenses of each supplied software package for use.

3. All equipment except computers and monitors shall be rack mounted and include the following characteristics:

   a. Racks compatible and configurable with the selected equipment shall be supplied.
   b. Racks shall stand no higher than 75 inches tall.
   c. Front of racks shall face out into the Control Room main space / area.
   d. Rear of racks shall be located along a wall with adequate space (minimum of 3 feet) behind to provide for clearance from the wall and the rear access / door plus 12 inches.
   e. If more than one rack is to be mounted next to each other, they shall be in line and the rack fronts shall be flush
   f. Individual power strips, minimum two (2), shall be supplied with each rack
   g. Electrical grounding of the racks shall be required with one or more bus bars
   h. Rack access doors shall be lockable
   i. Integral cooling fans shall be provided

DRAFT

j. Communications shall not be co-mingled due to security requirements (e.g. a dedicated communications equipment only rack)
k. Racks to be on equipment pads
l. Allocate and designate spaces to house the various distinct control systems (e.g. facility control, PLC) of the facility.

J. Communications

1. The design and construction shall rough in (conduits, junction boxes, cover plates, etc.) for the designated service drops as required. The installation of the new network cabling shall be coordinated with other construction work. Minimum quantities for the Control Room communication elements shall be four (4) telephone & data drops with one (1) on each wall which will provide for up to three (3) telephones and three (3) computers.

2. New network communications will be installed for new room areas based upon the approved floor plan layout. Communications shall include phone, computer drops, LINK, and any other necessary communication systems. The actual work (network cabling, network switches, installation, testing, documentation, etc.) will be accomplished through a task to a NASA SSC under the Outsource Desktop Initiative (ODIN) contract. ODIN supports and maintains all IT and communication systems at NASA GRC. The Contractor shall coordinate their required efforts with the NASA Project Team and ODIN.

3. An Intercom and Paging system shall be provided. The system shall be capable of two-way communications between each user selectable station and/or globally. Four (4) Stations shall be spaced around the refrigeration plant building with 25 feet of headset cable. The station shall be capable of receiving a plug-in type of headset with a 25 foot long cable. A headset and cable shall be provided for each station by the Contractor. The system shall have annunciation horns placed throughout the building to facilitate paging in all areas. The stations, horns, headsets and cables shall be designed to work within the expected environment. There shall be a minimum of one (1) station located in the Control Room. The Contractor shall integrate the Refrigeration Plant system with the existing IRT system as applicable. The integrated system must be capable of being isolated from the IRT system through verifiable physical separation (e.g. a connector that can be removed and stored under lock and key). The base system shall be expandable with a minimum of five (5) additional stations.

4. The Contractor shall install conduits between the Refrigeration Plant and the IRT Control Room for a video surveillance system at the Refrigeration Plant. The supplied conduits shall include service drops at both ends and be sized to accommodate cables for a minimum of three (3) camera units.

5. Patches into existing systems shall be by the Contractor. Locations shall be determined during design and require coordination with the project, ODIN and/or other system stakeholders.

6. The proposed route for communications shall be via the GRC telephone manhole (TMH) system including the addition of any new manholes and modifications to existing manholes needed to fully install routings for applicable systems. The design shall determine the best routing and shall include cable pulling plans. The Government anticipates that TMH # 7 at Ames Road will be utilized in order to have

DRAFT

the communication systems of the new building routed to and integrated with the Center's main systems. Other TMHs located within the Building 7, 9 and 11 complex shall be verified regarding their use to route communication systems between the new building and IRT.

Communications shall be routed via underground concrete-encased duct banks. Overhead distribution shall not be used.

K. Facility Activation / Commissioning

1. Activation as defined by NASA includes the installation of ground support equipment, the integration and checkout of combined facility and equipment systems, installation of non-collateral equipment, demonstration and acceptance of an operable facility.

2. Validation as defined by NASA is the verification that the equipment and/or system meets the operational needs of the Government. It is part of the turnover process from the designer to the Government.

3. Facility commissioning is defined as the systematic process of ensuring that the facility's complex array of sub-systems and systems is designed, installed, and tested to perform according to the design intent, requirements, and the facility owner's operational needs. The following verification and test activities, when combined, will establish a "commissioned" facility:

    a. The Contractor shall provide a detailed System Validation Plan, submitted to NASA for approval, which reflects the listings of all systems, subsystems, components and procedures that have been provided for this project. The following shall be included in the Contractor's developed plan:

        i. Develop check lists prior to conducting tests. These check lists shall be used for component, sub-system and system level demonstration tests. Where applicable, specific consideration shall be given to the safe operation of systems and for the safety of personnel and property as specified by the Glenn Safety Manual and facility hazards analyses (FHAs).

        ii. The systems are installed and functioning in accordance with contract drawings and documents, including local and remote controls. These may include P&ID's, plans, specifications, vendor prints, installation instructions, and other documents as appropriate.

        iii. The required documentation is obtained for each item. Relevant documentation (i.e. operating manuals, maintenance procedures, standard operating procedures (SOPs), and record drawings) are referenced here. The documents included are those that are required to operate and maintain the system in its commissioned state. The stakeholder responsible for maintaining the documents are also identified.

        iv. Verify that all manufacturer set points and limits function properly

        v. Critical instruments have been calibrated in accordance with contract documents. Demonstrate that the NASA GRC standard requirements for

DRAFT

calibration have been met and that all records for calibration are maintained.

vi. Instruments and equipment shall be properly identified. The identification shall include the tag number and P&ID drawing number as a minimum. The identification may further include manufacturer and model number, serial number, motor HP and RPM for each device per contract documents.

vii. Critical materials of construction match the contract documents.

viii. Contractor to verify all equipment, piping, valves, and joints are installed such that no forces or strain are exerted to surrounding equipment or systems. Proper flexible connections have been installed per contract documents and validated with engineering analysis such as pipe stress calculations (e.g. CAESAR II).

ix. Initial cleaning, pressure testing, and other specified pre-operational tests have been completed and documented according to contract documents prior to request for final commissioning.

x. Utility tie-ins are verified.

xi. All electrical and control wiring labeling have been verified. Wiring shall be properly identified on both ends with the system information. Each wire shall have a unique number. The number shall be on each end and prominently displayed.

xii. Control system I/O and electrical point-to-point have been verified and documented. All outputs from the refrigeration control system and all inputs to the refrigeration control system shall indicate the correct values.

xiii. Leak testing of ductwork has been conducted in accordance with the contract documents.

xiv. The building and refrigeration system controls field installation has been checked out and documented by the Contractor, including loop checks and calibration of all critical loops, and failure mode testing.

xv. The building HVAC automation system is a direct digital control system and contains all points and loops referenced in the contract documents as appropriate to monitor and control the facility.

xvi. Verify installation of all instrumentation, monitoring devices, and adherence to installation instructions, plans, and vendor prints for the facility systems.

xvii. Verify communication between the Contractor supplied control system with the IRT facility Ovation system.

b. Equipment and sensors necessary for commissioning and verification check-out of the facility shall be provided by the Contractor. Provided instruments shall be calibrated and certified.

c. Signal conditioning shall be provided by the Contractor.

DRAFT

4. The Contractor shall provide manufacturer's representatives for commissioning of the major new equipment and hardware systems at the IRT facilities.

5. Coordination between the Contractor team and NASA Project Team will be required to facilitate the system connections and startup of the various institutional and process systems at various milestones through the life cycle of this project.

6. After the Contractor's System Validation, the systems shall undergo a NASA Integrated Systems Test (IST) that shall be performed by the Contractor and IRT Operations Team. The IST is an orderly testing sequence selectively followed to verify each piece of equipment and/or system is ready to be safely operated. The Contractor shall provide engineering, technical and/or skilled support and lead the effort to verify the Refrigeration Plant meets the performance requirements and specifications as indicated in this and other applicable documents. NASA will provide assistance in the verification of the Aero specifications described in Appendix A of the Project Requirements Document such as the velocity profile, turbulence intensity profile and flow angularity.

L. Special Constraints

1. The final design, construction and activation shall be completed within 14 months (tentative completion date 04 / 30 / 2011). The completion schedule will be heavily influenced by the Contractor's planning and successful execution of the requirements, IRT test program schedule, the installation of the new heat exchanger and system switchover from the existing refrigeration plant in Building No. 9 to the newly installed refrigeration plant in Building No. 170.

2. It is intended that all work, except tasks related to the heat exchanger installation, will be completed while the Icing Research Tunnel maintains an active test program. Planning may require second shift work and/or protection of areas not directly involved in individual construction line items. The disruption, tie in and restoration of utilities and services must be carefully scheduled, planned and approved by the Government to minimize the impact to the buildings (e.g. IRT, Building No. 9 and surrounding) operations. Government equipment must be protected from damage during the construction.

3. The Contractor shall perform investigations throughout the facilities, as required, to verify existing conditions against existing drawings. The Contractor shall report all discrepancies found to the COTR prior to implementation of field construction.

4. During the course of the installation work at the project site, at IRT and at Building No. 9, existing utilities and systems shall require safing (from a state of readiness to a safe condition), abandoning in place and/or restored. These items are required to be isolated and in many cases physically separated from their associated systems. Examples of the system safing and/or restoration shall include but is not necessarily limited to de-energizing, lifting and pulling of power cables/wires to their source, capping/plugging of pipes, conduits and ducts to their respective mains or primary junctions and re-establishing any functional systems that are disturbed during construction.

   Existing Refrigeration Plant and IRT systems shall have their work point boundaries determined by the Contractor and approved by the Government. NASA will provide limited support to "make safe" the designated system elements for the Contractor to perform their work. The Contractor shall be responsible to verify the condition of the system prior to working on them, properly evacuate and dispose of any system materials (e.g. refrigerants, wiring, fluids, etc.), disconnect and/or maintain the integrity of the remaining system as discussed above in the preceding paragraph. The Contractor shall remove

these designated elements in their entirety (e.g. specific exterior and trench piping along Building no. 9). Major equipment components are not part of the removal intent (e.g. existing compressors in Building No. 9).

5. Building availability varies and the Contractor shall not interfere with IRT capabilities and operations for other test programs during project implementation. It is understood that the IRT's current capabilities will be idle / offline during the new heat exchanger installation. Coordinated efforts are required regarding the installation schedule of the new heat exchanger and associated system work. The IRT facility anticipates that the downtime shall be kept to a minimum with a tentative duration of four (4) months. The Contractor shall provide their estimated duration and schedule of the IRT downtime at the initiation of the project's site work to facilitate IRT test program planning. As changes to the heat exchanger installation task(s) duration and schedule occur, the Contractor shall notify the COTR within ten (10) working days of these adjustments so that NASA can continue its planning for the resumption of test programs at IRT.

6. All facility access to the equipment, systems and building areas shall be coordinated between the COTR and the Contractor and shall include but is not necessarily limited to the following:

    a. Parking will be limited during on-site construction due to the confined access around the project site. Coordinate designated locations for parking with the approval of the COTR.

    b. Fencing shall be required to define a safe zone around the project site but allow access to specified locations and to provide pedestrian and vehicle safety as well as control site staging areas for equipment mobilization, scrap load-out, temporary material staging, and Contractors' temporary facilities. The fencing boundaries shall be established by a representative site plan and with the approval of the COTR.

    c. Contractor's temporary facilities (e.g. trailers, restrooms, etc.) layout will require the approval by the COTR prior to their mobilization at the project site.

DRAFT

ATTACHMENT 4.02

LIST OF REFERENCED STANDARDS AND ORGANIZATIONS

American Association of State Highway and Transportation Officials (AASHTO)

American Concrete Institute (ACI)

American Institute of Steel Construction (AISC)

American National Standards Institute (ANSI)

American Society of Heating, Refrigeration and Air Conditioning Engineers (ASHRAE)

American Society of Mechanical Engineers (ASME)

American Society for Testing and Materials (ASTM)

American Welding Society (AWS)

Crane Manufacturers Association of America (CMAA)

Environmental Protection Agency (EPA)

Illuminating Engineers Society (IES)

Institute of Electrical and Electronics Engineers (IEEE)

International Building Code (IBC)

International Plumbing Code (IPC)

National Electrical Manufacturers Association (NEMA)

National Electrical Code (NEC)

National Electric Safety Code (NESC)

National Fire Protection Association (NFPA)

Ohio Building Code (OBC)

Ohio Environmental Protection Agency (OEPA)

Ohio Department of Health (ODH)

Ohio Department of Natural Resources (ODNR)

Ohio Department of Transportation (ODOT)

Occupation Safety and Health Administration (OSHA)

U. S. Green Building Council (USGBC)