CONCEPT STUDY

Final Report

REPLACEMENT OF REFRIGERATION SYSTEM FOR THE ICING RESEARCH TUNNEL (IRT), BLDG. 9

NASA Glenn Research Center
21000 Brookpark Road, Cleveland, Ohio 44135

Prepared By:

Collaborative Design, Ltd.

AERO SYSTEMS ENGINEERING

SieTech

URS

June 14, 2007

Table of Contents

1. Introduction

A. Scope of Work 1
B. Plant History 1
C. Plant Issues 3
D. Ice Erosion Issue 4
E. Goals of Study 4

2. Discussion

A. Data 5

Overall Performance
Pump Performance
Orifices
Heat Exchanger
Fluids

B. Design Assumptions 14

General Design Discussion

C. Compressor Plant Option 1 16

General Discussion
Selection Criteria
Required Changes
Heat Exchanger Modifications
Equipment & Mechanical Piping
Environmental & Safety Related to Refrigerants
Controls
Energy Efficiency
Reliability
Operation & Maintenance
Impact to Research
Design Details
Recommended Changes
Pros/Cons
Benefits
Limitations
Building Requirements
Site
Structural
HVAC & Plumbing
Electrical
Initial Costs & O&M Costs
O&M cost sheet
Initial cost estimate
Project Schedule
Refrigerant Data
Compressor Data
Calculations
Drawings for Option 1

D. Compressor Plant Option 2 24

General Discussion
Selection Criteria
Required Changes
Heat Exchanger Modifications
Equipment & Mechanical Piping
Environmental & Safety Related to Refrigerants
Controls
Energy Efficiency
Reliability
Operation & Maintenance
Impact to Research
    Design Details
    Recommended Changes
Pros/Cons
    Benefits
    Limitations
Building Requirements
    Site
    Structural
    HVAC & Plumbing
    Electrical
Initial Costs & O&M Costs
    O&M cost sheet
    Initial cost estimate
Project Schedule
Refrigerant Data
Compressor Data
Calculations
Drawings for Option 2

E. Compressor Plant Option 3 35

General Discussion
Selection Criteria
Required Changes
Heat Exchanger Modifications
Equipment & Mechanical Piping
Environmental & Safety Related to Refrigerants
Controls
Energy Efficiency
Reliability
Operation & Maintenance
Impact to Research
    Design Details
    Recommended Changes
Pros/Cons
    Benefits
    Limitations
Building Requirements
    Site
    Structural
    HVAC & Plumbing
    Electrical

Initial Costs & O&M Costs
O&M cost sheet
Initial cost estimate
Project Schedule
Refrigerant Data
Compressor Data
Calculations
Drawings for Option 3

F. Site Environmental Concerns 45
G. Ice Erosion 45
H. General Structural 46

3. Summary/Conclusion 47

Appendices

A. Calculations
AIAA 2002-0740 Performance Assessment of a new Type of Heat Exchanger for Wind Tunnels

B. Test Data

1. Introduction

A. Scope of Work

The purpose of this study is to look at alternative refrigeration systems that could replace the existing Icing Research Tunnel (IRT) refrigeration system and meet the performance requirements of the recently replaced heat exchanger and review the ice erosion problem.

The study will provide three alternative refrigeration systems and address the following items:

Physical size and possible site locations
Identify Heat exchanger modifications required
Initial costs and O&M costs
Pros and Cons of each alternative
Automated controls
Environmental Impact related to refrigerant to be used
Safety Impact related to refrigerant to be used
Reliability
Energy efficiency
Impact to research during implementation of the project

B. Plant History

The NASA Icing Research Tunnel (IRT) was constructed in the 1940's and began operation in 1944. The refrigeration plant was designed by the Carrier Corporation and was considered state of the art (or better) at the time. The plant originally consisted of 14 1500HP centrifugal compressors and was designed to be able to be used by either the IRT or the neighboring Altitude Wind Tunnel.

During the initial startup and ensuing years of operation considerable modifications have been made to the overall plant operation.

1. At some point the system was modified by removing the Float Tank after the liquid pumps. This component was originally designed to remove any vapor created in the pumps and ensure 100% liquid quality. Without the intended operation of this component, there is a possibility of some refrigerant vapor reaching the inlet to the heat exchanger (HX) (and probably was to a lesser extent even as designed).

2. The system was originally designed with multistage economizers to reduce the temperature of the liquid refrigerant before introduction into the flash cooler.

At some point during the operation it was determined that these units were not properly operating and they were disabled. This has the effect of introducing warm refrigerant liquid directly into the flash cooler. A significant portion of this refrigerant must flash to vapor to achieve saturation. All of this additional vapor must flow through the suction of the compressors reducing the available tonnage for actual process cooling.

3. The system originally had a large "W" HX with angled vertical tubes and turbulators. This HX was replaced and the C-D leg of the tunnel was rebuilt. The new HX has many differences including being inline with the airflow, having horizontal tubes, fixed flow balancing orifices, significantly more volume, no in tube turbulators, different fin and tube configuration, and drastically different air and fluid flow characteristics.

APPENDIX A
HEAT EXCHANGER PERFORMANCE CURVES

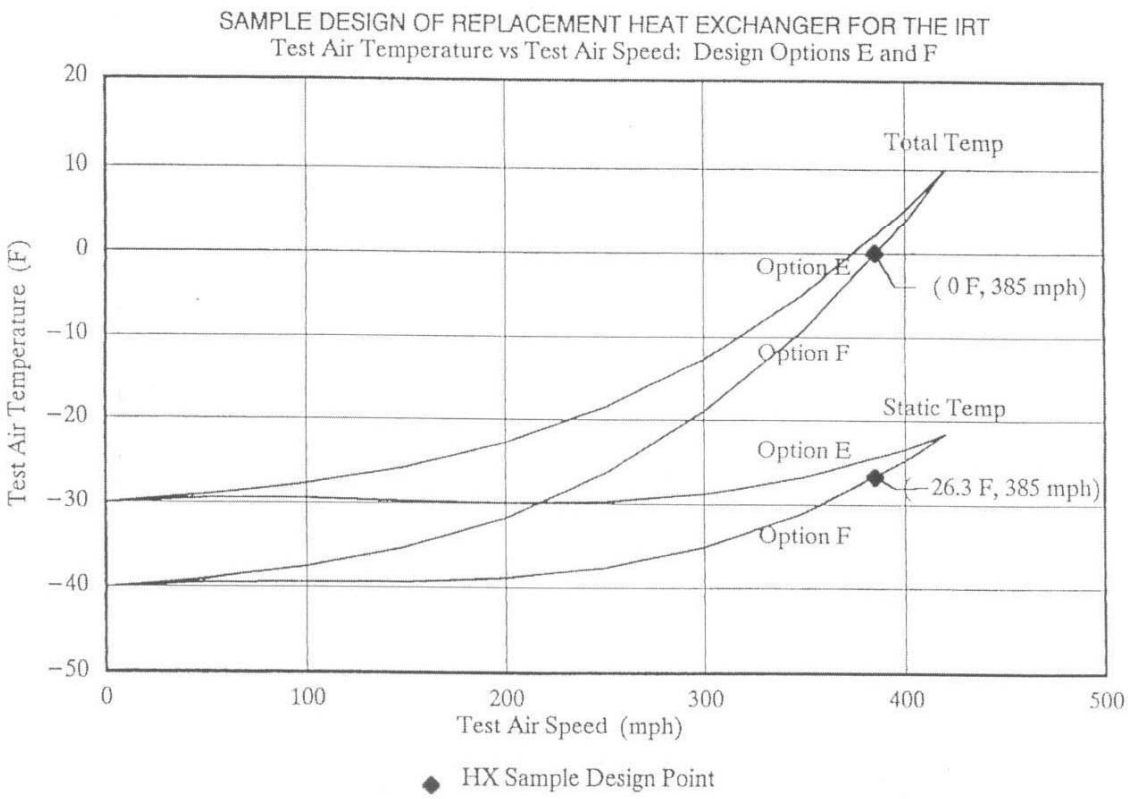

4. The system was originally designed for R12 refrigerant, but with the adoption of the Montreal protocol, the refrigerant was no longer available for use. The change to R134a significantly impacted overall performance.

5. The original liquid pumps were sized for 1000 GPM, but at some point the pumps have been replaced with models capable of 400 GPM.

6. Over the years, 6 of the 14 compressors have been removed from operation and the remaining 8 are not operating at the designed capacity.

C. Plant Issues

The heat exchanger was replaced in 1999/2000. Since the replacement of the HX, the IRT refrigeration plant has not been able to achieve the required low temperature thermal performance. The minimum operating temperature is approximately -28 degrees C and the desired minimum temperature is –40 degrees C. The primary limits on the thermal performance of the system are as follows:

1. R134a has significantly lower overall capacity and lower pressures at the operating temperature of the IRT.

2. The new HX requires a wider temperature difference between the refrigerant and the air. This exacerbates the low-pressure limitations of R134a.

3. The orifices in the new HX are significantly restrictive and may have a propensity for flashing. The flow of refrigerant liquid from the current pump may be too low and lead to a superheated condition in the refrigerant returning to the plant instead of the design basis recirculation rate,

4. The pumps appear to enter cavitation at low load conditions. This contributes to reduced liquid flow and superheat.

5. Under some operation conditions, the two-phase flow in the HX may separate and stratify. This reduces HX performance and surface temperature uniformity.
6. The piping and HX volume appear to have exceeded the volume of the flash cooler. This is believed to be a large part of the cavitation problem.

7. The compressors are currently being operated at a minimum pressure approximately equivalent to –40C saturation. The operators indicate that dangerous surging occurs at lower pressures and amp draws.

8. Can not shut down current refrigeration system. The existing system has it's primary operational charge residing in the low pressure side of the system. As the ambient temperature of the system increases, the refrigerant pressure

increases toward the pressure limits of the flash cooler and other components. This situation creates the requirement for a constant standby mode to actively control the pressure on the low side of the system within safe limits. An abrupt (or prolonged) loss of power or operational capacity could result in a catastrophic release of refrigerant through the pressure relief system.

9. Current plant has refrigeration leaks that require 10,000 lbs. every 2 years.

Compounding the performance issues is the general control methodology for the plant. The level of automation and control is such that operation requires the full attention of multiple operators to achieve desired results. Also, the performance is completely dependant on the actions of these human controllers.

D. Ice Erosion Issue

After the heat exchanger replacement, the IRT also suffered from development of ice erosion on the test model. Ice particles have been releasing at higher airspeed and lower temperatures (when there are heat loads on the heat exchanger). The ice particles are getting airborne in the air stream and impacting the leading edge of the test models and eroding the ice.

E. Goals of Study

The final study will provide NASA Glenn Research Center (GRC) with 3 options for alternative refrigeration systems. A rough estimated construction and O&M cost for each option. Costs will be provided along with a discussion of the pros and cons of each option.

Proposed locations of new structures and approximate size of the structures will be discussed.

2. Discussion

A. Data

NASA GRC provided the data included in appendix C. The appendix contains data provided with the statement of work as well as additional test data obtained on December 13, 2006. Both sets are summarized in the following table.

Overall Performance

Both sets of test data were reviewed from a general performance point of view and the results are summarized in the following table.

	Wind Speed					Entering Air			Leaving Air								Flash Cooler			TDair-Tflash	HX R134a Temp					
Desc	Knots	MPH	Power	CFM	Spray	Temp (C)	RH	Temp (F)	Temp (C)	RH	Temp (F)	dT (Air)	TR	Fan TR	TR-FanTR	Suction P	T (Calc?)	P	Pump dP	C	8IN	8OUT	8Out-In	8IN-Flash T	TDair-8In	Notes
Design	260.4	300	N/A	1301137		-11.7	45	10.9	-18.6	72.6	-1.5	6.9	1680.2	N/A		N/A	N/A	N/A	N/A		N/A	N/A				
Aug. 17, 2006 Data																										
50 Knots	51	58.7	0.05	254831	None	-23.1	49	-9.5	-28.5	55.8	-19.4	5.5	272.4	14.2	258.2	7.7	-40.1	7.5	23.9	17.0	-36.7	-32.9	3.8	3.4	8.2	
	51	58.7	0.06	254831	Start	-23.0	50	-9.4	-28.6	56.1	-19.4	5.6	277.0	17.1	259.9	7.5	-40.1	7.3	23.8	17.1	-37.3	-33	4.3	2.8	8.7	
	50	57.5	0.06	249834	End	-19.5	79	-3.1	-26.9	68.7	-16.5	7.4	384.9	17.1	367.8	7.7	-39.7	7.4	25.3	20.2	-36.9	-33.9	3	2.8	10.0	
	49	56.4	0.05	244838	Off	-19.4	80	-2.9	-26.9	68.8	-16.3	7.5	378.9	14.2	364.6	7.6	-39.9	7.5	25.4	20.5	-36.6	-33.7	2.9	3.3	9.8	
100 Knots	102	117	0.24	509662	None	-22.9	73	-9.2	-26.9	69.1	-16.5	4.0	417.1	68.3	348.8	7.5	-39.7	7.5	25.3	16.8	-35.1	-34	1.1	4.6	8.2	
	103	119	0.24	514658	Start	-23.0	73	-9.4	-27.0	69.1	-16.5	4.0	414.5	68.3	346.2	8	-39.3	7.5	25.5	16.3	-35.4	-34	1.4	3.9	8.4	
	99	114	0.23	494672	End	-20.8	80	-5.4	-25.5	73.4	-14.0	4.8	487.8	65.5	422.4	7.8	-39	7.6	27.2	18.3	-34.4	-33.2	1.2	4.6	8.9	
	99	114	0.24	494672	Off	-20.7	80	-5.3	-25.5	73.2	-13.8	4.8	484.2	68.3	415.9	7.8	-39.2	7.7	26.7	18.5	-34.2	-33.2	1	5	8.7	
150 Knots	155	178	0.72	774486	None	-22.2	76	-7.9	-25.7	72.9	-14.2	3.5	551.5	204.9	346.6	8.1	-39	8	26.8	16.8	-33.4	-32.7	0.7	5.6	7.7	
	155	178	0.72	774486	Start	-22.2	75	-8.0	-25.7	72.8	-14.3	3.5	546.8	204.9	341.9	8	-39	7.8	27.4	16.8	-34	-32.5	1.5	5	8.3	
	150	173	0.72	749503	End	-20.4	80	-4.7	-24.3	76.1	-11.8	3.9	606.6	204.9	401.7	8.1	-37.3	8.1	28.1	16.9	-32.6	-32	0.6	4.7	8.3	
	151	174	0.72	754499	Off	-20.3	80	-4.6	-24.3	76.0	-11.7	4.0	620.6	204.9	415.7	8	-38.7	7.9	29.1	18.4	-32.6	-31.8	0.8	6.1	8.3	
200 Knots	201	231	1.44	1004334	None	-20.3	79	-4.5	-23.7	75.9	-10.7	3.5	719.5	409.8	309.6	8.2	-38.2	8.2	29.1	18.0	-32	-31.4	0.6	6.2	8.3	
	200	230	1.45	999337	Start	-20.3	78	-4.6	-23.8	75.7	-10.8	3.4	702.5	412.7	289.9	8.1	-38.3	7.7	29.6	18.0	-31.7	-31.5	0.2	6.6	7.9	
	200	230	1.54	999337	End	-18.6	82	-1.4	-22.3	78.9	-8.2	3.8	786.1	438.3	347.8	8.5	-37.6	8.4	31.2	19.1	-32	-30.9	1.1	5.6	9.7	
	201	231	1.54	1004334	Off	-18.5	82	-1.4	-22.3	78.7	-8.2	3.8	793.8	438.3	355.5	8.7	-37.5	8.5	31.3	19.0	-32.1	-30.8	1.3	5.4	9.8	
250 Knots	253	291	2.84	1264161	None	-16.9	81	1.6	-20.6	79.6	-5.1	3.7	990.4	808.3	182.2	8.8	-36.5	8.8	34	19.6	-31.4	-29.4	2	5.1	10.8	
	251	289	2.76	1254168	Start	-16.8	81	1.7	-20.6	79.5	-5.0	3.8	984.2	785.5	198.7	8.9	-36.3	8.9	33.9	19.5	-32	-29.8	2.2	4.3	11.4	
	250	288	2.85	1249171	End	-15.3	84	4.5	-19.4	82.1	-2.8	4.1	1075.7	811.1	264.6	9.2	-36	9.1	35.2	20.7	-31.4	-28.9	2.5	4.6	12.1	
	251	289	2.85	1254168	Off	-15.3	84	4.5	-19.3	82.1	-2.7	4.0	1074.0	811.1	262.9	9.1	-36	9.1	35.5	20.7	-31.3	-29	2.3	4.7	12.0	
300 Knots	297	342	4.24	1484015	None	-13.0	84	8.6	-17.3	83.5	0.9	4.3	1373.8	1206.7	167.1	9.8	-34.9	9.8	37.6	21.9	-29.6	-27.3	2.3	5.3	12.3	
	296	341	4.25	1479019	Start	-12.9	84	8.8	-17.2	83.5	1.0	4.3	1389.6	1209.5	180.1	9.7	-35	9.8	37.7	22.1	-29.6	-27.6	2	5.4	12.4	
	292	336	4.15	1459032	End	-11.3	88	11.7	-15.7	86.6	3.7	4.5	1446.9	1181.1	265.8	10.5	-33.1	10.5	37.4	21.8	-28.1	-26.2	1.9	5	12.4	
	293	337	4.16	1464029	Off	-11.2	88	11.8	-15.7	86.6	3.8	4.4	1438.0	1183.9	254.1	10.5	-33.1	10.6	37.5	21.9	-28	-26.4	1.6	5.1	12.4	
						from RH Sensor			from RH Sensor		Notes:															
														Average	307.0											
Dec. 13, 2006 Data																										
100 knots	100	115	0.16	499668	None	-23.8	54	-10.8	-28.4	61.9	-19.1	4.6	448.7	45.5	403.2	7.8	-39	7.9	31.6	15.2	-36.4	-34.5	1.9	2.6	8.0	Min. Temp
100 knots	100	115	0.16	499668	None	-9.1	86	15.6	-10.1	93.0	13.8	1.0	96.3	45.5	50.8	9.8	-13.6	25.4	17.9	4.5	-13.5	-11.6	1.9	0.1	3.4	-10 C
150 knots	149	171	0.55	744506	None	-26.0	61	-14.8	-29.3	68.4	-20.7	3.3	472.9	156.5	316.4	7.4	-40.4	7.2	31	14.4	-36.1	-35	1.1	4.3	6.8	Min. Temp
150 knots	150	173	0.55	749503	None	-9.2	90	15.5	-10.6	93.1	13.0	1.4	228.5	156.5	72.0	9.8	-15.3	23.7	22.2	6.1	-14.8	-11.7	3.1	0.5	4.2	-10 C
217 knots	217	250	1.36	1084281	None	-24.0	72	-11.1	-26.8	74.7	-16.3	2.9	615.1	387.1	228.1	7.9	-38.3	8	33.4	14.3	-34.4	-33	1.4	3.9	7.6	Min. Temp
213 knots	213	245	1.55	1064294	None	-20.8	78	-5.5	-24.2	81.1	-11.6	3.4	731.8	441.1	290.7	8.1	-38.3	8.4	37.7	17.5	-34.4	-32	2.4	3.9	10.2	Min. Temp Before spray
219 knots	219	252	1.55	1094274	None	-7.8	84	18.0	-9.8	94.0	14.3	2.0	435.8	441.1	-5.3	9.8	-16.7	22.4	27.6	8.9	-15.5	-12	3.5	1.2	5.7	-10 C

Life Cycle Inputs based on current system

The tunnel is used 1000 hours a year at 50%.

10,000 pounds of new refrigerant is purchased every 2 years.

Pump Performance

The refrigerant pump performance measurements were also reviewed. Of particular interest were evidence of cavitation within the pump and evidence of flashing within the heat exchanger orifices.

The following is a plot of measured pump pressure rise from the original set of tunnel performance curves and from a set of comparable performance points made on Dec. 10, 2006. If one looks at the data one can see a substantial change in the measured pump pressure rise as a function of refrigerant temperature. From the original data the pump pressure rise correlates very well with measured flash tank temperature (or with flash tank pressure) as shown in the figure below. The second set of data does not correlate well particularly for a controlled tunnel set-point.

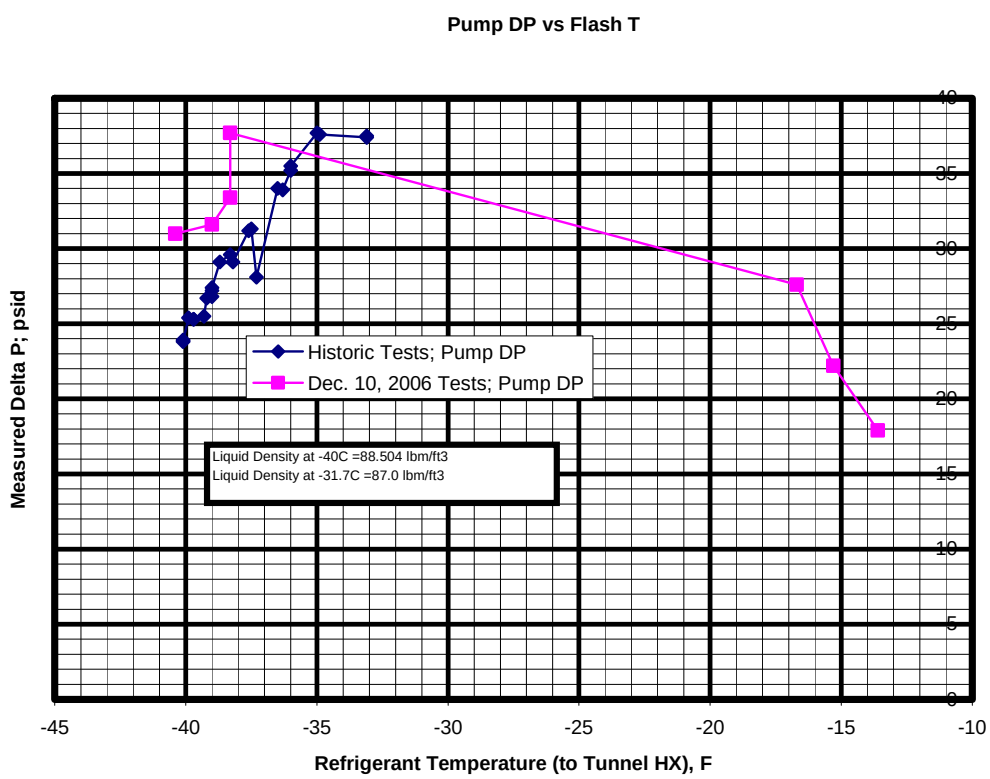

As noted above in the text box on the graph, the change in fluid properties, particularly fluid density, is small. The system flow losses are generally static head, turbulent flow, and orifice losses so they are not very sensitive to relatively small changes in viscosity and the linear relationship to fluid density has small variation because fluid density change is small.

One can also use the pump pressure as the abscissa and plot flash tank temperature, flash tank pressure, and circuit heat load as functions of pump pressure rise. This is given below and again one can also see that they go together.

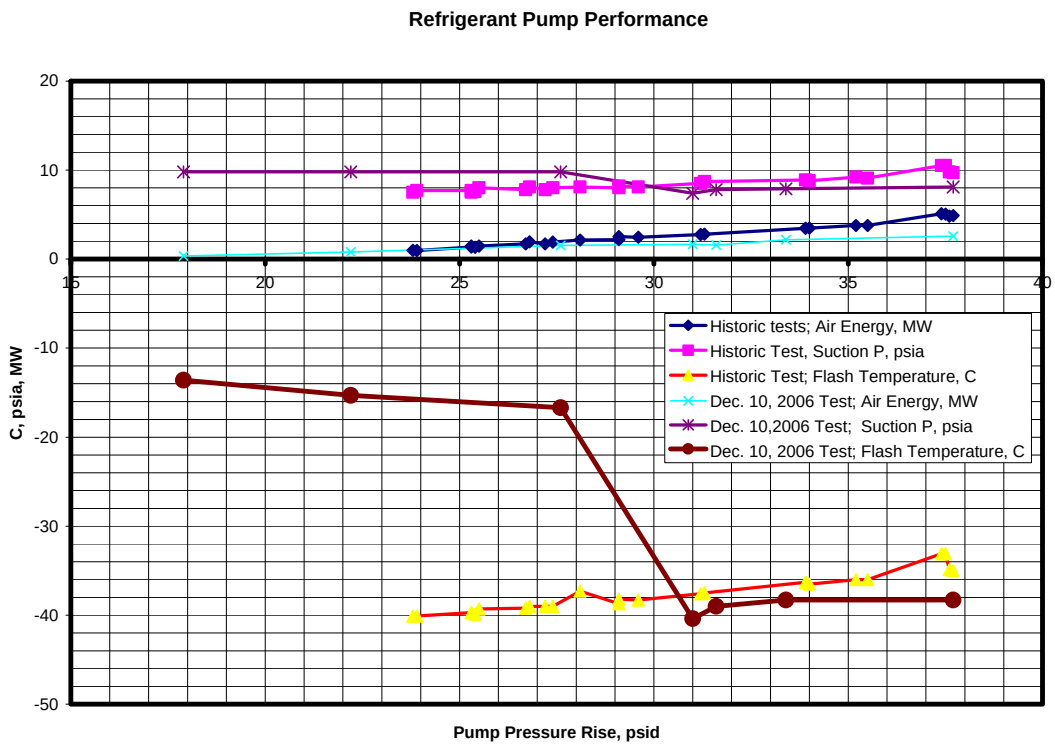

Now since the fluid state entering the pump should not have materially changed, the fluid state in the downstream circuit (the system resistance line) should not have materially changed over the temperature range. Rather the measured pump rise should have been relatively constant and the refrigerant flow should have been fairly well known. Correspondingly, the system resistance line should also have stayed the same.

Despite these expectations, there is a substantial change in pump rise and system resistance line. The following is an overview of the general problem. At a later time more detailed analysis can be performed although there still may be significant uncertainty. The reason for the current consideration was an original objective of reviewing existing heat exchanger performance and investigating the suitability of the heat exchanger with future modifications including adaptation to a secondary, single phase coolant.

The current system performance expectations come from several sources. The SOW included a table that stated that the expected pump pressure rise was 37.6 psid at a flow of 545gpm (no fluid temperature was tabulated and implied two pump operation). The Frigid Coil Heat Exchanger Performance Data Sheet from the archives noted a design basis of 407.2 gpm at -18F with no pump pressure rise noted. A recently reviewed packet of information includes a graph (Sperra, 05/01/2001) having a system match point of 45.3 psid rise at about 310 gpm from each of two, parallel pumps. Whatever, the current basis the pump rise should have remained constant.

Now the pump rise changed so what happened and what does it mean?

All other things being equal a centrifugal pump will produce the same “feet of head” independent of fluid density at a given operating point. The flow rate being pumped is given by the intersection of the system resistance line and the pump performance curve. The pressure rise is the “constant head” times the density of the fluid pumped. The measured increase in pump pressure rise has the same effect as having increasing density fluid. What seems to be happening is that the inventory of the flash tank is insufficient to satisfy the system liquid volume needs, perhaps even at maximum heat rejection conditions. Thus, the pump inlet flow decreases to a system match point by partially flashing of refrigerant at the pump inlet or internals.

The partial inlet vapor flow has the same effect on measured pump rise as reducing the “nominal” liquid density of the fluid through the pump. The mass flow through the pump should tend to be lower than expected somewhat in proportion to implied density variation inferred from the change in pressure rise. Thus, the flow could be too low at least by a factor of 24/38 or 0.63 at the lowest pressure rise as compared to the highest pressure rise. Since it is not known if the flow at the highest pressure rise compares to the expected head at the design basis match point, the actual flow rate is difficult to infer from the available information.

There is a pump design performance curve. While the information has not been fully processed; one can note that the system resistance line is shown relative to pump curves on a Figure dated 5/1/01. It shows an intersection point at about 45psia (head) at 305 gpm for one pump. At 400gpm from one pump only, the design basis of the heat exchanger, the system resistance is about 75psid

It should be noted that the point of 37.5 psid rise and 545/2 gpm is on the system resistance line. It is unknown if the expectations were determined based of test measurements or if it was based on piping analysis.

If flow expectation was based on piping analysis, it is reasonable to think about the system resistance line (or pressure loss). The flow passages downstream of the orifices (heat exchanger tube and return header/piping) were designed for low density fluid and low pressure loss. This is confirmed from the operating data in that the measured “HXRT” is not much different than the measured “FCP”.

Thus, the dominant losses in the system resistance line will be between the pump through the orifices. Between the pump and the orifices, the fluid should be single phase and the flow resistance up to the orifices should be fairly predictable and exhibit expected behavior as a function of assumed flowrate. The orifice pressure loss prediction, however, can be complex.

Using the data of Idel'chik for thick loss orifices, one would expect a loss coefficient of about 1.6. for smallest orifice in the Frigid Coil Drawing. Given the heat exchanger's design basis refrigerant flow, 407gpm, the orifice dynamic loss is about 4.4psid. This value is small relative to variation in pump pressure rise and relative to the measured difference between HXSP and HXRT.

What may have happened is that the system resistance line balanced with the pump pressure rise by having a critical flow state in the orifice. Critical flow of a two-phase fluid behaves somewhat like choked "dry" compressible flow. Basically, the inlet pressure to the orifice has to adjust appropriately to pass the effective flow produced by the pump. Given the magnitude of the change in measured pump pressure rise, the flow distribution orifices are quite likely to have been restricted by flashing (as compared to liquid pressure loss).

Criteria from Tong were used to estimate critical flow. His correlation (from Zaloudek) is a little suspect as to its generality to arbitrary fluids. Nevertheless, it is easy to implement and a calculation using HXSP and HXRT as driving pressure difference, showed that the orifice was near Type 1 critical flow. A later methodology published by Henry and Fauske should be more definitive and is known to be generalized for a variety of fluids. The latter requires some complexity to implement in a spreadsheet so it was not, but could be done at a later time.

It is complex to estimate liquid volume between the orifices and flash cooler. First vapor mass fraction varies as function of heat load. Although, the vapor dominates the flow cross-section, the internal volumes are quite large so the fractional liquid volume can still be significant. Second, because of slip between liquid phase and vapor phase in the piping and heat exchanger tubes, the liquid inventory is not equal to thermodynamic liquid fraction. Slip refers to the situation where the liquid velocity and the gas velocity are not equal. Slip calculation are geometric sensitive and subject to a presumption of two phase flow regime. For example, at nominal design heat load the fluid in at least part of the heat exchanger is well within the wavy flow regime. In the wavy flow, the vapor and liquid phases fully separate and slip may be high. This level of calculations were not attempted within this study for future systems, but could be of interest in estimating liquid volume within the "vapor" domain for the existing system to compute liquid level of the flash cooler.

In summary, it seems likely that pump was flowing with pump inlet flashing and that the distribution orifices were in a critical flow state at all operating points. The conclusion is

refrigerant flow is thus unknown, but could be much less than the design basis for the heat exchanger.

Further work in the detailed design phase could help refine the calculation. From a system point-of-view, the fundamental problem is that there is insufficient liquid volume to satisfy the liquid requirement in the down stream piping. As a result the liquid level is reduced until the pump flash to a sufficient extent to balance of the system. As the heat load increases, the need for liquid decreases within the heat exchanger and the return piping because of an increasing vapor fraction. Thus, the measured pressure rise increases. Because the uncertainty in the orifice losses the balance point is unknown. The impact of the annomally in pump performance is not very critical since the largest apparent reduction in pump flow occurs at lowest heat load.

Changing the orifice size will not materially alter the behavior as long as there is a liquid volume deficit. For any operating point where there is no liquid deficit, then increasing the orifice can: lower system flow resistance, increase system flow at the pump/resistance intersection, and decrease the propensity of the orifices to be in a critical flow state.

In the detail design, the next step, given the available information, would be to complete a liquid volume analysis and a pipe loss analysis with emphasis on losses to and through the orifices.

Orifices

As noted in the pump section above, flashing within the flow balancing orifices was simply evaluated from both a theoretical basis and by trying to infer from the test data. The simple theoretical model suggested that the existing orifice are marginal but may not flash. The test data were not conclusive, but flashing may be indicated by the balancing of the system resistance line with pump pressure rise as measured pump pressure rise varied with refrigerant temperature. More rigorous calculation can be done in more detailed design activity.

The issue of flashing basically is not, itself, critical to heat exchanger thermal performance as long as certain criteria are met. This requirement is that the pump has sufficient pressure rise to deliver the desired refrigerant to the tunnel heat exchanger even if flashing at the orifice occurs. The current pump does not seem to be delivering the desired flow rate but a new pump could. Now the cost of increasing orifice has been estimated (by others) to be quite large relative to the cost of pump pressure rise. Furthermore, the behavior of R507a will not be too different from R134a. Thus, for costing purposes it was assumed that a higher performance pump would be obtained for options 1 & 2 and the orifices would not be changed. For Option 3 the orifices would have to be eliminated and the fluid routes through the heat exchanger would also have to be modified.

The other two criteria is that if flashing does occur it should be uniform or refrigerant distribution within the heat exchanger could become imbalanced. This situation would

manifest itself with reduced overall thermal performance and temperature variation in the air exit plain. All measurements indicate good temperature distribution so flow uniformity is implied. Basically the orifices are performing their primary function of maintaining refrigerant flow uniformity.

The last of the three criteria is that flashing does not cause erosion of the orifice. If that occurred one would also see signs of flow imbalance. Again all data suggest that flow uniformity is being preserved.

In conclusion, it seemed that economic choice was to budget a higher refrigerant pump rating and not add in the expense modify the heat exchanger flow orifices. Note that the "new" pump would still have to function within the available net positive suction head.

During design the issue of flashing should be evaluated over the entire refrigerant temperature range of interest. The estimated orifice loss is relatively small compared to the total pump rise. If uncertainty exists within the detailed assessment, a characteristic orifice could be calibrated empirically. We would recommend a calibration of the orifices.

Heat Exchangers

The tunnel heat exchanger thermal performance was also evaluated for a variety of possibilities. The approach was to perform conventional performance estimates using "generalized" data correlations. The performance estimates will differ with manufacturer's performance estimates which will use proprietary data and methodology (particularly for the two-phase regime). Characteristic boiling heat transfer coefficients from ASHRAE were used to estimate "refrigerant" heat transfer coefficients. As anticipated the R507 and R134 are not very different. The heat coefficient is so high relative to the air side thermal conductance that boiling has very little effect on estimated thermal performance. For this reason the current heat exchanger was assumed to be able to maintain the current level of thermal performance for either Option 1 or 2. From the previous section it was also judged that the existing orifices could be used.

A boiling performance assumption requires that the heat exchanger stays within the desired two phase flow regime. In looking at this issue, it was found that a significant portion of the heat exchanger could be in an undesirable wavy flow regime. The current heat exchanger functions with the wavy flow. Nevertheless, this effect will not be materially different for either Option 1 or 2. Thus, the conclusion stands that there should not be a material change in heat exchanger performance between Option 1 and Option 2.

Some heat exchanger performance improvement may occur (as measured by tunnel air temperature) by a refrigeration system delivering lower temperature fluid and by a pump delivering higher and constant flow. This would be the same for both Option 1 and 2.

Option 3 uses a secondary fluid for tunnel air cooling which uses single phase, sensible heat transfer rather than boiling. As a single phase fluid, the heat exchanger design is less

constrained. The existing heat exchanger was evaluated to determine the coolant flow and the heat exchanger matrix. Assuming Therminol D-12 was the coolant it was found that that coolant flow in the range of 9000 to 13000 gpm should give equivalent performance to boiling refrigerant, but the heat exchanger would have to be significantly modified. The orifices would have to removed and the coolant route through the tubes would have to be changed to a 4-pass cross-counter flow arrangement. This would likely mean that the heat exchanger would have to be removed, sent to a shop for modifications, and then reinstalled.

The cost of the tubular heat exchanger modifications may be so high or the downtime may be so long that it may be preferred to simple replace the existing heat exchanger. If so, the calculations show that it should be possible to obtain a comparable heat exchanger with comparable tunnel side performance characteristics.

Because of the differences between single phase heat transfer and boiling heat transfer, other heat exchanger options may be attractive. A plate-fin type matrix was evaluated. The results of the calculation were quite promising in that there is a potential for a reduction in tunnel side pressure loss and/or decrease in tunnel air temperature for a given refrigeration temperature set-point. Coolant cooled plate-fin heat exchangers have been successfully applied to other tunnels, but there is no prior icing tunnel experience.

Because the coolant conveys heat by sensible temperature rise rather that latent heat of vaporization, the coolant flow is quite large. This implies a substantial increase in circulating pump size and line size increase to the tunnel heat exchanger.

Fluids

Option 1 utilizes R-134a which is the refrigerant in current use. There will be minimal changes in performance characteristics of heat exchange components. Option 2 utilizes R507a which is not much different that R134a. In fact, R507A is a two fluid mixture. It is a 50-50% mixture of R125and R143a. The R507a has the effect of a significantly increased pressure at low IRT operating temperatures and increased density. Thus, the existing heat exchanger core and return line losses will be materially lower. There may, however, be a greater propensity for wavy flow and liquid/vapor slip.

Option 3 uses a Therminol D-12 as a transport fluid. This is a commonly used medium for comparable applications. It is a well established fluid, but has a significant initial cost. Other fluids are available. Another attractive fluid is d-limolene which has very low viscosity and freeze point. It is derived from citrus oil.

B. Design Assumptions

The following assumptions have been made as to the performance and applicability of any given design.

1. Refrigerant choices should be limited to those regularly available on the market and expected to be available in the future.
2. Due to construction of the wind tunnel, toxic refrigerants such as ammonia should not be used in the tunnel HX.
3. Construction downtime is a major consideration for the selection of a final design.
4. Equipment reliability and operational uptime are critical design criteria. Each design will be sized such that operation without any given compressor will still achieve full capacity.
5. The control system should be able to operate the equipment without maintenance supervision. The level of automation should allow testing parameters to be entered from the wind tunnel control room station and the necessary control be achieved automatically.

General Design Discussion

At the time of the HX replacement, the tunnel heat load was estimated at approximately 1600 tons of refrigeration (TR). The test data collected shows a peek calculated HX capacity of 1446.9 TR at the achievable temperature of -28 C (see current performance spreadsheet), which agrees with the previous estimate. Therefore, the 1600 TR number was used as the basis. A generic 25% equipment design safety factor and a 5% estimate for the losses incurred in piping thermal gain and pressure losses (not accounted for in the simple models of the overall system, but will show up as load on the compressor). This yields 2100 TR.

From the test data, we experienced a fluid to air temperature differential of 22 C at maximum load. The desired performance profile shows near peak airspeed at -35C therefore -57C is the lowest full load evaporating temperature needed. Some HX performance gain can be assumed, so -55F (–48.3C) was chosen as the full load basis. The lower power requirements at lower temperatures allow some degradation in both refrigeration capacity and HX performance. A targeted minimum operating temperature (at the heat exchanger outlet) of -45C should give solid repeatable performance at -40C so -65F was chosen as the minimum temperature basis. For equipment selection, the capacity has chosen as 1600 tons at -65F (-54.9C) suction temp and 2100 tons at -55F suction temp, this should give adequate general design margin. Each option will have additional specific margins built in to ensure overall performance.

All designs presented are conceptual in nature, but are based on estimated details of one or more candidate designs. These candidates have a significant granular quality to many

of the parameters, sizes, etc and therefore the actual size, count, and distribution of loads will be determined in the actual design of a system.

C. Compressor Plant Option 1 – Centrifugal Plant

General Discussion

The first option selected would use a compounded system of several centrifugal compressors much like the current plant. Compression in this type of system is accomplished by the centrifugal force created by a series of fan-like rotors. This type of system is commonly used in very large plants with relatively constant loads. These compressors tend to be quite expensive, but have very high reliability and low maintenance.

Selection Criteria

R134a was chosen as the refrigerant to avoid additional downtime to flush the piping and to allow the evaluation of continued operation during changeover with a phased installation. This selection would allow the least overall changes to the system components, piping, structure and theory of operation.

Given the large differential pressure and low inlet pressure of the system, a 2-stage system was selected. The compressors chosen for the concept are able to handle the required capacity with 2 low stage compressors and 1 high stage compressor. Because of the redundancy requirements this means a system having 3 low stage compressors and 2 high stage compressors. To alleviate the need to double the condensing capacity, 2 smaller condensers where chosen and a bypass valve is to be installed between the units to allow all the flow from one compressor to route to both condensers. Also, the attached process diagrams show valves that could be installed around the low stage units if operation at ambient conditions was desired.

Changes

The flash cooler, liquid pumps, and refrigerant storage tank should be replaced in the option to allow for better liquid flow characteristics, more overall refrigerant volume, and vessel pressure rating inline with current ASME standards. This configuration would fit within the existing building, but after engineering analysis it is questionable if operation could be continued during changeover. The issue with continued operation would be the change out of the flash tank, due to the different size and configuration of the new system.

Heat Exchanger Modifications

Option 1 will use the existing heat exchanger and orifices. A new pump has been budgeted and the pump will be selected to compensate for any increase in actual orifice

pressure loss relative to expected loss that is due to flashing. This eliminates the cost and downtime for changing orifices. The heat exchanger performance is expected to be equal to current performance. There may be some small improvement in performance with pump replacement.

Equipment & Mechanical Piping

For this option, all existing plant equipment is removed from the existing building and the building modified to accommodate new equipment. The new arrangement is shown on drawings A1 (Floor Plan) and A2 (Basement Plan). The building modifications include: adding support beams on top of existing compressor footings to support the 3 low pressure and 2 high pressure compressors, floor penetrations for piping and mounting pads for new equipment.

The new flash cooler and suction header would be located in basement (same location as current cooler) to permit the 36 inch low pressure compressor suction lines to pass through the existing floor opening. The 24 inch piping between the low pressure and high pressure compressors is on the main floor as shown on the drawings. The condensers downstream of the high pressure compressors, the receiver, the economizer and associated piping are located along the building wall. The new liquid pump, heat exchanger 6 inch supply line connection and the heat exchanger 36 inch return line connection to the flash cooler are located in the basement. Piping between the basement and the wind tunnel heat exchanger does not require modifications.

The refrigerant R-134a volume is estimated to be 14,000 liquid gallons as derived in work package 6 of the cost estimate.

Cooling water piping, to and from the two condensers, ties into the existing cooling water system in this building.

The sizes for the new equipment and the piping system diameters were determined in ASE's Calculation Package 4 and are also shown on the arrangement drawings. The detail cost sheets show the equipment and piping sizes together with bill of material list for piping components. The cost sheet bill of materials includes pipe runs, elbows, flanges, valves, supports and other relevant pipe components. As can be observed in the cost sheets, piping stresses for design pressures are computed for selected wall thicknesses, cold piping is insulated, all piping is painted and refrigerant volumes are computed as part of the cost roll up. Piping and vessel materials are assumed to be SA 106 Gr. B and SA 516 Gr. 70 respectively.

Design of the piping system would be per ASME B31.5 and design of the pressure vessels would be per ASME.

Environmental & Safety Related to Refrigerants

Refrigerant safety is evaluated using two factors: toxicity and flammability. A rating to describe these two factors is applied by the American Society of Heating, Refrigerating and Air-Conditioning Engineers (ASHRAE). The rating for R-134a and R-507 is A1 which is the highest safety rating possible. Class A indicates no evidence of toxicity below a concentration of 400 ppm. Class 1 indicates the refrigerant will not propagate a flame under normal conditions in open air.

The environmental impact of a refrigerant is evaluated using two factors: the Ozone Depletion Potential (ODP) and the Global Warming Potential (GWP). The ODP describes the potential for a single molecule of the refrigerant to destroy the ozone layer. All refrigerants are compared to R11 which has been assigned an ODP value of 1.0. The lower the ODP value, the better the refrigerant is for the ozone layer and the environment. The ODP for R-134a is 0; the ODP for R-507 is also 0. The GWP is a measurement (usually over a 100-year period) of how much effect a refrigerant will have on global warming in relation to carbon dioxide which is assigned a value of 1. The lower the GWP, the better the refrigerant is for the environment. The GWP for R-134a is 1,300; the GWP for R-507 is 3,300.

In summary, both refrigerants have the same safety rating so there is no difference between them. Both R-134a and R-507 have the same ODP of 0. The GWP for R-134a is about 3 times lower than that of R-507. Therefore, refrigerant R-134a can be considered slightly better than R-507 in terms of lower environmental impacts.

Controls

Each of the compressors will have its own supervisory control system. These systems will need to be integrated with the existing IRT control system to provide the overall plant control. The design and commissioning teams will provide the IRT staff a detailed control description, and will work with them to debug and tune the system.

The primary control point for the system would be suction pressure and the setpoint would automatically be derived from air temperature control requirements. The approximate load requirements or testing profile for the run would need to be entered into the system, so that maximum capacity requirements could be calculated by the control system. The system would automatically stage the required number of compressors online and begin control. Because of the vary large inertial mass of the rotors, centrifugal compressor control systems avoid cycling compressors on or off unless absolutely necessary.

The control of this system would be achieved in three automatic stages. The first stage would be the adjustment of inlet vanes within the compressor body. This reduces the

efficiency of the compressors and limits the capacity. In conjunction with inlet vanes adjustment, some hot gas would be allowed to bypass the condensers and flow directly into the flash cooler/suction line. This would regulate the overall suction mass flow and reduce the capacity at the HX. If needed capacity control were still not achieved, the third stage would be the regulation of the cooling water. This would cause the condensing pressure to increase, thereby simultaneously decreasing the efficiency of the compressors and increasing the efficiency of the hot gas bypass.

Shut Down

The envisioned system will have a pump-down and purge system capable of transferring all of the refrigerant charge into the high pressure receiver (and associated components) and eliminating any entrapped air from the system. Once in the pump-down state, the system could be valved off and powered down for extended periods.

Energy Efficiency

Centrifugal compression is the most efficient method of refrigeration available, but only at the design point of the compressors. Given the wide operating range of this system, this option will consume equal or greater energy then the other circuits in normal operation.

Reliability

Centrifugal compressors are a very simple design, and consist of 1 major moving component (the rotor). This translates to low maintenance and high reliability. Actual reliability depends on the application, design, and duty but it is not out of the ordinary to expect 25-40 years of operation based on NASA's use of 1000 hours per year. ASHRAE rates the service life of a centrifugal compressor at 23 years at continuous operation.

Operation and Maintenance

The primary maintenance items for a centrifugal plant are bearing lubrication and inspection, filter maintenance, cooling water system maintenance, refrigeration recharging, and leak detection and repair. This is quite dependant on the final installation and operation, but it would be reasonable to assume 1 man day per compressor per month for preventative maintenance and 1 man week per compressor per year for repairs.

Impact to Research

It is anticipated that this option would require 14 months of downtime for the changeover. A rough construction schedule is included in appendix E.

There is no good indication that this option will improve the ice erosion issue.

Design details

- R134a refrigerant
- Single refrigeration circuit
- Liquid recirculation system
- Example Compressor Configuration – 3 low stage compressors and 2 high stage compressors (capacity can be achieved with 4 operating)
- Example Compressor: York M55

Changes

- Addition of a high-pressure liquid receiver for storage of additional refrigerant
- Changes to the electrical connections
- Changes to the cooling tower water piping
- Updated control system
- New liquid pumps
- Replacement of the water cooled condensers
- Replacement of the flash cooler
- Replacement of the refrigerant storage tank
- Replacement of the liquid economizers

Pros/Cons

Benefits

- Highest expected compressor lifetime
- Lowest system change footprint
- No changes needed to HX or tunnel
- Highest energy efficiency at design load
- Similar flow pattern through HX
- Inexpensive refrigerant
- Low oil infiltration into HX circuit

Limitations

- R134a refrigerant will still require a deep vacuum, limiting performance and allowing the possibility of air infiltration into the system
- Capacity control is complex and limited
- Single circuit implies that any issue impacting the integrity of the system can cause downtime.
- Centrifugal system are sensitive to variations in load, such as idle times between runs
- Less common system type, requiring special skills, parts, etc.
- Downtime is expected to be approximately 14 months

- Existing leaks will require repair and some of the old piping will remain.

Additional Notes

1. There is a possibility that the existing condensers could be reused depending on their condition and the final design. This would need to be determined at the time of design.
2. R507 could also be used for this system, but would require additional time and effort during the conversion process. This refrigerant would operate in less of a vacuum, but is not commonly applied in centrifugal systems.

Building Requirements

For option 1 the existing building will be reused, see attached floor plans sheets A1 & A2. It is anticipated that minimal changes will be required with the exception of structural concerns. Modifications made to the building will have to follow the current building code used by the Federal Government, International Building Code 2003 edition.

The proposed compressors are long than the existing compressors and would span over the existing floor opening in the middle of the building. The new flash cooler needs to be located in the basement. An area of the existing floor open has been left available to access the basement.

Demolition

Existing refrigeration equipment and piping with in the building must be removed.

Site

Site modifications are not required with option 1.

Structural

See Option 1 building plans for building size and layout. See general structural design criteria in Section H.

- For Option 1, the new equipment will be located within the existing refrigeration building, which will be modified as required.
- Existing equipment and piping will need to be removed, as will concrete pads and steel supports associated with these items. New floor openings may need to be provided, and some existing openings may need to be filled in.
- The new compressors will bridge over the large first floor opening over the basement – concrete or steel infill framing will be required in this area.

- Pads and steel supports for new equipment and piping will need to be provided.
- Some reinforcing of the existing first floor framing could be required.
- The existing crane's capacity and clear lift height will need to be reviewed to make sure it can accommodate the maintenance requirements of the new larger equipment.
- Modifications to the exterior wall and foundation may be required for new pipe entries and exits.

HVAC & Plumbing

Changes to the existing HVAC system are not anticipated with option 1 with the exception of the following.

Ventilation required with the type and quantity of refrigerants will need to be reviewed when the final design is completed. It is possible that refrigerant leak detectors will be required and additional ventilation.

The cooling water piping will require modifications with in the building to service the new compressors.

Major plumbing changes are not anticipated at this time.

Electrical

Background Information

Substation "E" consists of two (2) 10/12.5 MVA (million volt-amperes), 34.5-2.4 kV (kilovolt) transformers that are used to power Building #9, (IRT Refrigeration). These transformers have secondary ratings of 3,000-amps at 2.4-kV. Five (5) 2.4-kV 1200-amp bus configurations are used to distribute power to the various machines fed from this substation. Two of the bus are fed from one transformer and three bus from the other. A 3,000-amp tie breaker can be closed to power both bus arrangements in the event that one transformer is out-of-service; however, the maximum load capable of being operated under this condition is limited to 3,000-amps.

Building #9 (Existing IRT Refrigeration Building) contains approximately 18,000-horsepower of connected electrical equipment. In addition to IRT equipment, the 2.4-kV bus distribution also powers approximately 2662-horsepower of equipment located in the Natural Gas Compressor Building (Bldg #18-2), Fire Pump Building (Bldg #18-1), and Central Air Conditioning System.

Electrical load distribution for the five (5) 2.4 kV bus systems are roughly subdivided as follows:

bus WE1 feeds Central Air Conditioning System (1037-horsepower), Natural Gas Compressor Building (1500-horsepower)
bus WE2 feeds 3,000-horsepower of compressors, 900-horsepower of miscellaneous loads, and 125-horsepower of Fire Pumps
bus WE3 feeds 3,000-horsepower of compressors and 400-horsepower of miscellaneous loads
bus WE4 feeds 4,500-horsepower of compressors and 800-horsepower of miscellaneous loads
bus WE5 feeds 1,500-horsepower of compressors (with a spare 1,500-horsepower feeder that is no longer in use) and 1,235-horsepower of miscellaneous loads

Electrical Requirements

Option 1 consists of five (5) centrifugal compressors arranged in two (2) 6,000-horsepower high-pressure and three (3) 3,000-horsepower low-pressure unit configurations with installation in the existing Building #9. The largest anticipated total electrical load is approximately 15,000-horsepower; however, the present distribution gear can not handle a 6,000 horsepower compressor and will require new power distribution.

Initial costs and O&M costs

The IRT Construction Cost Estimate provides a cost summary and cost estimate details, including breakdowns and supporting pipe wall thickness calculations for the individual Work Packages.

Cost estimate details developed by ASE include vendor quotes, cost for similar equipment used on other projects and information extracted from the Richardson Cost Estimating Manual.

The three work packages containing the piping estimates have detail spread sheets that are bill of material based. Thus pipe run lengths, number of elbows, valves etc are priced individually. Each piping components has material, labor and installation costs; in most cases, Richardson has one entry for material and installed labor. The pipe diameters on the detail spread sheets are determined in ASE Calculation Package 4. The mass flow rates used in these calculations are consistent with those on the Process Drawings. The piping and equipment arrangement used in the pricing is consistent with that shown on the building/equipment arrangement drawings.

The O&M costs are a yearly estimate. The energy estimates were generated using generic HP/Ton efficiency ratings for the various systems and warm/cool cooling water temperatures. An energy cost of $0.05 per kWh was used as the basis. Refrigerant expenses were included separately for comparison to the existing system, but other fluids (oil, D-12, etc) are included in the maintenance budget. A cost factor of $3/Lb for R134A and $9/Lb for R507 was used. The maintenance calculations are based on percentage of purchase estimates adjusted to the duty and usage.

Operation Costs per year

Energy

	Refrigeration Capacity	Minimum HP/Ton	Maximum HP/Ton	Required Comp HP	Pump HP	Total HP	KW	KW Load	Runtime	Total Energy	Energy Cost @ 0.05/KW
Option 1	1100	3.7	5.3	4950	50	5000	3730	4289.5	1000	4289500	$ 214,475.00

Refrigerant

	lb/yr		
Option 1	5000	3	15000

Maintenance

	Purchase Cost	Percentage	Total Cost
Option 1	6000000	0.035	210000

Option 1		
Energy	$	214,475.00
Refrigerant	$	15,000.00
Maintenance	$	210,000.00
Total	**$**	**439,475.00**

Summary of IRT Mechanical Construction Cost Estimate

WP	Work Package Description, Option 1		Material/Equip (Installed)	Engineering	Total	%
1	Building Modifications & Remove Existing Equipment		$402,500	$36,000	$438,500	4.2%
2	Compressor System		$6,586,100	$155,400	$6,741,500	64.9%
3	Flash Cooler		$147,000	$31,575	$178,575	1.7%
4	Receiver		$36,000	$24,000	$60,000	0.6%
5	Condensers and Economizer		$171,000	$18,000	$189,000	1.8%
6	Piping Systems		$1,608,043	$198,000	$1,806,043	17.4%
7	Pumps		$17,150	$3,600	$20,750	0.2%
8	Controls		$350,000	$63,000	$413,000	4.0%
9	Electrical Power Supply		$500,000	$43,200	$543,200	5.2%
	Subtotal, Option 1		$9,817,793	$572,775	$10,390,568	100.0%
	Contractor Overhead:	10%	$981,779	$57,278	$1,039,057	
	Subtotal:		$10,799,572	$630,053	$11,429,625	
	Contractor Profit:	15%	$1,619,936	$94,508	$1,714,444	
	Option 1 Total (March 2007 $):		$12,419,508	$724,560	$13,144,068	

ASE Construction Estimate
Work Package 1 -- Buildings, Site and Foundations

			Equipment or Material (Installed)					Engineering				
Ref.	Description	Tag Number	Cost Per Unit	Unit Measure	Quantity	Total Cost	Basis for Estimate	Hours	Per Unit	Total	Basis for Estimate	Total Costs
	Compressor Building Mods		$ 250,000	Lump Sum	1	$ 250,000	See Sheet WP1 - Details	400	$ 75	$ 30,000		$ 280,000
									$ 75	$ -		$ -
	Remove Existing Equipment		$ 75	labor hour	1500	$ 112,500			$ 75	$ -		$ 112,500
	Equipment Rental (crane)		$ 2,000	per day	20	$ 40,000			$ 75	$ -		$ 40,000
									$ 75	$ -		$ -
									$ 75	$ -		$ -
									$ 75	$ -		$ -
									$ 75	$ -		$ -
									$ 75	$ -		$ -
									$ 75	$ -		$ -
									$ 75	$ -		$ -
						$ -			$ 75	$ -		$ -
						$ -			$ 75	$ -		$ -
						$ -			$ 75	$ -		$ -
						$ -			$ 75	$ -		$ -
	Documentation							40	$ 75	$ 3,000	See Note 2	$ 3,000
	Support for Integrated Tests							20	$ 75	$ 1,500	See Note 3	$ 1,500
	Support for Operational Validation Tests							20	$ 75	$ 1,500	See Note 4	$ 1,500
	TOTAL					**$ 402,500**		**480**		**$ 36,000**		**$ 438,500**

NOTES:

1 Hourly Engineering Labor Cost = $75
2 Documentation 10% of Engineering Design Cost
3 Support for Integrated Tests 5% of Engineering Design Cost
4 Support for Operational Validation Tests 5% of Engineering Design Cost
5 Estimates based on Richardson estimating manual include lighting, electrical outlets, HVAC, finishes, etc. for typical industrial buildings
6 ASE estimates based on Design, Specification and / or Supply of similar equipment (Sheet WP1 -- Details)

ASE Construction Estimate
Work Package 2 -- Compressor System

			Equipment or Material (Installed)					Engineering				
Ref.	Description	Tag Number	Cost Per Unit	Unit Measure	Quantity	Total Cost	Basis for Estimate	Hours	Per Unit	Total	Basis for Estimate	Total Costs
	Engineering					$ -			$ 75	$ -		$ -
	System Performance Analysis					$ -		1200	$ 75	$ 90,000	ASE Estimate	$ 90,000
	Equipment Design / Specification					$ -		260	$ 75	$ 19,500	ASE Estimate	$ 19,500
	Compressors					$ -			$ 75	$ -		$ -
	Compressor Skid, York M55, 32 ft x 8 ft		$ 1,300,000	Ea	5	$ 6,500,000	York ROM	250	$ 75	$ 18,750		$ 6,518,750
	Mounting Beams, W30X210, 80 ft lg		$ 8,400	Ea	4	$ 33,600	$0.50/lb	260	$ 75	$ 19,500		$ 53,100
									$ 75	$ -		$ -
									$ 75	$ -		$ -
									$ 75	$ -		$ -
									$ 75	$ -		$ -
	Installation:					$ -			$ 75	$ -		$ -
	Compressor Skid		$ 75	labor hour	500	$ 37,500	ASE Estimate		$ 75	$ -		$ 37,500
	Mounting Beams		$ 75	labor hour	200	$ 15,000	ASE Estimate		$ 75	$ -		$ 15,000
						$ -			$ 75	$ -		$ -
	Documentation							51	$ 75	$ 3,825	See Note 2	$ 3,825
	Support for Integrated Tests							26	$ 75	$ 1,913	See Note 3	$ 1,913
	Support for Operational Validation Tests							26	$ 75	$ 1,913	See Note 4	$ 1,913
	TOTAL					**$ 6,586,100**		**612**		**$ 155,400**		**$ 6,632,000**

NOTES:

1	Hourly Engineering Labor Cost =	$75	
2	Documentation	10%	of Engineering Design Cost
3	Support for Integrated Tests	5%	of Engineering Design Cost
4	Support for Operational Validation Tests	5%	of Engineering Design Cost
5	ASE estimates based on Design, Specification and / or Supply of similar equipment		

ASE Construction Estimate
Work Package 3 -- Flash Cooler

			Equipment or Material (Installed)					Engineering				
Ref.	Description	Tag Number	Cost Per Unit	Unit Measure	Quantity	Total Cost	Basis for Estimate	Hours	Per Unit	Total	Basis for Estimate	Total Costs
	Flash Cooler, 8 ft dia, 30 ft lg		$ 85,000	Lump Sum	1	$ 85,000	Richardson Sect 100-341	200	$ 75	$ 15,000	ASE Estimate for Specification	$ 100,000
	Internal Baffles		$ 20,000	Lump Sum	1	$ 20,000	ASE Allowance		$ 75			
									$ 75			
	Suction Hader, 4.5 ft dia, 25 ft lg		$ 30,000	Lump Sum	1	$ 30,000	Richardson Sect 100-341	150	$ 75	$ 11,250	ASE Estimate for Specification	$ 41,250
									$ 75			
	Insulation - see piping section								$ 75			
						$ -			$ 75	$ -		$ -
	Installation, Flash Cooler		$ 75	labor hour	80	$ 6,000	ASE Estimate		$ 75			
									$ 75			
	Installation, Suction Header		$ 75	labor hour	80	$ 6,000	ASE Estimate		$ 75			
						$ -			$ 75	$ -		$ -
	Documentation							35	$ 75	$ 2,625	See Note 2	$ 2,625
	Support for Integrated Tests							18	$ 75	$ 1,350	See Note 3	$ 1,350
	Support for Operational Validation Tests							18	$ 75	$ 1,350	See Note 4	$ 1,350
	TOTAL					**$ 147,000**		**421**		**$ 31,575**		**$ 146,575**

NOTES:

1	Hourly Engineering Labor Cost =	$75	
2	Documentation	10%	of Engineering Design Cost
3	Support for Integrated Tests	5%	of Engineering Design Cost
4	Support for Operational Validation Tests	5%	of Engineering Design Cost
5	ASE estimates based on Design, Specification and / or Supply of similar equipment		

ASE Construction Estimate
Work Package 4 -- Receiver

			Equipment or Material (Installed)					Engineering				
Ref.	Description	Tag Number	Cost Per Unit	Unit Measure	Quantity	Total Cost	Basis for Estimate	Hours	Per Unit	Total	Basis for Estimate	Total Costs
	Receiever, 6 ft dia, 30 ft lg		$ 30,000	Lump Sum	1	$ 30,000	Richardson Sect 100-341	200	$ 75	$ 15,000	ASE Estimate	$ 45,000
									$ 75			
	Installation		$ 75	labor hour	80	$ 6,000	ASE Estimate		$ 75			
						$ -			$ 75	$ -		$ -
						$ -			$ 75	$ -		$ -
	Documentation							60	$ 75	$ 4,500	See Note 2	$ 4,500
	Support for Integrated Tests							30	$ 75	$ 2,250	See Note 3	$ 2,250
	Support for Operational Validation Tests							30	$ 75	$ 2,250	See Note 4	$ 2,250
	TOTAL					**$ 36,000**		**320**		**$ 24,000**		**$ 54,000**

NOTES:

1	Hourly Engineering Labor Cost =	$75	
2	Documentation	10%	of Engineering Design Cost
3	Support for Integrated Tests	5%	of Engineering Design Cost
4	Support for Operational Validation Tests	5%	of Engineering Design Cost
5	ASE estimates based on Design, Specification and / or Supply of similar equipment		

ASE Construction Estimate
Work Package 5 -- Condensors and Economizers

			Equipment or Material (Installed)					Engineering				
Ref.	Description	Tag Number	Cost Per Unit	Unit Measure	Quantity	Total Cost	Basis for Estimate	Hours	Per Unit	Total	Basis for Estimate	Total Costs
	Condensors, 4 ft dia, 7 ft lg		$ 45,000	Lump Sum	2	$ 90,000	Sim to TEI quote Q4434JRO	100	$ 75	$ 7,500	ASE Estimate	$ 97,500
						$ -			$ 75	$ -		$ -
	Economizer, 4 ft dia, 7 ft lg		$ 45,000		1	$ 45,000		100	$ 75	$ 7,500	ASE Estimate	$ 52,500
						$ -			$ 75	$ -		$ -
									$ 75			
	Insualtion of Economizers - see piping section								$ 75			
						$ -			$ 75	$ -		$ -
	Installation					$ -			$ 75	$ -		$ -
						$ -			$ 75	$ -		$ -
	Condensors		$ 75	labor hour	400	$ 30,000	ASE Estimate		$ 75	$ -		$ 30,000
						$ -			$ 75	$ -		$ -
	Economizer		$ 75	labor hour	80	$ 6,000	ASE Estimate		$ 75	$ -		$ 6,000
						$ -			$ 75	$ -		$ -
						$ -			$ 75	$ -		$ -
	Documentation							20	$ 75	$ 1,500	See Note 2	$ 1,500
	Support for Integrated Tests							10	$ 75	$ 750	See Note 3	$ 750
	Support for Operational Validation Tests							10	$ 75	$ 750	See Note 4	$ 750
	TOTAL					**$ 171,000**		**240**		**$ 18,000**		**$ 189,000**

NOTES:

1	Hourly Engineering Labor Cost =	$75	
2	Documentation	10%	of Engineering Design Cost
3	Support for Integrated Tests	5%	of Engineering Design Cost
4	Support for Operational Validation Tests	5%	of Engineering Design Cost
5	ASE estimates based on Design, Specification and / or Supply of similar equipment		

ASE Construction Estimate
Work Package 6 -- Piping Systems

			Equipment or Material (Installed)					Engineering				
Ref.	Description	Tag Number	Cost Per Unit	Unit Measure	Quantity	Total Cost	Basis for Estimate	Hours	Per Unit	Total	Basis for Estimate	Total Costs
	Piping and Valves		$ 1,032,019	Lump Sum	1	$ 1,032,019	See Sheet WP6 - Details	750	$ 75	$ 56,250	ASE Estimate	$ 1,088,269
	Insulation		$ 204,755	Lump Sum	1	$ 204,755	See Sheet WP6 - Details	150	$ 75	$ 11,250		$ 216,005
	R 134a Refrigerant		$ 371,269	Lump Sum	1	$ 371,269	See Sheet WP6 - Details	100	$ 75	$ 7,500		$ 378,769
	Overall Piping System Analysis					$ -		1200	$ 75	$ 90,000	ASE Estimate	$ 90,000
						$ -			$ 75	$ -		$ -
						$ -			$ 75	$ -		$ -
						$ -			$ 75	$ -		$ -
						$ -			$ 75	$ -		$ -
						$ -			$ 75	$ -		$ -
						$ -			$ 75	$ -		$ -
						$ -			$ 75	$ -		$ -
	Documentation							220	$ 75	$ 16,500	See Note 2	$ 16,500
	Support for Integrated Tests							110	$ 75	$ 8,250	See Note 3	$ 8,250
	Support for Operational Validation Tests							110	$ 75	$ 8,250	See Note 4	$ 8,250
	TOTAL					**$ 1,608,043**		**2640**		**$ 198,000**		**$ 1,806,043**

NOTES:

1 Hourly Engineering Labor Cost = $75
2 Documentation 10% of Engineering Design Cost
3 Support for Integrated Tests 5% of Engineering Design Cost
4 Support for Operational Validation Tests 5% of Engineering Design Cost
5 ASE estimates based on Design, Specification and / or Supply of similar equipment
6 Sheet WP6 -- Details: ASE valve cost estimate model based on actual costs of similar valves from previous recent projects
7 Sheet WP6 -- Details: Costs from Richardson cost estimating manual (2002) increased by factor of 1.4 to account for: a) steel price increases, and b) limited quantities and other relevant factors per Richardson manual
8 Sheet WP6 -- Details: Piping lengths are approximate, average lengths for each identified system based on ASE layout Drawing

ASE Construction Estimate
Work Package 6 -- Piping Systems
Cost Estimate Details

Piping Run/Component	Pressure, psig	OD, inch	Wall thickness, inch (min)	Stress, psi	Ext P Cap, psi (approx)	Length, mm	Volume ft3	Length, ft	Wt, lbs	Materials / Equipment Cost Basis: Per ft	Per lb	Per Item	Installation Cost: Labor hrs	Labor Cost/hr	Quantity	Total Cost	Estimate Basis / Comments
Piping and Valves																**$ 1,032,019**	
Return line from HX to Flash Cooler (in bldg only)																	
Pipe	150	46	0.3750	9,200	16.30	10,000	379	33	6038	$ 357.00					1	$ 11,713	Richardson
Field beveling & butt welds		46										$ 6,276.00			3	$ 18,828	Richardson
BF valve		46										$ 36,056	16	$ 50.00	1	$ 36,856	ASE valve cost estimate model
Elbow		46	0.375					6	1012			$ 12,628.00			2	$ 25,256	Richardson.
125 lb flanges		46							730		$ 4.20				3	$ 9,198	Richardson
125 lb flange bolts & gaskets		46										$ 1,260.00			2	$ 2,520	Richardson
Painting pipes, based on area in ft2		46				10,000		33	395	ft2		$ 5.00			1	$ 1,976	Means Estimate
Supports									2050		$ 5.00				1	$ 10,252	Weight = 20% of Supported Weight
Subtotal																$ 116,599	
Flash Cooler to 1st Stage Compressors																	
Pipe	150	36	0.375	7200	20.83	24000		79	11341	$ 239.00					3	$ 56,457	Richardson
Fileld beveling & butt welds									0			$ 2,560.00			9	$ 23,040	Richardson
BF valve		36										$ 36,056	16	$ 50.00	4	$ 147,426	Vanessa quote
Elbow		36	0.375					4	576			$ 4,610.00			12	$ 55,320	Richardson
125 lb flanges		36							450		$ 4.20				20	$ 37,800	Richardson
125 lb flange bolts & gaskets		36										$ 980.00			12	$ 11,760	Richardson
Tee		36	0.375						521			$ 7,160.00		$ 50.00	2	$ 14,320	Richardson
Painting pipes, based on area in ft2		36				24,000		79	742	ft2		$ 5.00			3	$ 11,132	Means Estimate
Support Tower									10196		$ 5.00				1	$ 50,978	Weight = 20% of Supported Weight
Subtotal																$ 408,232	
1st Stage Comp to Economizer																	
Pipe	350	12	0.2500	8,400	41.67	32,000		105	3360	$ 66.00					1	$ 6,929	Richardson. Assume 3/8 wall
Field beveling & butt welds		12										$ 494.00			3	$ 1,482	Richardson
BF valve		12										$ 7,411	4	$ 50.00	2	$ 15,222	ASE valve cost estimate model
CV valve		12										$ 5,694	4	$ 50.00	1	$ 5,894	ASE valve cost estimate model
Elbow		12	0.375					6	125			$ 504.00			4	$ 2,016	Richardson.
Nipple		12										$ 478.00			1	$ 478	Richardson.
150 lb flanges		12							80		$ 4.20				8	$ 2,688	Richardson
150 lb flange bolts & gaskets		12										$ 228.00			8	$ 1,824	Richardson
Painting pipes, based on area in ft2		12				32,000		105	330	ft2		$ 5.00			1	$ 1,649	Means Estimate
Support Tower									900		$ 5.00				1	$ 4,500	Weight = 20% of Supported Weight
Subtotal																$ 42,682	
1st Stage Comp to 2nd Stage Comp																	
Pipe	350	24	0.3750	11,200	31.25	24,000		79	7561	$ 158.00					1	$ 12,441	Richardson
Field beveling & butt welds		24										$ 941.00			3	$ 2,823	Richardson
BF valve		24										$ 12,000	12	$ 50.00	5	$ 63,000	Vanessa quote
Elbow		24	0.375					6	460			$ 1,653.00			2	$ 3,306	Richardson.
Exp Joint		24										$ 3,250.00	2	$ 50.00	5	$ 16,750	Richardson
150 lb flanges		24							260		$ 4.20				16	$ 17,472	Richardson
150 lb flange bolts & gaskets		24										$ 624.00			20	$ 12,480	Richardson
Tee		24							433			$ 2,919.00		$ 50.00	4	$ 11,676	Richardson
Painting pipes, based on area in ft2		24				24,000		79	495	ft2		$ 5.00			1	$ 2,474	Means Estimate
Support Tower									3059		$ 5.00				1	$ 15,293	Weight = 20% of Supported Weight
Subtotal																$ 157,714	
2nd Stage Comp to Condensors																	
Pipe	350	12	0.2500	8,400	41.67	18,000		59	1890	$ 66.00					2	$ 7,795	Richardson
Field beveling & butt welds		12										$ 494.00			5	$ 2,470	Richardson
BF valve		12										$ 7,411	4	$ 50.00	2	$ 15,222	ASE valve cost estimate model
CV valve		12										$ 5,694	4	$ 50.00	2	$ 11,788	ASE valve cost estimate model
Elbow		12	0.375						125			$ 504.00			4	$ 2,016	Richardson
Tee		12	0.375						143			$ 693.00			2	$ 1,386	Richardson

ASE Construction Estimate
Work Package 6 -- Piping Systems
Cost Estimate Details

										Materials / Equipment Cost Basis			Installation Cost				
Piping Run/Component	Pressure, psig	OD, inch	Wall thickness, inch (min)	Stress, psi	Ext P Cap, psi (approx)	Length, mm	Volume ft3	Length, ft	Wt, lbs	Per ft	Per lb	Per Item	Labor hrs	Labor Cost/hr	Quantity	Total Cost	Estimate Basis / Comments
Nipple		12										$ 478.00			2	$ 956	Richardson
150 lb flanges		12							80		$ 4.20				8	$ 2,688	Richardson
150 lb flange bolts & gaskets		12										$ 228.00			8	$ 1,824	Richardson
Painting pipes, based on area in ft2		12				18,000		59	186	ft2		$ 5.00			2	$ 1,855	Means Estimate
Support Tower									984		$ 5.00				1	$ 4,920	Weight = 20% of Supported Weight
Subtotal																$ 52,921	
Condensors to Receivers																	
Pipe	350	6	0.1875	5600	62.50	24000	31	79	945	$ 31.00					2	$ 4,882	Richardson
Fileld beveling & butt welds		6							0			$ 308.00			4	$ 1,232	Richardson
BF valve		6										$ 1,800.00	4	$ 50.00	2	$ 4,000	Richardson
Check Valve		6										$ 1,680.00	4	$ 50.00	2	$ 3,760	Richardson
Tee		6							30			$ 293.00			2	$ 586	Richardson
Elbow		6	0.375					2	25			$ 202.00			6	$ 1,212	Richardson
150 lb flanges		6							24		$ 4.20				6	$ 605	Richardson
150 lb flange bolts & gaskets		6										$ 119.00			6	$ 714	Richardson
Painting pipes, based on area in ft2		6				24,000		79	124	ft2		$ 5.00			2	$ 1,237	Means Estimate
Support Tower									449		$ 5.00				1	$ 2,244	Weight = 20% of Supported Weight
Subtotal																$ 20,472	
Receiver to Economizer																	
Pipe	350	8	0.1875	7466.7	46.88	46000	53	151	2415	$ 41.00					1	$ 6,188	Richardson
Fileld beveling & butt welds		8							0			$ 349.00			4	$ 1,396	Richardson
Valve		8										$ 8,000.00	6	$ 50.00	1	$ 8,300	ASE valve cost estimate model
Elbow		8	0.375					8	50			$ 270.00			3	$ 810	Richardson
150 flanges		8							39		$ 4.20				8	$ 1,310	Richardson
150 lb flange bolts & gaskets		8										$ 100.00			5	$ 500	Richardson
Painting pipes, based on area in ft2		8				46,000		151	316	ft2		$ 5.00			1	$ 1,580	Means Estimate
Support Tower									575		$ 5.00				1	$ 2,877	Weight = 20% of Supported Weight
Subtotal																$ 22,962	
Liquid Feed Control Valve to Flash Cooler																	
Pipe	350	20	0.25	14000	25.00	9000		30	1575	$ 133.00					1	$ 3,927	Richardson
Fileld beveling & butt welds		20							0			$ 809.00			4	$ 3,236	Richardson
Exp Joint		20										$ 2,500.00	12	$ 50.00	1	$ 3,100	Richardson
Elbow		20	0.375					5	320			$ 1,292.00			4	$ 5,168	Richardson
150 lb flanges		20							180		$ 4.20				4	$ 3,024	Richardson
150 lb flange bolts & gaskets		20										$ 526.00			4	$ 2,104	Richardson
Painting pipes, based on area in ft2		20				9,000		30	155	ft2		$ 5.00			1	$ 773	Means Estimate
Support Tower									715		$ 5.00				1	$ 3,575	Weight = 20% of Supported Weight
Subtotal																$ 24,907	
Economizer to Liquid Feed Control Valve																	
Pipe	350	6	0.1875	5600	62.50	6000	4	20	236	$ 31.00					1	$ 610	Richardson
Fileld beveling & butt welds		6							0			$ 308.00			3	$ 924	Richardson
BF valve		6										$ 1,800.00	4	$ 50.00	1	$ 2,000	Richardson
Check Valve		6										$ 1,680.00	4	$ 50.00	2	$ 3,760	Richardson
Elbow		6	0.375					2	25			$ 202.00			4	$ 808	Richardson.
150 lb flanges		6							24		$ 4.20				4	$ 403	Richardson
150 lb flange bolts & gaskets		6										$ 119.00			6	$ 714	Richardson
Painting pipes, based on area in ft2		6				6,000		20	31	ft2		$ 5.00			1	$ 155	Means Estimate
Support Tower									86		$ 5.00				1	$ 432	Weight = 20% of Supported Weight
Subtotal																$ 9,806	
Hot Gas Control Valve to Flash Cooler																	
Pipe	150	12	0.2500	3,600	41.67	4,000		13	420	$ 66.00					1	$ 866	Richardson
Field beveling & butt welds		12										$ 494.00			2	$ 988	Richardson
BF valve		12										$ 7,411	4	$ 50.00	1	$ 7,611	ASE valve cost estimate model

ASE Construction Estimate
Work Package 6 -- Piping Systems
Cost Estimate Details

										Materials / Equipment Cost Basis			Installation Cost				
Piping Run/Component	Pressure, psig	OD, inch	Wall thickness, inch (min)	Stress, psi	Ext P Cap, psi (approx)	Length, mm	Volume ft3	Length, ft	Wt, lbs	Per ft	Per lb	Per Item	Labor hrs	Labor Cost/hr	Quantity	Total Cost	Estimate Basis / Comments
Elbow		12	0.375					6	125			$ 504.00			2	$ 1,008	Richardson.
150 lb flanges		12							80		$ 4.20				4	$ 1,344	Richardson
150 lb flange bolts & gaskets		12										$ 228.00			4	$ 912	Richardson
Painting pipes, based on area in ft2		12				4,000		13	41	ft2		$ 5.00			1	$ 206	Means Estimate
Support Tower									198		$ 5.00				1	$ 990	Weight = 20% of Supported Weight
Subtotal																$ 13,925	
2nd Stage Comp to Hot Gas Control Valve																	
Pipe	350	4	0.1875	3733	93.75	36000	10	118	945	$ 21.00					1	$ 2,480	Richardson.
Fileld beveling & butt welds		4							0			$ 225.00			4	$ 900	Richardson
Tee		4							30			$ 224.00			2	$ 448	Richardson
Elbow		4	0.375					2	25			$ 146.00			6	$ 876	Richardson.
Check Valve		4										$ 1,100.00	4	$ 50.00	2	$ 2,600	Richardson
150 lb flanges		4							15		$ 4.20				10	$ 630	Richardson
150 lb flange bolts & gaskets		4										$ 97.00			10	$ 970	Richardson
Painting pipes, based on area in ft2		4				36,000		118	124	ft2		$ 5.00			1	$ 618	Means Estimate
Support Tower									261		$ 5.00				1	$ 1,305	Weight = 20% of Supported Weight
Subtotal																$ 10,828	
Pump Down Compressor																	
Pipe	350	2	0.1875	1867	187.50	5000	0	16	66	$ 15.00					1	$ 246	Richardson
Fileld beveling & butt welds		2							0			$ 140.00			4	$ 560	Richardson
Tee		2							30			$ 140.00			1	$ 140	Richardson
Elbow		2	0.375					2	25			$ 90.00			6	$ 540	Richardson.
Nipple		2										$ 110.00			2	$ 220	Richardson
BF valve		2										$ 1,000	4	$ 50.00	2	$ 2,400	ASE valve cost estimate model
Check Valve		2										$ 560.00	4	$ 50.00	1	$ 760	Richardson
150 lb flanges		2							6		$ 4.20				8	$ 202	Richardson
150 lb flange bolts & gaskets		2										$ 50.00			8	$ 400	Richardson
Painting pipes, based on area in ft2		2				5,000		16	9	ft2		$ 5.00			1	$ 43	Means Estimate
Support Tower									59		$ 5.00				1	$ 294	Weight = 20% of Supported Weight
Subtotal																$ 5,804	
Flash Cooler to HX, includes liquid pump																	
Pipe	150	6	0.1875	2400	62.50	24000	15	79	945	$ 30.00					1	$ 2,362	Richardson.
Fileld beveling & butt welds		6							0			$ 308.00			4	$ 1,232	Richardson
BF valve		6										$ 1,800.00	4	$ 50.00	2	$ 4,000	Richardson
Elbow		6	0.375					2	25			$ 202.00			6	$ 1,212	Richardson.
150 lb flanges		6							24		$ 4.20				6	$ 605	Richardson
150 lb flange bolts & gaskets		6										$ 119.00			6	$ 714	Richardson
Painting pipes, based on area in ft2		6				24,000		79	124	ft2		$ 5.00			2	$ 1,237	Means Estimate
Support Tower									248		$ 5.00				1	$ 1,239	Weight = 20% of Supported Weight
Subtotal																$ 12,601	
Cooling Water to Condensors																	
Pipe	85	28	0.3750	3,173	26.79	32,000		105	11761	$ 185.00					1	$ 19,423	Richardson.
Field beveling & butt welds		28										$ 1,300.00			3	$ 3,900	Richardson
Valve		28										$ 19,000	12	$ 50.00	1	$ 19,600	Vanessa quote
Elbow		28	0.375					6	460			$ 3,011.00			4	$ 12,044	Richardson
Reducer		24										$ 2,508.00			2	$ 5,016	Richardson
Exp Joint		24										$ 3,000.00	2	$ 50.00	4	$ 12,400	Richardson
125 lb flanges		28							295		$ 4.20				12	$ 14,868	Richardson
125 lb flange bolts & gaskets		28										$ 740.00			14	$ 10,360	Richardson
Tee		28							433			$ 5,630.00		$ 50.00	2	$ 11,260	Richardson
Painting pipes, based on area in ft2		28				32,000		105	770	ft2		$ 5.00			1	$ 3,848	Means Estimate
Support Tower									3969		$ 5.00				1	$ 19,847	Weight = 20% of Supported Weight
Subtotal																$ 132,565	

ASE Construction Estimate
Work Package 6 -- Piping Systems
Cost Estimate Details

										Materials / Equipment Cost Basis			Installation Cost				
Piping Run/Component	**Pressure, psig**	**OD, inch**	**Wall thickness, inch (min)**	**Stress, psi**	**Ext P Cap, psi (approx)**	**Length, mm**	**Volume ft3**	**Length, ft**	**Wt, lbs**	**Per ft**	**Per lb**	**Per Item**	**Labor hrs**	**Labor Cost/hr**	**Quantity**	**Total Cost**	**Estimate Basis / Comments**
Pipe Insualation, Urethane w/ Vapor Barrier																**$ 204,755**	
and Jacket, 3 inches thick									**Area ft2**		**cost/ft2**						
Liquid Feed Control Valve to Flash Cooler		20	0.25	0	25.00	9000		30	155		$ 50.00				1	$ 7,730	Richardson
Flash Cooler to HX		6	0.1875	0	62.50	24000		79	124		$ 50.00				1	$ 6,184	Richardson
Flash Cooler to 1st Stage Compressors		36	0.375	0	20.83	24000		79	742		$ 50.00				3	$ 111,316	Richardson
Return line from HX to Flash Cooler (in bldg only)		46	0.3750	0	16.30	10,000		33	395		$ 50.00				1	$ 19,755	Richardson
Flash Cooler 8 ft dia 15 ft lg		96					1,508	30	754		$ 50.00				1	$ 37,699	Richardson
Suction Header, 4.5 ft dia, 25 ft lg		54						25	353		$ 50.00				1	$ 17,671	Richardson
Economizer		48					88	7	88		$ 50.00				1	$ 4,398	Richardson
Reciewver 6 ft dia 30 ft lg		72					848	30	565		$ 50.00				1	$ 28,274	Richardson
Refrigerant Volume, R134a																	
												Cost/ft3					
Piping/Components =							1,459	ft3	**10916**	**gallons**							20% reciever, 100% piping
(above items only)																	50% cooler and economizer
HX & piping to/from Flash Cooler =	462.3	10	155.6	100	1950.30	10	396.86	ft3	**2968**	**gallons**							
(estimate from NASA)	HX ft3	% liq	Cooler to Orif ft3	% liq	HX to Cooler ft	% liq											
Total Refrigerant =							1856	ft3	**13884**	**gallons**		$ 200.00				**$ 371,269**	

ASE Construction Estimate
Work Package 7 -- Pumps

			Equipment or Material (Installed)					Engineering				
Ref.	Description	Tag Number	Cost Per Unit	Unit Measure	Quantity	Total Cost	Basis for Estimate	Hours	Per Unit	Total	Basis for Estimate	Total Costs
						$ -			$ 75	$ -		$ -
	Material/Equipment:					$ -			$ 75	$ -		$ -
	Pump, 500 gpm, 30 hp, Main		$ 4,500	Lump Sum	2	$ 9,000	Richardson 100-280	40	$ 75	$ 3,000		$ 12,000
	Pumpdown Compressor		$ 2,300	Lump Sum	1	$ 2,300	Richardson 100-280	30	$ 75	$ 2,250		$ 4,550
									$ 75			
	Installation, Main Pump		$ 75	labor hour	50	$ 3,750	Richardson 100-280		$ 75			
	Installation, Pumpdown Comp		$ 75	labor hour	28	$ 2,100	Richardson 100-280		$ 75			
									$ 75			
	Documentation							4	$ 75	$ 300	See Note 2	$ 300
	Support for Integrated Tests							2	$ 75	$ 150	See Note 3	$ 150
	Support for Operational Validation Tests							2	$ 75	$ 150	See Note 4	$ 150
	TOTAL					**$ 17,150**		**78**		**$ 3,600**		**$ 17,150**

NOTES:

1	Hourly Engineering Labor Cost =	$75	
2	Documentation	10%	of Engineering Design Cost
3	Support for Integrated Tests	5%	of Engineering Design Cost
4	Support for Operational Validation Tests	5%	of Engineering Design Cost
5	ASE estimates based on Design, Specification and / or Supply of similar equipment		
6	Sheet WP7 -- Details: Costs from Richardson cost estimating manual (2002) increased by factor of 1.4 to account for: a) steel price increases, and b) limited quantities and other relevant factors per Richardson manual		

ASE Construction Estimate
Work Package 8 -- Controls

			Equipment or Material (Installed)					Engineering				
Ref.	Description	Tag Number	Cost Per Unit	Unit Measure	Quantity	Total Cost	Basis for Estimate	Hours	Per Unit	Total	Basis for Estimate	Total Costs
	Engineering					$ -		700	$ 75	$ 52,500	ASE Estimate	$ 52,500
									$ 75	$ -		$ 300,000
	Material / Equipment		$ 300,000		1	$ 300,000	ASE Est		$ 75	$ -		$ 300,000
									$ 75	$ -		$ -
	Supervisory PLC and Interface		$ 50,000		1	$ 50,000	ASE Est		$ 75	$ -		$ 50,000
									$ 75	$ -		$ -
	Installation - included in above					$ -			$ 75	$ -		$ -
									$ 75	$ -		$ -
									$ 75	$ -		$ -
									$ 75	$ -		$ -
						$ -			$ 75	$ -		$ -
	Documentation							70	$ 75	$ 5,250	See Note 2	$ 5,250
	Support for Integrated Tests							35	$ 75	$ 2,625	See Note 3	$ 2,625
	Support for Operational Validation Tests							35	$ 75	$ 2,625	See Note 4	$ 2,625
	TOTAL					**$ 350,000**		**840**		**$ 63,000**		**$ 713,000**

NOTES:

1	Hourly Engineering Labor Cost =	$75	
2	Documentation	10%	of Engineering Design Cost
3	Support for Integrated Tests	5%	of Engineering Design Cost
4	Support for Operational Validation Tests	5%	of Engineering Design Cost
5	ASE estimates based on Design, Specification and / or Supply of similar equipment		

ASE Construction Estimate
Work Package 9 -- Electrical Power Supply

			Equipment or Material (Installed)					Engineering				
Ref.	Description	Tag Number	Cost Per Unit	Unit Measure	Quantity	Total Cost	Basis for Estimate	Hours	Per Unit	Total	Basis for Estimate	Total Costs
								480	$ 75	$ 36,000		$ 36,000
	Compresor Power Wiring		$ 400,000		1	$ 400,000	ASE Est		$ 75	$ -		$ 400,000
						$ -			$ 75	$ -		$ -
	Valve Wiring		$ 100,000		1	$ 100,000	ASE Est		$ 75	$ -		$ 100,000
						$ -			$ 75	$ -		$ -
						$ -			$ 75	$ -		$ -
						$ -			$ 75	$ -		$ -
						$ -			$ 75	$ -		$ -
						$ -			$ 75	$ -		$ -
						$ -			$ 75	$ -		$ -
						$ -			$ 75	$ -		$ -
						$ -			$ 75	$ -		$ -
						$ -			$ 75	$ -		$ -
						$ -			$ 75	$ -		$ -
						$ -			$ 75	$ -		$ -
	Documentation							48	$ 75	$ 3,600	See Note 2	$ 3,600
	Support for Integrated Tests							24	$ 75	$ 1,800	See Note 3	$ 1,800
	Support for Operational Validation Tests							24	$ 75	$ 1,800	See Note 4	$ 1,800
	TOTAL					**$ 500,000**		**576**		**$ 43,200**		**$ 543,200**

NOTES:

1	Hourly Engineering Labor Cost =	$75	
2	Documentation	10%	of Engineering Design Cost
3	Support for Integrated Tests	5%	of Engineering Design Cost
4	Support for Operational Validation Tests	5%	of Engineering Design Cost
5	ASE estimates based on Design, Specification and / or Supply of similar equipment		

IRT Construction Schedule																
ASE - Bob Week																
4-Apr-07																
Option/Tasks						**MONTHS**										
	1	**2**	**3**	**4**	**5**	**6**	**7**	**8**	**9**	**10**	**11**	**12**	**13**	**14**	**15**	**16**
Option 1 (Exisitng Building)																
Remove Existing Equipment/Piping																
Modify Building (Mtg beams & penetrations)																
Order Major Equipment (Comp & Vessels)																
Install Major Equipment																
Shop Fab Piping																
Install Piping																
Checkout and Commissioning																
Downtime																
Notes:																
1. Design complete at start of construction																
2. Design duration approx 12 months																

R-134a

Temperature, F	Pressure, psig
-60	21.8 ("Hg Vac)
-55	20.3 ("Hg Vac)
-50	18.7 ("Hg Vac)
-45	16.9 ("Hg Vac)
-40	14.8 ("Hg Vac)
-35	12.5 ("Hg Vac)
-30	9.8 ("Hg Vac)
-25	6.9 ("Hg Vac)
-20	3.7 ("Hg Vac)
-15	0.1 ("Hg Vac)
-10	1.9
-5	4.1
0	6.5
5	9.1
10	11.9
15	15.0
20	18.4
25	22.1
30	26.1
35	30.4
40	35.0
45	40.1
50	45.4
55	51.2
60	57.4
65	64.0
70	71.1
75	78.7
80	86.7
85	95.2
90	104.3
95	113.9
100	124.2
105	135.0
110	146.4
115	158.4
120	171.2
125	184.6
130	198.7
135	213.6
140	229.2
145	245.7
150	262.9

Honeywell Genetron® 134a

Properties, Uses, Storage, and Handling

Honeywell

Honeywell Genetron® 134a
Properties, Uses, Storage, and Handling

Table of Contents

Introduction **3**

Applications **3**

Stationary Refrigeration and Air-Conditioning 3

Automotive Air-Conditioning 3

Aerosol and Foam-Blowing Applications 3

Physical Properties **3**

Specifications – Refrigeration Grade **4**

Performance Data (English Units & SI Units) **4**

Pressure vs. Temperature (English Units & SI Units) **4**

Lubricants **5**

Miscibility in Lubricants 5

Copper Plating 5

Stability with Metals 6

Chlorinated Materials and Refrigerants 6

Genetron 134a/CFC-12 6

Equipment **7**

Compatibility: Plastics and Elastomers 7

Materials Compatibility **7**

Polyethylene Terephthalate (PET) 7

Desiccants 7

Solubility of Water in Genetron 134a 7

Safety **8**

Toxicity 8

Inhalation 8

Skin and Eye Contact 8

Leaks 8

Flammability 8

Combustibility 8

Thermal Stability 8

Storage and Handling **9**

Maintenance **9**

Leak Detection **9**

Types of Detectors 9

Retrofitting **10**

Commercial Refrigeration 10

Automotive Air-Conditioning Systems 10

Commercial Air-Conditioning Systems 10

Home Appliances 10

Retrofit Lubricants 10

Retrofit Procedures 10

Environmental Considerations **11**

Reclamation 11

Waste 11

Packaging **11**

Technical Assistance **11**

Pressure-Enthalpy (Mollier Diagrams) (English Units & SI Units) **11-12**

Thermodynamic Tables (English Units & SI Units) **13-15**

Introduction

Genetron® 134a (1,1,1,2-tetrafluoroethane) is a non-ozone-depleting, environmentally safer refrigerant developed by Honeywell to replace CFCs and HCFCs in several air-conditioning and refrigeration applications. It possesses similar energy efficiency and capacity characteristics as CFC-12, has an intrinsically low toxicity, and is recognized as a superior long-term solution in many applications.

This document is meant to provide engineers, technicians, and mechanics with basic Genetron 134a properties, plus application and handling information to facilitate safe and efficient usage.

Applications

Stationary Refrigeration and Air-Conditioning

Genetron 134a can be used in refrigeration applications including supermarket cases, walk-in coolers, beverage dispensers, vending machines, water coolers and home refrigerators. Genetron 134a is also used in centrifugal chillers. Genetron 134a is suitable for both new equipment and for retrofitting existing CFC-12 commercial refrigeration systems. Generally, there will be few equipment design changes necessary to optimize the performance of Genetron 134a in these applications.

For further information on retrofitting, your Genetron refrigerants distributor or your Honeywell sales or technical representative can provide you with the most up-to-date retrofit literature. We also recommend consulting the original equipment manufacturer before performing any retrofit.

Automotive Air-Conditioning

Several automobile and truck manufacturers have selected Genetron 134a for the initial charge in their new vehicles. Additionally, retrofit kits for converting CFC-12 systems to Genetron 134a are widely available. Honeywell is also proud to offer Genetron 134aUV, a special formulation of Genetron 134a and a refrigerant-soluble dye that fluoresces when exposed to ultraviolet light. Genetron 134aUV was developed specifically for automotive mechanics who wanted a solution for making leak detection in cars and trucks easier, faster, and less expensive.

Aerosol and Foam-Blowing Applications

Genetron 134a is used as a propellant in many specialty aerosol products and may be used as a blowing agent for rigid-foam insulation. Additional information on the use of Genetron 134a in aerosol and foam applications is available through your Honeywell sales or technical representative.

Physical Properties

Chemical Name		1,1,1,2-tetrafluoroethane
Appearance		Clear, colorless gas with a faint ethereal odor
Molecular Formula		CH_2FCF_3
Molecular Weight		102.03
Boiling Point	@ 1 ATM	-14.9°F
	@ 14.3 kPa	-25.9°C
Freezing Point	@ 1 ATM	-141.9°F
	@ 101.3 kPa	-96.6°C
Critical Temperature*		213.91°F 101.06°C
Critical Pressure*		588.75 psia 4059.3 kPa
Critical Volume*		0.031 ft^3/lb 0.00195 kg/m^3
Critical Density*		31.957 (lb/ft^3) 511.9 (kg/m^3)
Vapor Density at Boiling Point		0.328 (lb/ft^3) 5.26 (kg/m^3)
Liquid Density		75.33 (lb/ft^3) 1207.0 (kg/m^3)
Liquid Heat Capacity		0.341 (Btu/lb•°F) 1.425 (kJ/kg•°K)
Vapor Heat Capacity at constant pressure		
	@ 1 ATM	0.203 Btu/lb•°F)
	@ 101.3 kPa	0.851 (kJ/kg•°K)
Heat of Vaporization at Boiling Point		93.3 (Btu/lb) 216.98 (kJ/kg)
Vapor Pressure		96.51 (Psia) 665.0 (kPa)
Liquid Thermal Conductivity		0.0469 (Btu/hr•ft•°F) 81.1 (W/m•°K)
Vapor Thermal Conductivity		0.0080 (Btu/hr•ft•°F) 13.8 (W/m•°K)
Liquid Viscosity		0.472 (lbm/ft•h) 194.9 (m Pa•s)
Vapor Viscosity		0.0283 (lbm/ft•h) 11.7 (m Pa•s)
% Volatiles by Volume		100
Solubility of Genetron 134a in water (wt. %)		0.15
Solubility of water in Genetron 134a		0.11
Flammability Limits in Air (vol. %)		None
Auto Ignition Temperature		1418°F 770°C
Ozone Depletion Potential (ODP)		0
Global Warming Potential (relative to CO_2 - 100 yr. time horizon)		1300

* NIST Refprop 7

Note: All data are at 77° (25°C) unless noted otherwise.

Specifications – Refrigeration Grade

Assay (min. wt. % of all Genetron 134a Isomers)	99.8%
Moisture (max. wt. %)	0.0010
High-boiling Residue, maximum volume percent	0.01
Chloride (max. wt. %)	0.0001
Total Acidity (max. wt. %)	0.0001
Non-condensibles in vapor phase (max. vol. %)	1.5

Performance Data

	Genetron 134a	CFC-12
Evaporating Pressure		
psig	9.10	11.7
kPa absolute	164	182
Condensing Pressure		
psig	97.0	93.2
kPa absolute	770	744
Compression Ratio	4.69	4.09
Compressor Discharge Temperature		
°F	97.9	100.1
°C	36.6	37.8
Temperature of Suction Gas		
°F	5	5
°C	-15	-15
Specific Volume of Suction Vapor		
cu. ft./lb	1.93	1.47
m3/kg	0.12	0.09
Latent Heat of Vaporization		
Btu/lb	90.1	68.8
kJ/kg	208.5	160.0
Net Refrigeration Effect		
Btu/lb	63.6	50.3
kJ/kg	147.9	117.0
Coefficient of Performance (C.O.P.)	4.61	4.70
Horsepower per ton of Refrigeration	1.02	1.00
Refrigerant Circulated per ton		
lbs/min.	3.15	3.98
per kw(g/s)	6.78	8.56
Compressor Suction Gas Volume		
per ton (cu. in./min.)	6.08	5.85
per kw (l/s)	0.82	0.79
Liquid Circulated per ton		
cu. in./min.	73.3	85.2
per kw (mL/s)	5.70	6.62

English Units: The data above indicates performance at Standard Ton Conditions (5°F evaporating and 86°F condensing).

SI Units: The data above at cooling load = 1kw (-15°C evaporaing and 30°C condensing)

Pressure vs. Temperature

Temp. °F	Pressure (psig)	Temp. °C	Pressure (bar-gauge)
-40	14.8 ("Hg Vac)	-40.0	-0.50
-35	12.5 ("Hg Vac)	-37.5	-0.43
-30	9.8 ("Hg Vac)	-35.0	-0.35
-25	6.9 ("Hg Vac)	-32.5	-0.26
-20	3.7 ("Hg Vac)	-30.0	-0.17
-15	0.1 ("Hg Vac)	-27.5	-0.06
-10	1.9	-25.0	0.05
-5	4.1	-22.5	0.18
0	6.5	-20.0	0.32
5	9.1	-17.5	0.47
10	11.9	-15.0	0.63
15	15.0	-12.5	0.81
20	18.4	-10.0	1.00
25	22.1	-7.5	1.20
30	26.1	-5.0	1.42
35	30.4	-2.5	1.66
40	35.0	0.0	1.92
45	40.1	2.5	2.19
50	45.4	5.0	2.49
55	51.2	7.5	2.80
60	57.4	10.0	3.14
65	64.0	12.5	3.49
70	71.1	15.0	3.87
75	78.7	17.5	4.28
80	86.7	20.0	4.71
85	95.2	22.5	5.16
90	104.3	25.0	5.64
95	113.9	27.5	6.15
100	124.2	30.0	6.69
105	135.0	32.5	7.26
110	146.4	35.0	7.86
115	158.4	37.5	8.49
120	171.2	40.0	9.16
125	184.6	42.5	9.85
130	198.7	45.0	10.59
135	213.6	47.5	11.36
140	229.2	50.0	12.17
145	245.7	52.5	13.02
150	262.9	55.0	13.91
		57.5	14.83
		60.0	15.81
		62.5	16.83
		65.0	17.90

Lubricants

Genetron® 134a is being used with polyalkylene glycol (PAG) and with polyol ester lubricants. Most automotive original equipment manufacturers have chosen specific PAG lubricants for their systems. For non-automotive applications, most compressor manufacturers are recommending specific polyol ester lubricants. Check with the equipment manufacturer for the recommended lubricants for their system.

Miscibility in Lubricants

Polyol esters and PAGs are available in a wide viscosity range from as low as 15 centistokes (cs) to more than 220 cs at 104°F (40°C). Their range of miscibilities can vary widely. Miscibility is the ability of the refrigerant/lubricant mixture to form a single liquid phase.

Many commercial polyol esters provide miscibility with Genetron 134a down to low temperatures. The Genetron 134a polyol ester lubricant miscibility curve is usually — but not always — convex (upward). The refrigerant/lubricant mixture is immiscible at low temperatures and becomes miscible as the mixture is heated. Such mixtures exhibit upper critical solution temperatures. The upper critical solution temperature is the temperature above which the refrigerant mixture will remain miscible over the entire concentration range.

Miscibility Genetron 134a and Polyol Ester Lubricant

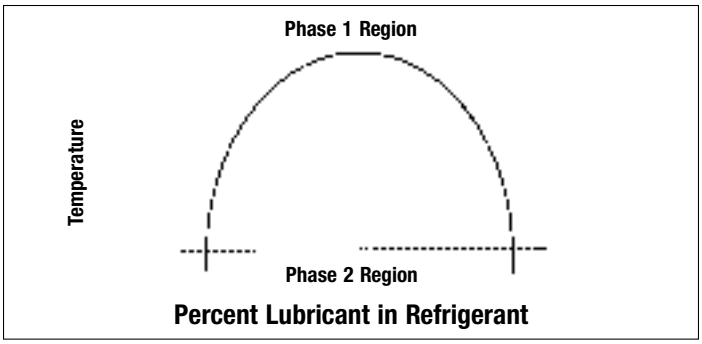

For Genetron 134a and PAGs, lower critical solution temperatures are typically found. The Genetron 134a/PAG mixture is usually miscible at lower temperatures, and becomes immiscible as the temperature is raised. For Genetron 134a/PAG mixtures, the lower critical solution temperature usually decreases with the increase in viscosity for groups of similar PAGs. The user should consult the lubricant manufacturer or call a Genetron® technical representative for more detailed information.

Miscibility Genetron 134a and PAG Lubricant

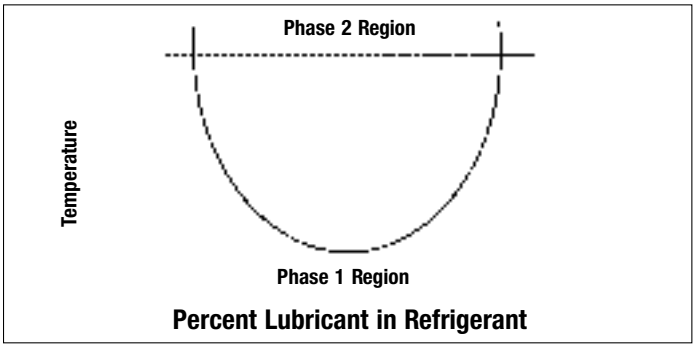

Copper Plating

Copper plating occurs when copper transfers from copper surfaces through the refrigerant/oil mixture to steel surfaces in the compressor. In some cases, this can affect clearance volumes in the compressor.

Laboratory sealed tube copper plating tests have been conducted for Genetron 134a with PAGs and polyol esters. As shown in the table below, the Genetron 134a/PAG tests were done at 300°F (149°C) for up to four months. Laboratory test results for Genetron 134a with PAGs indicated that this system produces less copper plating than the CFC 12/mineral oil system. This was found for both wet and dry systems. Tests under field conditions have indicated that copper plating can be a concern when the system is wet.

Copper plating for Genetron 134a as compared with CFC-12

System	Months	Total μ g/Cu
Genetron 134a/PAG/5000 ppm water	2	208
Genetron 134a/PAG/5000 ppm water	4	390
Genetron 134a/Mineral oil/5000 ppm water	2	591
CFC-12/Mineral oil/5000 ppm water	4	1143
Genetron 134a/Dry PAG	2	170
Genetron 134a/Dry PAG	4	174
CFC-12/Dry mineral oil	2	806
CFC-12/Dry mineral oil	4	1247

Tests also were done with Genetron 134a and polyol ester lubricants. They were conducted at temperatures between 300°F (149°C) and 400°F (204°C) for periods of two to four weeks. The lubricants were Castro1 SW 32 and Mobil EAL 22. They contained amounts of water that varied from 50 to 600 ppm. Visual observation revealed no copper plating after two weeks.

These laboratory tests indicate that, in the presence of fairly high concentrations of water and pure materials, refrigerant and oils do not cause copper plating. However, actual field systems experience wear and may contain other materials that promote

copper plating and may produce results that are different from laboratory tests. The laboratory tests are useful in pointing out that the refrigerant and lubricants alone may not be responsible for copper plating.

Stability with Metals

The overall stability of Genetron 134a is very good for virtually all applications where CFC-12 is suitable. Genetron 134a is compatible with steel, copper, aluminum and brass.

The stability of refrigerant/oil mixtures is determined using the ASHRAE 97 sealed-tube method. Studies were conducted using sealed tubes of Genetron 134a with both PAG and polyol ester lubricants. The refrigerant/oil mixture was studied in the presence of three metals: valve steel, copper and aluminum. The testing was conducted at a temperature of about 200°F to 400°F (93°C to 204°C) for one to four weeks and was judged through both visual observation and measuring the fluoride concentration produced in the tube.

On the basis of these tests, it is clear that Genetron 134a with either PAGs and polyol esters is as stable as CFC-12 with mineral oil. A typical example of such a test with polyol esters is shown in the table below. Copper, steel and aluminum are stable with Genetron 134a and the polyol esters studied. The stability of the refrigerant, as shown by the fluoride produced and the Genetron 134a purity, is excellent.

Stability of Genetron 134a with Polyol Ester Lubricants and Metals

Lubricant	Copper	Aluminum	Steel	Fluoride	Purity Genetron 134a
Mobil EAL 22	N.C.*	N.C.	N.C.	10mg	N.C.
Castrol SW 32	N.C.	N.C.	N.C.	10mg	N.C.

*N.C. = no change Note: Testing performed at 400°F (204°C) for 2 weeks

Chlorinated Materials and Refrigerants

There are three situations in which Genetron 134a and its associated lubricants might come into contact with chlorinated materials and refrigerants. They occur when:

1. A chlorinated solvent is used to clean or flush the system;

2. A system is retrofitted from CFC-12 to Genetron® 134a, or

3. CFC-12 is accidentally charged into a system that contains Genetron 134a.

It is recommended that chlorinated materials not be introduced into systems that use Genetron 134a with PAG or polyol ester lubricants. While performing retrofits, the service technician should follow appropriate retrofit guidelines to help ensure that residual chlorinated compounds are minimized. Genetron 134a alone is chemically compatible with all chlorinated materials. However, the PAG and polyol ester lubricants used with Genetron 134a are typically not compatible with all chlorinated materials. Chlorinated materials should not be introduced into Genetron 134a systems that use polyol ester or PAG lubricants without prior consultation with the equipment manufacturer.

Genetron 134a/CFC-12

Compatibility tests have been conducted to determine the compatibility of PAG lubricants and Genetron 134a spiked with varying levels of CFC-12. These tests show that up to about 0.5% CFC-12 can be present in the Genetron 134a before the decomposition of the PAG lubricant can be visually observed (test method involves observing color changes when the refrigerant oil mixture is at 400°F (204°C) for one week). At 300°F (149°C), up to 5% weight CFC-12 can be present in Genetron 134a before decomposition is observed.

In the case of polyol ester lubricants in wet systems, hydrolysis of the ester can be accelerated by hydrochloric acid from the breakdown of CFC-12. This can increase corrosion in the system. Some polyol esters are much less susceptible to this problem. The user should consult the compressor manufacturer for more information.

A second concern with respect to CFC-12 in Genetron 134a is that these two materials form an azeotrope whose pressure is higher than that of either component. The pressure in any system containing these two materials may be higher than expected, and could result in performance problems. Moreover, the difficulty in separating this azeotropic mixture will make recycling and reclamation difficult.

Equipment

Compatibility: Plastics and Elastomers

With the introduction of Genetron 134a, Honeywell in conjunction with other industry leaders, has conducted materials testing to evaluate the compatibility of materials used in refrigerant applications. The following list is a condensed sampling of the testing that has been performed to date. (Note: The compatibility of any specific material will be dependent on its formulation and history.) The ranking, although based on limited sampling, can serve as a useful guide.

Materials Compatibility

Material	Genetron 134a	Genetron 134a/PAG	Genetron 134a/ Polyol Esters
Ethylene Propylene Diene Terpolymer	S	S	S
Ethylene-Propylene copolymer	S	S	S
Chlorosulfonated Polyethylene	S	Us	Us
Polyisoprene	S	Su	U
Chlorinated Polyethylene	Su	Su	Us
Neoprene (Chloroprene)	S	S	Su
Epichlorohydrin	S	Su	Us
Polyvinylidene fluoride and copolymer of vinylidene fluoride and hexafluoropropylene	U	S	Us
Silicone	Us	S	Su
Polyurethane	S	U	Su
Nitrile	Su	Su	Su
H-NBR	S	Su	S
Butyl rubber	S	S	Su
Natural rubber	Su	U	U
Polysulfide	S	U	U
Nylon	S	Su	Su
Polytetrafluoroethylene	S	S	S
PEEK	S	S	S
ABS	S	U	U
Polypropylene	Su	Su	S
Polyphenylene sulfide	Su	U	Su
Polyethylene terephthalate	S	U	S
Polysulfone	S	Us	S
Polyimide	S	Su	Su
Polyetherimide	S	Su	S
Polyphthalamide	S	U	U
Polyamideimide	S	S	S
Acetal	S	U	U
Phenolic	S	S	Su
Epoxy resin	S	S	S

Note: S: Suitable, Su: Suitable with some exceptions, U: unsuitable, Us: Unsuitable with some exceptions. In either case, rankings should be used with caution since they are judgements based on limited sampling. Customers should consult the manufacturer or do further independent testing

Polyethylene Terephthalate (PET)

PET is used in hermetic compressors as slot liners and as electrical insulation. It may be embrittled in the presence of moisture and as a result of prolonged contact with PAGs. PET is compatible with most polyol esters.

Desiccants

There are three common types of desiccant materials that are used in making driers. They are molecular sieves, alumina and silica gel. Under some conditions the molecular sieve XH5, commonly used with CFC-12, is incompatible with Genetron 134a. Molecular sieves XH7 and XH9 are recommended by UOP (a major molecular sieve manufacturer) for use with Genetron 134a. In addition, each drier manufacturer has developed driers and filters that are compatible with Genetron 134a. Such driers can include all three types of drier materials.

Solubility of Water in Genetron 134a

The solubility of water in Genetron 134a is shown in the graph below. This solubility is comparable to that of water in HCFC-22.

Solubility of Water in Genetron 134a

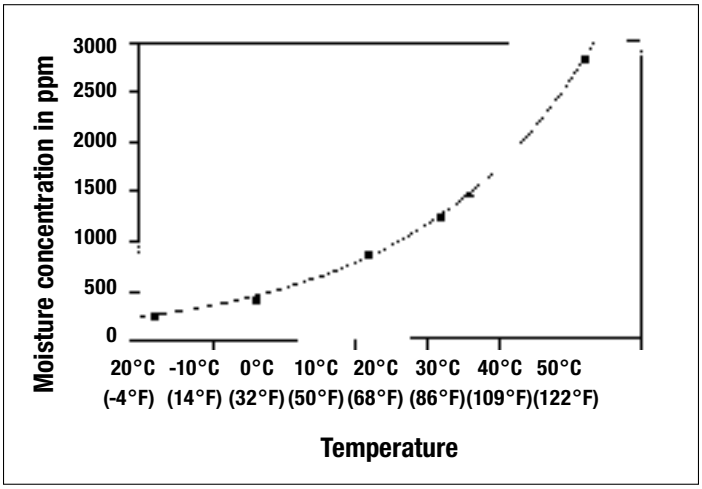

Safety

Toxicity

Genetron® 134a can be safely used in all of its intended applications, based on a review data developed by the Program for Alternative Fluorocarbon Toxicity Testing (PAFT I), an international consortium of which Honeywell is a charter member. However, the end-user should read the Material Safety Data Sheet (MSDS) before using Genetron 134a.

Inhalation

The American Industrial Hygiene Association (AIHA) has established a Workplace Environmental Exposure Level (WEEL) of 1000 parts per million (8- and 12-hour Time-Weighted Average) for Genetron 134a. Inhalation of the product's vapor may cause irritation. Vapor inhalation at high concentrations may result in asphyxiation or cardiac arrhythmia. If vapors are inhaled at high concentrations, cardiac irregularities and possibly cardiac arrest could occur. Under these conditions the heart may become sensitized. Do not give epinephrine (adrenaline) if over-exposure to Genetron 134a is suspected. When concentrations of Genetron 134a reach levels which reduce oxygen to 12-14% by displacement, symptoms of asphyxiation will occur. An individual exposed to high concentrations of Genetron 134a must be given medical attention immediately. Adequate ventilation must be provided at all times.

Skin and Eye Contact

Genetron 134a vapors can irritate the skin and eyes. In liquid form, it can freeze skin or eyes on contact. If skin contact should occur, flush the exposed area with lukewarm water until all the chemical is removed. If there is evidence of frostbite, soak in lukewarm water. Should eye contact occur, immediately flush with large amounts of luke-warm water for at least 15 minutes, lifting eyelids occasionally to facilitate irrigation. Seek medical attention as soon as possible.

Leaks

If a release of Genetron 134a vapor occurs, the area should be evacuated immediately. Protected personnel should de-energize or remove any ignition sources and address leak, if without risk. Vapors may concentrate near the floor, displacing available oxygen. Once the area is evacuated, it must be ventilated using blowers or fans to circulate the air at floor-level. Unprotected personnel should not return to the area until the air has been tested and determined safe. Leak-checking should never be done with a mixture of Genetron 134a and air, oxygen or other oxidizing materials. Leak-checking can be performed safely with a mixture of Genetron 134a and nitrogen.

Flammability

According to ASHRAE Standard 34, Genetron 134a is classified in safety group A1, i.e., it is non-flammable at 1 atm. pressure (101.3 kPa) and 64°F (18°C). As defined by the U.S. Department of Transportation (DOT) regulations, Genetron 134a has no flame limits, and is therefore non-flammable (Green Label).

Since Genetron 134a is non-flammable, Honeywell believes standard industrial-type electrical installations may be used. It is essential to review and comply with all local building codes and other applicable regulations and laws when using Genetron 134a or any other similar product.

Combustibility

Although Genetron 134a is non-flammable at ambient temperatures and atmospheric pressure, tests have shown it to be combustible at pressures as low as 5.5 psig (38 kPag) and a temperature of 350°F (177°C) when mixed with air concentrations generally greater than 60 percent by volume. At lower temperatures, higher pressures are required for combustibility.

Because of this combustibility potential under pressure, Genetron 134a and air, oxygen or other oxidizing materials should never be mixed in tanks or supply lines, or allowed to accumulate in storage tanks, vessels or systems for any purpose. Leak-checking should never be done with a mixture of Genetron 134a and air, oxygen or other oxidizing materials. Leak-checking can be performed safely with a mixture of Genetron 134a and nitrogen.

Thermal Stability

It is important to avoid exposing Genetron 134a to very high temperatures. When exposed to high temperatures, such as those found in flames, Genetron 134a vapors will decompose. This may produce toxic and irritating compounds. Pungent odors released will irritate the nose and throat and generally force evacuation of the area.

Genetron 134a is stable under normal operating conditions. Contact with certain red-hot metals may result in exothermic reactions and yield toxic and/or corrosive decomposition products. Specific materials to avoid include abraded aluminum surfaces and active metals such as sodium, potassium, calcium, powdered aluminum, magnesium and zinc.

Storage and Handling

Genetron® 134a cylinders must be clearly marked and kept in cool, dry and properly ventilated storage areas away from heat, flames, corrosive chemicals, fumes, explosives and otherwise protected from damage. Under no circumstances should anything be put into an empty cylinder. Empty returnable cylinders should be returned to Honeywell or your Genetron Wholesaler. Disposable JugsTM should be disposed of in an environmentally acceptable manner in accordance with applicable laws and regulations.

Keep cylinders of Genetron 134a out of direct sunlight, particularly in warm weather. Genetron 134a liquid expands significantly when heated, thereby reducing the amount of vapor space left in the cylinder. Once the cylinder becomes liquid-full, any further rise in temperature can cause the cylinder pressure relief device to activate potentially resulting in serious personal injury.

Never allow cylinder to get warmer than 125°F (52°C).

Cylinders should always be raised above dirt or damp floors to prevent rusting. This can be done by using a platform or parallel rails. All containers must be secured in place by means of a rack, chain or rope so they cannot tip, roll or accidentally strike each other or any other object. If a cylinder valve is broken off, rapid escape of the high pressure contents will propel the cylinder which could cause serious injury. Keep cylinder caps in place until the cylinder is in use.

The storage area should be away from corrosive chemicals or fumes to avoid damaging effects on the cylinder and threaded areas of the valve. Follow similar precautions for bulk storage and transport systems, assuring that proper design and operation satisfies the required pressure rating and also avoids corrosive external conditions, over-heating or over-filling. If a cylinder leak is detected, contact Honeywell for guidance.

Maintenance

A thorough pre-job review must be done to determine respiratory protection requirements, as well as any other safety equipment needed. Maintenance in areas where Genetron 134a has accumulated should be performed only after confirming that work area concentrations are below the permissible exposure level (PEL). This may be determined using a vapor-in-air analyzer capable of measuring the amount of airborne Genetron 134a. These vapors are heavier than air and can accumulate at floor level. When vapor concentrations are above the PEL, the area should be ventilated to reduce the vapor concentration to below the PEL before entry. Ventilate the area using fans and other air movers as necessary. If entry must be made to areas where vapor concentrations are above the PEL, appropriate respiratory protection should be used.

Federal occupational health and safety agencies often have legal requirements and guidelines for proper selection and use of respiratory protection. It is often the responsibility of the employer to ensure the safety of the employees performing the maintenance. Be sure to comply with applicable laws and guidelines for proper selection and use of respiratory protection. If the airborne concentration of refrigerant is unknown or at a particular threshold, the law may require the use of supplied air respirators. Particular work team and work zone entry procedures may also apply. Vessels, containers, transfer lines, pumps and other equipment should not be exposed to high-temperature sources (such as welding, brazing and open flames) until they have been thoroughly cleaned and found free of vapors. Exposure to these circumstances can cause fire, explosion and decomposition of refrigerant. This may result in the formation of toxic or corrosive compounds. Potential sources for further vapor releases should also be eliminated if possible.

When possible, maintenance or cleaning of equipment should be performed without entering the vessel. A tank or storage vessel may be a confined space. These spaces may have a configuration that can hinder activities and/or expose personnel to the risk of physical injury from entrapment, engulfment, or hazardous atmospheres. Depending on conditions and applicable regulations, a permit may be required to enter such vessels. If a tank must be entered, personnel should be required to use a formal tank entry procedure based on recognized safety principles and comply with all applicable regulations. The procedure would provide guidance for critical items such as but not limited to respiratory protection, safety equipment, work practice, and communication. Among the possible requirements of these procedures is the use of a fully qualified work team and placement of a confined space entry permit at the job site.

Leak Detection

Leak detectors can be used for pinpointing specific leaks or for monitoring an entire room on a continuous basis. Leak detection is important for refrigerant conservation, equipment protection and performance, reduction of emissions and protection of those coming in contact with the system. No leak testing should be performed with Genetron 134a and air, oxygen or other oxidizing materials in a system.

Types of Detectors

There are two types of leak detectors — leak pinpointers and area monitors. Before purchasing either type, several equipment factors should be considered, including detection limits, sensitivity and selectivity.

With regard to selectivity, there are three categories of leak detectors: nonselective, halogen-selective or compound- selective. In general, the complexity and cost of a leak detector increases as its specificity increases. Fluorescent dyes approved for use by the equipment manufacturer can be added to systems to help pinpoint leaks.

New installations should be checked for leaks prior to complete charging. Whenever a leak inspection is performed, check all factory and field joints throughout the system. For a system that has been in operation for some time, check for oil at joints and connections, as this may serve as an indication of a refrigerant leak at that location. This approach would not commonly be considered when leak checking a new system installation since it is much less likely that oil would have found its way to the leak. If a system has lost all or most of its refrigerant charge, the system must be pressurized to about 150psig in order to perform a leak check. Pressure can be restored for leak checking by adding Genetron® 134a using normal charging procedures or by using dry nitrogen. DO NOT USE AIR TO LEAK CHECK THE SYSTEM. At pressures above atmospheric, mixtures of air and any HCFC or HFC refrigerant will become combustible. For a system containing either or a mixture of refrigerant and nitrogen, an electronic leak detector can be used. The leak detector must be capable of detecting a hydrofluorocarbon (HFC) refrigerant. Older leak detectors designed for R-22 (or other HCFCs) will not be sensitive enough to effectively detect HFC refrigerants. Halide torches cannot effectively detect HFC refrigerant leaks.

NITROGEN IS A HIGH PRESSURE GAS. REMEMBER TO USE A PRESSURE REGULATOR COMING OFF THE NITROGEN TANK TO AVOID ANY RISK OF SEVERE PERSONAL INJURY.

A simple way to test for leaks is to use a solution of soap and water. Commercial soap solutions for leak detection tend to be more effective. Apply the solution to the joints and connections. Generation of bubbles will indicate a pinhole leak. Several minutes may be required to generate a bubble in the case of a very small leak. When it is suspected that essentially no refrigerant remains in the system, the above method can be used to detect leaking nitrogen gas. However, the most convenient and effective means to detect a leak when Genetron 134a is in the system is to use an electronic leak detector designed for HFC refrigerants. When a leak is found, the refrigerant must be recovered and the leak repaired prior to final charging and operation. If the refrigerant charge is 50 pounds or more, the system is subject to leak repair requirements under the Refrigerant Recycling Regulations of Section 608 of the Clean Air Act Amendments of 1990. In this case, the equipment owner must keep a record of the date and type of service performed and the amount of refrigerant added.

Retrofitting

Commercial Refrigeration

Commercial refrigeration applications where Genetron 134a is a suitable retrofit refrigerant include supermarket cases, walk-in coolers, beverage machines, and water coolers. The use of Genetron® 134a should be limited to applications where the evaporator temperature is above -10°F (-23°C).

Automotive Air-Conditioning Systems

Genetron 134a is a retrofit refrigerant replacing CFC-12 in automobile air-conditioning systems. Many automobile manufacturers are introducing retrofit kits that can utilize Genetron 134a, enabling system conversions.

Commercial Air-Conditioning Systems

Genetron 134a is a viable retrofit fluid for centrifugal chillers running CFC-12. We recommend consulting the original equipment manufacturer before performing any retrofit.

Home Appliances

Genetron 134a can replace CFC-12 in home refrigerators. Consult the original equipment manufacturer before performing any retrofit.

Retrofit Lubricants

Genetron 134a is not a “drop in” replacement for CFC-12. Mineral oils and alkylbenzene lubricants are immiscible with Genetron 134a and must therefore be replaced with either PAG or polyol ester lubricants. Consult the original equipment manufacturer for the recommended lubricants.

Retrofit Procedures

Retrofit procedures have been developed to help technicians perform successful retrofits of CFC-12 systems utilizing positive-displacement (reciprocating, rotary, scroll or screw) compressors with Genetron 134a. However, these procedures should not be used as a substitute for the equipment manufacturer’s specific recommendations.

For further information on retrofitting with Genetron 134a, refer to “Refrigeration Retrofit Guidelines”, G-525-100.

Environmental Considerations

Reclamation

The Clean Air Act Amendments of 1990 require mandatory recycling and reclamation of Genetron 134a during maintenance, service or repair of air-conditioning and refrigeration equipment. Your Genetron Wholesaler offers a refrigerant reclamation program for Genetron 134a.

Waste

Genetron 134a is a halogenated hydrocarbon. Treatment or disposal of wastes generated by use of this product may require special consideration, depending on the nature of the wastes and the means of discharge, treatment or disposal.

If discarded unused, Genetron 134a is not considered a "hazardous waste" by the Resource Conservation and Recovery Act (RCRA). Because Genetron 134a is considered to have minimum biodegradability, care should be taken to avoid releases to the environment.

The disposal of Genetron 134a may be subject to federal, state and local regulations. Users should conduct disposal operations in compliance with applicable federal, state and local laws and regulations. Appropriate regulatory agencies also should be consulted before discharging or disposing of waste materials.

Packaging

Genetron 134a is available in a variety of containers equipped with standard valve outlets. They include 30-lb non-refillable cylinders, 125-lb. returnable cylinders, one ton (1750-lb.) returnable tanks, bulk tank trailers and isotanks.

In addition, the 30-lb. non-refillable cylinder is available with a 1/2" – 16 ACME (CGA-167) valve outlet specifically designed for automotive air-conditioning service equipment. Please specify the necessary valve when ordering.

Technical Assistance

Honeywell technical specialists are available to assist customers on all phases of Genetron 134a use. The Genetron refrigerants sales staff can offer plans for safe and effective storage, handling and use of Genetron products. For further information and/or technical assistance on Genetron 134a, please contact any of our worldwide locations. Contact information for your country or region can be found on the back cover.

Genetron®134a Mollier Chart (IP Units)

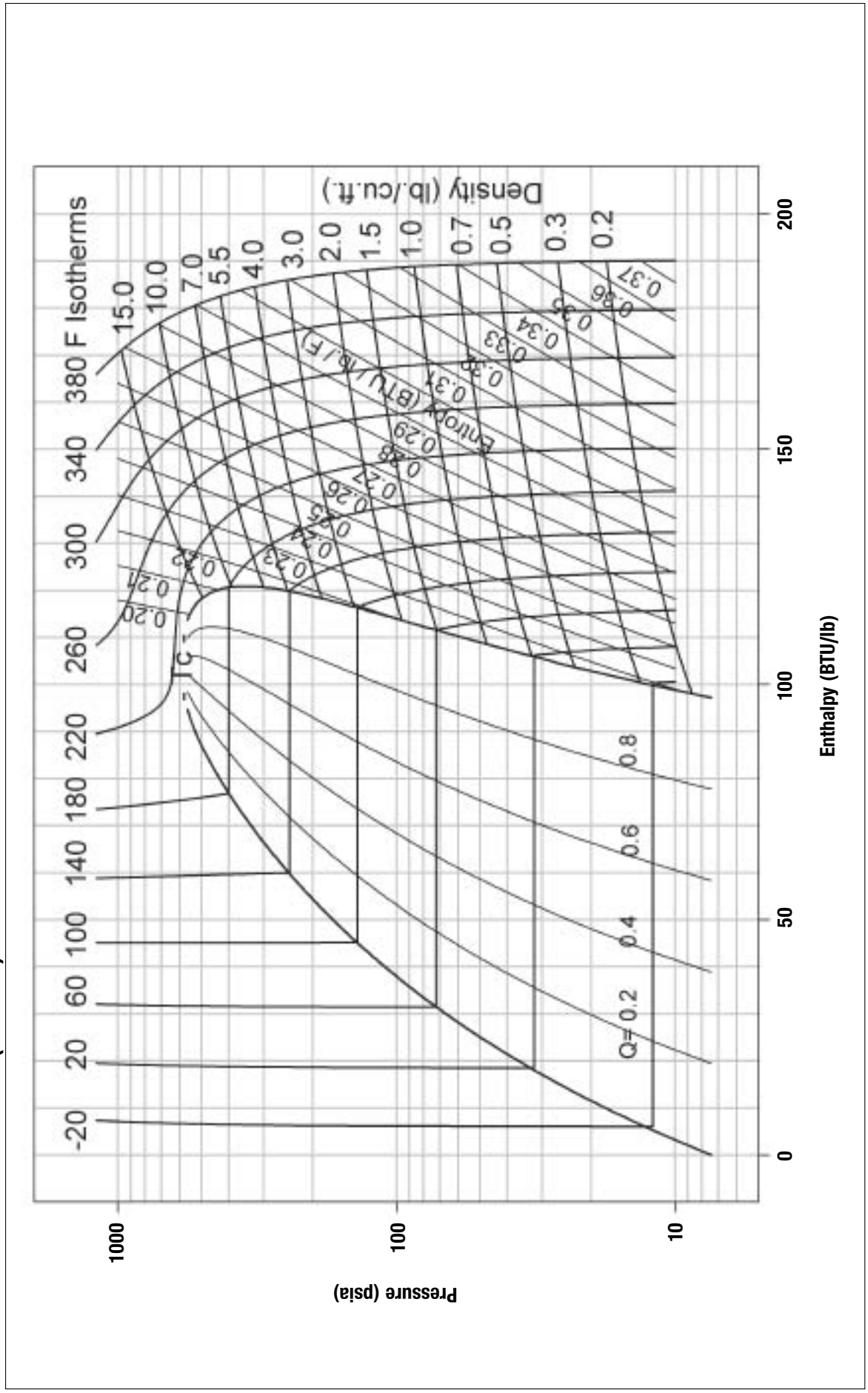

Genetron®134a Mollier Chart (SI Units)

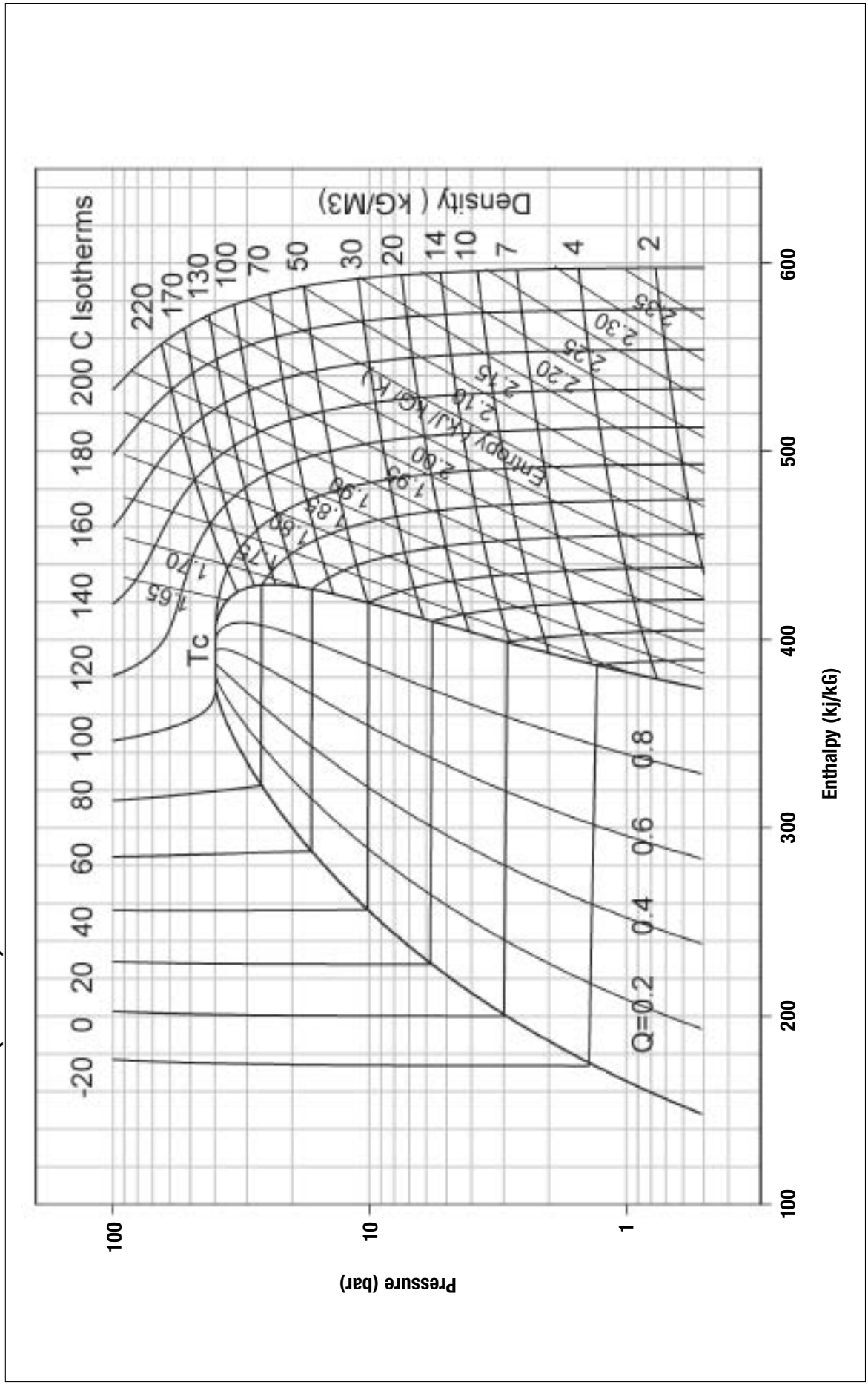

Thermodynamic Table — English Units

Temp °F	Pressure psia	Liquid Density lb/ft^3	Vapor volume ft^3/lb	Enthalpy H_{liq} Btu/lb	Enthalpy Dh Btu/lb	Enthalpy H_{vap} Btu/lb	Entropy S_{liq} Btu/lb °F	Entropy S_{vap} Btu/lb °F
-40.0	7.4	88.50	5.7839	0.00	97.17	97.17	0.0000	0.2315
-38.0	7.9	88.30	5.4778	0.60	96.87	97.47	0.0014	0.2312
-36.0	8.3	88.10	5.1910	1.20	96.57	97.77	0.0028	0.2308
-34.0	8.8	87.90	4.9221	1.80	96.28	98.08	0.0043	0.2304
-32.0	9.3	87.70	4.6698	2.41	95.97	98.38	0.0057	0.2301
-30.0	9.9	87.49	4.4330	3.01	95.67	98.68	0.0071	0.2297
-28.0	10.4	87.29	4.2104	3.62	95.36	98.98	0.0085	0.2294
-26.0	11.0	87.09	4.0013	4.23	95.05	99.28	0.0099	0.2291
-24.0	11.6	86.88	3.8045	4.83	94.75	99.58	0.0113	0.2288
-22.0	12.2	86.67	3.6193	5.44	94.44	99.88	0.0127	0.2285
-20.0	12.9	86.47	3.4449	6.05	94.13	100.18	0.0141	0.2282
-18.0	13.6	86.26	3.2805	6.66	93.82	100.48	0.0154	0.2279
-16.0	14.3	86.05	3.1255	7.27	93.51	100.78	0.0168	0.2276
-14.0	15.0	85.85	2.9793	7.89	93.19	101.08	0.0182	0.2273
-12.0	15.8	85.64	2.8413	8.50	92.88	101.38	0.0196	0.2270
-10.0	16.6	85.43	2.7109	9.12	92.56	101.68	0.0209	0.2268
-8.0	17.5	85.22	2.5877	9.73	92.24	101.97	0.0223	0.2265
-6.0	18.3	85.01	2.4712	10.35	91.92	102.27	0.0237	0.2263
-4.0	19.3	84.79	2.3610	10.97	91.60	102.57	0.0250	0.2260
-2.0	20.2	84.58	2.2567	11.59	91.27	102.86	0.0264	0.2258
0.0	21.2	84.37	2.1579	12.21	90.95	103.16	0.0277	0.2256
2.0	22.2	84.15	2.0643	12.83	90.62	103.45	0.0291	0.2253
4.0	23.2	83.94	1.9756	13.45	90.29	103.74	0.0304	0.2251
6.0	24.3	83.72	1.8914	14.08	89.95	104.03	0.0317	0.2249
8.0	25.5	83.51	1.8116	14.70	89.63	104.33	0.0331	0.2247
10.0	26.6	83.29	1.7357	15.33	89.29	104.62	0.0344	0.2245
12.0	27.8	83.07	1.6637	15.96	88.95	104.91	0.0357	0.2243
14.0	29.1	82.85	1.5953	16.59	88.61	105.20	0.0371	0.2241
16.0	30.4	82.63	1.5302	17.22	88.26	105.48	0.0384	0.2239
18.0	31.7	82.41	1.4683	17.85	87.92	105.77	0.0397	0.2238
20.0	33.1	82.19	1.4094	18.48	87.58	106.06	0.0410	0.2236
22.0	34.6	81.96	1.3534	19.12	87.22	106.34	0.0423	0.2234
24.0	36.0	81.74	1.3000	19.75	86.88	106.63	0.0436	0.2232
26.0	37.6	81.51	1.2491	20.39	86.52	106.91	0.0449	0.2231
28.0	39.2	81.29	1.2006	21.03	86.16	107.19	0.0462	0.2229
30.0	40.8	81.06	1.1543	21.67	85.80	107.47	0.0476	0.2228
32.0	42.5	80.83	1.1102	22.31	85.44	107.75	0.0489	0.2226
34.0	44.2	80.60	1.0681	22.95	85.08	108.03	0.0501	0.2225
36.0	46.0	80.37	1.0279	23.60	84.71	108.31	0.0514	0.2223
38.0	47.8	80.14	0.9895	24.24	84.34	108.58	0.0527	0.2222
40.0	49.7	79.90	0.9528	24.89	83.97	108.86	0.0540	0.2221
42.0	51.7	79.67	0.9177	25.54	83.59	109.13	0.0553	0.2219
44.0	53.7	79.43	0.8842	26.19	83.21	109.40	0.0566	0.2218
46.0	55.8	79.20	0.8521	26.84	82.83	109.67	0.0579	0.2217
48.0	57.9	78.96	0.8214	27.49	82.45	109.94	0.0592	0.2216
50.0	60.1	78.72	0.7920	28.15	82.06	110.21	0.0604	0.2214
52.0	62.4	78.48	0.7638	28.81	81.66	110.47	0.0617	0.2213
54.0	64.7	78.24	0.7369	29.47	81.27	110.74	0.0630	0.2212
56.0	67.1	77.99	0.7110	30.13	80.87	111.00	0.0643	0.2211
58.0	69.6	77.75	0.6862	30.79	80.47	111.26	0.0655	0.2210
60.0	72.1	77.50	0.6625	31.45	80.07	111.52	0.0668	0.2209
62.0	74.7	77.25	0.6397	32.12	79.66	111.78	0.0681	0.2208
64.0	77.4	77.00	0.6178	32.79	79.25	112.04	0.0693	0.2207
66.0	80.1	76.75	0.5968	33.45	78.84	112.29	0.0706	0.2206
68.0	82.9	76.49	0.5766	34.13	78.41	112.54	0.0719	0.2205

Thermodynamic Table — English Units — continued

Temp °F	Pressure psia	Liquid Density lb/ft^3	Vapor volume ft^3/lb	Enthalpy H_{liq} Btu/lb	Enthalpy Dh Btu/lb	Enthalpy H_{vap} Btu/lb	Entropy S_{liq} Btu/lb °F	Entropy S_{vap} Btu/lb °F
70.0	85.8	76.24	0.5572	34.80	78.00	112.80	0.0731	0.2204
72.0	88.8	75.98	0.5386	35.47	77.57	113.04	0.0744	0.2203
74.0	91.8	75.72	0.5207	36.15	77.14	113.29	0.0756	0.2202
76.0	94.9	75.46	0.5035	36.83	76.71	113.54	0.0769	0.2201
78.0	98.1	75.20	0.4870	37.51	76.27	113.78	0.0781	0.2200
80.0	101.4	74.94	0.4710	38.20	75.82	114.02	0.0794	0.2199
82.0	104.7	74.67	0.4557	38.88	75.38	114.26	0.0806	0.2198
84.0	108.2	74.40	0.4410	39.57	74.92	114.49	0.0819	0.2197
86.0	111.7	74.13	0.4268	40.26	74.47	114.73	0.0831	0.2196
88.0	115.3	73.86	0.4131	40.95	74.01	114.96	0.0844	0.2195
90.0	119.0	73.58	0.3999	41.65	73.54	115.19	0.0856	0.2194
92.0	122.8	73.31	0.3872	42.34	73.07	115.41	0.0869	0.2193
94.0	126.7	73.03	0.3749	43.04	72.60	115.64	0.0881	0.2193
96.0	130.6	72.74	0.3631	43.74	72.12	115.86	0.0894	0.2192
98.0	134.7	72.46	0.3517	44.45	71.62	116.07	0.0906	0.2191
100.0	138.9	72.17	0.3407	45.15	71.14	116.29	0.0919	0.2190
102.0	143.1	71.88	0.3301	45.86	70.64	116.50	0.0931	0.2189
104.0	147.4	71.59	0.3198	46.58	70.13	116.71	0.0944	0.2188
106.0	151.9	71.29	0.3099	47.29	69.63	116.92	0.0956	0.2187
108.0	156.4	70.99	0.3004	48.01	69.11	117.12	0.0969	0.2186
110.0	161.1	70.69	0.2911	48.73	68.59	117.32	0.0981	0.2185
112.0	165.8	70.39	0.2822	49.45	68.06	117.51	0.0994	0.2184
114.0	170.7	70.08	0.2735	50.18	67.52	117.70	0.1006	0.2183
116.0	175.6	69.77	0.2652	50.91	66.98	117.89	0.1019	0.2182
118.0	180.7	69.45	0.2571	51.65	66.43	118.08	0.1031	0.2181
120.0	185.9	69.14	0.2493	52.38	65.88	118.26	0.1044	0.2180
122.0	191.1	68.81	0.2417	53.12	65.31	118.43	0.1056	0.2179
124.0	196.5	68.49	0.2344	53.87	64.74	118.61	0.1069	0.2178
126.0	202.0	68.16	0.2273	54.61	64.16	118.77	0.1081	0.2177
128.0	207.7	67.83	0.2204	55.36	63.58	118.94	0.1094	0.2175
130.0	213.4	67.49	0.2137	56.12	62.97	119.09	0.1106	0.2174
132.0	219.3	67.15	0.2073	56.88	62.37	119.25	0.1119	0.2173
134.0	225.2	66.80	0.2010	57.64	61.76	119.40	0.1131	0.2172
136.0	231.3	66.45	0.1949	58.41	61.13	119.54	0.1144	0.2170
138.0	237.6	66.09	0.1890	59.18	60.50	119.68	0.1157	0.2169
140.0	243.9	65.73	0.1833	59.95	59.86	119.81	0.1169	0.2167
142.0	250.4	65.36	0.1778	60.73	59.20	119.93	0.1182	0.2166
144.0	257.0	64.99	0.1724	61.52	58.53	120.05	0.1195	0.2164
146.0	263.7	64.61	0.1671	62.31	57.85	120.16	0.1207	0.2163
148.0	270.6	64.22	0.1620	63.11	57.16	120.27	0.1220	0.2161
150.0	277.6	63.83	0.1571	63.91	56.46	120.37	0.1233	0.2159

Thermodynamic Table — SI Units

Temp °F	Pressure kPa	Liquid Density kg/m^3	Vapor volume m^3/kg	Enthalpy H_{liq} kJ/kg	Enthalpy Δh kJ/kg	Enthalpy H_{vap} kJ/kg	Entropy S_{liq} kJ/kg °C	Entropy S_{vap} kJ/kg °C
-40.0	51	1418	0.3611	148.14	225.86	374.00	0.7956	1.7643
-39.0	54	1415	0.3438	149.40	225.24	374.64	0.8010	1.7629
-38.0	57	1412	0.3276	150.66	224.61	375.27	0.8063	1.7615
-37.0	60	1409	0.3122	151.92	223.98	375.90	0.8117	1.7602
-36.0	63	1406	0.2977	153.18	223.36	376.54	0.8170	1.7588
-35.0	66	1403	0.2840	154.44	222.73	377.17	0.8223	1.7575
-34.0	70	1400	0.2711	155.71	222.09	377.80	0.8276	1.7563
-33.0	73	1397	0.2589	156.98	221.45	378.43	0.8329	1.7550
-32.0	77	1394	0.2473	158.25	220.81	379.06	0.8381	1.7538
-31.0	80	1391	0.2363	159.52	220.17	379.69	0.8434	1.7526
-30.0	84	1388	0.2259	160.79	219.53	380.32	0.8486	1.7515
-29.0	88	1385	0.2161	162.07	218.88	380.95	0.8538	1.7503
-28.0	93	1382	0.2068	163.34	218.23	381.57	0.8591	1.7492
-27.0	97	1379	0.1980	164.62	217.58	382.20	0.8642	1.7482
-26.0	102	1376	0.1896	165.90	216.92	382.82	0.8694	1.7471
-25.0	106	1373	0.1816	167.19	216.26	383.45	0.8746	1.7461
-24.0	111	1370	0.1741	168.47	215.60	384.07	0.8798	1.7451
-23.0	116	1367	0.1669	169.76	214.93	384.69	0.8849	1.7441
-22.0	122	1364	0.1601	171.05	214.27	385.32	0.8900	1.7432
-21.0	127	1361	0.1536	172.34	213.60	385.94	0.8951	1.7422
-20.0	133	1358	0.1474	173.64	212.91	386.55	0.9002	1.7413
-19.0	139	1355	0.1415	174.93	212.24	387.17	0.9053	1.7404
-18.0	145	1352	0.1359	176.23	211.56	387.79	0.9104	1.7396
-17.0	151	1349	0.1306	177.53	210.87	388.40	0.9155	1.7387
-16.0	157	1346	0.1255	178.83	210.19	389.02	0.9205	1.7379
-15.0	164	1343	0.1207	180.14	209.49	389.63	0.9256	1.7371
-14.0	171	1340	0.1161	181.44	208.80	390.24	0.9306	1.7363
-13.0	178	1337	0.1117	182.75	208.10	390.85	0.9356	1.7355
-12.0	185	1333	0.1074	184.07	207.39	391.46	0.9407	1.7348
-11.0	193	1330	0.1034	185.38	206.68	392.06	0.9457	1.7341
-10.0	201	1327	0.0996	186.70	205.96	392.66	0.9506	1.7334
-9.0	209	1324	0.0959	188.02	205.25	393.27	0.9556	1.7327
-8.0	217	1321	0.0924	189.34	204.53	393.87	0.9606	1.7320
-7.0	225	1318	0.0891	190.66	203.81	394.47	0.9656	1.7313
-6.0	234	1314	0.0859	191.99	203.07	395.06	0.9705	1.7307
-5.0	243	1311	0.0828	193.32	202.34	395.66	0.9754	1.7300
-4.0	253	1308	0.0799	194.65	201.60	396.25	0.9804	1.7294
-3.0	262	1305	0.0771	195.98	200.86	396.84	0.9853	1.7288
-2.0	272	1301	0.0744	197.32	200.11	397.43	0.9902	1.7282
-1.0	282	1298	0.0718	198.66	199.36	398.02	0.9951	1.7276
0.0	293	1295	0.0693	200.00	198.60	398.60	1.0000	1.7271
1.0	304	1291	0.0669	201.34	197.85	399.19	1.0049	1.7265
2.0	315	1288	0.0647	202.69	197.08	399.77	1.0098	1.7260
3.0	326	1285	0.0625	204.04	196.30	400.34	1.0146	1.7255
4.0	338	1281	0.0604	205.40	195.52	400.92	1.0195	1.7250
5.0	350	1278	0.0584	206.75	194.74	401.49	1.0243	1.7245
6.0	362	1275	0.0564	208.11	193.95	402.06	1.0292	1.7240
7.0	375	1271	0.0546	209.47	193.16	402.63	1.0340	1.7235
8.0	388	1268	0.0528	210.84	192.36	403.20	1.0388	1.7230
9.0	401	1264	0.0511	212.21	191.55	403.76	1.0437	1.7226
10.0	415	1261	0.0494	213.58	190.74	404.32	1.0485	1.7221
11.0	429	1257	0.0479	214.95	189.93	404.88	1.0533	1.7217
12.0	443	1254	0.0463	216.33	189.10	405.43	1.0581	1.7212
13.0	458	1250	0.0449	217.71	188.27	405.98	1.0629	1.7208
14.0	473	1247	0.0435	219.09	187.44	406.53	1.0677	1.7204

Thermodynamic Table — SI Units — continued

Temp °F	Pressure kPa	Liquid Density kg/m^3	Vapor volume m^3/kg	Enthalpy H_{liq} kJ/kg	Enthalpy Δh kJ/kg	Enthalpy H_{vap} kJ/kg	Entropy S_{liq} kJ/kg °C	Entropy S_{vap} kJ/kg °C
15.0	488	1243	0.0421	220.48	186.59	407.07	1.0724	1.7200
16.0	504	1240	0.0408	221.87	185.74	407.61	1.0772	1.7196
17.0	521	1236	0.0395	223.26	184.89	408.15	1.0820	1.7192
18.0	537	1233	0.0383	224.66	184.03	408.69	1.0867	1.7188
19.0	554	1229	0.0371	226.06	183.16	409.22	1.0915	1.7184
20.0	572	1225	0.0360	227.47	182.28	409.75	1.0962	1.7180
21.0	590	1222	0.0349	228.88	181.39	410.27	1.1010	1.7177
22.0	608	1218	0.0339	230.29	180.50	410.79	1.1057	1.7173
23.0	627	1214	0.0328	231.70	179.61	411.31	1.1105	1.7169
24.0	646	1210	0.0319	233.12	178.70	411.82	1.1152	1.7166
25.0	665	1207	0.0309	234.55	177.78	412.33	1.1199	1.7162
26.0	685	1203	0.0300	235.97	176.87	412.84	1.1246	1.7159
27.0	706	1199	0.0291	237.40	175.94	413.34	1.1294	1.7155
28.0	727	1195	0.0283	238.84	175.00	413.84	1.1341	1.7152
29.0	748	1191	0.0274	240.28	174.05	414.33	1.1388	1.7148
30.0	770	1187	0.0266	241.72	173.10	414.82	1.1435	1.7145
31.0	793	1184	0.0259	243.17	172.13	415.30	1.1482	1.7142
32.0	815	1180	0.0251	244.62	171.16	415.78	1.1529	1.7138
33.0	839	1176	0.0244	246.08	170.18	416.26	1.1576	1.7135
34.0	863	1172	0.0237	247.54	169.18	416.72	1.1623	1.7131
35.0	887	1168	0.0230	249.01	168.18	417.19	1.1670	1.7128
36.0	912	1163	0.0224	250.48	167.17	417.65	1.1717	1.7124
37.0	937	1159	0.0218	251.95	166.15	418.10	1.1764	1.7121
38.0	963	1155	0.0211	253.43	165.12	418.55	1.1811	1.7118
39.0	990	1151	0.0205	254.92	164.07	418.99	1.1858	1.7114
40.0	1017	1147	0.0200	256.41	163.02	419.43	1.1905	1.7111
41.0	1044	1142	0.0194	257.91	161.95	419.86	1.1952	1.7107
42.0	1072	1138	0.0189	259.41	160.87	420.28	1.1999	1.7103
43.0	1101	1134	0.0183	260.91	159.79	420.70	1.2046	1.7100
44.0	1130	1129	0.0178	262.43	158.68	421.11	1.2092	1.7096
45.0	1160	1125	0.0173	263.94	157.58	421.52	1.2139	1.7092
46.0	1190	1121	0.0169	265.47	156.45	421.92	1.2186	1.7089
47.0	1221	1116	0.0164	267.00	155.31	422.31	1.2233	1.7085
48.0	1253	1112	0.0160	268.53	154.16	422.69	1.2280	1.7081
49.0	1285	1107	0.0155	270.07	153.00	423.07	1.2327	1.7077
50.0	1318	1102	0.0151	271.62	151.82	423.44	1.2375	1.7072
51.0	1351	1098	0.0147	273.18	150.62	423.80	1.2422	1.7068
52.0	1385	1093	0.0143	274.74	149.41	424.15	1.2469	1.7064
53.0	1420	1088	0.0139	276.31	148.18	424.49	1.2516	1.7059
54.0	1455	1083	0.0135	277.89	146.94	424.83	1.2563	1.7055
55.0	1492	1078	0.0131	279.47	145.68	425.15	1.2611	1.7050
56.0	1528	1073	0.0128	281.06	144.41	425.47	1.2658	1.7045
57.0	1566	1068	0.0124	282.66	143.11	425.77	1.2705	1.7040
58.0	1604	1063	0.0121	284.27	141.80	426.07	1.2753	1.7035
59.0	1642	1058	0.0118	285.88	140.48	426.36	1.2801	1.7030
60.0	1682	1053	0.0114	287.50	139.13	426.63	1.2848	1.7024
61.0	1722	1048	0.0111	289.14	137.75	426.89	1.2896	1.7019
62.0	1763	1042	0.0108	290.78	136.36	427.14	1.2944	1.7013
63.0	1804	1037	0.0105	292.43	134.95	427.38	1.2992	1.7006
64.0	1847	1031	0.0102	294.09	133.52	427.61	1.3040	1.7000
65.0	1890	1026	0.0100	295.76	132.06	427.82	1.3088	1.6993
66.0	1934	1020	0.0097	297.44	130.58	428.02	1.3137	1.6987

Worldwide Sales Offices

For more information contact your
Honeywell Refrigerants representative

United States
Honeywell Chemicals
101 Columbia Road
Morristown, NJ 07962-1053
Phone: 800-631-8138
Fax: 973-455-6395

Latin America-Caribbean
Honeywell Chemicals Mexico
Constituyentes 900
Col. Lomas Altas
C.P. 11950, Mexico DF
Mexico
Phone: 52-55-5549-0313
Fax: 52-55-5544-9803

Canada
Honeywell Asca. Inc.
3333 Unity Drive
Mississauga, Ontario
L5L 3S6
Phone: 905-608-6325
Fax: 905-608-6327

Asia-Pacific
Honeywell (China) Co., ltd.
No 430, Li Bing Road
Zhang Jiang Hi-Tech Park
Pudong New Area, Shanghai 201203
China
Phone: 86-21-2894-2000
Fax: 86-21-5855-2719

Honeywell Chemicals Inc., Japan
New Pier Takeshiba
South Tower Building, 20th Floor
1-16-1 Kaigan, Minato-ku,
Tokyo, Japan
Phone: 81-3-6730-7083
Fax: 81-3-6730-7221

Honeywell Chemicals, Korea
6F Janghakjaedan, B/D 44-1
Bangpo-Dong, Seocho-Ku
Seoul 137040, Korea
Phone: 8-22-595-0204
Fax: 8-22-595-4964

Honeywell Specialty Chemicals (Singapore) Pte. Ltd.
17 Changi Business Park Central 1
Honeywell Building
Singapore 486073
Phone: 65-6355-2828
Fax: 65-6783-2947

Honeywell International
71 Queens Road, Ground Floor
Melbourne, Victoria 3004
Australia
Phone: 61-3-9529-1411
Fax: 61-3-9510-9837

Northern and Central Europe
Honeywell Belgium NV
Haasrode Research Park
Grauwmeer 1
3001 Heverlee
Belgium
Phone: 32-16-39-1278
Fax: 32-16-39-1277

Southern Europe, Middle East and Africa
Honeywell Fluorine Products Italia S.r.l.
Viale De Gasperi 19
20020 Lainate MI
Italia
Phone: +39-02-9379.6777 (ext 24 / 25 or 26)

www.honeywell.com/genetron

Customer Service

To place an order from anywhere in the
Continental United States, Hawaii and
the Caribbean:

Phone: 800-522-8001
Fax: 800-458-9073

In Canada:
Phone: 800-553-9749
Fax: 800-553-9750

Outside these areas:
Phone: 973-455-6300
Fax: 973-455-2763

Northern and Central Europe
Phone: +32-16-391.209
Phone: +32-16-391.265
Fax: +32-16-391.235

Southern Europe, Middle East and Africa
Phone: +39-02-9379.6777 (ext. 24 / 25 and 26)
Fax: +39-02-9379.6761

Honeywell

G 525-009
Printed in U.S.A.
© 2006 Honeywell International Inc.

M&M REFRIGERATION

STANDARD HORIZONTAL HIGH PRESSURE RECEIVERS

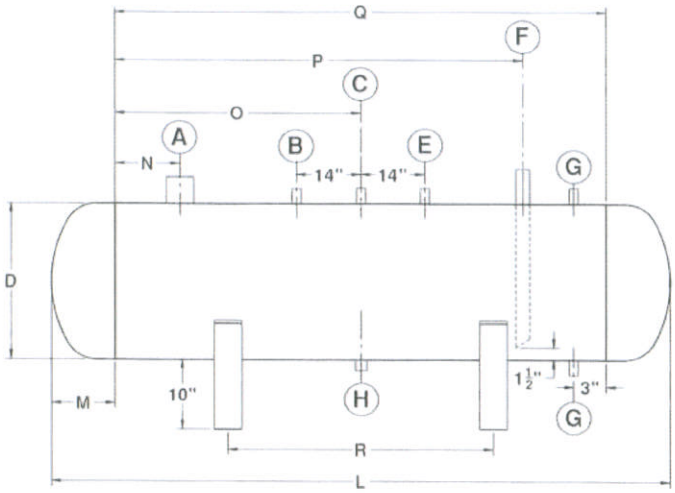

LEGEND

Nozzle	Description	Connection
A	Liquid Inlet	Stub
B	Purge	Coupling
C	Relief	Coupling
E	Equalizer	Stub
F	Liquid Outlet	Stub
G	Level Column	Stub
H	Drain	Coupling

MODEL #	A	B	C	D	E	F	G	H	L	M	N	O	P	Q	R	Weight (Lb)	Vol. (Cu. Ft.)	R-717 (Lb)
HR-20-110	1-1/2"	1/2"	1/2"	20"	3/4"	1"	3/4"	3/4"	110-3/4"	7-3/8"	3"	48"	78"	96"	55"	675	18.8	551
HR-20-134	1-1/2"	1/2"	1/2"	20"	3/4"	1"	3/4"	3/4"	134-3/4"	7-3/8"	3"	60"	102"	120"	67"	775	23.2	680
HR-24-136	2"	1/2"	3/4"	24"	3/4"	1-1/4"	3/4"	3/4"	136-1/2"	8-1/4"	3"	60"	102"	120"	68"	1340	33.0	967
HR-24-160	2"	1/2"	3/4"	24"	3/4"	1-1/4"	3/4"	3/4"	160-1/2"	8-1/4"	3"	72"	126"	144"	80"	1530	39.2	1148
HR-24-184	2"	1/2"	3/4"	24"	3/4"	1-1/4"	3/4"	3/4"	184-1/2"	8-1/4"	3"	84"	150"	168"	92"	1720	45.4	1330
HR-30-163	2-1/2"	1/2"	3/4"	30"	1"	1-1/4"	3/4"	3/4"	163-1/2"	9-3/4"	4"	72"	126"	144"	82"	1955	62.8	1840
HR-30-187	2-1/2"	1/2"	3/4"	30"	1"	1-1/4"	3/4"	3/4"	187-1/2"	9-3/4"	4"	84"	150"	168"	94"	2190	72.6	2127
HR-30-211	2-1/2"	1/2"	3/4"	30"	1"	1-1/4"	3/4"	3/4"	211-1/2"	9-3/4"	4"	96"	174"	192"	106"	2430	82.4	2414
HR-36-166	3"	1/2"	3/4"	36"	1"	1-1/2"	1"	3/4"	166-1/2"	11-1/4"	4"	72"	126"	144"	84"	3080	92.2	2701
HR-36-190	3"	1/2"	3/4"	36"	1"	1-1/2"	1"	3/4"	190-1/2"	11-1/4"	4"	84"	150"	168"	96"	3460	106.4	3117
HR-36-214	3"	1/2"	3/4"	36"	1"	1-1/2"	1"	3/4"	214-1/2"	11-1/4"	4"	96"	174"	192"	108"	3840	120.6	3533
HR-42-193	3"	1/2"	3/4"	42"	1-1/4"	1-1/2"	1"	3/4"	193-1/2"	12-3/4"	4"	84"	150"	168"	97"	4210	145.6	4265
HR-42-217	3"	1/2"	3/4"	42"	1-1/4"	1-1/2"	1"	3/4"	217-1/2"	12-3/4"	4"	96"	174"	192"	109"	4655	164.8	4828
HR-48-196	4"	1/2"	3/4"	48"	1-1/4"	2"	1"	3/4"	196-1/2"	14-1/4"	5"	84"	150"	168"	98"	6010	193.2	5660
HR-48-220	4"	1/2"	3/4"	48"	1-1/4"	2"	1"	3/4"	220-1/2"	14-1/4"	5"	96"	174"	192"	110"	6635	218.4	6398
HR-54-200	5"	3/4"	3/4"	54"	1-1/2"	2-1/2"	1"	1"	200"	16"	6"	84"	150"	168"	100"	5755	246.4	7218
HR-54-224	5"	3/4"	3/4"	54"	1-1/2"	2-1/2"	1"	1"	224"	16"	6"	96"	174"	192"	112"	6340	278.2	8150
HR-60-203	6"	3/4"	3/4"	60"	1-1/2"	3"	1-1/4"	1"	203"	17-1/2"	6"	84"	150"	168"	102"	8125	307.0	8994
HR-60-227	6"	3/4"	3/4"	60"	1-1/2"	3"	1-1/4"	1"	227"	17-1/2"	6"	96"	174"	192"	114"	8935	346.2	10142
HR-60-251	6"	3/4"	3/4"	60"	1-1/2"	3"	1-1/4"	1"	251"	17-1/2"	6"	108"	198"	216"	126"	9740	385.4	11291
HR-72-233	8"	3/4"	1"	72"	2"	4"	1-1/4"	1"	233"	20-1/2"	8"	96"	174"	192"	117"	13200	509.4	14923
HR-72-257	8"	3/4"	1"	72"	2"	4"	1-1/4"	1"	257"	20-1/2"	8"	108"	198"	216"	129"	14365	566.0	16581
HR-72-281	8"	3/4"	1"	72"	2"	4"	1-1/4"	1"	281"	20-1/2"	8"	120"	222"	240"	141"	15530	622.6	18240
HR-84-239	10"	1"	1"	84"	2-1/2"	5"	1-1/4"	1"	239"	23-1/2"	10"	96"	174"	192"	120"	15920	705.8	20677
HR-84-263	10"	1"	1"	84"	2-1/2"	5"	1-1/4"	1"	263"	23-1/2"	10"	108"	198"	216"	132"	17275	782.8	22933
HR-84-287	10"	1"	1"	84"	2-1/2"	5"	1-1/4"	1"	287"	23-1/2"	10"	120"	222"	240"	144"	18630	859.8	25189
HR-96-244	10"	1"	1"	96"	3"	5"	1-1/4"	1"	244-1/2"	26-1/4"	10"	96"	174"	192"	122"	21770	938.8	27503
HR-96-268	10"	1"	1"	96"	3"	5"	1-1/4"	1"	268-1/2"	26-1/4"	10"	108"	198"	216"	135"	23580	1039.4	30450

Notes:

All dimensions and Nozzle sizes are given in inches.

Volume is given in total cubic feet of vessel

Capacity is based on R-717 with vessel 80% full at 96 deg. F

Please consult factory for certified drawings.

20" thru 48" vessels are designed for 300# DWP -20 +200 Design Temp. per ASME Section VIII, Div. 1

54" and larger vessels are designed for 250# DWP -20 +200 Design Temp. ASME Section VIII, Division 1

M&M Refrigeration, Inc. · 412 Railroad Avenue · PO Box 449 · Federalsburg, Maryland 21632 · Tel: 410.754.8005
Fax: 410.754.5813 · sales@mmrefrigeration.com · www.mmrefrigeration.com

STANDARD VERTICAL RECIRCULATOR BARE VESSEL

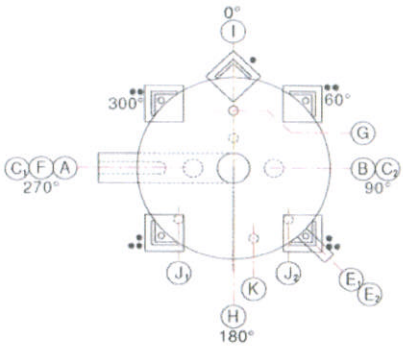

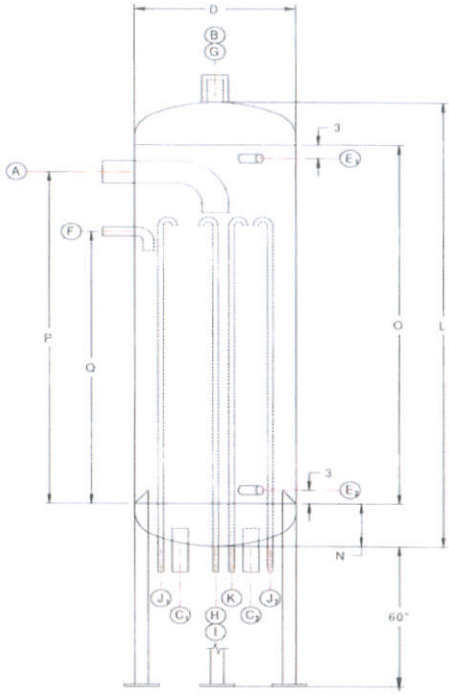

Nozzle	Description	Connection
A	Wet Return	Stub
B	Gas Outlet	Stub
C	Pump Suction	Stub
E	Float Column	Stub
F	Liquid Makeup	Stub
G	Relief	Coupling
H	Oil Drain	Stub
I	Oil Pot Vent	Coupling
J	Volute Vent	Stub
K	Liquid By-Pass	Stub
M	Pump Bleed	Stub

24" vessels have 3 legs (0 - 120 - 240)

30" and larger have 4 legs (45 - 135 - 225 - 315)

VERTICAL RECIRCULATOR DIMENSIONS

Model Numbe	A	B	C	D	E	F	G	H	I	J	K	L	N	O	P	Q	Surge Vol Cu. F	Wt. (Lb
VRC-24-112	5	4	2-1/2"	24"	1-1/2"	2"	3/4"	2"	3/4"	3/4"	1"	112-1/2"	8-1/4"	96"	90"	74"	14.99	1200
VRC-30-115	6	5	3"	30"	1-1/2"	2"	3/4"	2"	3/4"	3/4"	1-1/4"	115-1/2"	9-3/4"	96"	90"	74"	24.11	1475
VRC-36-118	6	6	4"	36"	1-1/2"	2"	3/4"	2"	3/4"	3/4"	1-1/4"	118-1/2"	11-1/4"	96"	90"	74"	35.08	2325
VRC-42-145	8	6	4"	42"	1-1/2"	2-1/2"	3/4"	2"	3/4"	3/4"	1-1/2"	145-1/2"	12-3/4"	120"	112"	94"	61.89	3200
VRC-48-148	8	8	5"	48"	1-1/2"	3"	3/4"	2"	3/4"	3/4"	1-1/2"	148-1/2"	14-1/4"	120"	112"	94"	81.33	4615
VRC-54-152	10	8	5"	54"	1-1/2"	3"	3/4"	2"	3/4"	3/4"	1-1/2"	152"	16"	120"	110"	91"	97.03	4420
VRC-60-155	10	8	5"	60	1-1/2"	3"	3/4"	2"	3/4"	3/4"	1-1/2"	155"	17-1/2"	120"	110"	91"	118.66	6140
VRC-72-161	12	10	6"	72"	1-1/2"	4"	1"	2"	3/4"	3/4"	1-1/2"	161"	20-1/2"	120"	108"	88"	161.53	9210
VRC-84-167	12	10	8"	84"	1-1/2"	4"	1"	2"	3/4"	3/4"	2"	167"	23-1/2"	120"	108"	88"	219.64	11175
VRC-96-172	14	12	8"	96"	1-1/2"	5"	1"	2"	3/4"	3/4"	2"	172-1/2"	26-1/4"	120"	106"	84"	266.47	15990

Notes:

All dimensions and Nozzle sizes are given in inches.

Please consult factory for certified drawings.

Surge volume is the amount of area between normal operating level and high level cutout.

24" thru 48" vessels are designed for 300# DWP -40 +200 Design Temp Per ASME Section VIII, Division 1

54" and larger vessels are designed for 250# DWP -40 +200 Design Temp Per ASME Section VIII, Division 1

VERTICAL RECIRCULATOR CAPACITIES

	OPERATING TEMPERATURE										
	TWO STAGE				SINGLE STAGE						
Model Numbe	-50	-40	-30	-20	-20	-10	0	+10	+20	+30	+40
VRC-24-112	51.9	64.3	77.8	92.1	80.1	92.7	105	120	134	147	149
VRC-30-115	82.1	102	123	145	126	147	166	189	213	234	251
VRC-36-118	117	146	176	209	181	210	237	271	305	334	359
VRC-42-145	161	200	242	287	249	288	326	372	418	459	492
VRC-48-148	212	263	318	376	327	379	428	490	549	603	647
VRC-54-152	270	334	405	478	416	481	544	623	698	767	822
VRC-60-155	334	414	501	593	516	597	674	771	865	950	1019
VRC-72-161	481	595	720	853	741	858	969	1109	1244	1366	1465
VRC-84-167	654	809	979	1159	1008	1167	1318	1508	1692	1858	1991
VRC-96-172	855	1056	1278	1513	1315	1522	1720	1968	2208	2425	2601

NOTES:

Capacities are given in tons of refrigeration. (R-717)

Two stage capacities are based on +35 deg. F liquid feed temperature.

Single stage capacities are based on +95 deg. F liquid feed temperature

M&M Refrigeration, Inc. · 412 Railroad Avenue · PO Box 449 · Federalsburg, Maryland 21632 · Tel: 410.754.8005
Fax: 410.754.5813 · sales@mmrefrigeration.com · www.mmrefrigeration.com

FORM 220.65-EG1 (703)

M TURBOMASTER

Multistage Centrifugal Compressors

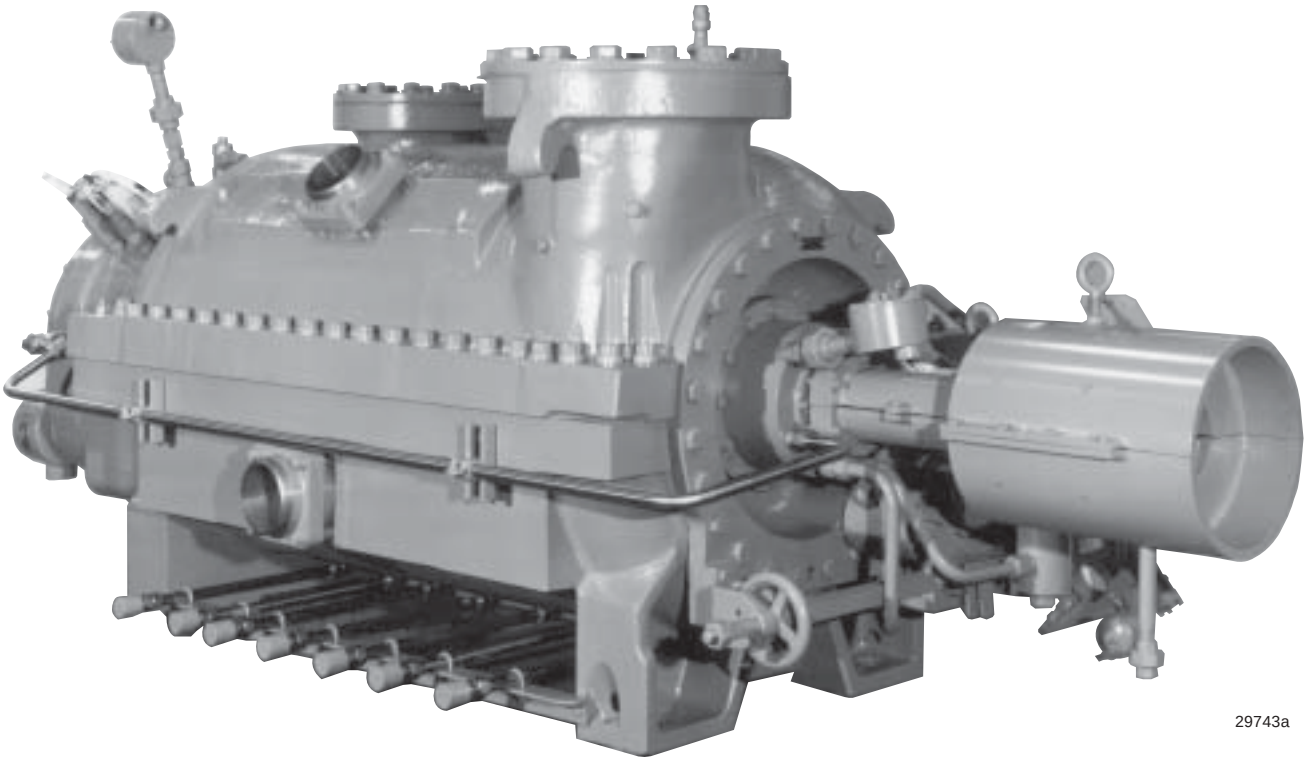

29743a

350 to 24,000 ACFM
600 to 40,000 m³/hr

TABLE OF CONTENTS

DESIGN PHILOSOPHY AND FEATURES 4
- General 4
- Performance Rating 5
- Design Philosophy 5
- Features and Advantages 5
- Other Features 5

MECHANICAL SPECIFICATIONS 7
- Casing 7
- Capacity Control 7
- Rotor 7
- Diffusers 7
- Coupling System / Drive Shaft 7

BEARINGS AND SEALS 8
- Radial Bearings 8
- Thrust Bearings 8
- Internal Seals 8
- Labyrinth Seals 8
- Shaft Seal 8

LUBRICATION SYSTEM 9
- Options/Accessories 9
- Major Component Material Specifications 10
- Drivers 11
- Compressor Units 11
- Tools 11
- Controls & Instrumentation 11
- Vibration Detection Equipment (Optional) 11
- Bearing Temperature Detectors (Optional) 11
- Corrosive Gas Protection Package (Optional) 11
- Gas Valves (Optional) 11
- Standard Factory Tests 12
- Optional Factory Tests 12

APPLICATION DATA 13

DIMENSIONS 14

APPROXIMATE WEIGHTS (LBS) 15

APPROXIMATE WEIGHTS (METRIC) 15

QUICK BUDGET COMPRESSOR SECTION 15

NOMENCLATURE

The model number denotes the following characteristics of the unit:

	M	3	38	B	1
Indicates Multistage					
Number of Stages (1-8)					
Nominal Casing I.D. in inches 25, 26, 38, 55					
Impeller O.D. (Diameter) Code (A or B)					
First Stage Impeller Width Code (1-8)					

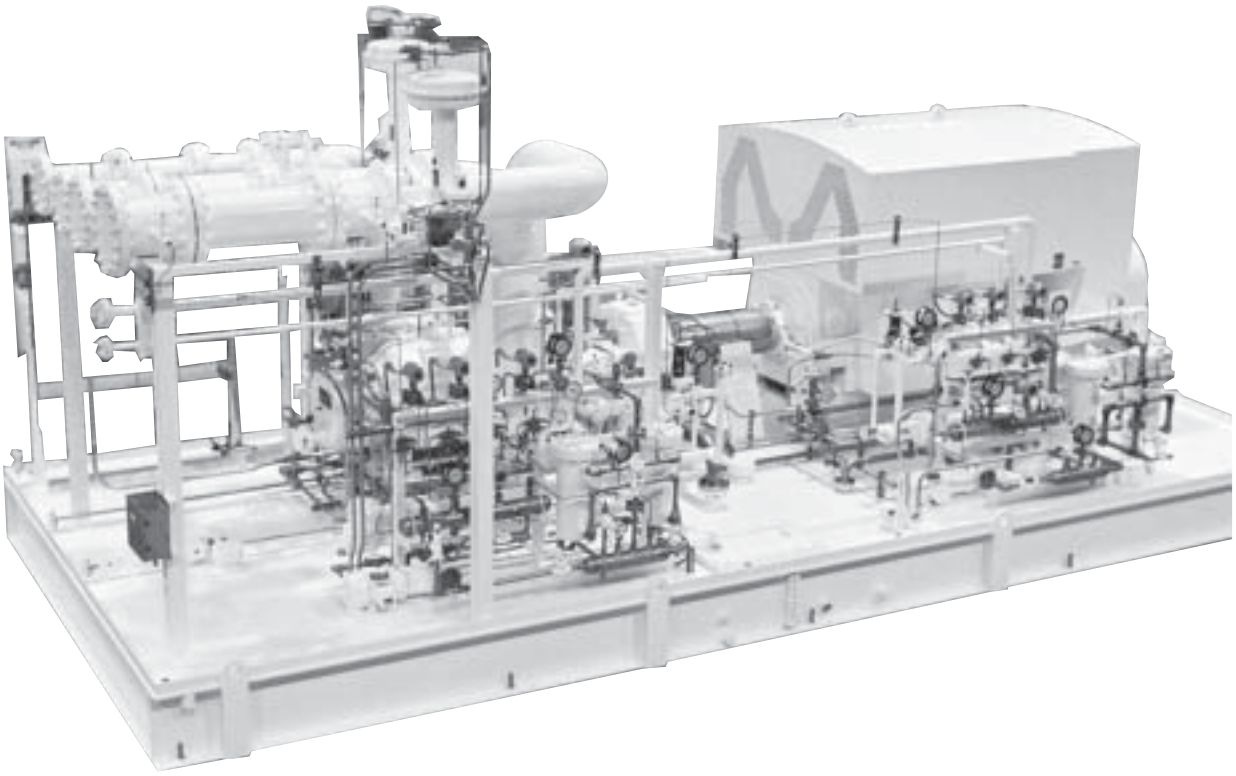

Design Philosophy and Features

General

The YORK M Turbomaster multistage centrifugal compressor is designed for heavy industrial use, and has proven itself in over 3,000 demanding gas compression and refrigeration applications worldwide in the chemical, petrochemical, hydrocarbon processing and refining industries. Volumetric capacities from 400 ACFM (680 m^3/hr) to 26,000 ACFM (44180 m3/hr) at full load design conditions are achieved utilizing 25", 26", 38" and 55" internal diameter casings. Compressor casing design pressures up to 600 psig are available. Up to 8 stages (impellers) of compression are available in a single, horizontally-split casing. Efficient partload control and design versatility makes this compressor an excellent choice to a wide market.

The YORK M Turbomaster is suitable for a variety of gases, including propylene, propane, mixed hydrocarbons, and the full range of halocarbon refrigerants. Applications include refrigeration, fuel gas compression, vapor recovery, LNG terminal unloading, and others.

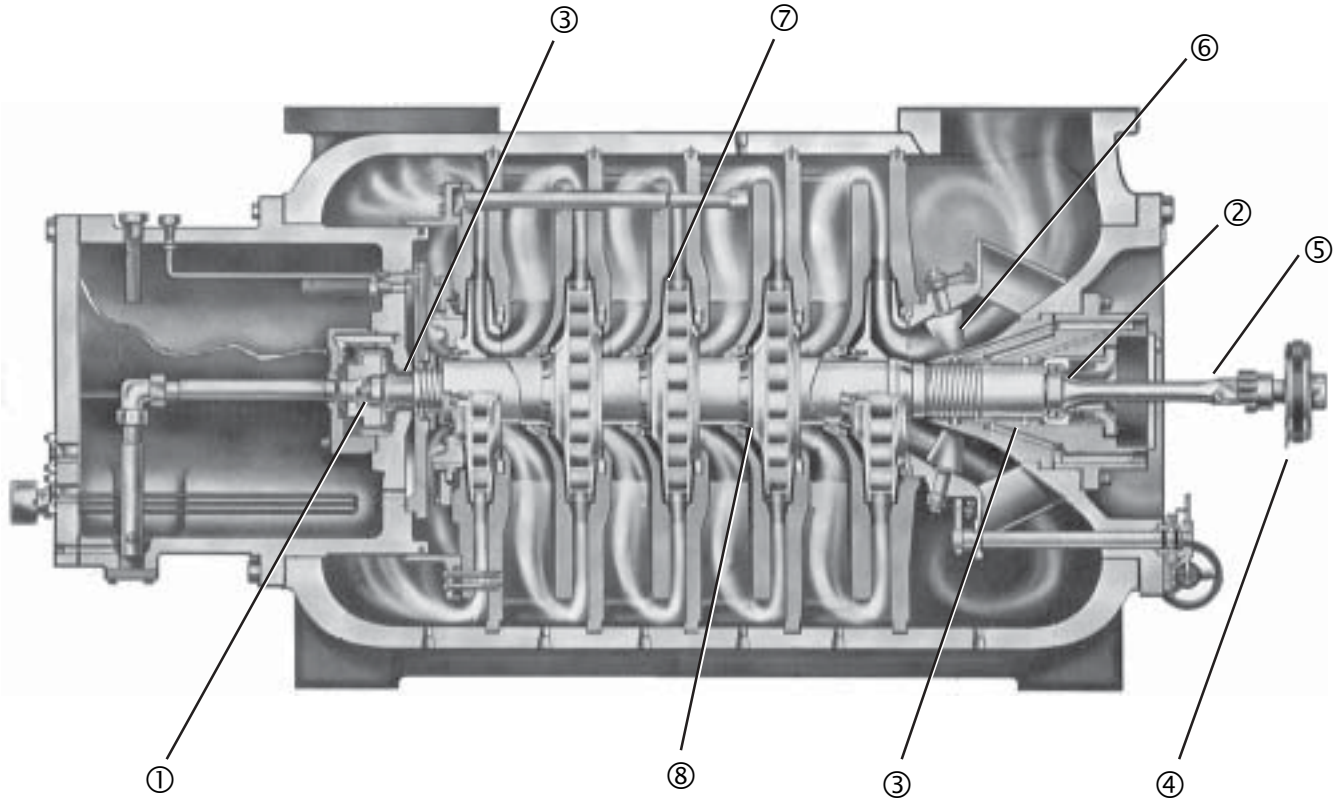

① **THRUST BEARINGS** – Tilting pad thrust bearing is steel backed babbit for added load carrying capacity and long life. The reverse thrust bearing is hydrodynamic film type. Micronic filters on the self-contained lube circuit assure proper filtered lubrication at all times.

② **OIL SEAL** – Small in diameter, simple in design due to the quill type drive shaft. This feature contributes to low rubbing speed for more dependable operation and longer seal life. The seal is spring loaded to assure complete sealing, even at shutdown.

③ **JOURNAL BEARINGS** – Precision bored, insert type aluminum alloy bearing. Extended bearing life is made possible due to the reduced rotor size and diameter. This reduces both bearing load and rubbing speeds.

④ **YORKFLEX COUPLING** – Simple in design, light in weight, designed to minimize the transmission of vibration during compressor operation, requires no lubrication and no maintenance for a long operating life.

⑤ **QUILL-TYPE DRIVE SHAFT** – Torsionally flexible, and designed for the transmission of large horsepowers.

⑥ **PRE-ROTATION VANES** – Aerofoiled, radially arranged in the inlet to the first stage impeller to regulate the volume of gas handled by the compressor. Furnished in manganese bronze, nodular iron or cast steel.

⑦ **IMPELLERS** – Precision machined, balanced, efficent, erosion and corrosion resistant. Impellers can be furnished fabricated of furnace brazed aluminum, furnace brazed anodized aluminum or electron-beam welded stainless steel.

⑧ **ROTOR** – Impeller attached to the shaft with individual collets and spring ring clamps to eliminate stress concentration and fatigue points. The impellers are engineered for minimum centrifugal stress and temperature rise. The shaft is designed with a minimum span between the journal bearings. Most 4 stage or fewer units do not operate above their first critical speed.

Every application and its respective operating conditions are carefully analyzed by factory engineers before each compressor is custom selected from standard components. This ensures that every customer receives an optimized compressor to meet their unique application. Interstage ports are available between each impeller for compound processes.

Performance Rating

Each compressor is optimized to achieve the customer's operating conditions and energy requirements.

YORK sales personnel, with support from the headquarters engineering staff, utilize proven mathematical models to optimize impeller selections and compressor operation. The selections are made from a vast array of standard compressor casings and impeller combinations, to achieve the desired performance.

When specified, compressor performance tests in accordance with ASME-PTC-10 (with specific exceptions) are conducted using the model gas of factory choice. The performance test data is then converted analytically to the actual process gas for performance confirmation.

Design Philosophy

The YORK compressor is designed as a "compressor system" in order to maximize benefits at an economical cost. This compressor system design concept considers the individual and combined effects of the coupling, seal/lube oil systems, bearings, shaft seal, capacity control and impeller mounting, in addition to traditional compressor design considerations.

Features and Advantages

1. Shaft Mounted Centrifugal Oil Pump
   - Provides coast-down lubrication even during power failure.
   - Eliminates requirements for run-down tank, steam turbine driven main oil pumps or DC motor driven auxiliary oil pump.
   - Not subject to abrupt failure.
   - Not subject to shaft seal, bearing, or coupling failure.

2. Time Proven Mechanical Shaft Seal
   - Only one shaft seal required, thereby reducing seal cost, leakage, and maintenance by half.
   - Minimum oil usage due to small diameter and low rubbing speed.
   - Outstanding safety record proven in over 3000 installations.
   - Shaft seal is capable of handling the full design pressure of the compressor.
   - Optional tandem shaft seal consists of a wet mechanical inboard seal and a dry running outboard seal with complete seal support system.

3. Tilt Pad Active Thrust Bearing
   - Tilting pad steel backed babbitt active thrust bearing provides added load carrying capability and long life.

4. Tapered Land Aluminum Sleeve Radial Bearings
   - Single piece guarantees concentricity
   - Improved bearing stability.

5. Yorkflex Flexible Disk Coupling
   - Non-lubricated.
   - No maintenance required.
   - Minimize vibration transmission.

6. Quill-Type Drive Shaft
   - Torsionally flexible.
   - High lateral critical speed minimizes rotor dynamics concerns.
   - Allows many compressors to operate below first critical speed.
   - All compressors operate below second lateral critical speed.

7. First Stage Variable Inlet Guide Vanes
   - Provides efficient capacity and head pressure control for fixed speed drive applications.
   - Automatic suction control valve seldom required.

8. Versatile Impeller and Diffuser Design
   - Impeller and diffuser design provide efficient operation on both light hydrocarbon gases like natural gas and propane, to heavy mole weight gases like halocarbon refrigerants.

9. No Rotor Keyways with Collet and Clamping Ring Design
   - Eliminates stress concentration and fatigue points, thereby permitting smaller rotor size and lower rubbing speeds which:
     - Increases bearing and shaft seal life
     - Reduces shaft seal leakage
     - Reduces shaft labyrinth seal leakage

Other Features:

Factory Packaged Oil System

- Seal and lube oil system is completely factory mounted and piped on compressor skid (air-cooled oil coolers, when used, are normally mounted off-skid).
- Factory flushing of lube oil system eliminates requirement of field flushing of factory piped oil system, saving startup time and expense.
- Eliminates field piping to off-skid lube oil module.
- Saves space.
- Pedestal mounting or mezzanine installation is not required for proper bearing oil drainage.

Heavy Duty Industrial Combined Lube and Seal Oil System

- Shaft mounted main oil pump with motor driven auxiliary oil pump.
- Dual 10-micron supply oil filters with 6-way transfer valve assembly.
- Customer choice of oil cooling method:
  - Single or dual water cooled assembly per ASME or TEMA with 6-way transfer valve assembly.
  - Single refrigerant cooled per ASME or TEMA eliminates failure due to corrosion and the requirement for oil cooler cleaning.
  - Air-cooled
- Stainless steel piping/tubing downstream of supply oil filters (stainless steel piping/tubing for complete oil system is optional).

Casing Material Choice

- Standard Cast Iron
- Optional Cast Steel (various alloys)
- Optional Nodular (Ductile) Iron

Single Source Responsibility for the Complete System

- York Sales and Applications Engineers are not only experienced in designing compressor systems but also designing and building complete systems to assure proper operation and provide single source responsibility.

Proven Experience of One of the World's Leading Suppliers of Refrigeration and Splitter Overhead Compressors

- Overhead Compressors
- Over 400 propane and propylene compressors
- Over 300 gas turbine driven compressors
- Over 30 splitter overhead compressors

Mechanical Specifications

Casing

The M Turbomaster casing is heavy duty in design, fabricated of close-grain high grade cast iron or optional nodular iron or cast steel and horizontally split for accessibility.

The top-half of the casing lifts off to allow access to the rotor assembly. The two halves are bolted together with high tensile steel cap screws. Integrally cast lifting lugs in the casing top-half facilitate lifting the entire compressor or just the top-half. Stage drains are furnished per the application requirement. Access to shaft seal and bearings does not require removal of the top-half of the casing or disturbing of the alignment.

Standard connections are top vertical flanges for suction and discharge to mate with ANSI 300 lb. raised-face flanges. Horizontal and diagonal interstage connections are available between each impeller with up to three connections per stage for heavy side loads.

Maximum DWP for cast iron casing compressors is 300 psig (2070 KPA) for all except the 55" size, which is 260 psig (1790 KPA). Maximum DWP for cast steel and modular iron compressor casings is 600 psig (4140 KPA) for all except the 55" size, which is 415 psig (3170 KPA).

TABLE A

COMPRESSOR SIZE	DWP - PSIG/KPA		
	CAST IRON	NODULAR IRON	CAST STEEL
M25	300 / 2,068.	600 / 4,136.8	600 / 4,136.
M26	300 / 2,068.	600 / 4,136.8	600 / 4,136.
M38	300 / 2,068.	600 / 4,136.8	600 / 4,136.
M55	260 / 1,792.	460 / 3,171.5	460 / 3,171.

Capacity Control

Standard pre-rotation vanes (PRVs) are manufactured from brass alloy, with nodular iron or cast steel optional. They are radially arranged in the inlet to the first stage impeller to regulate the volume of suction gas or capacity. PRV's are operated by a simple, reliable, positive annular ring with ball joints to individual vane arms. Actuation is pneumatic; an optional manual hand wheel can be provided.

Rotor

All impellers are shrouded, two-dimensional design, and incorporate contoured blades. The impellers are fabricated from brazed aluminum alloy. Anodized aluminum and welded stainless steel impellers are optional. Every impeller is ultrasonically and liquid penetrant examined to insure integrity of the brazing or welding and material. Each is statically and dynamically balanced. Each is overspeed tested to 120% of maximum design speed.

The compressor rotor shaft is manufactured from heat-treated alloy steel or optional forged steel. Impellers are interference fit and secured to the rotor with collets and spring clamp rings. The rotor assembly is then progressively statically and dynamically balanced as each pair of impellers are mounted.

To achieve the design axial thrust load, an aluminum or stainless steel balance piston is integrally machined or bolted onto the last stage impeller.

Optional spare rotors can be run at the factory during compressor mechanical testing. Spare rotors will be shipped in an oil- or nitrogen-filled container for long-term storage unless otherwise specified.

Titanium clamp rings are required in lieu of standard rings for corrosive gas or high temperature applications. Shaft sleeves are provided when required.

Diffusers

Vaned diffusers convert velocity head into pressure head. The vanes are manufactured of high-grade industrial steel.

Coupling System/Drive Shaft

The drive shaft is a quill-type, torsionally flexible shaft that minimizes overhung weight and allows the use of reduced shaft seal diameter. The smaller seal diameter minimizes oil leakage.

The YorkFlex coupling is a dry, disk type with zero maintenance and infinite life. It is concentrically assembled and lightweight. It is manufactured of high-grade steel disks and aluminum clamping rings, which can be vinyl coated for special corrosive environments.

Bearings and Seals

Radial Bearings

- The standard bearing is a tapered land aluminum sleeve bearing, designed to suppress oil whirl at all operating speeds.
- The bearings are of a one-piece design and precision bored to ensure correct fits and clearances.
- Radial bearings can be replaced without disturbing alignment or removing the top half of the casing.

Thrust Bearings

- The active or forward thrust bearing is a tilting pad steed backed babbit type.
- The reverse or inactive thrust is a hydrodynamic aluminum type or optional tilting pad.
- Thrust bearings can be replaced without disturbing alignment or removing the top casing half.

Internal Seals

Internal seals are manufactured from aluminum as standard, but are also available in cast iron or bronze. They consist of floating seal rings, springs and retainer plates. They are inboard of the journal bearings and are designed to minimize both gas leakage into the oil sump and prevent oil leakage into the compressor suction.

Buffer gas (typically the process gas being compressed) is injected between the two floating seal rings of the York A-4 gas seal. At each of the internal seals, part of the buffer gas flows outward and returns with the journal bearing oil to the compressor oil reservoir (sump). The buffer gas that flows inboard enters the suction or balance piston area where it is compressed. The factory-installed piping contains a 10-micron filter and is fabricated from threaded fittings and steel or optional stainless steel tubing.

Labyrinth Seals

Labyrinth seals are designed to separate the gas pressures at each stage. Close tolerances in the two-piece seal minimize gas leakage between each stage. They are precision made from aluminum (standard), bronze or cast iron to suit the application.

Shaft Seal

The shaft seal is designed to minimize leakage of process gas during compressor shutdown and operation. Only one shaft seal is used since the pressurized integral oil reservoir is at the discharge end. One shaft seal reduces seal leakage and maintenance in half while improving reliability. The standard mechanical seal is a single, spring-loaded stationary silicon carbide design. The rotating seal face is a different grade of silicon carbide, with elastomers selected for the application. During operation, the seal is lubricated to minimize wear.

The small quantity of oil leaking past the seal is collected in an atmospheric seal oil reservoir. Oil leaving the seal flows to the upper sump located higher than the shaft to provide an inventory of oil to lubricate the seal faces during idle periods. This permits sealing against full settle out pressure up to design pressure.

An optional tandem shaft seal consists of a wet mechanical inboard seal and a dry running outboard seal, with complete support system.

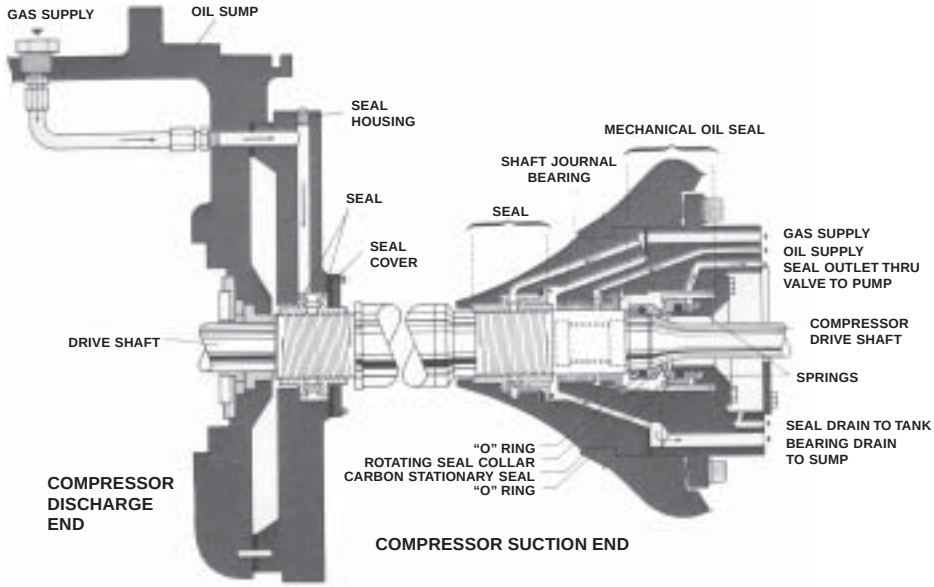

Lubrication System

Each compressor includes a force-fed positive lubrication system that supplies oil prior to startup, during operation and coastdown.

Oil pressure prior to and during startup and shutdown is furnished by the electrically operated auxiliary oil pump. This pump automatically shuts off when the main pump establishes minimum design operating pressure. The shaft-mounted centrifugal main oil pump provides oil pressure during compressor operation and coastdown.

Dual 10-micron nominal oil filters with 6-way transfer valve assembly permits easy filter replacement during operation.

Water-, air- or refrigerant-cooled oil cooler(s) maintain oil at the proper operating temperature. The compressor oil temperature is regulated by an automatic, 3-way bypass valve on water- and air-cooled applications. Optional refrigerant cooled oil coolers eliminate cleaning and corrosion problems.

Industrial grade temperature and pressure indicators with isolation valves are furnished at appropriate locations.

An integral oil sump provides an adequate quantity of oil for continuous operation. A level gauge is mounted flush in the oil reservoir end cover plate.

Oil flow sight glasses are provided in the suction journal bearing (inboard) return and thrust bearing discharge lines.

Transmitters, RTD's or switches are furnished as applicable for compressor safety and operating controls.

Oil heaters are provided with thermostatic control to maintain a constant oil temperature in the oil reservoir during shutdown, thus minimizing process gas accumulation in the oil.

The lubrication system is self-contained, internally vented, factory assembled, and piped to the compressor unless otherwise specified. The standard lubrication system is fabricated from steel and/or stainless steel pipe and tubing. The system is factory flushed to ensure cleanliness. A YORK mineral or synthetic oil suitable for the application is supplied.

Lubrication System Options/Accessories

While the basic design of the lubrication system has been proven in thousands of applications, numerous options are available, including:

- Lubrication controls, supplied as a complete package mounted on the compressor base.
- Special oil coolers to suit unusual coolant temperatures, increased fouling factors, alternate tube material and/or higher fluid side DWP and suitable for use with alternate cooling mediums.
- Optional dual oil cooler and standard dual oil filter arrangements including 6-way transfer valve assemblies.
- Stainless pipe/tubing upstream of oil filters or complete welded pipe.

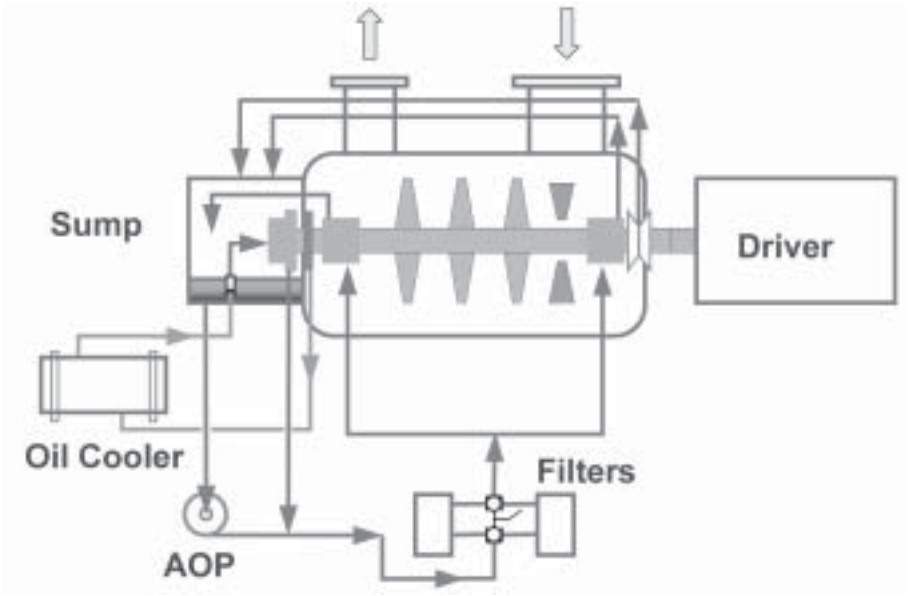

Major Component Material Specification

MAJOR COMPONENT MATERIAL SPECIFICATIONS

COMPONENT	MATERIAL
CASING	- ASTM A-278 Class 40 Gray Cast Iron - ASTM A-536 Grade 60-40-18 Nodular Iron - ASTM A-216 Gr WCB - ASTM A-352 Grade LCB, LC1, LC2, LC3 or LC4
PRE-ROTATION VANES	- Manganese Bronze, CA86500 - ASTM A-536 Grade 60-40-18 Nodular Iron - Cast steel
MAIN ROTOR SHAFT	- ASTM A-322 Grade 4340 or 4150 steel, hot rolled, heat treated, machine straightened and stress relieved
CLAMP RINGS	- ASTM A-322 Grade 4340 or 4150 steel, hot rolled, heat treated, machine straightened and stress relieved - Titanium 6A1-6V-2Sn, MIL-T-9046J
IMPELLERS	- 6061T6 Brazed Aluminum alloy - AISI Type 403 turbine quality or 410 aircraft quality electron beam welded stainless steel
BEARINGS	- 850T5 Aluminum Alloy - ASTM B-584 Bearing Bronze CA93200 - Flexure pivot - Tilting pad (thrust)
LABYRINTHS & SEAL RINGS	- 850T5 Aluminum Alloy - SAE64 Phosphor bronze. - Cast iron
OIL SEALS	- 850T5 Aluminum Alloy - SAE64 Phosphor bronze. - Cast iron
DIFFUSERS	- ASTM A-278 Class 35 Gray Cast Iron
DRIVE SHAFT	- ASTM A-322 Grade 4340 or 4150 steel, hot rolled, heat treated, machine straightened and stress relieved
COUPLING	- Disks - ASTM A-322 Grade 4340 or 4150 steel, hot rolled, heat treated, machine straightened and stress relieved - Clamping Rings - ASTM B-209 Alloy 7075 T651

Standard Material is Listed First.

Drivers

Standard drivers include induction and synchronous motors, steam turbines, gas turbines, diesel and gas engines. External speed increasers/decreasers may be required and are selected for each application.

Controls and switch gear should be selected to suit each application, and considerations must be made for critical speed avoidance and reduced in-rush requirements.

Compressor Units

Compressor units can be completely factory assembled and aligned on a rigid structural steel base. Transit leveling points are machined into the base, parallel with the component mounting surfaces to assure that field installation is consistent with factory assembly.

Tools

Special tools that are required for compressor maintenance are shipped with the compressor. Tool cabinets are optional.

Controls & Instrumentation

In addition to the required safety and operating controls and indicators, optional instruments such as vibration and movement probes and bearing RTDs can provide monitoring in addition to alarm and shutdown. Prealarms are available before all shutdowns. York standard control panels or custom designed PLC panels can be provided to control the compressor unit and York furnished system. Logic can be incorporated to provide recycle gas control for anti-surge / flow control.

Vibration Detection Equipment (Optional)

Proximity vibration monitoring equipment is a common option for the compressor and its drivers. The optional Bently Nevada Ram 3300 series probes are factory mounted in the compressor and adjusted to avoid the need for field adjustment of gap voltage. Two shaft mounted radial vibration probes at each journal bearing, one or two axial movement probes, and one keyphasor are available.

Bearing Temperature Detectors (Optional)

One or two RTD's contacting each radial bearing is a common option. An RTD can also be furnished in the thrust bearing oil outlet to monitor bearing condition.

Corrosive Gas Protection Package (Optional)

Includes aluminum jet pump assembly, titanium clamp rings, and redrawn bolts – for H2S, CO2, NH3, etc. Used on natural gas compressors unless in clean fuel gas or LNG compression.

Gas Valves (Optional)

YORK can furnish process gas valves including a tight closing discharge check valve, side load (or economizer) back pressure control valve(s), isolation valves for suction, discharge and interstage, recycle valve(s) and suction pressure control valve, if required. These valves can be factory installed in piping ending at the skid edge or shipped loose.

Testing

Standard Factory Tests

M Turbomaster Compressors are inspected and checked by the YORK Quality Control and Inspection group to insure compliance with YORK Engineering requirements, as well as the applicable Standards and Codes. This assures the quality and performance expected of heavy duty industrial type equipment. The following listing outlines the primary testing and related procedures used by YORK.

Compressors are tested as follows:

1. Hydrostatic (water) strength test of machined compressor casing (before internal assembly) at 1.5 x DWP, followed by cleaning and drying procedures.

2. Nitrogen/air mixture leak test of compressor casing (before internal assembly) at DWP.

3. Ultrasonic examination of all impellers.

4. Impellers are dye-penetrant checked for flaws. Overspeed test of individual impellers at 1080 FPS (1.2 x max. allowable continuous operating speed). All impellers are then inspected for growth.

5. Impellers and rotor are individually statically and dynamically balanced.

6. The rotor is then assembled and balanced in steps, with the final complete rotor assembly balance checked.

7. Mechanical run-in test on air of assembled compressor for one-half hour at design speed for motor drive units or turbine trip speed. 4-hour and 2-hour run-in tests and vibration measurement with job probes are optional.

8. Removal and inspection of shaft seal, journal bearings and thrust bearings, following air run-in test. Re-assembly of bearings and seal, and brief re-run of compressor to prove mechanical integrity of re-assembly.

9. Nitrogen/air mixture leak test of completely assembled compressor at the DWP.

10. After final compressor unit packaging, the complete compressor lubrication system assembly is pneumatically leak tested and evacuated to 3 mm Hg absolute, followed by two-hour holding period. Pressure rise may not exceed 2.6 mm Hg during this period.

11. Compressor is then charged with dry nitrogen to a positive pressure.

Optional Factory Tests

API-617 4-hour run-in with job probes.

Compressor performance test.

Casing magnetic particle or liquid penetrant examination.

Impeller (stainless steel) magnetic particle examination.

Application Data

Any system design utilizing the YORK M Turbomaster compressor must provide consideration of the following:

1. A check valve is necessary in the horizontal run of each compressor discharge line, as close to the compressor as possible (within 25 feet of compressor discharge flange).

2. Machinery backspin, caused by equalizing pressures, must be minimized by using automatic valves as necessary to close suction and side streams on shutdown. The automatic pre-rotation vanes (PRV), provided as standard, can be used for the suction. If automatic PRVs are not used, a suction damper is required.

3. All piping and vessels connected to the compressor must be arranged and designed to eliminate liquid accumulation and subsequent entrance into the compressor. Do not trap any piping to or from the compressor. This requires proper design of vapor liquid separation in vessels and heat exchangers, and may require the addition of suction traps or accumulators.

4. Automatic throttling valves may be necessary on all streams entering the compressor (within 10 feet of compressor flange) in order to avoid driver stall during acceleration by an electric motor or a low torque driver. The automatic PRVs may be used to reduce starting torque by throttling the first stage suction.

5. On variable speed drives, the compressor should not be permitted to idle for extended periods of time. If it is necessary for the compressor to idle for more than several minutes, an automatic recycle valve may be required to prevent overheating, depending on compressor idle speed. The valve should be mounted between the compressor discharge and the check valve. The recycle gas will have to be cooled or quenched to prevent compressor overheating. If quench is used, refer to the above (Item 3) regarding elimination of liquid.

6. Automatic suction, side stream and/or discharge throttling valves may be required to limit flow during startup, pulldown or upset conditions to avoid choke[1]. These conditions usually occur in pipeline or parallel compressor systems or when low ambient temperatures suppress the condensing temperature on a refrigeration unit. Sustained compressor operation with a head of less than roughly 60% of design (MU less than 0.3 at any stage) may result in choked flow and consequential damage. The standard automatic PRVs may be used for the suction.

7. Automatic controls to limit side load inlet pressures may be required when the side load flow is excessively high due to off-design condition, which may occur during startup. If the side load flows increase in proportion to the 1st section inlet flow, the interstage pressures may increase, resulting in surge of the 1st section. Pressure control valves sensing down-stream pressure can be used to avoid this scenario.

8. All compressors operating in parallel, or required to start up against the head of an operating compressor, must be provided with individual automatic recycle valves and gas cooling as described above. The recycle gas should exit the discharge line between the compressor and its discharge check valve.

9. On variable speed drives, the compressor speed must not dwell within the range of +/-5% of a compressor critical speed. Automatic controls are necessary to ramp quickly through critical speeds, and thus avoid possible damage.

10. Because of the part load characteristics of centrifugal compressors, recycle valve(s) will be required as necessary to satisfy the minimum flow requirements of each compressor section, or surging will occur. Large, independent or rapidly changing side loads usually require individual recycle valves and cooling.

11. Some applications with low vapor pressure gases may require the compressor to be vented during standby to prevent the accumulation of condensed liquid in the oil sump and casing.

12. Whenever accumulation of condensed liquid occurs in the casing during shutdown, stage drain piping must facilitate removal of liquids prior to restart.

[1] The actual head at which the compressor will exhibit a choke characteristic may be anywhere from approximately 40% to 80% of the adiabatic or polytropic head at the design condition. Consult York Engineering for an accurate prediction regarding choke.

Dimensions

APPROXIMATE DIMENSIONS, INCHES (MM)

Case Size	A	B	D 2-Stage	d Ea. Add Stage	E	G	H	K	L
25	18 (457)	33-1/2(851)	29 (737)	4-1/2 (114)	14 (356)	15 (381)	7 (178)	1-3/16 (30)	9 (22.9)
26	18 (457)	33-1/2 (851)	29 (737)	5 (127)	14 (356)	15 (381)	7 (178)	1-3/16 (30)	9 (22.9)
38	24 (609)	46-3/4 (1187)	44 (1118)	8 (203)	18-5/8 (473)	21-1/2 (546)	10-1/4 (260)	1-3/16 (30)	13 (330)
55	34 (864)	65-1/2 (1164)	64 (1626)	10 (254)	20 (508)	32 (813)	15-1/2 (394)	1-3/16 (30)	19-1/2 (495)

APPROXIMATE DIMENSIONS, INCHES (MM) (continued)

Case Size	M	N	O	P	Connections Suct.	Connections Disch.	R	S 2-Stage	T
25	6 (152)	6 (152)	14-1/2 (368)	4 (102)	10 (254)	6 (152)	9-1/2 (241)	25 (635)	39-5/8 (1006)
26	6 (152)	6 (152)	14-1/2 (368)	4 (102)	10 (254)	6 (152)	9-1/2 (241)	25 (635)	39-5/8 (1006)
38	9 (229)	10 (254)	22-3/4 (578)	6 (152)	14 (256)	10 (254)	16-3/4 (426)	37 (939)	54-1/8 (1375)
55	11-3/4 (298)	11-3/4 (375)	30-1/2 (775)	6 (152)	20 (508)	14 (356)	18-1/2 (469)	55-1/2 (1409)	63-3/8 (1609)

COUPLINGS DIMENSIONS, INCHES (MM)

	COMPRESSOR SIZE												
	25			26			38			55			
Coupling	**1**	**1-1/4**	**1-1/2**	**1-1/4**	**1-1/2**	**1-7/8**	**1-7/8**	**2-1/2**	**3**	**1-7/8**	**2-1/2**	**3**	**3-3/4**
U	(282)	(283)	(392)	(335)	(395)	(570)	(503)	(661)	(942)	(603)	(203)	(781)	(1085)
A-1 Seal	11-1/4	11-5/32	15-7/16	13-3/16	15-9/16	22-31/64	19-13/16	26-1/32	37-3/32	23-3/4	23-3/4	30-3/4	42-3/4
U	(319)	(300)	(415)	(389)	(449)	(606)	(579)	(743)	(998)	(514)	(696)	(871)	(1171)
A-4 Seal	12-9/16	11-13/16	16-11/32	15-11/32	17-11/16	23-7/8	22-13/16	29-9/32	39-5/16	20-1/4	27-7/16	34-5/16	46-1/8
	(55)	(60)	(79)	(60)	(79)	(91)	(91)	(114)	(138)	(91)	(114)	(138)	(172)
V	2-3/16	2-3/8	3-1/8	2-3/8	3-1/8	3-5/8	3-5/8	4-1/2	5-15/32	3-5/8	4-1/2	5-15/32	6-13/16
	(87)	(98)	(123)	(98)	(123)	(149)	(149)	(187)	(230)	(149)	(187)	(230)	(284)
W	3-7/16	3-7/8	4-7/8	3-7/8	4-7/8	5-7/8	5-7/8	7-3/8	9-3/32	5-7/8	7-3/8	9-3/32	11-7/32

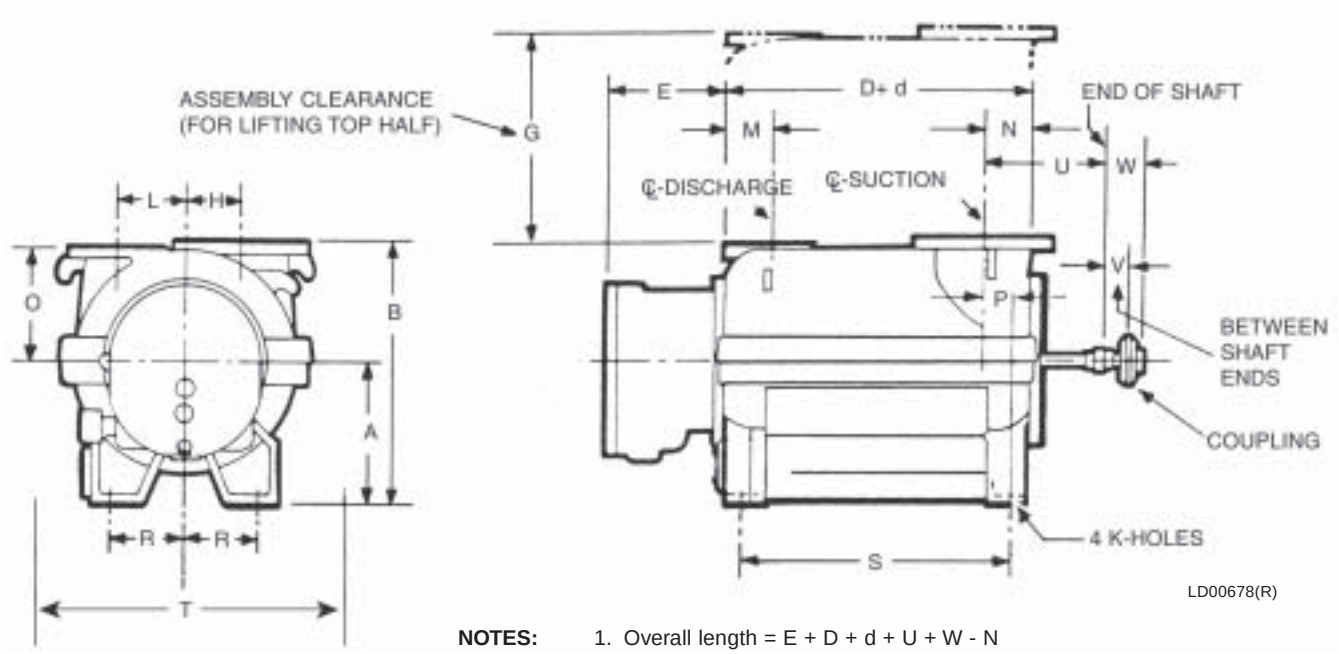

NOTES:
1. Overall length = E + D + d + U + W - N
2. Overall dimensions do not include piping.
3. Refer to job drawings for certified dimensions.

Quick Compressor Selection

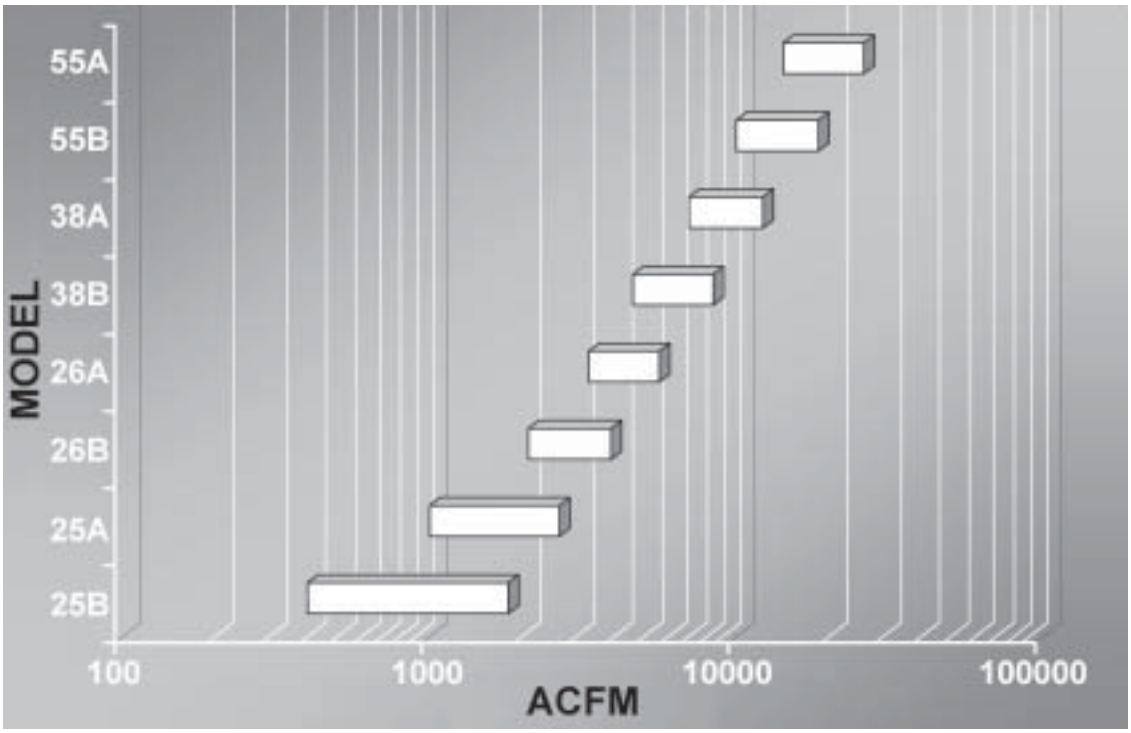

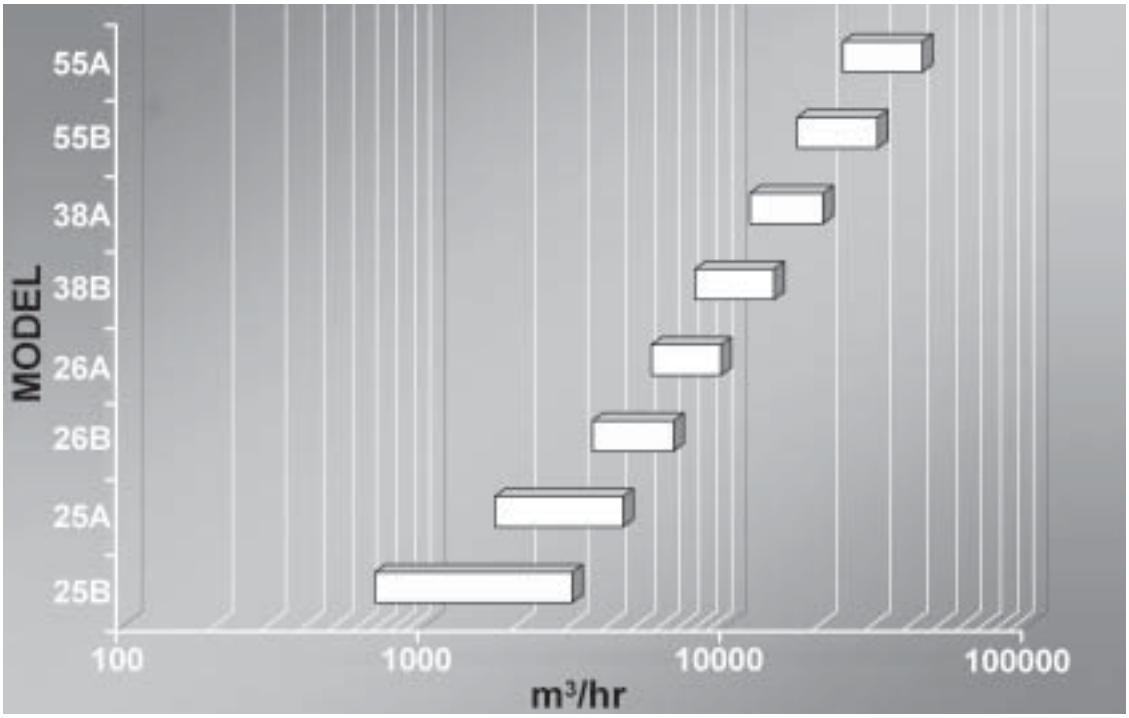

P.O. Box 1592, York, Pennsylvania USA 17405-1592
Copyright © by York International Corporation 1997
Form 220.65-EG1 (703)
Supersedes: Nothing
Subject to change without notice. Printed in USA
ALL RIGHTS RESERVED

AERO SYSTEMS ENGINEERING

PROJECT: P06151 – NASA GRC – Replacement of Refrigeration System for IRT, Bldg 9

CALCULATION PACKAGE: 5

TITLE: IRT HX Boiling

RESPONSIBLE ENGINEER Marksberry

APPROVED _____ DATE _____

REVISION	DATE	DESCRIPTION

	Submittal:	_____	Date:	_____
	Submittal:	_____	Date:	_____
	Submittal:	_____	Date:	_____
_____ Preliminary	Submittal:	_____	Date:	_____
_____ Final	Submittal:	_____	Date:	_____

ASE **Aero Systems Engineering, Inc**
358 East Fillmore Avenue
St. Paul, Minnesota 55107-1289 U.S.A.
Web: www.aerosysengr.com
Phone: +1-651-227-7515
Fax: +1-651-227-0519
E-mail: ASE@AeroSysEngr.com

In prior work, it had been assumed that the R134a boiling in the heat exchanger was properly designed for and that the heat exchanger performance would be so constrained by air side performance, that a change in refrigerant would not materially affect tunnel air cooling. In the current work, the above assumptions were tested by computing nominal boiling heat transfer within the existing heat exchanger for both R134a and R507A.

The 1997 ASHRAE Fundamentals was used as the definitive reference; specifically Chapter 4 “Two-Phase Flow”. Equation 2 from Table 2 was applied. Per that equation it was found that the refrigerant boiling heat transfer coefficient and thermal conductance was very high for both R134 and R507 as anticipated.

There are concerns, however, with both R507 and R134. Per ASHRAE at low mass velocity, less than 150,000 Btu/hr-ft2-ft2, the wavy flow boiling regime should be anticipated. The nominal liquid phase mass velocity is about 39000 for R134 and 53000 for R507. This is well within the wavy flow regime. In wavy flow, the fluid field separates in liquid only at the bottom of the tube and vapor only at the top of the tube. At higher quality, the flow pattern will transition to annular flow. The wavy flow regime will significantly reduce anticipated heat transfer rates since a significant portion of the tube perimeter will only have dry gas heat transfer rates and compared to high boiling type heat transfer coefficients.

From the perspective of wavy flow, the IRT heat exchanger was improperly designed. Once reason for this happening is that the R134a has a very low saturation pressure and vapor density. Thus, suction side pressure loss was probably a significant concern. For R507, serious consideration should be given to rearranging the flow route through the heat exchanger to try to get out of the wavy flow regime. A significant cost would incur. For example, instead of having 3/3/2 tube rows per pass for 2 passes, it might be desirable to have folded 3/3/2 arrangement. This doubles the mass velocity and will increases refrigerant pressure loss in the heat exchanger by about a factor of 8.

Note that the ASHRAE reference only had only equations specialized for R-12 and R-22 (or similar refrigerants) and did not have more general equations that include fundamental parameters such as surface tension and wall to fluid temperature difference. If additional work is desired, it will prudent to search for specialized equations for R134 and R507 or else apply a more general purpose boiling equation.

		R134A																		
			Heat Exchanger Flow								Flash Cooler Liquid Flash Flow				Economizer Flow					
Tons of Refrigeration (TR)	BTUh	BTU/lb	lbs/hr	lbs/min	Liquid Density (lbs / ft2)	Liquid Flow Rate (GPM)	Recirc Rate	Total HX Flow (lbs/min)	Total HX Flow (GPM)	Heat Capacity (btu/lb f)	Delta T	Btu/Lb	Load	Flow (lbs/min)	Delta T	Btu/Lb	Load	Flow (lb/min)	Suction Flow (lb/min)	Discharge Flow (lb/min)
600	7,200,000	92.8	77,586	1293.1	75.1	128.7	1.4	1810	180.2	0.341	55	74.045	1,455,129	328	85	63.815	2,818,448	736	1,621	2357
1200	14,400,000	92.8	155,172	2586.2	75.1	257.5	1.4	3621	360.4	0.341	55	74.045	2,910,259	655	85	63.815	5,636,896	1,472	3,241	4713
1600	19,200,000	92.8	206,897	3448.3	75.1	343.3	1.4	4828	480.6	0.341	55	74.045	3,880,345	873	85	63.815	7,515,862	1,963	4,322	6285
2100	25,200,000	92.8	271,552	4525.9	75.1	450.5	1.4	6336	630.8	0.341	55	74.045	5,092,953	1,146	85	63.815	9,864,569	2,576	5,672	8249

		R507																		
			Heat Exchanger Flow								Flash Cooler Liquid Flash Flow				Economizer Flow					
Tons of Refrigeration (TR)	BTUh	BTU/lb	lbs/hr	lbs/min	Liquid Density (lbs / ft2)	Liquid Flow Rate (GPM)	Recirc Rate	Total HX Flow (lbs/min)	Total HX Flow (GPM)	Heat Capacity (btu/lb f)	Delta T	Btu/Lb	Load	Flow (lbs/min)	Delta T	Btu/Lb	Load	Flow (lb/min)	Suction Flow (lb/min)	Discharge Flow (lb/min)
600	7,200,000	84.4	85,308	1421.8	65.4	162.7	1.4	1991	227.8	0.369	55	64.105	1,731,327	450	85	53.035	3,522,783	1,107	1,872	2979
1200	14,400,000	84.4	170,616	2843.6	65.4	325.4	1.4	3981	455.6	0.369	55	64.105	3,462,654	900	85	53.035	7,045,566	2,214	3,744	5958
1600	19,200,000	84.4	227,488	3791.5	65.4	433.9	1.4	5308	607.5	0.369	55	64.105	4,616,872	1,200	85	53.035	9,394,088	2,952	4,992	7944
2100	25,200,000	84.4	298,578	4976.3	65.4	569.5	1.4	6967	797.3	0.369	55	64.105	6,059,645	1,575	85	53.035	12,329,740	3,875	6,552	10426

Current System (No economizer)

		R134A																		
			Heat Exchanger Flow								Flash Cooler Liquid Flash Flow									
Tons of Refrigeration (TR)	BTUh	BTU/lb	lbs/hr	lbs/min	Liquid Density (lbs / ft2)	Liquid Flow Rate (GPM)	Recirc Rate	Total HX Flow (lbs/min)	Total HX Flow (GPM)	Heat Capacity (btu/lb f)	Delta T	Btu/Lb	Load	Flow (lbs/min)					Suction Flow (lb/min)	Discharge Flow (lb/min)
600	7,200,000	92.8	77,586	1293.1	75.1	128.7	1.4	1810	180.2	0.341	125	50.175	3,307,112	1,099					2,392	2392
1200	14,400,000	92.8	155,172	2586.2	75.1	257.5	1.4	3621	360.4	0.341	125	50.175	6,614,224	2,197					4,783	4783
1600	19,200,000	92.8	206,897	3448.3	75.1	343.3	1.4	4828	480.6	0.341	125	50.175	8,818,966	2,929					6,378	6378
2100	25,200,000	92.8	271,552	4525.9	75.1	450.5	1.4	6336	630.8	0.341	125	50.175	11,574,892	3,845					8,371	8371

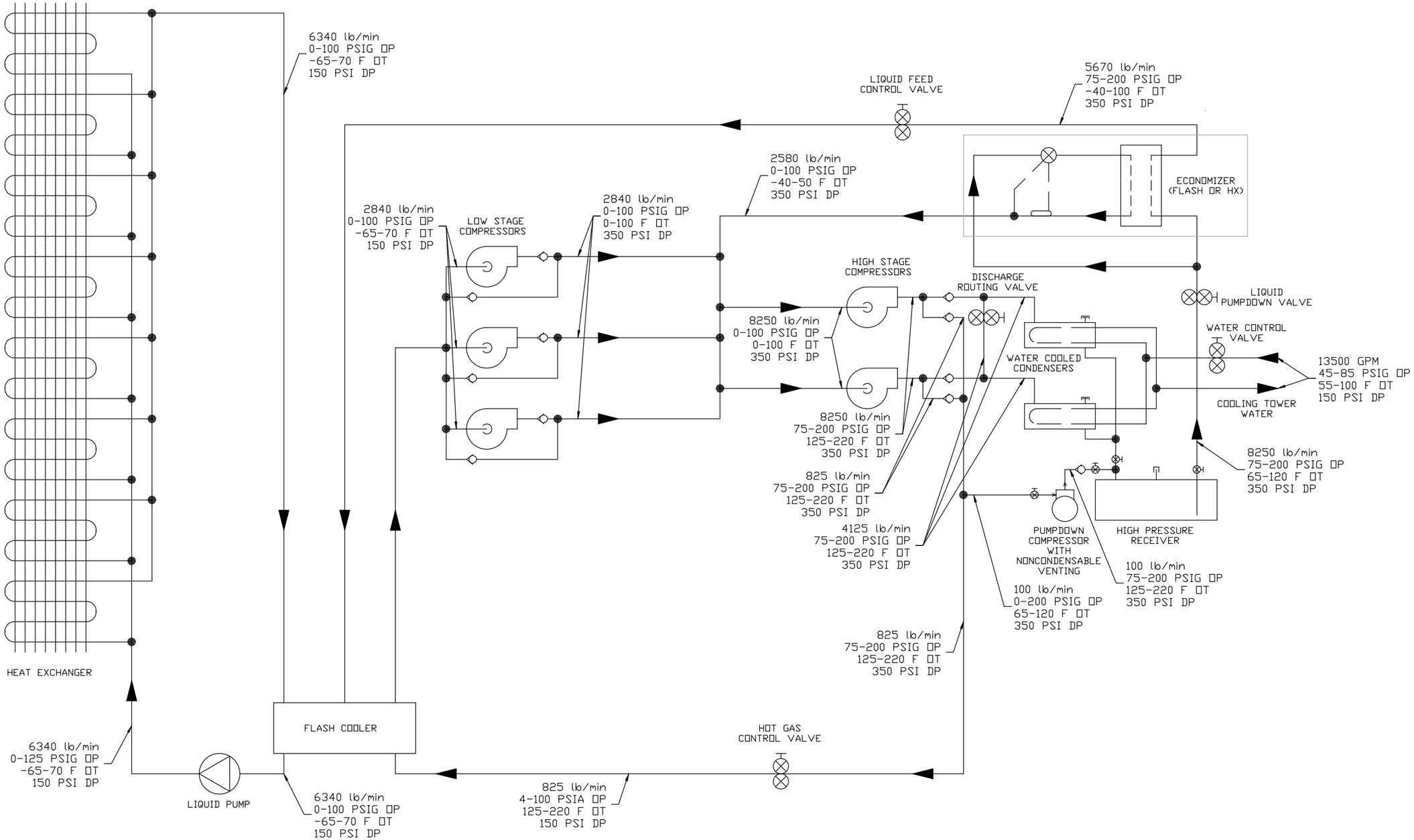

SieTech
Systems Integration and Engineering Technologies

CENTRIFUGAL PLANT PROCESS - (Option 1)

ENGINEER	DRAWN BY	DRAWING NO.
SPR		IRT-1
SCALE	DATE 02/19/07	

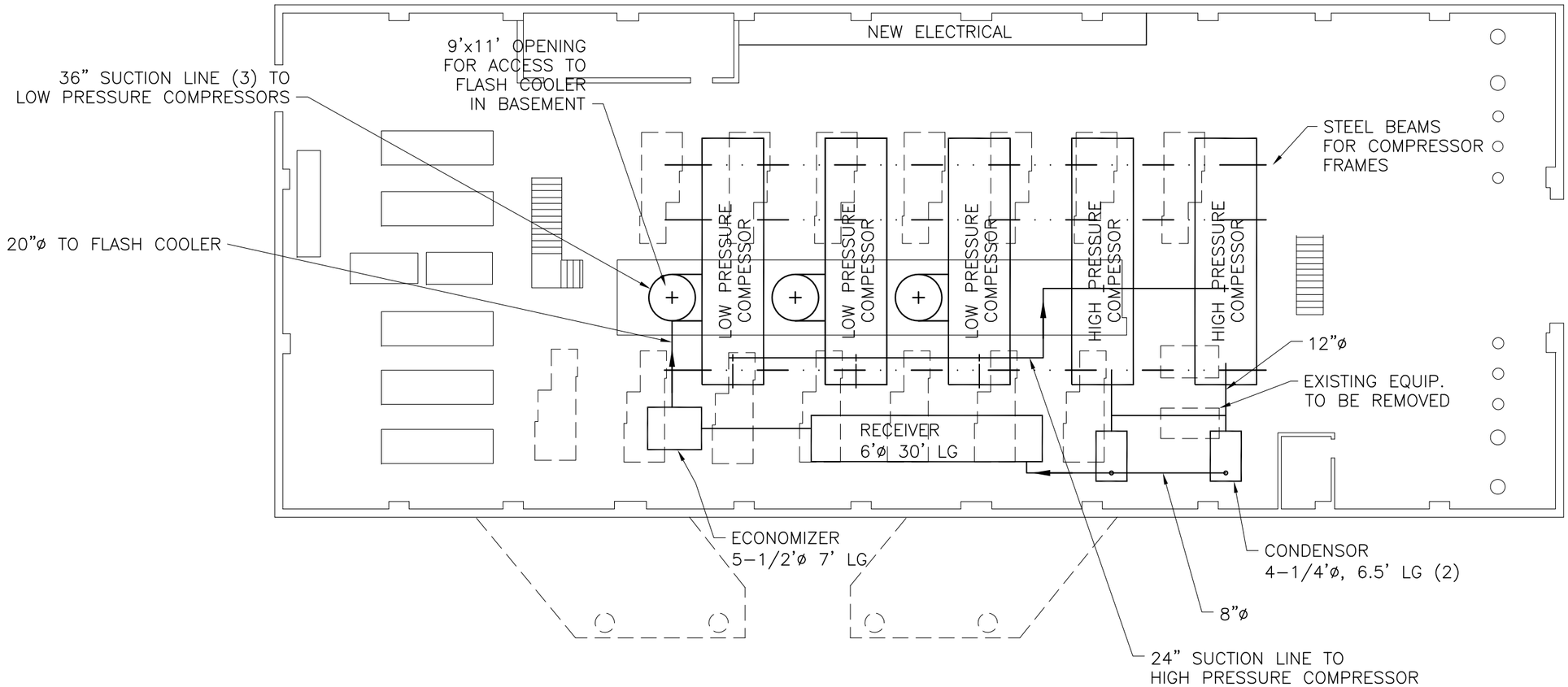

FLOOR PLAN OPTION 1

1/16" = 1'-0"

Revision Date

ASE AERO SYSTEMS ENGINEERING

NASA GLENN RESEARCH CENTER
REPLACEMENT OF REFRIGERATION
SYTEM FOR THE IRT

Collaborative Design, Ltd.
Architects
2727 Tuller Parkway Suite 200
Dublin, Ohio 43017
Tel 614.798.5110 Fax 614.798.5105

©2007, Collaborative Design, Ltd.

Project Number
06074

Date
03-9-07

Scale
AS NOTED

File Name
A1-Lvlrg 102901 23842

Drawing Description

OPTION 1
FLOOR
PLAN

A1

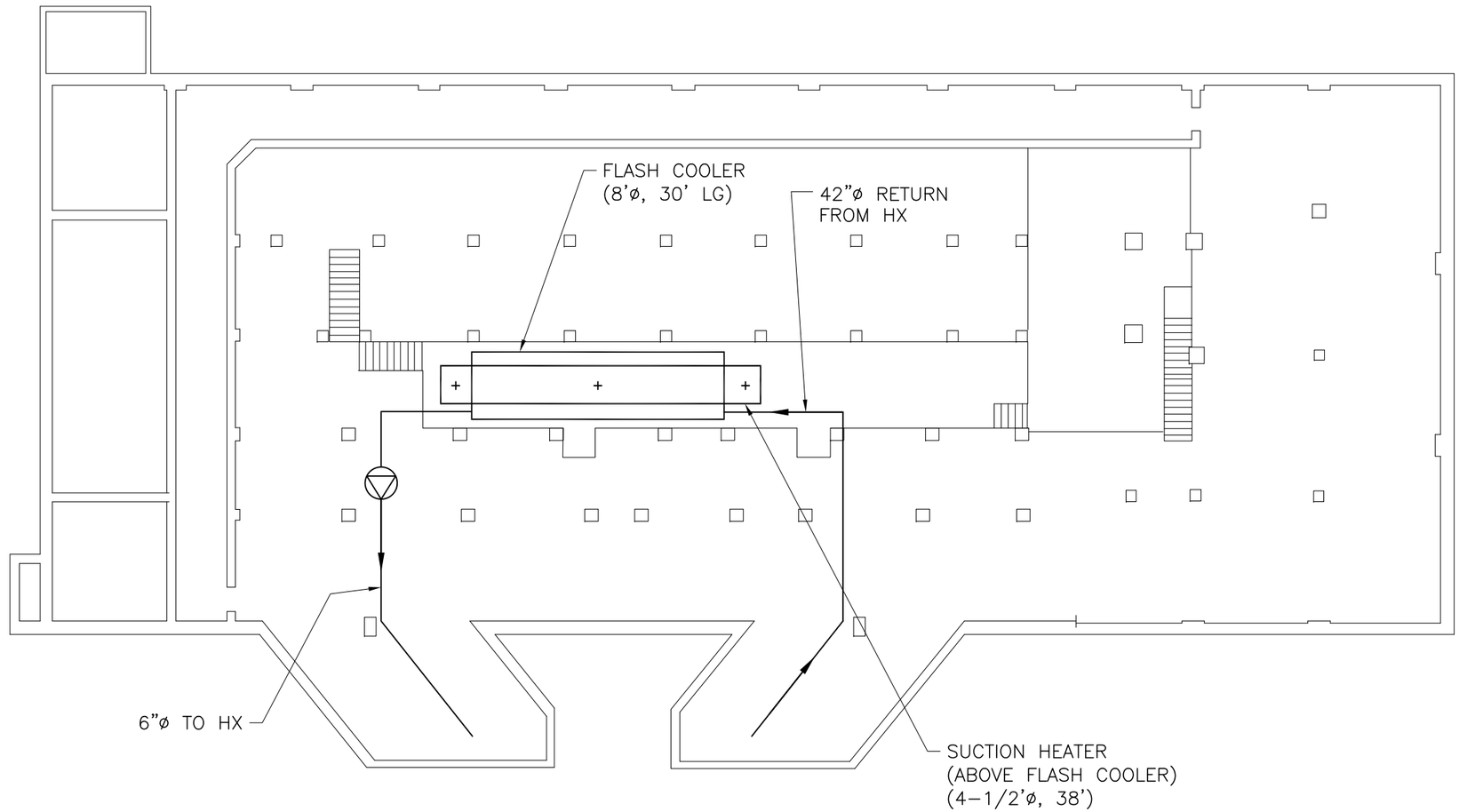

BASEMENT PLAN OPTION 1

1/16" = 1'-0"

Revision Date

AERO SYSTEMS ENGINEERING

NASA GLENN RESEARCH CENTER
REPLACEMENT OF REFRIGERATION
SYTEM FOR THE IRT

Collaborative Design, Ltd.
ARCHITECTS
2727 Tuller Parkway Suite 200
Dublin, Ohio 43017
Ph 614.798.5110 Fax 614.798.5105

© 2007, Collaborative Design, Ltd.

Project Number
06074

Date
03-9-07

Scale
AS NOTED

File Name
A1-1.dwg 192191 23842

Drawing Description

OPTION 1
BASEMENT
PLAN

A2

D. Compressor Plant Option 2 – Screw Plant

General Discussion

The second option selected would use a system of several screw compressors. Compression in this type of system is accomplished by the action of one or two screw shaped rotors. This type of system is widely used in medium-scale to large-scale packages for industrial and commercial applications. These compressors are relatively inexpensive and have a good size to performance ratio.

Selection Criteria

R507 was chosen as the refrigerant for this option because of its availability, safety, environmental impact, good operational conditions, and azeotropic (doesn't separate during evaporation) nature. Given the configuration of the HX, three separate refrigeration circuits allow for greater redundancy, and efficiency. One additional benefit of the smaller individual circuits is that they are within the commercial refrigeration size range and therefore more standard components and designs can be applied.

Given the low inlet pressure of the system, a 2-stage system is applicable, but some venders have single stage systems that will provide adequate performance. The compressors chosen for the concept are able to handle the required capacity with 7 single stage units. Because of the redundancy requirements this means a system having 8 compressor units grouped into 3 circuits. The circuits will be coupled with the three passes in the existing HX, this gives a distribution of three compressors for the first and second passes and 2 compressors for the third pass.

Changes

The change in scale and refrigerant requires and almost complete replacement of all of the system components with the exception of the HX. This configuration would fit within the existing building, but because of the extended downtime required for the changeover in the same building a new building is recommended. The most significant difference in requirements from option 1 is the need for three separate sets of liquid supply and return lines to the HX and the reconfiguration of the HX headers for three circuits.

Heat Exchanger Modifications

Option 2 will use the existing heat exchanger and orifices. The R507A refrigerant is a 50/50 blend of R143a and R125. Heat transfer will be comparable, and "vapor" side pressure losses will decrease because of higher mixture saturation temperature and density. A new pump has been budgeted and the pump will be selected to compensate for any increase in actual orifice pressure loss relative to expected loss that is due to flashing. This eliminates the cost and downtime for changing orifices. The heat exchanger

performance is expected to be equal to current performance. Effect on ice erosion is unknown. There may be some small improvement in performance with pump replacement.

Equipment & Mechanical Piping

This option utilizes a new building for the 8 screw compressors, each with a condenser, as well as the three economizers, three flash coolers, three liquid pumps and related piping. The equipment arrangement is shown on drawings A3 (Floor Plan) and A4 (Basement Plan). The basement contains the flash coolers, pumps and piping to/from the wind tunnel heat exchanger and the main floor contains all other equipment and piping. In this option, three separate piping circuits to and from the wind tunnel heat exchanger must be added. Each set of these lines are 6 inch diameter for the supply and 20 inch diameter for the return.

The three new flash coolers and suction headers would be located in basement and the 16 inch compressor suction lines pass through the floor penetrations. The equipment and piping locations are shown on the drawings. Cooling water lines for the eight condensers ties into the existing cooling water system located outside the building.

The volume of refrigerant R507 is estimated to be 20,000 liquid gallons as computed in work package 10 of the cost estimate.

The sizes for the new equipment and the piping system diameters were determined in ASE's Calculation Package 4 and are also shown on the arrangement drawings. The detail cost sheets show the equipment and piping sizes together with bill of material list for piping components. The cost sheet bill of materials includes pipe runs, elbows, flanges, valves, supports and other relevant pipe components. As can be observed in the cost sheets, piping stresses for design pressures are computed for selected wall thicknesses, cold piping is insulated, all piping is painted and refrigerant volumes are computed as part of the cost roll up. Piping and vessel materials are assumed to be SA 106 Gr. B and SA 516 Gr. 70 respectively.

Design of the piping system would be per ASME B31.5 and design of the pressure vessels would be per ASME.

Environmental & Safety Related to Refrigerants

Refrigerant safety is evaluated using two factors: toxicity and flammability. A rating to describe these two factors is applied by the American Society of Heating, Refrigerating and Air-Conditioning Engineers (ASHRAE). The rating for R-134a and R-507 is A1 which is the highest safety rating possible. Class A indicates no evidence of toxicity below a concentration of 400 ppm. Class 1 indicates the refrigerant will not propagate a flame under normal conditions in open air.

The environmental impact of a refrigerant is evaluated using two factors: the Ozone Depletion Potential (ODP) and the Global Warming Potential (GWP). The ODP describes the potential for a single molecule of the refrigerant to destroy the ozone layer. All refrigerants are compared to R11 which has been assigned an ODP value of 1.0. The lower the ODP value, the better the refrigerant is for the ozone layer and the environment. The ODP for R-134a is 0; the ODP for R-507 is also 0. The GWP is a measurement (usually over a 100-year period) of how much effect a refrigerant will have on global warming in relation to carbon dioxide which is assigned a value of 1. The lower the GWP, the better the refrigerant is for the environment. The GWP for R-134a is 1,300; the GWP for R-507 is 3,300.

In summary, both refrigerants have the same safety rating so there is no difference between them. Both R-134a and R-507 have the same ODP of 0. The GWP for R-134a is about 3 times lower than that of R-507. Therefore, refrigerant R-134a can be considered slightly better than R-507 in terms of lower environmental impacts.

Controls

Each of the compressors will have its own supervisory control system. These systems will need to be integrated with the existing IRT control system to provide the overall plant control. The design and commissioning teams will provide the IRT staff a detailed control description, and will work with them to debug and tune the system.

The primary control point for the system would be suction pressure and the setpoint would automatically be derived from air temperature control requirements. The system could automatically add and remove compressor packages from operation as the load changes.

The control of this system would be achieved in two automatic stages. The first stage would be the adjustment of slide valves in the compressors. This reduces volume swept by the compressor screws and reduces the capacity. When the slide valves near their lowest setting, hot gas would be allowed to bypass the condensers and flow directly into the flash cooler/suction line. This would regulate the overall suction mass flow and reduce the capacity at the HX. If reduced capacity were required for a long duration, compressor packages would be sequenced off to save energy and allow the remaining packages to run under more optimal conditions. Capacity regulation in a screw system is much more straight foreword and controllable then with a centrifugal system.

Shut Down

Each refrigeration circuit will have a pump-down and purge system capable of transferring all of the refrigerant charge into the high pressure receiver (and associated components) and eliminating any entrapped air from the system. Once in the pump-down state, the system could be valved off and powered down for extended periods.

Energy Efficiency

Screw compression is quite efficient over a wider range of conditions than the centrifugal systems. Although the peak efficiency is not as good, the expected average value will most likely be better. Given the wide operating range of this system, this option will consume equal or less energy then the other circuits in normal operation.

Reliability

Screw compressors have only 2 primary moving parts in the compressor itself, but are innately more complex than centrifugal units. Screw compressors depend on a large consistent flow of oil through the compressor to maintain safe operation. Proper maintenance is critical to the long-term operation of a screw plant. Screw compressors are often specified with a life span of around 15 years. For the relatively low duty needed for the IRT, the life span should be much longer.

Operation and Maintenance

The primary maintenance items for a screw plant are compressor inspection, oil system maintenance, filter maintenance, cooling water system maintenance, refrigeration recharging, bearing service, and leak detection and repair. This is quite dependant on the final installation and operation, but it would be reasonable to assume 1 man day per compressor per month for preventative maintenance and 1.5 man week per compressor per year for repairs.

Impact to Research

There is a possibility that some changes will occur to the operation of the wind tunnel as a result of the multiple circuiting of the system. Low to medium load tests could be run with only 1 or 2 circuits running, and/or each of the circuits could be operated at a different temperature set point. There is no good indication that this will improve the ice erosion issue, but more flexibility to experiment and adjust is present. Screw compressors do circulate some oil through the refrigeration circuit, although this is not expected to have any effect on system performance. The inherent oil carry over of screw compressors can potentially result in a wax build up in the HX orifices and impact the HX performance.

Design details

- R507 refrigerant
- Three refrigeration circuits
- Liquid recirculation system

- Example Compressor Configuration - 8 (3-3-2) compressors (capacity can be achieved with 7 operating)
- Example Compressor: Frick RWF II 676

Changes

- New building
- New high-pressure liquid receivers (3)
- New liquid sub-cooler/economizers (3)
- New liquid pumps (6)
- New flash coolers (3)
- New water-cooled condensers (8)
- New electrical distribution
- New cooling tower water piping
- Updated control system
- New refrigerant transfer system
- New refrigerant piping to the HX
- Reconfiguration of HX headers

Pros/Cons

Benefits

- Good capacity control range
- Common system components
- No changes needed to tunnel or to the HX inside of the tunnel
- Similar flow pattern through HX
- Higher suction pressure reduces amount of air infiltration into system
- Ability to control the three circuits to independent setpoints
- Highest average expected energy efficiency
- Multiple refrigeration circuits allow continued (although load limited) operation even with the loss of integrity of one of the circuits
- Maintenance skill set is more readily available

Limitations

- Downtime is expected to be 6 or 13 months. 6 months for a new building, 13 months for reuse of existing building.
- New building is recommended for this option
- Large amount of refrigerant is still required for operation
- Probability of leakage from large refrigeration systems is comparable to option 1
- R507 is more costly than R134a
- Significant changes to system piping, etc

Additional Notes

1. There is a possibility that the existing condensers could be reused depending on their condition and the final design. This would need to be determined at the time of design.

New Building Requirements

A new building is being proposed of this option. The building will be approximately 70 feet x 120 feet with a lower level. The lower level is required for the flash cooler. The building height (approx. 26 feet) is anticipated to be similar to the existing building to allow for a bridge crane to install and maintain the compressors.

It is anticipated that the new buildings lower level will require access to the existing piping tunnels going to the Heat Exchanger.

The building will need to be designed per the International Building Code that has been adopted by the Federal Government.

Building use group F-2 (factory use)
Construction Type 2B (non combustible construction)
Fully Sprinkled (wet sprinkler system for fire protection)
2 means of egress minimum
Fire Alarm system
Plumbing for a new restroom
General ventilation and heating
General lighting and power

It is anticipated the building will be constructed with a concrete foundation, Lower level and floor slab. The building walls will masonry with a steel roof structure.

Access to the building would be from the west for equipment installation and maintenance.

Existing building option

It is possible to reuse the existing building. It would result in a longer downtime for the IRT but would provide a possible cost savings of approximately $ 3,400,000.00. The savings are related to site, environmental and building cost. The saving is less than the cost of a new building since the existing building will require modifications structurally. The extent of the structural modifications are unknown. The structural analysis of the existing building was not included in the scope of this study.

Demolition

Existing refrigeration equipment and piping with in the building must be removed. If the existing building is reused.

If a new building is constructed the existing building and equipment will remain.

Site

See drawings C01 and C02 for proposed conceptual site plan and utilities. Figure C01 is the proposed site plan showing proposed pavements and C02 shows the existing utilities. The proposed site plan development must consider the following constraints:

- Existing Building Setbacks
- Site Demolition
- Pavement
- Grading
- Storm Water Management
- Utilities

The new building is proposed to be constructed just north of Building 9 (The Refrigeration Building) between Building 7 and the Ventilation Tower Building. The proposed building has been place to be approximately 20' off of each of these buildings. The placement assumes that the existing storage building is being demolished with the AWT. The current layout is constraining permitting only a 20' dimension between the existing buildings.

Site Demolition is predominantly being performed prior to this project with the proposed demolition of the AWT Building. Minor portions of site demolition should be included in the development of a new building except for the existing utilities which is further discussed below. Also, existing building foundations should be considered as part of the demolition costs associated with the construction of a building with a basement. The current demolition project only removes the foundations encountered to approximately three (3) feet below grade as indicated by NASA.

The proposed pavement for the new building will be designed to accommodate maintenance and housed equipment. Both walks and vehicular access along with parking will be designed to accommodate equipment, maintenance, personnel requirements and the building requirements. The existing site pavement adjacent to Building 7 is in disrepair and requires reconstruction and has been included in the cost estimate.

The general site topography is relatively flat and will not be a constraining item during design. Grades based upon drawings provided by NASA range in elevation

from 228 m to 231 m. Proposed grading will be based upon existing building finished floors and accessed pavements while maintaining positive drainage. Unless direct access to the basement or loading dock is required for maintenance, it is likely that no retaining walls will be necessary.

The proposed build layout must consider storm water management as a general construction permit (NOI) is required for sites disturbing more than one (1) acre. A Storm Water Pollution Prevention Plan (SWPPP) will be required and prepared in accordance with NASA's General Storm Water Plan (SWMP). This includes Best Management Practices (BMPs) during construction (Erosion Control Measures) and post-construction (Water Quality).

The existing utilities as shown in Figure C02 and are based upon NASA's Lewis Automated mapping System (LAMS) and identify only underground utilities. For this study it is assumed that the existing utilities are not being removed or relocated with the AWT demolition project. The existing utilities identified within the proposed building footprint are as follows:

1. Storm Sewers (S)
2. Sanitary Sewers (SAN)
3. Domestic Water (DW)
4. Chilled Water Service and Return Lines (CHWS)(CHWR)
5. Cooling Tower Water Service and Return Lines (CTWS)(CTWR)
6. Power/Electrical Service (P)
7. Telephone (T)
8. Steam Lines (ST)
9. Carbon Dioxide Lines (CO2)
10. Combustible Air (COMB A)
11. Service Air (SA)
12. Gas (G)
13. Other Unidentified Lines

The existing utilities encountered with the proposed building footprint must be either abandoned or re-directed in accordance with or as directed by NASA but for purposes of cost estimating it is assumed that all existing utilities are to be relocated. In addition to the existing relocated utilities the building will be service by proposed utilities including but not limited to power/electrical, telephone/communications, sanitary sewer, gas, steam, storm sewer and water service (DW, CWWS/CHRS and CTWS/CTWR).

Structural

See Option 2 building plans for building size and layout. See general structural design criteria in Section H.

- For Option 2, a new building with a basement will be constructed adjacent to the existing refrigeration building.
- The first floor will be at grade level and will be a concrete slab on either steel or concrete framing.
- The basement will have cast-in-place concrete walls and floor slab. It could be either a full or partial basement depending on piping and equipment requirements. If phasing and scheduling permits, the basement of the existing refrigeration could be used for new equipment and connected to the basement of the new building.
- Minimizing the size of the new building's basement may be desirable to minimize removal of existing foundations within the footprint of the new building.
- The new building will be provided with an overhead traveling bridge crane.
- Various access holes, equipment pads, and equipment and pipe supports will need to be provided both within the building and between the new building and the existing building and the IRT building.
- The building's superstructure will most likely be a steel skeleton with steel columns to support the crane runway and steel roof trusses or joists. The building's skin could be masonry to match existing buildings or metal panels to reduce costs.

HVAC & Plumbing

The new building would have heat for the winter months and general ventilation for the remaining seasons. It is anticipated the control room would be air conditioned.

Ventilation required with the type and quantity of refrigerants will need to be reviewed when the final design is completed. It is possible that refrigerant leak detectors will be required and additional ventilation.

A restroom, water coolers, floor drains and utility sinks as required by the building code will be the limited amount of plumbing. The will require sanitary and domestic water routed to the building.

Electrical

Background Information

Substation "E" consists of two (2) 10/12.5 MVA (million volt-amperes), 34.5-2.4 kV (kilovolt) transformers that are used to power Building #9, (IRT Refrigeration). These transformers have secondary ratings of 3,000-amps at 2.4-kV. Five (5) 2.4-kV 1200-amp bus configurations are used to distribute power to the various machines fed from this substation. Two of the bus are fed from one transformer and three bus from the other. A 3,000-amp tie breaker can be closed to power both bus arrangements in the event that one transformer is out-of-service; however, the maximum load capable of being operated under this condition is limited to 3,000-amps.

Building #9 (Existing IRT Refrigeration Building) contains approximately 18,000-horsepower of connected electrical equipment. In addition to IRT equipment, the 2.4-kV bus distribution also powers approximately 2662-horsepower of equipment located in the Natural Gas Compressor Building (Bldg #18-2), Fire Pump Building (Bldg #18-1), and Central Air Conditioning System.

Electrical load distribution for the five (5) 2.4 kV bus systems are roughly subdivided as follows:

bus WE1 feeds Central Air Conditioning System (1037-horsepower), Natural Gas Compressor Building (1500-horsepower)
bus WE2 feeds 3,000-horsepower of compressors, 900-horsepower of miscellaneous loads, and 125-horsepower of Fire Pumps
bus WE3 feeds 3,000-horsepower of compressors and 400-horsepower of miscellaneous loads
bus WE4 feeds 4,500-horsepower of compressors and 800-horsepower of miscellaneous loads
bus WE5 feeds 1,500-horsepower of compressors (with a spare 1,500-horsepower feeder that is no longer in use) and 1,235-horsepower of miscellaneous loads

Electrical Requirements

Option 2 consists of eight (8) 2,000-horsepower screw compressors to be installed in a new building. The existing 2.4-kV distribution system would not support this option due to some loads exceeding the 1200-amp bus feeder circuit breaker ratings. A new 2400 volt electrical distribution system is recommended for this option.

Initial costs and O&M costs

The IRT Construction Cost Estimate provides a cost summary and cost estimate details, including breakdowns and supporting pipe wall thickness calculations for the individual Work Packages.

Cost estimate details developed by ASE include vendor quotes, cost for similar equipment used on other projects and information extracted from the Richardson Cost Estimating Manual.

The three work packages containing the piping estimates have detail spread sheets that are bill of material based. Thus pipe run lengths, number of elbows, valves etc are priced individually. Each piping components has material, labor and installation costs; in most cases, Richardson has one entry for material and installed labor. The pipe diameters on the detail spread sheets are determined in ASE Calculation Package 4. The mass flow rates used in these calculations are consistent with those on the Process Drawings. The piping and equipment arrangement used in the pricing is consistent with that shown on the building/equipment arrangement drawings.

The O&M costs are a yearly estimate. The energy estimates were generated using generic HP/Ton efficiency ratings for the various systems and warm/cool cooling water temperatures. An energy cost of $0.05 per kWh was used as the basis. Refrigerant expenses were included separately for comparison to the existing system, but other fluids (oil, D-12, etc) are included in the maintenance budget. A cost factor of $3/Lb for R134A and $9/Lb for R507 was used. The maintenance calculations are based on percentage of purchase estimates adjusted to the duty and usage.

Operation Costs per year

Energy

	Refrigeration Capacity	Minimum HP/Ton	Maximum HP/Ton	Required Comp HP	Pump HP	Total HP	KW	KW Load	Runtime	Total Energy	Energy Cost @ 0.05/KW
Option 2	1100	4	5.7	5335	50	5385	4017.21	4619.792	1000	4619791.5	$ 230,989.58

Refrigerant

	lb/yr		
Option 2	2500	9	22500

Maintenance

	Purchase Cost	Percentage	Total Cost
Option 2	3000000	0.05	150000

Option 2		
Energy	$	230,989.58
Refrigerant	$	22,500.00
Maintenance	$	150,000.00
Total	**$**	**403,489.58**

Summary of IRT Mechanical Construction Cost Estimate

WP	Work Package Description, Option 2		Material/Equip (Installed)	Engineering	Total	%
21	Building, 70 ft x 120 ft, new		$ 3,125,000	$198,000	3,323,000	29.5%
10	Piping System		$2,215,939	$198,000	$2,413,939	21.4%
11	Compressor System		$3,704,850	$165,900	$3,870,750	34.3%
12	Flash Cooler		$237,000	$31,575	$268,575	2.4%
13	Condensers and Economizers		$277,000	$27,000	$304,000	2.7%
14	Receivers		$87,000	$24,000	$111,000	1.0%
18	Pumps		$24,900	$3,600	$28,500	0.3%
8	Controls		$350,000	$63,000	$413,000	3.7%
9	Electrical Power Supply		$500,000	$43,200	$543,200	4.8%
	Subtotal, Option 2		$10,521,689	$754,275	$11,275,964	100.0%
	Contractor Overhead:	10%	$1,052,169	$75,428	$1,127,596	
	Subtotal:		$11,573,858	$829,703	$12,403,560	
	Contractor Profit:	15%	$1,736,079	$124,455	$1,860,534	
	Option 2 Total (March 2007 $):		$13,309,937	$954,158	$14,264,095	
	Option 2 Total in Existing Building		$9,865,974	$794,228	$10,660,202	

ASE Construction Estimate
Work Package 8 -- Controls

			Equipment or Material (Installed)					Engineering				
Ref.	Description	Tag Number	Cost Per Unit	Unit Measure	Quantity	Total Cost	Basis for Estimate	Hours	Per Unit	Total	Basis for Estimate	Total Costs
	Engineering					$ -		700	$ 75	$ 52,500	ASE Estimate	$ 52,500
									$ 75	$ -		$ 300,000
	Material / Equipment		$ 300,000		1	$ 300,000	ASE Est		$ 75	$ -		#REF!
									$ 75	$ -		$ -
	Supervisory PLC and Interface		$ 50,000		1	$ 50,000	ASE Est		$ 75	$ -		$ 50,000
									$ 75	$ -		$ -
	Installation - included in above					$ -			$ 75	$ -		$ -
									$ 75	$ -		$ -
									$ 75	$ -		$ -
									$ 75	$ -		$ -
						$ -			$ 75	$ -		$ -
	Documentation							70	$ 75	$ 5,250	See Note 2	$ 5,250
	Support for Integrated Tests							35	$ 75	$ 2,625	See Note 3	$ 2,625
	Support for Operational Validation Tests							35	$ 75	$ 2,625	See Note 4	$ 2,625
	TOTAL					**$ 350,000**		**840**		**$ 63,000**		**#REF!**

NOTES:

1	Hourly Engineering Labor Cost =	$75	
2	Documentation	10%	of Engineering Design Cost
3	Support for Integrated Tests	5%	of Engineering Design Cost
4	Support for Operational Validation Tests	5%	of Engineering Design Cost
5	ASE estimates based on Design, Specification and / or Supply of similar equipment		

ASE Construction Estimate
Work Package 9 -- Electrical Power Supply

			Equipment or Material (Installed)					Engineering				
Ref.	Description	Tag Number	Cost Per Unit	Unit Measure	Quantity	Total Cost	Basis for Estimate	Hours	Per Unit	Total	Basis for Estimate	Total Costs
								480	$ 75	$ 36,000		$ 36,000
	Compresor Power Wiring		$ 400,000		1	$ 400,000	ASE Est		$ 75	$ -		$ 400,000
						$ -			$ 75	$ -		$ -
	Valve Wiring		$ 100,000		1	$ 100,000	ASE Est		$ 75	$ -		$ 100,000
						$ -			$ 75	$ -		$ -
						$ -			$ 75	$ -		$ -
						$ -			$ 75	$ -		$ -
						$ -			$ 75	$ -		$ -
						$ -			$ 75	$ -		$ -
						$ -			$ 75	$ -		$ -
						$ -			$ 75	$ -		$ -
						$ -			$ 75	$ -		$ -
						$ -			$ 75	$ -		$ -
						$ -			$ 75	$ -		$ -
						$ -			$ 75	$ -		$ -
	Documentation							48	$ 75	$ 3,600	See Note 2	$ 3,600
	Support for Integrated Tests							24	$ 75	$ 1,800	See Note 3	$ 1,800
	Support for Operational Validation Tests							24	$ 75	$ 1,800	See Note 4	$ 1,800
	TOTAL					**$ 500,000**		**576**		**$ 43,200**		**$ 543,200**

NOTES:

1	Hourly Engineering Labor Cost =	$75	
2	Documentation	10%	of Engineering Design Cost
3	Support for Integrated Tests	5%	of Engineering Design Cost
4	Support for Operational Validation Tests	5%	of Engineering Design Cost
5	ASE estimates based on Design, Specification and / or Supply of similar equipment		

ASE Construction Estimate
Work Package 10 -- Piping Systems

			Equipment or Material (Installed)					Engineering				
Ref.	Description	Tag Number	Cost Per Unit	Unit Measure	Quantity	Total Cost	Basis for Estimate	Hours	Per Unit	Total	Basis for Estimate	Total Costs
	Piping and Valves		$ 1,225,795	Lump Sum	1	$ 1,225,795	See Sheet WP6 - Details	750	$ 75	$ 56,250	ASE Estimate	$ 1,282,045
	Insulation		$ 451,859	Lump Sum	1	$ 451,859	See Sheet WP6 - Details	150	$ 75	$ 11,250		$ 463,109
	R507 Refrigerant		$ 538,285	Lump Sum	1	$ 538,285	See Sheet WP6 - Details	100	$ 75	$ 7,500		$ 545,785
	Overall Piping System Analysis					$ -		1200	$ 75	$ 90,000	ASE Estimate	$ 90,000
						$ -			$ 75	$ -		$ -
						$ -			$ 75	$ -		$ -
						$ -			$ 75	$ -		$ -
						$ -			$ 75	$ -		$ -
						$ -			$ 75	$ -		$ -
						$ -			$ 75	$ -		$ -
						$ -			$ 75	$ -		$ -
	Documentation							220	$ 75	$ 16,500	See Note 2	$ 16,500
	Support for Integrated Tests							110	$ 75	$ 8,250	See Note 3	$ 8,250
	Support for Operational Validation Tests							110	$ 75	$ 8,250	See Note 4	$ 8,250
	TOTAL					**$ 2,215,939**		**2640**		**$ 198,000**		**$ 2,413,939**

NOTES:

1 Hourly Engineering Labor Cost = $75
2 Documentation 10% of Engineering Design Cost
3 Support for Integrated Tests 5% of Engineering Design Cost
4 Support for Operational Validation Tests 5% of Engineering Design Cost
5 ASE estimates based on Design, Specification and / or Supply of similar equipment
6 Sheet WP10 -- Details: ASE valve cost estimate model based on actual costs of similar valves from previous recent projects
7 Sheet WP10 -- Details: Costs from Richardson cost estimating manual (2002) increased by factor of 1.4 to account for: a) steel price increases, and b) limited quantities and other relevant factors per Richardson manual
8 Sheet WP10 -- Details: Piping lengths are approximate, average lengths for each identified system based on ASE layout Drawing

ASE Construction Estimate
Work Package 10 -- Piping Systems
Cost Estimate Details

										Materials / Equipment Cost Basis			Installation Cost				
Piping Run/Component	**Pressure, psig**	**OD, inch**	**Wall thickness, inch (min)**	**Stress, psi**	**Ext P Cap, psi (approx)**	**Length, mm**	**Volume ft3**	**Length, ft**	**Wt, lbs**	**Per ft**	**Per lb**	**Per Item**	**Labor hrs**	**Labor Cost/hr**	**Quantity**	**Total Cost**	**Estimate Basis / Comments**
Piping and Valves																**$ 1,225,795**	
Main Return lines from HX to Flash Coolers																	
Pipe	150	20	0.25	6000	25.00	100000	2,147	328	17501	$ 133.00					3	$ 130,906	Richardson
Fileld beveling & butt welds		20							0			$ 809.00			24	$ 19,416	Richardson
Exp Joint		20										$ 2,500.00	12	$ 50.00	6	$ 18,600	Richardson
Elbow		20	0.375					5	320			$ 1,292.00			24	$ 31,008	Richardson
150 lb flanges		20							180		$ 4.20				24	$ 18,144	Richardson
150 lb flange bolts & gaskets		20										$ 526.00			24	$ 12,624	Richardson
Painting pipes, based on area in ft2		20				100,000		328	1718	ft2		$ 5.00			3	$ 25,768	Means Estimate
Support Tower									12901		$ 5.00				1	$ 64,504	Weight = 20% of Supported Weight
Subtotal																$ 320,969	
HX Modules to Return lines																	
Pipe	150	6	0.1875	2400	62.50	2000	31	7	79	$ 31.00					24	$ 4,882	Richardson
Fileld beveling & butt welds		6							0			$ 308.00			24	$ 7,392	Richardson
Nipple		6							14			$ 197.00	4	$ 50.00	24	$ 9,528	Richardson
Elbow		6	0.375					2	25			$ 202.00			48	$ 9,696	Richardson
Exp Joint		6										$ 2,000.00	2	$ 50.00	24	$ 50,400	Richardson
150 lb flanges		6							24		$ 4.20				48	$ 4,838	Richardson
150 lb flange bolts & gaskets		6										$ 119.00			48	$ 5,712	Richardson
Painting pipes, based on area in ft2		6				48,000		157	247	ft2		$ 5.00			1	$ 1,237	Means Estimate
Support Tower									916		$ 5.00				1	$ 4,578	Weight = 20% of Supported Weight
Subtotal																$ 98,263	
Flash Cooler to Compressors																	
Pipe	150	16	0.375	3200	46.88	10000		33	2100	$ 81.00					8	$ 21,260	Richardson
Fileld beveling & butt welds		16							0			$ 598.00			16	$ 9,568	Richardson
BF valve		16										$ 8,000	16	$ 50.00	8	$ 70,400	Vanessa quote
Elbow		16	0.375					4	206			$ 773.00			16	$ 12,368	Richardson
150 lb flanges		16							140		$ 4.20				16	$ 9,408	Richardson
150 lb flange bolts & gaskets		16										$ 343.00			16	$ 5,488	Richardson
Painting pipes, based on area in ft2		16				10,000		33	137	ft2		$ 5.00			8	$ 5,497	Means Estimate
Support Tower									4467		$ 5.00				1	$ 22,337	Weight = 20% of Supported Weight
Subtotal																$ 156,326	
Comp to Economizer																	
Pipe	350	10	0.2500	7,000	50.00	32,000	172	105	2800	$ 54.00					3	$ 17,008	Richardson. Assume 3/8 wall
Field beveling & butt welds		10										$ 412.00			12	$ 4,944	Richardson
Check Valve		6										$ 1,680	4	$ 50.00	8	$ 15,040	ASE valve cost estimate model
Elbow		10	0.375					6	88			$ 384.00			9	$ 3,456	Richardson.
Nipple		6										$ 197.00			8	$ 1,576	Richardson.
150 lb flanges		6							24		$ 4.20				8	$ 806	Richardson
150 lb flange bolts & gaskets		6										$ 119.00			8	$ 952	Richardson
150 lb flanges		10							80		$ 4.20				9	$ 3,024	Richardson
150 lb flange bolts & gaskets		10										$ 228.00			6	$ 1,368	Richardson
Painting pipes, based on area in ft2		10				32,000		105	275	ft2		$ 5.00			3	$ 4,123	Means Estimate
Support Tower									1983		$ 5.00				1	$ 9,913	Weight = 20% of Supported Weight
Subtotal																$ 62,210	
Compressors to Condensors																	
Pipe	350	8	0.1875	7466.7	46.88	4000	37	13	210	$ 41.00					8	$ 4,304	Richardson
Field beveling & butt welds		8							0			$ 349.00			16	$ 5,584	Richardson
CV valve		8										$ 4,152	4	$ 50.00	16	$ 69,632	ASE valve cost estimate model
Elbow		8	0.375					8	50			$ 270.00			9	$ 2,430	Richardson
Tee		8							60			$ 391.00			24		
150 flanges		8							39		$ 4.20				24	$ 3,931	Richardson
150 lb flange bolts & gaskets		8										$ 100.00			24	$ 2,400	Richardson
Painting pipes, based on area in ft2		8				4,000		13	27	ft2		$ 5.00			8	$ 1,099	Means Estimate
Support Tower									901		$ 5.00				1	$ 4,506	Weight = 20% of Supported Weight
Subtotal																$ 93,887	
Condensors to Receivers, Main																	

ASE Construction Estimate
Work Package 10 -- Piping Systems
Cost Estimate Details

										Materials / Equipment Cost Basis			Installation Cost				
Piping Run/Component	Pressure, psig	OD, inch	Wall thickness, inch (min)	Stress, psi	Ext P Cap, psi (approx)	Length, mm	Volume ft3	Length, ft	Wt, lbs	Per ft	Per lb	Per Item	Labor hrs	Labor Cost/hr	Quantity	Total Cost	Estimate Basis / Comments
Pipe	350	6	0.1875	5600	62.50	24000	46	79	945	$ 31.00					3	$ 7,323	Richardson
Fileld beveling & butt welds		6							0			$ 308.00			6	$ 1,848	Richardson
BF valve		6										$ 1,800.00	4	$ 50.00	3	$ 6,000	Richardson
Tee		6							30			$ 293.00			5	$ 1,465	Richardson
Elbow		6	0.375					2	25			$ 202.00			9	$ 1,818	Richardson
150 lb flanges		6							24		$ 4.20				6	$ 605	Richardson
150 lb flange bolts & gaskets		6										$ 119.00			6	$ 714	Richardson
Painting pipes, based on area in ft2		6				24,000		79	124	ft2		$ 5.00			3	$ 1,855	Means Estimate
Support Tower									671		$ 5.00				1	$ 3,354	Weight = 20% of Supported Weight
Subtotal																$ 24,982	
Condensor to Receiver Mains																	
Pipe	350	4	0.1875	3733	93.75	15000	34	49	394	$ 21.00					8	$ 8,268	Richardson.
Fileld beveling & butt welds		4							0			$ 225.00			16	$ 3,600	Richardson
Reducer 6 to 4		4							9			$ 165.00			8	$ 1,320	Richardson
Elbow		4	0.375					2	25			$ 146.00			16	$ 2,336	Richardson.
150 lb flanges		4							15		$ 4.20				24	$ 1,512	Richardson
150 lb flange bolts & gaskets		4										$ 97.00			16	$ 1,552	Richardson
Painting pipes, based on area in ft2		4				15,000		49	52	ft2		$ 5.00			8	$ 2,061	Means Estimate
Support Tower									796		$ 5.00				1	$ 3,982	Weight = 20% of Supported Weight
Subtotal																$ 24,631	
Receiver to Economizer & L Feed Control Valve																	
Pipe	350	6	0.1875	5600	62.50	24000	46	79	945	$ 31.00					3	$ 7,323	Richardson
Fileld beveling & butt welds		6							0			$ 308.00			6	$ 1,848	Richardson
BF valve		6										$ 1,800.00	4	$ 50.00	9	$ 18,000	Richardson
Tee		6							30			$ 293.00			3	$ 879	Richardson
Elbow		6	0.375					2	25			$ 202.00			12	$ 2,424	Richardson
150 lb flanges		6							24		$ 4.20				12	$ 1,210	Richardson
150 lb flange bolts & gaskets		6										$ 119.00			12	$ 1,428	Richardson
Painting pipes, based on area in ft2		6				24,000		79	124	ft2		$ 5.00			3	$ 1,855	Means Estimate
Support Tower									703		$ 5.00				1	$ 3,513	Weight = 20% of Supported Weight
Subtotal																$ 38,480	
Liquid Feed Control Valve to Flash Cooler																	
Pipe	150	12	0.2500	3,600	41.67	4,000		13	420	$ 66.00					3	$ 2,598	Richardson
Field beveling & butt welds		12										$ 494.00			6	$ 2,964	Richardson
Elbow		12	0.375					6	125			$ 504.00			9	$ 4,536	Richardson.
150 lb flanges		12							80		$ 4.20				6	$ 2,016	Richardson
150 lb flange bolts & gaskets		12										$ 228.00			6	$ 1,368	Richardson
Painting pipes, based on area in ft2		12				4,000		13	41	ft2		$ 5.00			3	$ 618	Means Estimate
Support Tower									573		$ 5.00				1	$ 2,865	Weight = 20% of Supported Weight
Subtotal																$ 16,966	
Hot Gas Control Valve to Flash Cooler																	
Pipe	150	12	0.2500	3,600	41.67	4,000		13	420	$ 66.00					3	$ 2,598	Richardson
Field beveling & butt welds		12										$ 494.00			6	$ 2,964	Richardson
BF valve		12										$ 7,411	4	$ 50.00	3	$ 22,833	ASE valve cost estimate model
Elbow		12	0.375					6	125			$ 504.00			6	$ 3,024	Richardson.
150 lb flanges		12							80		$ 4.20				6	$ 2,016	Richardson
150 lb flange bolts & gaskets		12										$ 228.00			6	$ 1,368	Richardson
Painting pipes, based on area in ft2		12				4,000		13	41	ft2		$ 5.00			3	$ 618	Means Estimate
Support Tower									498		$ 5.00				1	$ 2,490	Weight = 20% of Supported Weight
Subtotal																$ 37,912	
Comp to Hot Gas Control Valve																	
Pipe	350	4	0.1875	3733	93.75	36000	31	118	945	$ 21.00					3	$ 7,441	Richardson.
Fileld beveling & butt welds		4							0			$ 225.00			6	$ 1,350	Richardson
Tee		4							30			$ 224.00			3	$ 672	Richardson
Elbow		4	0.375					2	25			$ 146.00			6	$ 876	Richardson.
150 lb flanges		4							15		$ 4.20				6	$ 378	Richardson
150 lb flange bolts & gaskets		4										$ 97.00			6	$ 582	Richardson
Painting pipes, based on area in ft2		4				36,000		118	124	ft2		$ 5.00			3	$ 1,855	Means Estimate

ASE Construction Estimate
Work Package 10 -- Piping Systems
Cost Estimate Details

										Materials / Equipment Cost Basis			Installation Cost				
Piping Run/Component	**Pressure, psig**	**OD, inch**	**Wall thickness, inch (min)**	**Stress, psi**	**Ext P Cap, psi (approx)**	**Length, mm**	**Volume ft3**	**Length, ft**	**Wt, lbs**	**Per ft**	**Per lb**	**Per Item**	**Labor hrs**	**Labor Cost/hr**	**Quantity**	**Total Cost**	**Estimate Basis / Comments**
Support Tower									633		$ 5.00				1	$ 3,165	Weight = 20% of Supported Weight
Subtotal																$ 16,319	
Pump Down Compressor																	
Pipe	350	2	0.1875	1867	187.50	5000	1	16	66	$ 15.00					3	$ 738	Richardson
Fileld beveling & butt welds		2							0			$ 140.00			6	$ 840	Richardson
Elbow		2	0.375					2	25			$ 90.00			6	$ 540	Richardson.
Nipple		2										$ 110.00			3	$ 330	Richardson
BF valve		2										$ 1,000	4	$ 50.00	6	$ 7,200	ASE valve cost estimate model
Check Valve		2										$ 560.00	4	$ 50.00	3	$ 2,280	Richardson
150 lb flanges		2							6		$ 4.20				30	$ 756	Richardson
150 lb flange bolts & gaskets		2										$ 50.00			27	$ 1,350	Richardson
Painting pipes, based on area in ft2		2				5,000		16	9	ft2		$ 5.00			3	$ 129	Means Estimate
Support Tower									105		$ 5.00				1	$ 527	Weight = 20% of Supported Weight
Subtotal																$ 14,690	
Flash Cooler to HX, includes liquid pump																	
Pipe	150	6	0.1875	2400	62.50	100000	193	328	3938	$ 30.00					3	$ 29,528	Richardson.
Fileld beveling & butt welds		6							0			$ 308.00			24	$ 7,392	Richardson
BF valve		6										$ 1,800.00	4	$ 50.00	6	$ 12,000	Richardson
Elbow		6	0.375					2	25			$ 202.00			24	$ 4,848	Richardson.
150 lb flanges		6							24		$ 4.20				30	$ 3,024	Richardson
150 lb flange bolts & gaskets		6										$ 119.00			30	$ 3,570	Richardson
Painting pipes, based on area in ft2		6				100,000		328	515	ft2		$ 5.00			2	$ 5,154	Means Estimate
Support Tower									2627		$ 5.00				1	$ 13,133	Weight = 20% of Supported Weight
Subtotal																$ 78,649	
HX Modules to Main Supply																	
Pipe	350	2	0.1875	1867	187.50	2000	3	7	26	$ 15.00					24	$ 2,362	Richardson
Fileld beveling & butt welds		2							0			$ 140.00			24	$ 3,360	Richardson
Elbow		2	0.375					2	25			$ 90.00			48	$ 4,320	Richardson.
Nipple		2										$ 110.00			24	$ 2,640	Richardson
BF valve		2										$ 1,000	4	$ 50.00	24	$ 28,800	ASE valve cost estimate model
Check Valve		2										$ 560.00	4	$ 50.00	24	$ 18,240	Richardson
150 lb flanges		2							6		$ 4.20				72	$ 1,814	Richardson
150 lb flange bolts & gaskets		2										$ 50.00			48	$ 2,400	Richardson
Painting pipes, based on area in ft2		2				2,000		7	3	ft2		$ 5.00			24	$ 412	Means Estimate
Support Tower									452		$ 5.00				1	$ 2,262	Weight = 20% of Supported Weight
Subtotal																$ 66,611	
Cooling Water to Condensors																	
Pipe	85	18	0.3750	2,040	41.67	32,000		105	7561	$ 88.00					6	$ 55,433	Richardson.
Field beveling & butt welds		18										$ 661.00			12	$ 7,932	Richardson
Valve		18										$ 1,800	12	$ 50.00	6	$ 14,400	Vanessa quote
Elbow		18	0.375					6	260			$ 934.00			12	$ 11,208	Richardson
Nipple		10							39			$ 302.00			16	$ 4,832	Richardson
Exp Joint		10										$ 2,000.00	2	$ 50.00	16	$ 33,600	Richardson
150 lb flanges		10							80		$ 4.20				16	$ 5,376	Richardson
150 lb flange bolts & gaskets		10										$ 228.00			16	$ 3,648	Richardson
150 lb flanges		18							150		$ 4.20				16	$ 10,080	Richardson
150 lb flange bolts & gaskets		18										$ 430.00			16	$ 6,880	Richardson
Painting pipes, based on area in ft2		18				32,000		105	495	ft2		$ 5.00			1	$ 2,474	Means Estimate
Support Tower									10801		$ 5.00				1	$ 54,004	Weight = 20% of Supported Weight
Subtotal																$ 209,866	
Pipe Insualation, Urethane w/ Vapor Barrier																**$ 451,859**	
and Jacket, 3 inches thick									**Area ft2**		**cost/ft2**						
Liquid Feed Control Valve to Flash Cooler		12	0.25	0	41.67	4,000		13	41		$ 50.00				3	$ 6,184	Richardson
Flash Cooler to HX		6	0.1875	0	62.50	100000		328	515		$ 50.00				3	$ 77,303	Richardson
Flash Cooler to Compressors		16	0.375	0	46.88	10000		33	137		$ 50.00				8	$ 54,971	Richardson

ASE Construction Estimate
Work Package 10 -- Piping Systems
Cost Estimate Details

										Materials / Equipment Cost Basis			Installation Cost				
Piping Run/Component	**Pressure, psig**	**OD, inch**	**Wall thickness, inch (min)**	**Stress, psi**	**Ext P Cap, psi (approx)**	**Length, mm**	**Volume ft3**	**Length, ft**	**Wt, lbs**	**Per ft**	**Per lb**	**Per Item**	**Labor hrs**	**Labor Cost/hr**	**Quantity**	**Total Cost**	**Estimate Basis / Comments**
Return line from HX to Flash Cooler		20	0.3750	0	37.50	100,000		328	1718		$ 50.00				3	$ 257,677	Richardson
Flash Cooler 8 ft dia 15 ft lg		96					1,206	8	201		$ 50.00				3	$ 30,159	Richardson
Suction Header, 4.5 ft dia, 25 ft lg		54						7	99		$ 50.00				3	$ 14,844	Richardson
Economizer		39					174	7	71		$ 50.00				3	$ 10,721	Richardson
Reciever 8 ft dia 16 ft lg		96					2,413	16	402		$ 50.00				3	$ 60,319	Richardson
Refrigerant Volume, R507																	
												Cost/ft3					
Piping/Components =							2,645	ft3	**19785**	**gallons**							20% reciever, 100% piping
(above items only)																	50% cooler and economizer
HX =	462.3	10	155.6	0	1950.30	0	46.23	ft3	**346**	**gallons**							
(estimate from NASA)	HX ft3	% liq	Cooler to Orif ft3	% liq	HX to Cooler ft	% liq											
Total Refrigerant =							2691	ft3	**20130**	**gallons**		$ 200.00				**$ 538,285**	

ASE Construction Estimate
Work Package 11 -- Compressor System

			Equipment or Material (Installed)					Engineering				
Ref.	Description	Tag Number	Cost Per Unit	Unit Measure	Quantity	Total Cost	Basis for Estimate	Hours	Per Unit	Total	Basis for Estimate	Total Costs
	Engineering					$ -			$ 75	$ -		$ -
	System Performance Analysis					$ -		1200	$ 75	$ 90,000	ASE Estimate	$ 90,000
	Equipment Design / Specification					$ -		400	$ 75	$ 30,000	ASE Estimate	$ 30,000
	Compressors					$ -			$ 75	$ -		$ -
	Compressor Skid, Frick RWF II 676, 16 ft lg, 6.2 ft wd, 7.3 ft ht		$ 450,000	Ea	8	$ 3,600,000	York ROM	250	$ 75	$ 18,750		$ 3,618,750
	Mounting Beams, W30X210, 80 ft lg		$ 8,400	Ea	4	$ 33,600	$0.50/lb	260	$ 75	$ 19,500		$ 53,100
									$ 75	$ -		$ -
									$ 75	$ -		$ -
									$ 75	$ -		$ -
									$ 75	$ -		$ -
	Installation:					$ -			$ 75	$ -		$ -
	Compressor Skid		$ 75	labor hour	750	$ 56,250	ASE Estimate		$ 75	$ -		$ 56,250
	Mounting Beams		$ 75	labor hour	200	$ 15,000	ASE Estimate		$ 75	$ -		$ 15,000
						$ -			$ 75	$ -		$ -
	Documentation							51	$ 75	$ 3,825	See Note 2	$ 3,825
	Support for Integrated Tests							26	$ 75	$ 1,913	See Note 3	$ 1,913
	Support for Operational Validation Tests							26	$ 75	$ 1,913	See Note 4	$ 1,913
	TOTAL					**$ 3,704,850**		**612**		**$ 165,900**		**$ 3,750,750**

NOTES:

1	Hourly Engineering Labor Cost =	$75	
2	Documentation	10%	of Engineering Design Cost
3	Support for Integrated Tests	5%	of Engineering Design Cost
4	Support for Operational Validation Tests	5%	of Engineering Design Cost
5	ASE estimates based on Design, Specification and / or Supply of similar equipment		

ASE Construction Estimate
Work Package 12 -- Flash Cooler

			Equipment or Material (Installed)					Engineering				
Ref.	Description	Tag Number	Cost Per Unit	Unit Measure	Quantity	Total Cost	Basis for Estimate	Hours	Per Unit	Total	Basis for Estimate	Total Costs
	Flash Cooler, 8 ft dia, 8 ft lg		$ 40,000	Lump Sum	3	$ 120,000	Richardson Sect 100-341	200	$ 75	$ 15,000	ASE Estimate	$ 135,000
	Internal Baffles		$ 12,000	Lump Sum	3	$ 36,000	ASE Allowance		$ 75			
									$ 75			
	Suction Hader, 4.5 ft dia, 8 ft lg		$ 17,000	Lump Sum	3	$ 51,000	Richardson Sect 100-341	150	$ 75	$ 11,250	ASE Estimate	$ 62,250
									$ 75			
	Insulation - see piping section								$ 75			
						$ -			$ 75	$ -		$ -
	Installation, Flash Cooler		$ 75	labor hour	200	$ 15,000	ASE Estimate		$ 75			
									$ 75			
	Installation, Suction Header		$ 75	labor hour	200	$ 15,000	ASE Estimate		$ 75			
						$ -			$ 75	$ -		$ -
	Documentation							35	$ 75	$ 2,625	See Note 2	$ 2,625
	Support for Integrated Tests							18	$ 75	$ 1,350	See Note 3	$ 1,350
	Support for Operational Validation Tests							18	$ 75	$ 1,350	See Note 4	$ 1,350
	TOTAL					**$ 237,000**		**421**		**$ 31,575**		**$ 202,575**

NOTES:

1	Hourly Engineering Labor Cost =	$75	
2	Documentation	10%	of Engineering Design Cost
3	Support for Integrated Tests	5%	of Engineering Design Cost
4	Support for Operational Validation Tests	5%	of Engineering Design Cost
5	ASE estimates based on Design, Specification and / or Supply of similar equipment		

ASE Construction Estimate
Work Package 13 -- Condensors and Economizers

			Equipment or Material (Installed)					Engineering				
Ref.	Description	Tag Number	Cost Per Unit	Unit Measure	Quantity	Total Cost	Basis for Estimate	Hours	Per Unit	Total	Basis for Estimate	Total Costs
	Condensors, 2.5 ft dia, 6.5 ft lg		$ 17,000	Lump Sum	8	$ 136,000	Sim to TEI quote Q4434JRO	100	$ 75	$ 7,500	ASE Estimate	$ 143,500
						$ -			$ 75	$ -		$ -
	Economizer, 3.25 ft dia, 7 ft lg		$ 30,000		3	$ 90,000		200	$ 75	$ 15,000	ASE Estimate	$ 105,000
						$ -			$ 75	$ -		$ -
	Insualtion of Economizers - see piping section								$ 75			
						$ -			$ 75	$ -		$ -
	Installation					$ -			$ 75	$ -		$ -
						$ -			$ 75	$ -		$ -
	Condensors		$ 75	labor hour	600	$ 45,000	ASE Estimate		$ 75	$ -		$ 45,000
						$ -			$ 75	$ -		$ -
	Economizer		$ 75	labor hour	80	$ 6,000	ASE Estimate		$ 75	$ -		$ 6,000
						$ -			$ 75	$ -		$ -
						$ -			$ 75	$ -		$ -
	Documentation							30	$ 75	$ 2,250	See Note 2	$ 2,250
	Support for Integrated Tests							15	$ 75	$ 1,125	See Note 3	$ 1,125
	Support for Operational Validation Tests							15	$ 75	$ 1,125	See Note 4	$ 1,125
	TOTAL					**$ 277,000**		**360**		**$ 27,000**		**$ 304,000**

NOTES:

1	Hourly Engineering Labor Cost =	$75	
2	Documentation	10%	of Engineering Design Cost
3	Support for Integrated Tests	5%	of Engineering Design Cost
4	Support for Operational Validation Tests	5%	of Engineering Design Cost
5	ASE estimates based on Design, Specification and / or Supply of similar equipment		

ASE Construction Estimate
Work Package 14 -- Receiver

			Equipment or Material (Installed)					Engineering				
Ref.	Description	Tag Number	Cost Per Unit	Unit Measure	Quantity	Total Cost	Basis for Estimate	Hours	Per Unit	Total	Basis for Estimate	Total Costs
	Receiever, 8 ft dia, 16 ft lg		$ 27,000	Lump Sum	3	$ 81,000	Richardson Sect 100-341	200	$ 75	$ 15,000	ASE Estimate	$ 96,000
									$ 75			
	Installation		$ 75	labor hour	80	$ 6,000	ASE Estimate		$ 75			
						$ -			$ 75	$ -		$ -
						$ -			$ 75	$ -		$ -
	Documentation							60	$ 75	$ 4,500	See Note 2	$ 4,500
	Support for Integrated Tests							30	$ 75	$ 2,250	See Note 3	$ 2,250
	Support for Operational Validation Tests							30	$ 75	$ 2,250	See Note 4	$ 2,250
	TOTAL					**$ 87,000**		**320**		**$ 24,000**		**$ 105,000**

NOTES:

1	Hourly Engineering Labor Cost =	$75	
2	Documentation	10%	of Engineering Design Cost
3	Support for Integrated Tests	5%	of Engineering Design Cost
4	Support for Operational Validation Tests	5%	of Engineering Design Cost
5	ASE estimates based on Design, Specification and / or Supply of similar equipment		

ASE Construction Estimate
Work Package 18 -- Pumps

			Equipment or Material (Installed)					Engineering				
Ref.	Description	Tag Number	Cost Per Unit	Unit Measure	Quantity	Total Cost	Basis for Estimate	Hours	Per Unit	Total	Basis for Estimate	Total Costs
						$ -			$ 75	$ -		$ -
	Material/Equipment:					$ -			$ 75	$ -		$ -
	Pump, 300 gpm, 20 hp, Main		$ 3,800	Lump Sum	3	$ 11,400	Richardson 100-280	40	$ 75	$ 3,000		$ 14,400
	Pumpdown Compressor		$ 2,000	Lump Sum	3	$ 6,000	Richardson 100-280	30	$ 75	$ 2,250		$ 8,250
									$ 75			
	Installation, Main Pump		$ 75	labor hour	60	$ 4,500	Richardson 100-280		$ 75			
	Installation, Pumpdown Comp		$ 75	labor hour	40	$ 3,000	Richardson 100-280		$ 75			
									$ 75			
	Documentation							4	$ 75	$ 300	See Note 2	$ 300
	Support for Integrated Tests							2	$ 75	$ 150	See Note 3	$ 150
	Support for Operational Validation Tests							2	$ 75	$ 150	See Note 4	$ 150
	TOTAL					**$ 24,900**		**78**		**$ 3,600**		**$ 23,250**

NOTES:

1	Hourly Engineering Labor Cost =	$75	
2	Documentation	10%	of Engineering Design Cost
3	Support for Integrated Tests	5%	of Engineering Design Cost
4	Support for Operational Validation Tests	5%	of Engineering Design Cost
5	ASE estimates based on Design, Specification and / or Supply of similar equipment		
6	Sheet WP7 -- Details: Costs from Richardson cost estimating manual (2002) increased by factor of 1.4 to account for: a) steel price increases, and b) limited quantities and other relevant factors per Richardson manual		

ASE Construction Estimate
Work Package 21 -- New Building, Site and Foundations

			Equipment or Material (Installed)					Engineering				
Ref.	Description	Tag Number	Cost Per Unit	Unit Measure	Quantity	Total Cost	Basis for Estimate	Hours	Per Unit	Total	Basis for Estimate	Total Costs
	New Compressor Building		$ 150	s.f.	16800	$ 2,520,000	Cost per S.f. of similar bdg's	2200	$ 75	$ 165,000	Preliminary figure pending Protel estimate	$ 2,685,000
	Civil - Site Work		$ 500,000	l.s.	1	$ 500,000			$ 75	$ -		$ 500,000
	Evironmental - Site Clean-up		$ 105,000	l.s.	1	$ 105,000			$ 75	$ -		$ 105,000
									$ 75	$ -		$ -
									$ 75	$ -		$ -
									$ 75	$ -		$ -
									$ 75	$ -		$ -
									$ 75	$ -		$ -
									$ 75	$ -		$ -
									$ 75	$ -		$ -
									$ 75	$ -		$ -
						$ -			$ 75	$ -		$ -
						$ -			$ 75	$ -		$ -
						$ -			$ 75	$ -		$ -
						$ -			$ 75	$ -		$ -
	Documentation							220	$ 75	$ 16,500	See Note 2	$ 16,500
	Support for Integrated Tests							110	$ 75	$ 8,250	See Note 3	$ 8,250
	Support for Operational Validation Tests							110	$ 75	$ 8,250	See Note 4	$ 8,250
	TOTAL					**$ 3,125,000**		**2640**		**$ 198,000**		**$ 3,323,000**

NOTES:

1 Hourly Engineering Labor Cost = $75
2 Documentation 10% of Engineering Design Cost
3 Support for Integrated Tests 5% of Engineering Design Cost
4 Support for Operational Validation Tests 5% of Engineering Design Cost
5 Estimates based on Richardson estimating manual include lighting, electrical outlets, HVAC, finishes, etc. for typical industrial buildings
6 ASE estimates based on Design, Specification and / or Supply of similar equipment (Sheet WP1 -- Details)

IRT Construction Schedule																
ASE - Bob Week																
4-Apr-07																
Option/Tasks						**MONTHS**										
	1	**2**	**3**	**4**	**5**	**6**	**7**	**8**	**9**	**10**	**11**	**12**	**13**	**14**	**15**	**16**
Option 2 (New Building)																
New Building with Footings for Equipmment																
Order Major Equipment (Comp & Vessels)																
Install Major Equipment																
Shop Fab Piping																
Install Building Piping																
Remove Existing HX Piping																
Install HX Piping																
Checkout and Commissioning																
Downtime																
Option 2 (Existing Building)																
Remove Existing Equipment/Piping																
Modify Building (Mtg beams & penetrations)																
Order Major Equipment (Comp & Vessels)																
Install Major Equipment																
Shop Fab Piping																
Install Building Piping																
Remove Existing HX Piping																
Install HX Piping																
Checkout and Commissioning																
Downtime																

R-507

Temperature, F	Pressure, psig
-60	5.3 ("Hg Vac)
-55	1.7 ("Hg Vac)
-50	1.1
-45	3.3
-40	5.7
-35	8.4
-30	11.3
-25	14.5
-20	18.0
-15	21.8
-10	26.0
-5	30.5
0	35.4
5	40.6
10	46.3
15	52.4
20	58.9
25	65.9
30	73.4
35	81.4
40	90.0
45	99.1
50	108.8
55	119.1
60	130.0
65	141.6
70	153.8
75	166.8
80	180.4
85	194.9
90	210.1
95	226.1
100	243.0
105	260.8
110	279.5
115	299.1
120	319.7
125	341.4
130	364.1
135	388.1
140	413.2
145	439.6
150	467.4

Honeywell Genetron® AZ-50 & 404A

Properties, Uses, Storage, and Handling

Honeywell

Honeywell Genetron® AZ-50 & 404A Properties, Uses, Storage, and Handling

Table of Contents

Introduction 3

Applications 3

AZ-50 Physical Properties 3

404A Physical Properties 4

AZ-50 Pressure vs. Temperature (English Units & SI Units) 4

404A Pressure vs. Temperature (English Units & SI Units) 5

AZ-50 and 404A Refrigeration Grade Specifications 5

Performance Data (English Units & SI Units) 5

Genetron 404A vs. Genetron 507 6

Lubricants 6

Miscibility in Lubricants 6

Miscibility Genetron AZ-50 or Genetron 404A and Polyol Ester Lubricant 6

Stability with Metals 6

Stability of Genetron AZ-50 with Polyol Ester Lubricants and Metals 7

Chlorinated Materials and Refrigerants 7

Genetron AZ-50 or Genetron 404A Mixtures with R-502 7

Equipment 7

Compatibility: Plastics and Elastomers 7

Desiccants 8

Solubility of Water in Genetron AZ-50 8

Safety 8

Toxicity 8

Inhalation 8

Skin and Eye Contact 8

Leaks 8

Flammability 8

Combustibility 8

Thermal Stability 9

Storage and Handling 9

Maintenance 9

Leak Detection 10

Environmental Considerations 10

Reclamation 11

Retrofitting 11

Long-term vs. Interim Replacements 11

Retrofit Lubricants 11

Retrofit Procedures 11

Packaging 11

Technical Assistance 11

Available Literature 11

Thermodynamic Tables (English Units & SI Units) 12–19

Introduction

Genetron® AZ-50® refrigerant (an azeotropic mixture of HFC-125 and HFC-143a, assigned R-507 by ASHRAE) was developed by Honeywell to serve as a long-term substitute for the refrigerant R-502. This patented, environmentally safe, non-ozone-depleting substitute possesses similar energy efficiency and capacity characteristics to R-502 and has an intrinsically low toxicity. Genetron AZ-50 has higher energy efficiency than other R-502 alternatives, due in part to superior heat transfer characteristics. Genetron AZ-50 is an excellent refrigerant choice for low- and medium-temperature refrigeration applications.

Genetron® 404A is a refrigerant blend made up of HFC-125, HFC-143a, and HFC-134a and assigned the refrigerant number R-404A by ASHRAE. Like Genetron AZ-50, Genetron 404A is a non-ozone-depleting long-term alternative to R-502 that is well suited for low- and medium-temperature refrigeration applications.

Applications

In commercial refrigeration, Genetron AZ-50 and Genetron 404A serve a wide range of applications including supermarket freezer cases, reach-in coolers, display cases, transport refrigeration, and ice machines. These refrigerants may also be used to replace R-502 in a number of specialty applications.

Genetron AZ-50 and Genetron 404A are suitable for both new equipment and retrofitting existing R-502 commercial refrigeration systems. Generally, there will be few, if any, equipment changes necessary to optimize the performance of Genetron AZ-50 or Genetron 404A refrigerants in these applications. For retrofitting commercial systems, refer to bulletin G525-100, Genetron Refrigeration Retrofit Guidelines.

Physical Properties AZ-50

Chemical Name		Pentafluoroethane/ 1,1,1-Trifluoroethane
Appearance		Clear, colorless gas with a faint ethereal odor
Molecular Formula (composition, wt%)		CHF_2CF_3 (50%) CH_3CF_3 (50%)
Molecular Weight		98.9
Boiling Point	@ 1 ATM @ 1.01 bar	-52.1°F -46.8°C
Freezing Point Range	@ 1 ATM @ 1.01 bar	-177.7 to -181.3 °F -116.5 to 118.5 °C
Critical Temperature*		159.11°F 70.617°C
Critical Pressure*		537.37 (Psia) 3705 (kPa)
Critical Volume*		0.0326 (ft^3/lb) 0.002 (m^3/kg)
Critical Density*		30.637 (lb/ft^3) 490.77 (kg/m^3)
Vapor Density at boiling point		0.3487 (lb/ft^3) 5.585 (kg/m^3)
Liquid Density		65.42 (lb/ft^3) 1048.0 (kg/m^3)
Liquid Heat Capacity at constant pressure		0.37 (Btu/lb•°F) 1.54 (kJ/kg•K)
Vapor Heat Capacity at constant pressure		
	@ 1 ATM @ 1.01 bar	0.208 (Btu/lb•°F) 0.8700 (kJ/kg•K)
Heat of Vaporization at boiling point		84.72 (Btu/lb) 196.95 (kJ/kg)
Vapor Pressure		186.02 (Psia) 1283 (kPa)
Liquid Thermal Conductivity		0.0369 (Btu/hr•ft•°F) 0.0639 (W/m•K)
Vapor Thermal Conductivity		0.0104 (Btu/hr•ft•°F) 0.0180 (W/m•K)
Liquid Viscosity		0.3087 (lb_m/ft•hr) 127.6 (µPa•s)
Vapor Viscosity		0.0353 (lb_m/ft•hr) 14.58 (µPa•s)
% Volatiles by volume		100
Flammability Limits in Air @ 1 ATM (vol. %)		None
Ozone Depletion Potential (ODP)		0.00
ASHRAE Safety Group Classification		A1

* NIST Refprop 7

Note: All measurements are at 77° (25°C) unless otherwise noted.

Physical Properties 404A

Chemical Name	Pentafluoroethane/ 1,1,1-Trifluoroethane/ 1,1,1,2-Tetrafluoroethane
Appearance	Clear, colorless gas with a faint ethereal odor
Molecular Formula (composition, wt %)	CHF_2CF_3 (44%) CH_3CF_3 (52%) CH_2FCF_3 (4%)
Molecular Weight	97.6
Boiling Point @ 1 ATM @ 1.01 bar	-51.2°F -46.2°C
Freezing Point Range @ 1 ATM @ 1.01 bar	 Not Measured Not Measured
Critical Temperature* 72.046°C	161.68°F
Critical Pressure*	540.82 (Psia) 3728.9 (kPa)
Critical Volume*	0.0329 (ft^3/lb) 0.002 (m^3/kg)
Critical Density*	30.373 (lb/ft^3) 486.53 (kg/m^3)
Vapor Density at boiling point	0.3423 (lb/ft^3) 5.48 (kg/m^3)
Liquid Density	65.18 (lb/ft^3) 1044 (kg/m^3)
Liquid Heat Capacity at constant pressure	 0.37 (Btu/lb•°F) 1.54 (kJ/kg•K)
Vapor Heat Capacity at constant pressure @ 1 ATM @ 1.01 bar	 0.210 (Btu/lb•°F) 0.8773 (kJ/kg•K)
Heat of Vaporization at boiling point	86.45 (Btu/lb) 200.94 (kJ/kg)
Vapor Pressure	165.3 (Psia) 1241 (kPa)
Liquid Thermal Conductivity	0.0375 (Btu/hr•ft•°F) 0.0649 (W/m•K)
Vapor Thermal Conductivity	0.0104 (Btu/hr•ft•°F) 0.0180 (W/m•K)
Liquid Viscosity	0.3130 (lb_m/ft•hr) 129.3 (µPa•s)
Vapor Viscosity	0.0349 (lb_m/ft•hr) 14.41 (µPa•s)
% Volatiles by volume	100
Flammability Limits in Air @ 1 ATM (vol. %)	 None
Ozone Depletion Potential (ODP)	0
ASHRAE Safety Group Classification	A1

* NIST Refprop 7

Note: All measurements are at 77° (25°C) unless otherwise noted.

AZ-50 Pressure vs. Temperature

Temp. (°F)	Pressure (psig)	Temp. (°C)	Pressure bar-gauge
-60	5.8 *	-50	-0.15
-55	2.2 *	-47.5	-0.03
-50	0.9	-45	0.09
-45	3.0	-42.5	0.23
-40	5.4	-40	0.38
-35	8.1	-37.5	0.54
-30	11.0	-35	0.72
-25	14.1	-32.5	0.91
-20	17.6	-30	1.12
-15	21.4	-27.5	1.35
-10	25.5	-25	1.59
-5	30.0	-22.5	1.85
0	34.8	-20	2.14
5	40.0	-17.5	2.44
10	45.7	-15	2.76
15	51.7	-12.5	3.11
20	58.2	-10	3.49
25	65.2	-7.5	3.88
30	72.7	-5	4.31
35	80.7	-2.5	4.76
40	89.2	0	5.23
45	98.3	2.5	5.74
50	107.9	5	6.28
55	118.2	7.5	6.85
60	129.1	10	7.45
65	140.6	12.5	8.09
70	152.8	15	8.76
75	165.8	17.5	9.46
80	179.5	20	10.21
85	193.9	22.5	10.99
90	209.1	25	11.82
95	225.2	27.5	12.68
100	242.1	30	13.59
105	259.9	32.5	14.54
110	278.6	35	15.54
115	298.3	37.5	16.59
120	318.9	40	17.69
125	340.7	42.5	18.83
130	363.5	45	20.03
135	387.5	47.5	21.29
140	412.7	50	22.60
145	439.2	52.5	23.97
150	467.2	55	25.41
		57.5	26.91
		60	28.48
		62.5	30.12
		65	31.84

* "Hg Vac

404A Pressure vs. Temperature

Temp. (°F)	Bubble Pressure (psig)	Dew Pressure (psig)	Temp. (°C)	Bubble Pressure bar-gauge	Dew Pressure bar-gauge
-60.0	6.4 *	7.3 *	-50	-0.17	-0.20
-55.0	2.9 *	3.9 *	-47.5	-0.06	-0.09
-50.0	0.5	0.1 *	-45	0.06	0.03
-45.0	2.6	2.0	-42.5	0.20	0.16
-40.0	4.9	4.3	-40	0.34	0.30
-35.0	7.5	6.8	-37.5	0.50	0.46
-30.0	10.3	9.6	-35	0.68	0.63
-25.0	13.4	12.7	-32.5	0.86	0.81
-20.0	16.8	16.0	-30	1.07	1.01
-15.0	20.5	19.7	-27.5	1.29	1.23
-10.0	24.6	23.6	-25	1.53	1.47
-5.0	28.9	27.9	-22.5	1.78	1.72
0.0	33.7	32.6	-20	2.06	1.99
5.0	38.8	37.7	-17.5	2.36	2.29
10.0	44.3	43.1	-15	2.68	2.60
15.0	50.2	49.0	-12.5	3.02	2.94
20.0	56.6	55.3	-10	3.38	3.30
25.0	63.4	62.1	-7.5	3.77	3.68
30.0	70.7	69.3	-5	4.18	4.09
35.0	78.6	77.1	-2.5	4.62	4.53
40.0	86.9	85.4	0	5.09	4.99
45.0	95.8	94.2	2.5	5.59	5.49
50.0	105.3	103.6	5	6.11	6.01
55.0	115.3	113.6	7.5	6.67	6.56
60.0	126.0	124.2	10	7.26	7.15
65.0	137.3	135.5	12.5	7.88	7.77
70.0	149.3	147.4	15	8.54	8.42
75.0	162.0	160.1	17.5	9.23	9.11
80.0	175.4	173.4	20	9.96	9.83
85.0	189.5	187.5	22.5	10.73	10.60
90.0	204.5	202.4	25	11.54	11.40
95.0	220.2	218.1	27.5	12.38	12.25
100.0	236.8	234.6	30	13.27	13.13
105.0	254.2	252.1	32.5	14.21	14.06
110.0	272.5	270.4	35	15.19	15.04
115.0	291.8	289.6	37.5	16.21	16.06
120.0	312.1	309.9	40	17.28	17.14
125.0	333.3	331.2	42.5	18.41	18.26
130.0	355.6	353.5	45	19.58	19.43
135.0	379.1	377.0	47.5	20.81	20.66
140.0	403.7	401.7	50	22.10	21.95
145.0	429.6	427.7	52.5	23.44	23.29
150.0	456.8	455.1	55	24.84	24.70
			57.5	26.31	26.16
			60	27.84	27.70
			62.5	29.44	29.31
			65	31.12	30.99

AZ-50 and 404A Refrigeration Grade Specifications

AZ-50 Assay (min. wt. % of all Fluorocarbons)	99.5
404A Assay (min. wt. % of all Fluorocarbons)	99.7
Moisture (max. wt. %)	0.0010
High-boiling Residue (max. vol. %)	0.01
Chloride (max. wt. %)	0.0001
Total Acidity (max. wt. %)	0.0001
Non-Condensibles in Vapor Phase (max. vol. %)	1.5

Performance Data

	Genetron AZ-50	R-502	R-404A
Evaporating Pressure			
psig	40.6	35.4	38.7
bar-gauge	2.80	2.44	26.7
Condensing Pressure			
psig	197.8	176.3	192.1
bar-gauge	13.64	12.15	13.25
Compression Ratio			
	3.84	3.81	3.87
	3.85	3.82	3.88
Compressor Discharge Temperature			
°F	94.9	99.7	96.19
°C	35.0	37.6	35.7
Temperature of Suction Gas			
°F	5.0	5.0	5.0
°C	-15.0	-15.0	-15.0
Specific Volume of Suction Vapor			
ft^3/lb	0.81	0.81	0.86
m^3/kg	0.051	0.051	0.054
Latent Heat of Vaporization			
Btu/lb	74.8	67.4	76.4
kJ/kg	173.9	156.7	177.7
Net Refrigeration Effect			
Btu/lb	47.4	45.5	49.3
kJ/kg	110.4	106.0	114.5
Coefficient of Performance (C.O.P.)	4.19	4.39	4.23
Horsepower per ton of Refrigeration	1.13	1.07	1.11
Refrigerant Circulated			
per ton (lb/min)	4.22	4.39	4.06
per kW (g/s)	9.05	9.44	8.74
Compressor Suction Gas Volume			
per ton (ft^3/min)	3.42	3.55	3.48
per kW (l/s)	0.46	0.48	0.47
Liquid Circulated			
per ton (in^3/min)	114.1	102.0	109.8
per kW (mL/s)	8.87	8.03	8.56

English Units: The data above indicates performance at Standard Ton Conditions (5°F evaporating and 86°F condensing). 100% isentropic efficiency.

SI Units: The data above at cooling load=1kW (-15°C evaporating and 30°C condensing)

Genetron® 404A vs. Genetron 507

Although Genetron® AZ-50® and Genetron 404A can be used in the same applications, there are some differences between the two refrigerants that may influence product selection.

– AZ-50 is an azeotrope demonstrating 0.1°F or less temperature glide.

– R-404A is a blend and must be liquid charged using a throttling device in the manifold hose.

– **Thermodynamic capacity:** R-507 is slightly higher than R-404A.

– **System capacity:** R-507 typically about 3% higher than R-404A.

– **Compressor efficiency:** R-507 is 1-2% higher than R-404A.

– **System efficiency:** R-507 is about 3-4% higher than R-404A. Field test data has ranged from 2-7%.

– The refrigerant-side heat transfer coefficient is higher for R-507 than R-404A. The presence of R-134a in R-404A increases mass transfer resistance that results in a decline in heat transfer.

Lubricants

Compressor lubricants used must be miscible with Genetron AZ-50 and Genetron 404A. Polyol ester lubricants are most commonly used. Most compressor manufacturers recommend specific polyol ester lubricants. Check with the equipment manufacturer for the recommended lubricants for their system.

Miscibility in Lubricants

Polyol ester lubricants are available in a wide viscosity range from as low as 15 centistokes (cs) to more than 220 cs at 104°F (40°C). Their range of miscibility with Genetron AZ-50 or Genetron 404A can vary widely. Miscibility is the ability of the refrigerant/lubricant mixture to form a single liquid phase.

Many commercial polyol esters provide miscibility with Genetron AZ-50 and Genetron 404A down to low temperatures. As shown in the following figure, the miscibility curve for Genetron AZ-50 or Genetron 404A with polyol ester lubricant is often concave. The refrigerant/lubricant mixture is miscible at low temperatures and becomes immiscible at higher temperatures. These mixtures exhibit lower critical solution temperatures. The lower critical solution temperature is the temperature below which the refrigerant mixtures remain miscible over the entire concentration range.

Miscibility Genetron AZ-50 or Genetron 404A and Polyol Ester Lubricant

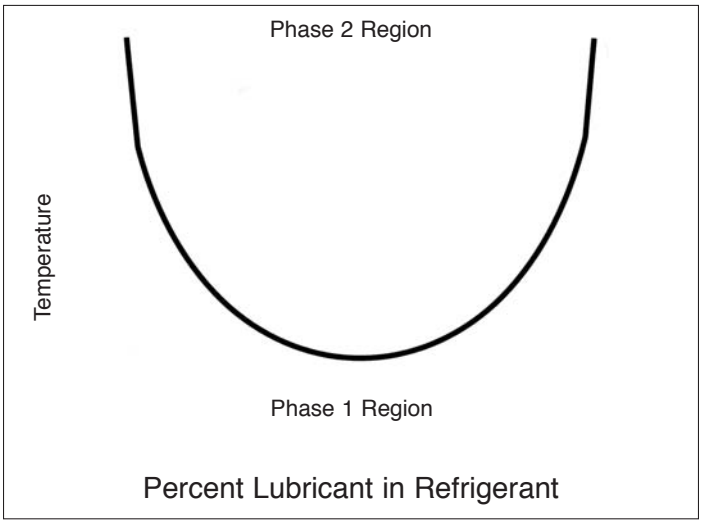

Stability with Metals

The stability of Genetron AZ-50 and Genetron 404A is very good for virtually all applications where R-502 is suitable. Genetron AZ-50 and Genetron 404A are compatible with steel, copper, aluminum and brass.

The stability of refrigerant/lubricant mixtures was determined for Genetron AZ-50 using the ASHRAE 97 sealed-tube method. Studies were conducted using sealed tubes of Genetron AZ-50 with polyol ester lubricants in the presence of three metal coupons (valve steel, copper and aluminum) for 14 days at 400°F (204°C). The stability was evaluated through both visual observation and measurement of the fluoride concentration produced in the tube.

On the basis of several tests, it is clear that Genetron AZ-50 is stable with polyol esters. A typical example of such tests is shown in the following table. Copper, steel and aluminum are stable with Genetron AZ-50 and the polyol esters studied. The stability of the refrigerant, as shown by the fluoride produced and the purity of the Genetron AZ-50 determined by chromatographic analysis, is excellent.

Genetron 404A is made up of the components HFC-125, HFC-143a and HFC-134a. The stability of Genetron 404A can be characterized based on the stability of its refrigerant components, in this case, by the known stability of Genetron AZ-50 and Genetron 134a.

Stability of Genetron® AZ-50® with Polyol Ester Lubricants and Metals

Lubricant	Lubricant Appearance	Copper	Aluminum	Steel	Fluoride (µS)	AZ-50 Purity
Mobil EAL 22	N.C.	N.C.	N.C.	Very light copper color for the portion immersed in the liquid.	12	N.C.
Mobil EAL 32	N.C.	N.C.	N.C.	N.C.	<10	N.C.
Castrol SW 32	N.C.	N.C.	N.C.	Slight black spots in the vapor phase region. Portion immersed in liquid is unchanged.	13	N.C.

*N.C. = No Change
Note: Test performed at 400°F (204°C) for 14 days

Chlorinated Materials and Refrigerants

There are three situations in which Genetron AZ-50 or Genetron 404A and compressor lubricants may come into contact with chlorinated materials. These instances are:

1. A chlorinated solvent is used to clean or flush the system.
2. A system is retrofitted from R-502, or
3. R-502 is accidentally charged into a system that contains Genetron AZ-50 or Genetron 404A.

It is recommended that chlorinated materials not be introduced into systems that used Genetron AZ-50 or Genetron 404A with polyol ester lubricants. While performing retrofits, the service technician should follow appropriate retrofit guidelines to help assure that residual chlorinated compounds are minimized. Genetron AZ-50 or Genetron 404A alone is chemically compatible with chlorinated materials. However, the polyol ester lubricants used can be incompatible with chlorinated materials. Chlorinated materials should not be introduced in to Genetron AZ-50 or Genetron 404A systems that use polyol ester lubricants without prior consultation with the equipment manufacturer.

Genetron AZ-50 or Genetron 404A Mixtures with R-502

The mixing of Genetron AZ-50 or Genetron 404A with R-502 should be avoided. The HFC-125 in Genetron AZ-50 or Genetron 404A can form an azeotrope with the CFC-115 component in R-502. Separation of HFC-125, HFC-143a, CFC-115, and HCFC-22 becomes difficult as a result. This will make recycling and reclamation very difficult or expensive, especially if it is desired to recover the original products.

Equipment

Compatibility: Plastics and Elastomers

Honeywell, in conjunction with the leading OEMs, has conducted materials testing to evaluate the compatibility of Genetron AZ-50 with materials used in refrigerant applications. The following list is a condensed sampling of the testing that has been performed to date. The information on this list is a first-level ranking of the compatibility of the materials. (Note: the compatibility of any specific material will be dependent on its formulation and history.) The ranking, although based on limited sampling can serve as a useful guide. Due to the similarity of Genetron® AZ-50® and Genetron 404A, the table below can also serve as a useful guide to the expected compatibility of Genetron 404A.

Materials Compatibility

Material	Genetron AZ-50	Genetron AZ-50 Polyol Ester
Ethylene-Propylene Diene terpolymer	S	S
Ethylene-Propylene copolymer	S	S
Chlorosulfonated Polyethylene	S	U
Polyisoprene	D	U
Chlorinated Polyethylene	S	U
Neoprene (Chloroprene)	S	D
Epichlorohydrin	D	U
Polyvinylidene fluoride and copolymer of vinylidene fluoride and hexafluoropropylene	U	U
Silicone	U	D
Polyurethane	D	D
Nitriles	D	D
H-NBR	D	S
Butyl rubber	D	S
Polysulfide	S	U
Nylon	S	D
Polytetrafluoroethylene	S	S
PEEK	S	S
ABS	D	U
Polypropylene	D	D
Polyphenylene sulfide	D	D
Polyethylene terephthalate	S	S
Polysulfone	S	S
Polyimide	S	D
Polyetherimide	S	S
Polyphthalamide	D	U
Polyamideimide	D	S
Acetal	S	U
Phenolic	S	D
Epoxy Laminate	S	S

Note: S: Suitable D: Suitability dependant on formulation
U: Unsuitable

In either case, rankings should be used with caution since they are judgements based on limited sampling. Customers should consult the manufacturer or do further independent testing

Desiccants

Three common types of desiccant materials are used in making driers. They are molecular sieves, alumina and silica gel. Molecular sieves XH7 and XH9 are recommended by UOP (a major molecular sieve manufacturer) for use with Genetron AZ-50. Similarly, Genetron 404A is compatible with XH7 and XH9. In addition, each drier manufacturer has developed driers and filters that are compatible with Genetron AZ-50 and Genetron 404A. Such driers can include all three types of drier materials.

Solubility of Water in Genetron AZ-50

The solubility of water in Genetron AZ-50 is shown in the graph below. The solubility of water in Genetron AZ-50 is comparable to that of water in R-502. Although not shown, the solubility of water in Genetron 404A would be comparable to that of water in Genetron AZ-50.

Solubility of Water in Genetron AZ-50

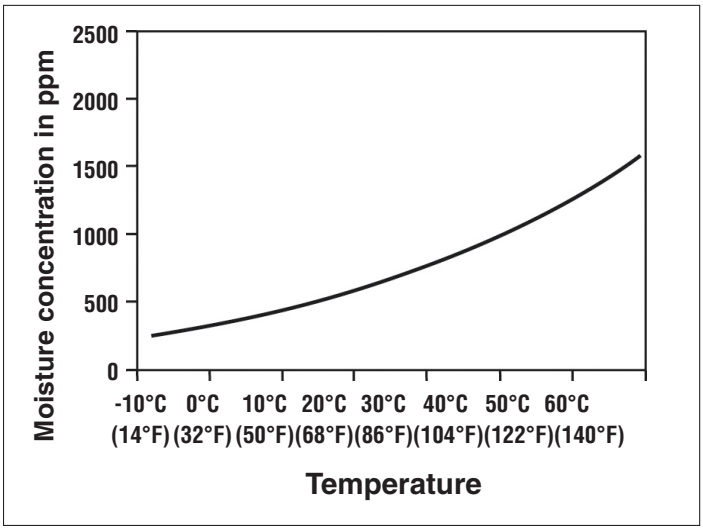

Safety

Honeywell recommends reading the MSDS before using any Genetron refrigerant. Any Genetron MSDS can be downloaded from www.genetron.com.

Toxicity

Genetron AZ-50 and Genetron 404A can be safely used in all of their intended applications based on data developed by Honeywell. This conclusion was reached after review of all toxicity results confirming the intrinsically low toxicity of these refrigerants. However, the end-user should read the Material Safety Data Sheet (MSDS) before using any Genetron refrigerant.

Inhalation

Genetron AZ-50 and Genetron 404A are of a low order of acute toxicity in animals. Vapor inhalation at high concentrations may result in asphyxiation or cardiac arrhythmia. If vapors are inhaled at high concentrations, cardiac irregularities and potentially cardiac arrest could occur. Under these circumstances, the heart may become sensitized. Do not administer adrenaline (epinephrine) if over-exposure to Genetron AZ-50 or Genetron 404A is suspected. These refrigerants are heavier than air and may displace oxygen. When concentrations of Genetron AZ-50 or Genetron 404A in air reach levels that reduce oxygen content to 14-16% by volume, symptoms of asphyxiation will occur. An individual exposed to high concentrations of Genetron AZ-50 or Genetron 404A must be given medical attention immediately. As with most refrigerants, adequate ventilation must be provided at all times.

Skin and Eye Contact

Genetron AZ-50 and Genetron 404A vapors have little or no effect on the skin and eyes. In liquid form, they can freeze skin or eyes on contact. If contact with the skin should occur, flush the exposed area with lukewarm water for 15 minutes to ensure the chemical is removed. If there is evidence of frostbite, soak affected area in lukewarm water. If contact with the eyes should occur, immediately flush with large amounts of lukewarm water for at least 15 minutes, occasionally lifting the eyelid to facilitate the flushing process. Seek medical attention immediately.

Leaks

Should a release of Genetron AZ-50 or Genetron 404A occur, the area must be evacuated immediately. Protected personnel should de-energize or remove any ignition sources and address the leak, if without risk. Vapors may concentrate near the floor, displacing available oxygen. Once the area is evacuated, it must be ventilated with blowers or fans to circulated the air at floor level. Unprotected personnel should not be allowed to return to the area until the air has been tested and determined safe.

Flammability

As defined by the U.S. Department of Transportation (DOT) regulations, flash point determinations do not apply to Genetron® AZ-50® and Genetron 404A. These refrigerants have no flame limits and DOT considers them non-flammable (Green Label). Underwriters' Laboratories® (UL) recognizes Genetron AZ-50 and Genetron 404A as practically non-flammable. According to ASHRAE Standard 34, Genetron AZ-50 and Genetron 404A are classified in Safety Group A1. Since these refrigerants do not have flash points and are non-flammable, Honeywell believes that standard industrial-type electrical installations may be used. It is essential to review and comply with all local building codes and other applicable regulations and laws when using Genetron AZ-50 or Genetron 404A.

Combustibility

Genetron AZ-50 and Genetron 404A are HFC refrigerants and are non-flammable at ambient temperatures and atmospheric

pressures. However, when mixed with air, HFCs can be combustible at higher pressures and temperatures. Because of this combustibility potential under pressure, Genetron AZ-50 or Genetron 404A and air should never be mixed in tanks or supply lines, or allowed to accumulate in storage tanks. Leak checking should never be done with mixtures of HFC refrigerants and air. Leak checking can be performed safely with a mixture of refrigerant and dry nitrogen. Anyone using or handling these refrigerants should first carefully review the Material Safety Data Sheet (MSDS).

Thermal Stability

Genetron AZ-50 and Genetron 404A are stable under normal operating conditions; however, it is important to avoid exposing these refrigerants to very high temperatures. When exposed to high temperatures, such as those found in flames or red-hot surfaces, the materials can decompose to produce toxic and corrosive compounds. Pungent odors released will irritate the nose and throat and generally force evacuation of the area. Contact with certain red-hot metals may result in exothermic or explosive reactions. Specific materials to avoid include freshly abraded aluminum surfaces and active metals such as sodium, potassium, aluminum, magnesium and zinc.

Storage and Handling

An important handling practice that must be followed for Genetron 404A is to ensure that all transfers be executed by using liquid charging instead of vapor charging. This practice will help minimize compositional changes.

Genetron AZ-50 and Genetron 404A cylinders must be clearly marked and kept in a cool, dry and properly ventilated storage area away from heat, flames, corrosive chemicals, fumes, explosives and be otherwise protected from damage. Disposable Jugs™ should be discarded in an environmentally safe manner in accordance with all laws and regulations.

Empty cylinders should be returned to Honeywell or your Genetron Wholesaler. Under no circumstance should anything be put into the empty cylinder. Prior to disposal, cylinder contents should be recovered to an internal pressure of 0 psig or less. Once empty, properly close the cylinder valve and replace the valve cap.

Keep cylinders out of direct sunlight, especially in warm weather.

Genetron AZ-50 and Genetron 404A liquid expand significantly when heated, reducing the amount of vapor space left in the cylinder. Once the cylinder becomes liquid-full, any further rise in temperature can cause it to burst, potentially resulting in serious personal injury.

NEVER ALLOW A CYLINDER TO GET WARMER THAN 125°F (55°C).

Always store cylinders above dirt or damp floors to prevent rusting, using a platform or parallel rails. SECURE CYLINDERS IN PLACE BY MEANS OF A RACK,CHAIN OR ROPE TO PREVENT THEM FROM TIPPING, FALLING, ROLLING OR ACCIDENTALLY STRIKING EACH OTHER OR ANY OTHER OBJECT. If the cylinder valve is broken off, rapid escape of the high-pressure contents will propel the cylinder, which could potentially result in serious injury. Keep cylinder caps in place until the cylinder is in use.

The storage area should be away from corrosive chemicals or fumes to avoid damaging effects on the cylinder and threaded areas of the valve. Follow similar precautions for bulk storage and transport systems, ensuring that proper design and operation satisfies the required pressure rating and also avoids external corrosive conditions, overheating or overfilling.

Maintenance

A thorough pre-job review must be done to determine the respiratory protection requirements, as well as any other safety equipment needed. Maintenance in areas where Genetron® AZ-50® or Genetron 404A has accumulated should be performed only after confirming that work area concentrations are below the permissible exposure level (PEL). This may be determined using a vapor-in-air analyzer capable of measuring the amount of airborne Genetron AZ-50 or Genetron 404A. These vapors are heavier than air and can accumulate at floor level. When vapor concentrations are above the PEL, the area should be ventilated to reduce the vapor concentration to below the PEL before entry. Ventilate the area using fans and other air movers as necessary. If entry must be made to areas where vapor concentrations are above the PEL, appropriate respiratory protection should be used.

Federal occupational health and safety agencies often have legal requirements and guidelines for proper selection and use of respiratory protection. It is often the responsibility of the employer to ensure the safety of the employees performing the maintenance. Be sure to comply with applicable laws and guidelines for proper selection and use of respiratory protection. If the airborne concentration of refrigerant is unknown or at a particular threshold, the law may require the use of supplied air respirators. Particular work team and work zone entry procedures may also apply.

Vessels, containers, transfer lines, pumps and other equipment should not be exposed to high-temperature sources (such as welding, brazing and open flames) until they have been thoroughly cleaned and found free of vapors. Exposure to these circumstances can cause fire, explosion and decomposition of

refrigerant. This may result in the formation of toxic or corrosive compounds. Potential sources for further vapor releases should also be eliminated if possible.

When possible, maintenance or cleaning of equipment should be performed without entering the vessel. A tank or storage vessel may be a confined space. These spaces may have a configuration that can hinder activities and/or expose personnel to the risk of physical injury from entrapment, engulfment, or hazardous atmospheres. Depending on conditions and applicable regulations, a permit may be required to enter such vessels. If a tank must be entered, personnel should be required to use a formal tank entry procedure based on recognized safety principles and comply with all applicable regulations. The procedure would provide guidance for critical items such as but not limited to respiratory protection, safety equipment, work practice, and communication. Among the possible requirements of these procedures is the use of a fully qualified work team and placement of a confined space entry permit at the job site.

Leak Detection

Use leak detectors for pinpointing leaks or for monitoring an entire room on a continual basis.

Leak detectors are important for refrigerant conservation, equipment protection and performance, reduction of environmental impact, and protection of those coming in contact with the system. There are two types of leak detection systems — leak pinpointing and area monitoring. Before purchasing either type, several equipment factors should be considered, including detection limits, sensitivity, and selectivity. Regarding selectivity, there are three categories: non-selective, halogen-selective, and compound selective. In general, complexity and cost of a leak detector increase as the specificity increases. A fluorescent dye compatible with the refrigerant and lubricant may also be used in conjunction with an ultraviolet lamp to pinpoint leaks.

New installations should be checked for leaks prior to complete charging. Whenever a leak inspection is performed, check all factory and field joints throughout the system. For a system that has been in operation for some time, check for oil at joints and connections, as this may serve as an indication of a refrigerant leak at that location. This approach would not commonly be considered when leak checking a new system installation since it is much less likely that oil will have found its way to the leak. If a system has lost all or most of its refrigerant charge, the system must be pressurized to about 150 psig in order to perform a leak check. Pressure can be restored for leak checking by adding Genetron® AZ-50® or Genetron 404A using normal charging procedures or by using dry nitrogen. DO NOT USE AIR TO LEAK CHECK THE SYSTEM. At pressures above atmospheric, mixtures of air and any HCFC or HFC refrigerant will become combustible. For a system containing either refrigerant or a mixture of refrigerant and nitrogen, an electronic leak detector can be used. The leak detector must be capable of detecting a hydrofluorocabon (HFC) refrigerant. Older leak detectors designed for R-22 will not be sensitive enough to effectively detect HFC refrigerants. Halide torches cannot effectively detect HFC refrigerant leaks.

NITROGEN IS A HIGH PRESSURE GAS. REMEMBER TO USE A PRESSURE REGULATOR COMING OFF THE NITROGEN TANK TO AVOID ANY RISK OF SEVERE PERSONAL INJURY.

A simple way to test for leaks is to use a solution of soap and water. Commercial soap solutions for leak detection tend to be more effective. Apply the solution to joints and connections. Generation of bubbles will indicate a pinhole leak. Several minutes may be required to generate a bubble in the case of a very small leak. When it is suspected that essentially no refrigerant remains in the system, the above method can be used to detect leaking nitrogen gas. However, the most convenient and effective means to detect a leak when Genetron AZ-50 or Genetron 404A is in the system is to use an electronic leak detector designed for HFC refrigerants. When a leak is found, the refrigerant must be recovered and the leak repaired prior to final charging and operation. If the refrigerant charge is 50 pounds or more, the system is subject to leak repair requirements under the Refrigerant Recycling Regulations of Section 608 of the Clean Air Act Amendments of 1990. In this case, the equipment owner must keep a record of the date and type of service performed and the amount of refrigerant added.

Environmental Considerations

Genetron AZ-50 and Genetron 404A are halogenated hydrocarbons. Treatment or disposal of wastes generated by use of these products may require special consideration, depending on the nature of the wastes and the means of discharge, treatment or disposal. For more information, refer to the Disposal Considerations and Regulatory Information sections of the Material Safety Data Sheet (MSDS).

If discarded unused, Genetron AZ-50 and Genetron 404A are not considered “hazardous waste” by the Resource Conservation and Recovery Act (RCRA). Because these refrigerants are considered to have minimum biodegradability, care should be taken to avoid releases to the environment. The disposal of Genetron AZ-50 and Genetron 404A may be subject to federal, state and local regulations. Users should conduct disposal operations in compliance with applicable federal, state and local laws and regulations. Appropriate regulatory agencies also should be consulted before discharging or disposing of waste materials.

Reclamation

The Clean Air Act Amendments of 1990 require mandatory recycling and reclamation of Genetron AZ-50 and Genetron 404A during maintenance, service or repair of air-conditioning and refrigeration equipment. Refrigerant that is too contaminated for reuse must be properly disposed of or reclaimed. In the U.S., reclamation can only be performed at an EPA (Environmental Protection Agency) approved reclamation facility before it may be resold to another party. Most Genetron refrigerant wholesalers will accept recovered Genetron AZ-50 and Genetron 404A for reclamation.

Retrofitting

Applications where Genetron AZ-50 or Genetron 404A are suitable retrofit replacement refrigerants include supermarket display cases, walk-in coolers, ice machines and other specialty applications.

Long-term vs. Interim Replacements

Where feasible, Genetron AZ-50 or Genetron 404A are the preferred retrofit replacements for R-502 in most OEM applications. In some cases, however, retrofitting with these refrigerants may be difficult because nearly all of the mineral oil in the system must be removed. For these instances, interim blends such as Genetron HP80 or Genetron 408A may be suitable options. These interim blends contain hydrochlorofluorocarbon (HCFC) refrigerants that have been shown to be ozone-depleting chemicals.

Technicians and end-users should keep in mind that future regulations may further restrict the use of HCFC-containing refrigerants and dictate the ultimate use of non-chlorine containing refrigerants such as Genetron® AZ-50® or Genetron 404A for servicing R-502 equipment.

Retrofit Lubricants

Genetron AZ-50 and Genetron 404A are not “drop-in” replacements for R-502. Mineral oils and alkylbenzene lubricants are immiscible with these refrigerants and therefore must be replaced with a miscible lubricant such as polyol ester lubricant. Consult the original equipment manufacturer for the recommended lubricant.

Retrofit Procedures

Retrofit procedures have been developed by Honeywell to help technicians perform successful retrofits of R-502 systems utilizing positive-displacement (reciprocating, rotary, scroll or screw) compressors with Genetron AZ-50 or Genetron 404A. However, these should not be used as substitutes for the equipment manufacturer’s specific recommendations. For further information on retrofitting with Genetron AZ-50 and Genetron 404A, refer to the Genetron Refrigeration Retrofit Guidelines bulletin G525-100.

Packaging

Genetron AZ-50 and Genetron 404A are available in a variety of containers including 24-lb. and 25-lb. disposable cylinders (404A and AZ-50 respectively), 100-lb. returnable cylinders, and one ton (1750-lb.) returnable tanks. Bulk tank trailers and isotanks are also available. Consult your Sales Representative if a larger container is required.

Technical Assistance

Honeywell technical specialists and sales representatives are available to assist customers with regard to all aspects relating to Genetron AZ-50 and Genetron 404A, including handling, use, storage, and applications design. For further information and/or technical assistance with Genetron refrigerants, contact:

Honeywell
Genetron Refrigerants
P.O. Box 1053
Morristown, NJ 07962-1053
Or call us at 1-800-631-8138

Available Literature

Honeywell has a wide range of literature available including MSDS sheets, retrofitting procedures, product specifications and product descriptions. For more information, call Honeywell at (800) 631-8138 or visit the Genetron web site at www.genetron.com. Most literature is also available through your local Genetron refrigerant wholesaler.

AZ-50 (R-507) Thermodynamic Table — English Units

Temp (°F)	Vapor Pressure (psia)	Liquid Volume (ft^3/lb)	Liquid Density (lb/ft^3)	Enthalpy Enthalpy (Btu/lb)	Vapor DH (Btu/lb)	Liquid Enthalpy (Btu/lb)	Vapor Entropy (Btu/lb-F)	Entropy (Btu/lb-F)
-60	11.8	3.5108	83.05	-5.95	85.92	79.97	-0.0145	0.2005
-58	12.5	3.3320	82.84	-5.36	85.62	80.26	-0.0130	0.2001
-56	13.2	3.1640	82.62	-4.77	85.32	80.55	-0.0116	0.1998
-54	14.0	3.0063	82.41	-4.18	85.01	80.83	-0.0101	0.1995
-52	14.7	2.8580	82.19	-3.58	84.70	81.12	-0.0086	0.1991
-50	15.6	2.7184	81.97	-2.99	84.40	81.41	-0.0072	0.1988
-48	16.4	2.5871	81.76	-2.39	84.08	81.69	-0.0057	0.1985
-46	17.3	2.4634	81.54	-1.80	83.78	81.98	-0.0043	0.1982
-44	18.2	2.3468	81.32	-1.20	83.46	82.26	-0.0029	0.1979
-42	19.1	2.2369	81.10	-0.60	83.15	82.55	-0.0014	0.1976
-40	20.1	2.1332	80.88	0.00	82.83	82.83	0.0000	0.1974
-38	21.1	2.0352	80.66	0.60	82.51	83.11	0.0014	0.1971
-36	22.2	1.9426	80.44	1.20	82.19	83.39	0.0028	0.1968
-34	23.3	1.8552	80.21	1.81	81.86	83.67	0.0043	0.1966
-32	24.5	1.7724	79.99	2.41	81.55	83.96	0.0057	0.1963
-30	25.7	1.6941	79.77	3.02	81.22	84.24	0.0071	0.1961
-28	26.9	1.6200	79.54	3.63	80.88	84.51	0.0085	0.1959
-26	28.2	1.5497	79.31	4.24	80.55	84.79	0.0099	0.1956
-24	29.5	1.4831	79.09	4.85	80.22	85.07	0.0113	0.1954
-22	30.9	1.4200	78.86	5.46	79.89	85.35	0.0127	0.1952
-20	32.3	1.3601	78.63	6.07	79.55	85.62	0.0141	0.1950
-18	33.8	1.3032	78.40	6.69	79.20	85.89	0.0155	0.1948
-16	35.3	1.2491	78.16	7.30	78.87	86.17	0.0168	0.1946
-14	36.9	1.1978	77.93	7.92	78.52	86.44	0.0182	0.1944
-12	38.5	1.1490	77.70	8.54	78.17	86.71	0.0196	0.1942
-10	40.2	1.1025	77.46	9.16	77.82	86.98	0.0210	0.1940
-8	42.0	1.0584	77.23	9.78	77.47	87.25	0.0223	0.1939
-6	43.8	1.0163	76.99	10.40	77.12	87.52	0.0237	0.1937
-4	45.6	0.9762	76.75	11.03	76.75	87.78	0.0251	0.1935
-2	47.5	0.9380	76.51	11.66	76.39	88.05	0.0264	0.1934
0	49.5	0.9016	76.27	12.28	76.03	88.31	0.0278	0.1932
2	51.6	0.8669	76.02	12.91	75.67	88.58	0.0291	0.1930
4	53.7	0.8337	75.78	13.55	75.29	88.84	0.0305	0.1929
6	55.8	0.8021	75.53	14.18	74.92	89.10	0.0319	0.1927
8	58.1	0.7719	75.29	14.81	74.54	89.35	0.0332	0.1926
10	60.4	0.7430	75.04	15.45	74.16	89.61	0.0346	0.1925
12	62.8	0.7154	74.79	16.09	73.78	89.87	0.0359	0.1923
14	65.2	0.6890	74.54	16.73	73.39	90.12	0.0372	0.1922
16	67.7	0.6638	74.28	17.37	73.00	90.37	0.0386	0.1920
18	70.3	0.6396	74.03	18.02	72.60	90.62	0.0399	0.1919
20	73.0	0.6165	73.77	18.67	72.20	90.87	0.0413	0.1918
22	75.7	0.5944	73.51	19.31	71.80	91.11	0.0426	0.1917
24	78.5	0.5732	73.25	19.96	71.40	91.36	0.0439	0.1915
26	81.4	0.5528	72.99	20.62	70.98	91.60	0.0453	0.1914
28	84.4	0.5333	72.72	21.27	70.57	91.84	0.0466	0.1913
30	87.4	0.5146	72.45	21.93	70.15	92.08	0.0479	0.1912
32	90.6	0.4967	72.19	22.59	69.72	92.31	0.0492	0.1911
34	93.8	0.4795	71.91	23.25	69.30	92.55	0.0506	0.1909
36	97.1	0.4629	71.64	23.91	68.87	92.78	0.0519	0.1908
38	100.5	0.4470	71.37	24.58	68.43	93.01	0.0532	0.1907
40	103.9	0.4318	71.09	25.25	67.98	93.23	0.0545	0.1906
42	107.5	0.4171	70.81	25.92	67.54	93.46	0.0559	0.1905
44	111.2	0.4030	70.53	26.59	67.09	93.68	0.0572	0.1904
46	114.9	0.3895	70.24	27.27	66.63	93.90	0.0585	0.1903
48	118.8	0.3764	69.95	27.95	66.16	94.11	0.0598	0.1902

AZ-50 (R-507) Thermodynamic Table — English Units – continued

Temp (°F)	Vapor Pressure (psia)	Liquid Volume (ft^3/lb)	Liquid Density (lb/ft^3)	Enthalpy Enthalpy (Btu/lb)	Vapor DH (Btu/lb)	Liquid Enthalpy (Btu/lb)	Vapor Entropy (Btu/lb-F)	Entropy (Btu/lb-F)
50	122.7	0.3638	69.66	28.63	65.69	94.32	0.0611	0.1900
52	126.7	0.3518	69.37	29.31	65.22	94.53	0.0625	0.1899
54	130.9	0.3401	69.07	30.00	64.74	94.74	0.0638	0.1898
56	135.1	0.3289	68.77	30.69	64.25	94.94	0.0651	0.1897
58	139.4	0.3181	68.47	31.38	63.76	95.14	0.0664	0.1896
60	143.9	0.3076	68.16	32.08	63.26	95.34	0.0677	0.1895
62	148.4	0.2976	67.86	32.78	62.75	95.53	0.0691	0.1893
64	153.1	0.2879	67.54	33.48	62.24	95.72	0.0704	0.1892
66	157.8	0.2785	67.23	34.19	61.71	95.90	0.0717	0.1891
68	162.7	0.2695	66.91	34.90	61.18	96.08	0.0730	0.1890
70	167.7	0.2608	66.58	35.61	60.65	96.26	0.0743	0.1888
72	172.8	0.2524	66.26	36.33	60.10	96.43	0.0757	0.1887
74	178.0	0.2442	65.92	37.05	59.54	96.59	0.0770	0.1886
76	183.3	0.2364	65.59	37.77	58.99	96.76	0.0783	0.1884
78	188.8	0.2288	65.25	38.50	58.41	96.91	0.0796	0.1883
80	194.3	0.2214	64.90	39.23	57.83	97.06	0.0810	0.1881
82	200.0	0.2143	64.55	39.96	57.25	97.21	0.0823	0.1880
84	205.8	0.2074	64.20	40.70	56.65	97.35	0.0836	0.1878
86	211.8	0.2007	63.84	41.45	56.04	97.49	0.0850	0.1877
88	217.8	0.1943	63.47	42.20	55.42	97.62	0.0863	0.1875
90	224.0	0.1880	63.10	42.95	54.79	97.74	0.0876	0.1873
92	230.3	0.1820	62.72	43.71	54.15	97.86	0.0890	0.1871
94	236.8	0.1761	62.34	44.48	53.49	97.97	0.0903	0.1870
96	243.4	0.1704	61.95	45.25	52.82	98.07	0.0917	0.1868
98	250.1	0.1649	61.55	46.02	52.14	98.16	0.0930	0.1866
100	257.0	0.1595	61.14	46.80	51.45	98.25	0.0944	0.1863
102	264.0	0.1543	60.73	47.59	50.74	98.33	0.0958	0.1861
104	271.2	0.1493	60.31	48.38	50.02	98.40	0.0971	0.1859
106	278.5	0.1443	59.88	49.19	49.27	98.46	0.0985	0.1856
108	285.9	0.1396	59.44	49.99	48.52	98.51	0.0999	0.1854
110	293.5	0.1349	58.99	50.81	47.74	98.55	0.1013	0.1851
112	301.3	0.1304	58.53	51.63	46.95	98.58	0.1027	0.1848
114	309.2	0.1260	58.06	52.47	46.13	98.60	0.1041	0.1845
116	317.3	0.1217	57.57	53.31	45.29	98.60	0.1055	0.1842
118	325.5	0.1175	57.08	54.16	44.43	98.59	0.1070	0.1839
120	333.9	0.1134	56.57	55.02	43.55	98.57	0.1084	0.1835
122	342.5	0.1094	56.04	55.89	42.64	98.53	0.1099	0.1832
124	351.2	0.1055	55.50	56.77	41.70	98.47	0.1113	0.1828
126	360.1	0.1017	54.94	57.67	40.72	98.39	0.1128	0.1823
128	369.2	0.0980	54.36	58.58	39.72	98.30	0.1143	0.1819
130	378.5	0.0943	53.76	59.51	38.67	98.18	0.1158	0.1814
132	387.9	0.0907	53.14	60.45	37.58	98.03	0.1174	0.1809
134	397.6	0.0872	52.48	61.41	36.45	97.86	0.1189	0.1803
136	407.4	0.0837	51.80	62.40	35.25	97.65	0.1205	0.1797
138	417.4	0.0803	51.08	63.40	34.01	97.41	0.1222	0.1791
140	427.7	0.0769	50.32	64.44	32.68	97.12	0.1238	0.1783
142	438.1	0.0735	49.52	65.51	31.28	96.79	0.1255	0.1775
144	448.8	0.0701	48.65	66.61	29.79	96.40	0.1273	0.1766
146	459.6	0.0667	47.72	67.76	28.17	95.93	0.1291	0.1756
148	470.8	0.0632	46.69	68.98	26.39	95.37	0.1311	0.1745
150	482.1	0.0597	45.55	70.26	24.44	94.70	0.1331	0.1732

404A Thermodynamic Table — English Units

Temp (°F)	Bubble Pressure (Liquid) (psia)	Dew Pressure (Vapor) (psia)	Vapor Volume (ft^3/lb)	Liquid Density (lb/ft^3)	Liquid Enthalpy (Btu/lb)	Enthalpy DH (Btu/lb)	Vapor Enthalpy (Btu/lb)	Liquid Entropy (Btu/lb^{-F})	Vapor Entropy (Btu/lb^{-F})
-60	11.6	11.1	3.8030	82.48	-6.00	87.60	81.60	-0.01	0.2051
-58	12.2	11.7	3.6063	82.27	-5.40	87.29	81.89	-0.01	0.2047
-56	12.9	12.4	3.4217	82.06	-4.81	86.99	82.18	-0.01	0.2043
-54	13.6	13.1	3.2485	81.85	-4.21	86.68	82.47	-0.01	0.2040
-52	14.4	13.9	3.0859	81.63	-3.61	86.37	82.76	-0.01	0.2036
-50	15.2	14.6	2.9330	81.42	-3.01	86.06	83.05	-0.01	0.2033
-48	16.0	15.4	2.7893	81.20	-2.41	85.75	83.34	-0.01	0.2030
-46	16.8	16.3	2.6540	80.99	-1.81	85.44	83.63	0.00	0.2026
-44	17.7	17.1	2.5266	80.77	-1.21	85.12	83.91	0.00	0.2023
-42	18.7	18.1	2.4066	80.56	-0.60	84.80	84.20	0.00	0.2020
-40	19.6	19.0	2.2935	80.34	0.00	84.49	84.49	0.00	0.2017
-38	20.6	20.0	2.1867	80.12	0.61	84.16	84.77	0.00	0.2014
-36	21.7	21.0	2.0859	79.90	1.21	83.85	85.06	0.00	0.2011
-34	22.7	22.1	1.9908	79.68	1.82	83.52	85.34	0.00	0.2009
-32	23.9	23.2	1.9008	79.46	2.43	83.19	85.62	0.01	0.2006
-30	25.0	24.3	1.8158	79.24	3.04	82.86	85.90	0.01	0.2003
-28	26.2	25.5	1.7353	79.02	3.65	82.54	86.19	0.01	0.2001
-26	27.5	26.7	1.6591	78.80	4.27	82.20	86.47	0.01	0.1998
-24	28.8	28.0	1.5870	78.57	4.88	81.87	86.75	0.01	0.1996
-22	30.1	29.3	1.5186	78.35	5.50	81.53	87.03	0.01	0.1994
-20	31.5	30.7	1.4538	78.12	6.11	81.19	87.30	0.01	0.1991
-18	33.0	32.1	1.3922	77.90	6.73	80.85	87.58	0.02	0.1989
-16	34.5	33.6	1.3339	77.67	7.35	80.51	87.86	0.02	0.1987
-14	36.0	35.1	1.2784	77.44	7.98	80.15	88.13	0.02	0.1985
-12	37.6	36.7	1.2257	77.21	8.60	79.81	88.41	0.02	0.1983
-10	39.3	38.3	1.1756	76.98	9.22	79.46	88.68	0.02	0.1981
-8	41.0	40.0	1.1280	76.74	9.85	79.10	88.95	0.02	0.1979
-6	42.7	41.7	1.0827	76.51	10.48	78.74	89.22	0.02	0.1977
-4	44.5	43.5	1.0396	76.27	11.11	78.38	89.49	0.03	0.1975
-2	46.4	45.4	0.9985	76.04	11.74	78.02	89.76	0.03	0.1973
0	48.4	47.3	0.9593	75.80	12.37	77.65	90.02	0.03	0.1972
2	50.4	49.3	0.9220	75.56	13.00	77.29	90.29	0.03	0.1970
4	52.4	51.3	0.8864	75.32	13.64	76.91	90.55	0.03	0.1968
6	54.5	53.4	0.8525	75.08	14.28	76.53	90.81	0.03	0.1967
8	56.7	55.6	0.8200	74.84	14.92	76.16	91.08	0.03	0.1965
10	59.0	57.8	0.7891	74.59	15.56	75.78	91.34	0.03	0.1964
12	61.3	60.1	0.7595	74.35	16.20	75.39	91.59	0.04	0.1962
14	63.7	62.5	0.7313	74.10	16.84	75.01	91.85	0.04	0.1961
16	66.2	64.9	0.7043	73.85	17.49	74.61	92.10	0.04	0.1959
18	68.7	67.4	0.6784	73.60	18.14	74.22	92.36	0.04	0.1958
20	71.3	70.0	0.6537	73.35	18.79	73.82	92.61	0.04	0.1956
22	74.0	72.7	0.6300	73.09	19.44	73.42	92.86	0.04	0.1955
24	76.7	75.4	0.6074	72.84	20.10	73.00	93.10	0.04	0.1954
26	79.5	78.2	0.5857	72.58	20.75	72.60	93.35	0.05	0.1952
28	82.4	81.1	0.5649	72.32	21.41	72.18	93.59	0.05	0.1951
30	85.4	84.0	0.5449	72.06	22.07	71.76	93.83	0.05	0.1950
32	88.5	87.1	0.5258	71.79	22.74	71.33	94.07	0.05	0.1948
34	91.7	90.2	0.5074	71.53	23.40	70.91	94.31	0.05	0.1947
36	94.9	93.4	0.4898	71.26	24.07	70.47	94.54	0.05	0.1946
38	98.2	96.7	0.4729	70.99	24.74	70.04	94.78	0.05	0.1945
40	101.6	100.1	0.4567	70.72	25.41	69.60	95.01	0.05	0.1943
42	105.1	103.5	0.4411	70.44	26.09	69.14	95.23	0.06	0.1942
44	108.7	107.1	0.4261	70.17	26.76	68.70	95.46	0.06	0.1941
46	112.3	110.7	0.4117	69.89	27.44	68.24	95.68	0.06	0.1940
48	116.1	114.5	0.3978	69.60	28.12	67.78	95.90	0.06	0.1939

404A Thermodynamic Table — English Units – continued

Temp (°F)	Bubble Pressure (Liquid) (psia)	Dew Pressure (Vapor) (psia)	Vapor Volume (ft^3/lb)	Liquid Density (lb/ft^3)	Liquid Enthalpy (Btu/lb)	Enthalpy DH (Btu/lb)	Vapor Enthalpy (Btu/lb)	Liquid Entropy (Btu/lb-°F)	Vapor Entropy (Btu/lb-°F)
50	120.0	118.3	0.3845	69.32	28.81	67.31	96.12	0.06	0.1937
52	123.9	122.2	0.3716	69.03	29.50	66.83	96.33	0.06	0.1936
54	128.0	126.3	0.3593	68.74	30.19	66.35	96.54	0.06	0.1935
56	132.1	130.4	0.3474	68.45	30.88	65.87	96.75	0.07	0.1934
58	136.4	134.6	0.3359	68.16	31.58	65.37	96.95	0.07	0.1932
60	140.7	138.9	0.3249	67.86	32.28	64.87	97.15	0.07	0.1931
62	145.1	143.4	0.3142	67.55	32.98	64.36	97.34	0.07	0.1930
64	149.7	147.9	0.3039	67.25	33.68	63.86	97.54	0.07	0.1929
66	154.4	152.5	0.2940	66.94	34.39	63.34	97.73	0.07	0.1927
68	159.1	157.3	0.2845	66.63	35.10	62.81	97.91	0.07	0.1926
70	164.0	162.1	0.2753	66.31	35.82	62.27	98.09	0.07	0.1925
72	169.0	167.1	0.2664	65.99	36.54	61.73	98.27	0.08	0.1923
74	174.1	172.2	0.2578	65.67	37.26	61.18	98.44	0.08	0.1922
76	179.3	177.4	0.2495	65.34	37.99	60.62	98.61	0.08	0.1921
78	184.6	182.7	0.2414	65.01	38.72	60.05	98.77	0.08	0.1919
80	190.1	188.1	0.2337	64.68	39.45	59.48	98.93	0.08	0.1918
82	195.7	193.7	0.2262	64.34	40.19	58.89	99.08	0.08	0.1916
84	201.3	199.3	0.2189	63.99	40.93	58.30	99.23	0.08	0.1914
86	207.2	205.1	0.2119	63.64	41.68	57.69	99.37	0.09	0.1913
88	213.1	211.1	0.2051	63.28	42.43	57.08	99.51	0.09	0.1911
90	219.2	217.1	0.1985	62.92	43.18	56.46	99.64	0.09	0.1909
92	225.4	223.3	0.1921	62.56	43.95	55.81	99.76	0.09	0.1908
94	231.7	229.6	0.1859	62.18	44.71	55.17	99.88	0.09	0.1906
96	238.1	236.0	0.1799	61.80	45.48	54.51	99.99	0.09	0.1904
98	244.7	242.6	0.1741	61.42	46.26	53.83	100.09	0.09	0.1902
100	251.5	249.3	0.1685	61.03	47.04	53.15	100.19	0.09	0.1900
102	258.3	256.2	0.1630	60.63	47.83	52.45	100.28	0.10	0.1897
104	265.3	263.2	0.1577	60.22	48.62	51.74	100.36	0.10	0.1895
106	272.5	270.3	0.1526	59.81	49.42	51.01	100.43	0.10	0.1893
108	279.8	277.6	0.1475	59.38	50.23	50.26	100.49	0.10	0.1890
110	287.2	285.1	0.1427	58.95	51.05	49.49	100.54	0.10	0.1888
112	294.8	292.7	0.1379	58.51	51.87	48.71	100.58	0.10	0.1885
114	302.6	300.4	0.1333	58.05	52.70	47.91	100.61	0.10	0.1882
116	310.5	308.3	0.1288	57.59	53.54	47.09	100.63	0.11	0.1879
118	318.5	316.4	0.1245	57.12	54.38	46.26	100.64	0.11	0.1876
120	326.7	324.6	0.1202	56.63	55.24	45.39	100.63	0.11	0.1873
122	335.1	333.0	0.1160	56.13	56.11	44.50	100.61	0.11	0.1869
124	343.7	341.5	0.1120	55.61	56.99	43.58	100.57	0.11	0.1865
126	352.4	350.2	0.1080	55.08	57.88	42.64	100.52	0.11	0.1861
128	361.3	359.1	0.1041	54.53	58.78	41.66	100.44	0.11	0.1857
130	370.3	368.2	0.1003	53.96	59.70	40.65	100.35	0.12	0.1853
132	379.6	377.5	0.0966	53.37	60.63	39.60	100.23	0.12	0.1848
134	389.0	386.9	0.0930	52.76	61.58	38.51	100.09	0.12	0.1843
136	398.6	396.6	0.0894	52.12	62.54	37.38	99.92	0.12	0.1837
138	408.4	406.4	0.0858	51.46	63.53	36.19	99.72	0.12	0.1831
140	418.4	416.4	0.0823	50.75	64.54	34.94	99.48	0.12	0.1824
142	428.6	426.6	0.0789	50.02	65.58	33.63	99.21	0.13	0.1817
144	439.0	437.1	0.0754	49.23	66.65	32.23	98.88	0.13	0.1809
146	449.6	447.8	0.0720	48.39	67.76	30.74	98.50	0.13	0.1801
148	460.4	458.6	0.0686	47.49	68.91	29.14	98.05	0.13	0.1791
150	471.5	469.8	0.0651	46.50	70.12	27.40	97.52	0.13	0.1780

AZ-50 (R-507) Thermodynamic Table — SI Units

Temp (°C)	Pressure (kPa)	Vapor Volume (m^3/kg)	Liquid Density (kg/m^3)	Liquid Enthalpy (kJ/kg)	Enthalpy DH (kJ/kg)	Vapor Enthalpy (kJ/kg)	Liquid Entropy (kJ/kg-C)	Vapor Entropy (kJ/kg-C)
-50	86	0.2080	1327	135.03	199.02	334.05	0.7395	1.6314
-49	91	0.1985	1324	136.27	198.38	334.65	0.7450	1.6301
-48	95	0.1896	1321	137.51	197.74	335.25	0.7505	1.6288
-47	100	0.1811	1318	138.75	197.10	335.85	0.7560	1.6276
-46	105	0.1731	1314	139.99	196.46	336.45	0.7615	1.6264
-45	110	0.1656	1311	141.24	195.81	337.05	0.7669	1.6252
-44	115	0.1584	1308	142.48	195.17	337.65	0.7724	1.6241
-43	121	0.1516	1305	143.73	194.51	338.24	0.7778	1.6229
-42	127	0.1451	1302	144.99	193.85	338.84	0.7832	1.6219
-41	133	0.1390	1299	146.24	193.19	339.43	0.7886	1.6208
-40	139	0.1332	1296	147.49	192.54	340.03	0.7940	1.6198
-39	145	0.1277	1292	148.75	191.87	340.62	0.7993	1.6188
-38	152	0.1224	1289	150.01	191.20	341.21	0.8047	1.6178
-37	158	0.1174	1286	151.28	190.52	341.80	0.8100	1.6168
-36	165	0.1127	1283	152.54	189.84	342.38	0.8153	1.6159
-35	173	0.1082	1280	153.81	189.16	342.97	0.8207	1.6150
-34	180	0.1039	1276	155.08	188.47	343.55	0.8260	1.6141
-33	188	0.0998	1273	156.35	187.79	344.14	0.8312	1.6132
-32	196	0.0959	1270	157.63	187.09	344.72	0.8365	1.6123
-31	204	0.0922	1266	158.90	186.40	345.30	0.8418	1.6115
-30	213	0.0887	1263	160.18	185.70	345.88	0.8470	1.6107
-29	222	0.0853	1260	161.46	184.99	346.45	0.8522	1.6099
-28	231	0.0821	1257	162.75	184.28	347.03	0.8575	1.6092
-27	240	0.0790	1253	164.04	183.56	347.60	0.8627	1.6084
-26	250	0.0760	1250	165.33	182.84	348.17	0.8679	1.6077
-25	260	0.0732	1246	166.62	182.12	348.74	0.8731	1.6070
-24	270	0.0706	1243	167.92	181.38	349.30	0.8783	1.6063
-23	281	0.0680	1240	169.22	180.65	349.87	0.8834	1.6056
-22	292	0.0655	1236	170.52	179.91	350.43	0.8886	1.6049
-21	303	0.0632	1233	171.82	179.17	350.99	0.8937	1.6043
- 20	315	0.0609	1229	173.13	178.41	351.54	0.8989	1.6037
-19	326	0.0588	1226	174.44	177.66	352.10	0.9040	1.6030
-18	339	0.0567	1222	175.76	176.89	352.65	0.9091	1.6024
-17	351	0.0548	1219	177.07	176.13	353.20	0.9142	1.6018
-16	364	0.0529	1215	178.39	175.36	353.75	0.9193	1.6013
-15	377	0.0511	1212	179.72	174.57	354.29	0.9244	1.6007
-14	391	0.0493	1208	181.04	173.79	354.83	0.9295	1.6001
-13	405	0.0476	1205	182.37	173.00	355.37	0.9346	1.5996
-12	420	0.0460	1201	183.71	172.20	355.91	0.9397	1.5991
-11	434	0.0445	1198	185.05	171.39	356.44	0.9447	1.5986
-10	450	0.0430	1194	186.39	170.58	356.97	0.9498	1.5980
-9	465	0.0416	1190	187.73	169.77	357.50	0.9548	1.5975
-8	481	0.0402	1187	189.08	168.94	358.02	0.9599	1.5971
-7	498	0.0389	1183	190.43	168.11	358.54	0.9649	1.5966
-6	514	0.0377	1179	191.78	167.28	359.06	0.9699	1.5961
-5	532	0.0364	1175	193.14	166.43	359.57	0.9750	1.5956
-4	549	0.0353	1172	194.51	165.57	360.08	0.9800	1.5952
-3	567	0.0341	1168	195.87	164.71	360.58	0.9850	1.5947
-2	586	0.0331	1164	197.25	163.83	361.08	0.9900	1.5943
-1	605	0.0320	1160	198.62	162.96	361.58	0.9950	1.5938
0	624	0.0310	1156	200.00	162.07	362.07	1.0000	1.5934
1	644	0.0300	1152	201.38	161.18	362.56	1.0050	1.5929
2	665	0.0291	1148	202.77	160.28	363.05	1.0100	1.5925
3	686	0.0282	1144	204.16	159.37	363.53	1.0150	1.5921
4	707	0.0273	1141	205.56	158.44	364.00	1.0199	1.5917

AZ-50 (R-507) Thermodynamic Table — SI Units – continued

Temp (°C)	Pressure (kPa)	Vapor Volume (m^3/kg)	Liquid Density (kg/m^3)	Liquid Enthalpy (kJ/kg)	Enthalpy DH (kJ/kg)	Vapor Enthalpy (kJ/kg)	Liquid Entropy (kJ/kg-C)	Vapor Entropy (kJ/kg-C)
5	729	0.0265	1136	206.96	157.51	364.47	1.0249	1.5912
6	751	0.0257	1132	208.37	156.57	364.94	1.0299	1.5908
7	774	0.0249	1128	209.78	155.62	365.40	1.0349	1.5904
8	798	0.0242	1124	211.20	154.65	365.85	1.0398	1.5900
9	822	0.0234	1120	212.62	153.68	366.30	1.0448	1.5895
10	846	0.0227	1116	214.04	152.71	366.75	1.0498	1.5891
11	871	0.0220	1112	215.47	151.71	367.18	1.0548	1.5887
12	897	0.0214	1107	216.91	150.70	367.61	1.0597	1.5883
13	923	0.0207	1103	218.35	149.69	368.04	1.0647	1.5878
14	949	0.0201	1099	219.80	148.66	368.46	1.0696	1.5874
15	977	0.0195	1094	221.25	147.62	368.87	1.0746	1.5869
16	1004	0.0190	1090	222.71	146.57	369.28	1.0796	1.5865
17	1033	0.0184	1085	224.18	145.50	369.68	1.0845	1.5860
18	1062	0.0179	1081	225.65	144.42	370.07	1.0895	1.5856
19	1092	0.0173	1076	227.13	143.32	370.45	1.0945	1.5851
20	1122	0.0168	1072	228.61	142.22	370.83	1.0995	1.5846
21	1153	0.0163	1067	230.10	141.09	371.19	1.1044	1.5841
22	1184	0.0159	1062	231.60	139.95	371.55	1.1094	1.5836
23	1216	0.0154	1058	233.10	138.81	371.91	1.1144	1.5831
24	1249	0.0150	1053	234.61	137.64	372.25	1.1194	1.5826
25	1283	0.0145	1048	236.13	136.45	372.58	1.1244	1.5821
26	1317	0.0141	1043	237.66	135.25	372.91	1.1294	1.5815
27	1351	0.0137	1038	239.19	134.03	373.22	1.1344	1.5810
28	1387	0.0133	1033	240.73	132.79	373.52	1.1394	1.5804
29	1423	0.0129	1028	242.28	131.54	373.82	1.1444	1.5798
30	1460	0.0125	1023	243.84	130.26	374.10	1.1495	1.5792
31	1498	0.0122	1017	245.41	128.96	374.37	1.1545	1.5785
32	1536	0.0118	1012	246.98	127.65	374.63	1.1595	1.5779
33	1575	0.0115	1007	248.57	126.31	374.88	1.1646	1.5772
34	1615	0.0111	1001	250.16	124.95	375.11	1.1697	1.5765
35	1655	0.0108	995	251.77	123.56	375.33	1.1748	1.5758
36	1697	0.0105	990	253.39	122.15	375.54	1.1799	1.5750
37	1739	0.0102	984	255.01	120.72	375.73	1.1850	1.5742
38	1781	0.0099	978	256.65	119.26	375.91	1.1901	1.5734
39	1825	0.0096	972	258.30	117.77	376.07	1.1953	1.5726
40	1870	0.0093	966	259.96	116.26	376.22	1.2004	1.5717
41	1915	0.0090	960	261.64	114.71	376.35	1.2056	1.5708
42	1961	0.0088	954	263.33	113.13	376.46	1.2108	1.5698
43	2008	0.0085	947	265.03	111.51	376.54	1.2161	1.5688
44	2056	0.0083	940	266.74	109.87	376.61	1.2213	1.5678
45	2104	0.0080	934	268.48	108.18	376.66	1.2266	1.5667
46	2154	0.0078	927	270.23	106.45	376.68	1.2320	1.5655
47	2204	0.0075	920	271.99	104.69	376.68	1.2373	1.5643
48	2256	0.0073	913	273.78	102.88	376.66	1.2427	1.5631
49	2308	0.0071	905	275.58	101.02	376.60	1.2481	1.5617
50	2361	0.0068	898	277.41	99.11	376.52	1.2536	1.5603
51	2415	0.0066	890	279.26	97.14	376.40	1.2591	1.5588
52	2470	0.0064	882	281.13	95.12	376.25	1.2647	1.5573
53	2527	0.0062	874	283.03	93.02	376.05	1.2703	1.5556
54	2584	0.0060	865	284.95	90.87	375.82	1.2760	1.5538
55	2642	0.0058	856	286.91	88.63	375.54	1.2818	1.5519
56	2701	0.0056	847	288.90	86.31	375.21	1.2876	1.5499
57	2761	0.0054	837	290.93	83.90	374.83	1.2936	1.5477
58	2823	0.0052	827	293.00	81.38	374.38	1.2996	1.5454
59	2885	0.0050	817	295.11	78.75	373.86	1.3058	1.5429
60	2949	0.0048	806	297.28	75.98	373.26	1.3120	1.5401

404A Thermodynamic Table — SI Units

Temp (°C)	Bubble Pressure (Liquid) (kPa)	Dew Pressure (Vapor) (kPa)	Vapor Volume (m^3/kg)	Liquid Density (kg/m^3)	Liquid Enthalpy (kJ/kg)	Enthalpy DH (kJ/kg)	Vapor Enthalpy (kJ/kg)	Liquid Entropy (kJ/kg-C)	Vapor Entropy (kJ/kg-C)
-50	84	81	0.2251	1318	134.59	202.92	337.51	0.7377	1.6491
-49	89	85	0.2147	1315	135.84	202.27	338.11	0.7433	1.6477
-48	93	90	0.2049	1312	137.09	201.63	338.72	0.7488	1.6463
-47	98	94	0.1956	1309	138.34	200.99	339.33	0.7543	1.6450
-46	102	99	0.1869	1306	139.59	200.34	339.93	0.7599	1.6437
-45	107	104	0.1786	1302	140.85	199.68	340.53	0.7653	1.6424
-44	113	109	0.1707	1299	142.10	199.04	341.14	0.7708	1.6412
-43	118	114	0.1633	1296	143.36	198.38	341.74	0.7763	1.6400
-42	124	119	0.1562	1293	144.62	197.72	342.34	0.7817	1.6388
-41	129	125	0.1495	1290	145.89	197.05	342.94	0.7872	1.6377
-40	135	131	0.1432	1287	147.15	196.38	343.53	0.7926	1.6365
-39	141	137	0.1372	1284	148.42	195.71	344.13	0.7980	1.6355
-38	148	143	0.1315	1281	149.69	195.04	344.73	0.8034	1.6344
-37	155	150	0.1260	1277	150.96	194.36	345.32	0.8088	1.6333
-36	161	157	0.1209	1274	152.23	193.68	345.91	0.8141	1.6323
-35	169	164	0.1160	1271	153.51	193.00	346.51	0.8195	1.6313
-34	176	171	0.1113	1268	154.79	192.31	347.10	0.8248	1.6304
-33	183	178	0.1069	1265	156.07	191.61	347.68	0.8301	1.6294
-32	191	186	0.1027	1261	157.35	190.92	348.27	0.8354	1.6285
-31	199	194	0.0986	1258	158.64	190.22	348.86	0.8407	1.6276
-30	208	202	0.0948	1255	159.93	189.51	349.44	0.8460	1.6267
-29	216	211	0.0912	1252	161.22	188.80	350.02	0.8513	1.6259
-28	225	220	0.0877	1248	162.52	188.08	350.60	0.8565	1.6250
-27	235	229	0.0843	1245	163.81	187.37	351.18	0.8618	1.6242
-26	244	238	0.0812	1242	165.11	186.64	351.75	0.8670	1.6234
-25	254	248	0.0781	1239	166.41	185.92	352.33	0.8723	1.6226
-24	264	257	0.0753	1235	167.72	185.18	352.90	0.8775	1.6219
-23	274	268	0.0725	1232	169.03	184.44	353.47	0.8827	1.6211
-22	285	278	0.0698	1229	170.34	183.70	354.04	0.8879	1.6204
-21	296	289	0.0673	1225	171.65	182.95	354.60	0.8930	1.6197
-20	307	300	0.0649	1222	172.97	182.19	355.16	0.8982	1.6190
-19	319	312	0.0626	1218	174.29	181.43	355.72	0.9034	1.6183
-18	331	324	0.0604	1215	175.61	180.67	356.28	0.9085	1.6177
-17	343	336	0.0583	1212	176.93	179.91	356.84	0.9137	1.6170
-16	356	348	0.0562	1208	178.26	179.13	357.39	0.9188	1.6164
-15	369	361	0.0543	1205	179.60	178.34	357.94	0.9240	1.6158
-14	382	374	0.0524	1201	180.93	177.56	358.49	0.9291	1.6152
-13	396	388	0.0506	1198	182.27	176.76	359.03	0.9342	1.6146
-12	410	402	0.0489	1194	183.61	175.97	359.58	0.9393	1.6140
-11	424	416	0.0472	1191	184.96	175.15	360.11	0.9444	1.6134
-10	439	431	0.0457	1187	186.31	174.34	360.65	0.9495	1.6129
-9	454	446	0.0441	1183	187.66	173.52	361.18	0.9546	1.6123
-8	470	461	0.0427	1180	189.01	172.70	361.71	0.9596	1.6118
-7	486	477	0.0413	1176	190.37	171.87	362.24	0.9647	1.6113
-6	502	494	0.0399	1172	191.74	171.02	362.76	0.9698	1.6107
-5	519	510	0.0386	1169	193.10	170.18	363.28	0.9748	1.6102
-4	537	527	0.0374	1165	194.48	169.32	363.80	0.9799	1.6097
-3	554	545	0.0362	1161	195.85	168.46	364.31	0.9849	1.6092
-2	573	563	0.0350	1158	197.23	167.59	364.82	0.9899	1.6087
-1	591	581	0.0339	1154	198.61	166.71	365.32	0.9950	1.6082
0	610	600	0.0328	1150	200.00	165.82	365.82	1.0000	1.6078
1	630	620	0.0318	1146	201.39	164.93	366.32	1.0050	1.6073
2	650	640	0.0308	1142	202.79	164.02	366.81	1.0100	1.6068
3	670	660	0.0298	1138	204.19	163.10	367.29	1.0151	1.6064
4	691	681	0.0289	1135	205.59	162.19	367.78	1.0201	1.6059
5	712	702	0.0280	1131	207.00	161.25	368.25	1.0251	1.6054

404A Thermodynamic Table — SI Units – continued

Temp (°C)	Bubble Pressure (Liquid) (kPa)	Dew Pressure (Vapor) (kPa)	Vapor Volume (m^3/kg)	Liquid Density (kg/m^3)	Liquid Enthalpy (kJ/kg)	Enthalpy DH (kJ/kg)	Vapor Enthalpy (kJ/kg)	Liquid Entropy (kJ/kg-C)	Vapor Entropy (kJ/kg-C)
6	734	724	0.0272	1127	208.41	160.32	368.73	1.0301	1.6050
7	757	746	0.0263	1123	209.83	159.37	369.20	1.0351	1.6045
8	780	769	0.0255	1119	211.26	158.40	369.66	1.0401	1.6041
9	803	792	0.0248	1115	212.68	157.43	370.11	1.0451	1.6036
10	827	816	0.0240	1110	214.12	156.45	370.57	1.0501	1.6032
11	852	840	0.0233	1106	215.56	155.45	371.01	1.0551	1.6027
12	877	865	0.0226	1102	217.00	154.45	371.45	1.0600	1.6022
13	902	890	0.0219	1098	218.45	153.44	371.89	1.0650	1.6018
14	928	916	0.0213	1094	219.90	152.42	372.32	1.0700	1.6013
15	955	943	0.0206	1089	221.36	151.38	372.74	1.0750	1.6009
16	982	970	0.0200	1085	222.83	150.32	373.15	1.0800	1.6004
17	1010	998	0.0194	1081	224.30	149.26	373.56	1.0850	1.5999
18	1039	1026	0.0189	1076	225.78	148.18	373.96	1.0900	1.5994
19	1068	1055	0.0183	1072	227.26	147.10	374.36	1.0950	1.5989
20	1097	1084	0.0178	1067	228.75	145.99	374.74	1.1000	1.5984
21	1127	1115	0.0172	1063	230.25	144.87	375.12	1.1050	1.5979
22	1158	1145	0.0167	1058	231.75	143.74	375.49	1.1100	1.5974
23	1190	1177	0.0163	1054	233.26	142.59	375.85	1.1150	1.5969
24	1222	1209	0.0158	1049	234.77	141.44	376.21	1.1200	1.5964
25	1255	1241	0.0153	1044	236.30	140.25	376.55	1.1250	1.5958
26	1288	1274	0.0149	1039	237.83	139.06	376.89	1.1300	1.5953
27	1322	1308	0.0144	1034	239.37	137.85	377.22	1.1351	1.5947
28	1357	1343	0.0140	1029	240.91	136.62	377.53	1.1401	1.5941
29	1392	1378	0.0136	1024	242.47	135.37	377.84	1.1451	1.5935
30	1428	1414	0.0132	1019	244.03	134.11	378.14	1.1502	1.5929
31	1465	1451	0.0128	1014	245.60	132.82	378.42	1.1552	1.5923
32	1503	1489	0.0125	1009	247.18	131.52	378.70	1.1603	1.5916
33	1541	1527	0.0121	1004	248.77	130.19	378.96	1.1654	1.5909
34	1580	1566	0.0118	998	250.37	128.84	379.21	1.1704	1.5903
35	1620	1605	0.0114	993	251.97	127.48	379.45	1.1755	1.5895
36	1660	1645	0.0111	988	253.59	126.08	379.67	1.1806	1.5888
37	1701	1687	0.0108	982	255.22	124.67	379.89	1.1858	1.5880
38	1743	1728	0.0105	976	256.86	123.22	380.08	1.1909	1.5872
39	1786	1771	0.0101	971	258.51	121.75	380.26	1.1961	1.5864
40	1829	1815	0.0099	965	260.17	120.26	380.43	1.2012	1.5855
41	1874	1859	0.0096	959	261.85	118.73	380.58	1.2064	1.5846
42	1919	1904	0.0093	953	263.53	117.18	380.71	1.2116	1.5837
43	1965	1950	0.0090	946	265.23	115.59	380.82	1.2169	1.5827
44	2012	1997	0.0087	940	266.95	113.97	380.92	1.2221	1.5817
45	2059	2044	0.0085	934	268.68	112.31	380.99	1.2274	1.5807
46	2108	2093	0.0082	927	270.42	110.63	381.05	1.2327	1.5796
47	2157	2142	0.0080	920	272.18	108.90	381.08	1.2381	1.5784
48	2207	2192	0.0077	913	273.96	107.12	381.08	1.2434	1.5772
49	2259	2244	0.0075	906	275.76	105.30	381.06	1.2488	1.5759
50	2311	2296	0.0072	899	277.57	103.44	381.01	1.2543	1.5746
51	2364	2349	0.0070	892	279.41	101.52	380.93	1.2598	1.5732
52	2418	2403	0.0068	884	281.27	99.55	380.82	1.2653	1.5717
53	2472	2458	0.0066	876	283.15	97.53	380.68	1.2709	1.5701
54	2528	2514	0.0064	868	285.06	95.44	380.50	1.2766	1.5685
55	2585	2571	0.0062	860	286.99	93.29	380.28	1.2823	1.5667
56	2643	2629	0.0059	851	288.96	91.05	380.01	1.2880	1.5648
57	2702	2688	0.0057	842	290.95	88.74	379.69	1.2939	1.5628
58	2762	2748	0.0055	833	292.99	86.33	379.32	1.2998	1.5607
59	2823	2809	0.0053	823	295.06	83.83	378.89	1.3059	1.5584
60	2885	2871	0.0051	813	297.18	81.22	378.40	1.3120	1.5559

Notes

Notes

Notes

Notes

Worldwide Sales Offices

For more information contact your
Honeywell Refrigerants representative

United States
Honeywell Chemicals
101 Columbia Road
Morristown, NJ 07962-1053
Phone: 800-631-8138
Fax: 973-455-6395

Latin America-Caribbean
Honeywell Chemicals Mexico
Constituyentes 900
Col. Lomas Altas
C.P. 11950, Mexico DF
Mexico
Phone: 52-55-5549-0313
Fax: 52-55-5544-9803

Canada
Honeywell Asca. Inc.
3333 Unity Drive
Mississauga, Ontario
L5L 3S6
Phone: 905-608-6325
Fax: 905-608-6327

Asia-Pacific
Honeywell (China) Co., ltd.
No 430, Li Bing Road
Zhang Jiang Hi-Tech Park
Pudong New Area, Shanghai 201203
China
Phone: 86-21-2894-2000
Fax: 86-21-5855-2719

Honeywell Chemicals Inc., Japan
New Pier Takeshiba
South Tower Building, 20th Floor
1-16-1 Kaigan, Minato-ku,
Tokyo, Japan
Phone: 81-3-6730-7083
Fax: 81-3-6730-7221

Honeywell Chemicals, Korea
6F Janghakjaedan, B/D 44-1
Bangpo-Dong, Seocho-Ku
Seoul 137040, Korea
Phone: 8-22-595-0204
Fax: 8-22-595-4964

Honeywell Specialty Chemicals (Singapore) Pte. Ltd.
17 Changi Business Park Central 1
Honeywell Building
Singapore 486073
Phone: 65-6355-2828
Fax: 65-6783-2947

Honeywell International
71 Queens Road, Ground Floor
Melbourne, Victoria 3004
Australia
Phone: 61-3-9529-1411
Fax: 61-3-9510-9837

Northern and Central Europe
Honeywell Belgium NV
Haasrode Research Park
Grauwmeer 1
3001 Heverlee
Belgium
Phone: 32-16-39-1278
Fax: 32-16-39-1277

Southern Europe, Middle East and Africa
Honeywell Fluorine Products Italia S.r.l.
Viale De Gasperi 19
20020 Lainate MI
Italia
Phone: +39-02-9379.6777 (ext 24 / 25 or 26)

www.honeywell.com/genetron

Customer Service

To place an order from anywhere in the
Continental United States, Hawaii and
the Caribbean:

Phone: 800-522-8001
Fax: 800-458-9073

In Canada:
Phone: 800-553-9749
Fax: 800-553-9750

Outside these areas:
Phone: 973-455-6300
Fax: 973-455-2763

Northern and Central Europe
Phone: +32-16-391.209
Phone: +32-16-391.265
Fax: +32-16-391.235

Southern Europe, Middle East and Africa
Phone: +39-02-9379.6777 (ext. 24 / 25 and 26)
Fax: +39-02-9379.6761

Honeywell

G 525-099
Printed in U.S.A.
© 2006 Honeywell International Inc.

M&M REFRIGERATION

STANDARD HORIZONTAL HIGH PRESSURE RECEIVERS

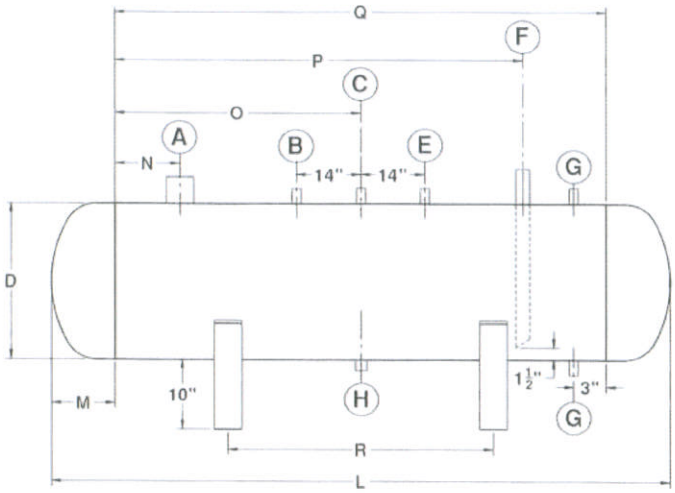

LEGEND

Nozzle	Description	Connection
A	Liquid Inlet	Stub
B	Purge	Coupling
C	Relief	Coupling
E	Equalizer	Stub
F	Liquid Outlet	Stub
G	Level Column	Stub
H	Drain	Coupling

MODEL #	A	B	C	D	E	F	G	H	L	M	N	O	P	Q	R	Weight (Lb)	Vol. (Cu. Ft.)	R-717 (Lb)
HR-20-110	1-1/2"	1/2"	1/2"	20"	3/4"	1"	3/4"	3/4"	110-3/4"	7-3/8"	3"	48"	78"	96"	55"	675	18.8	551
HR-20-134	1-1/2"	1/2"	1/2"	20"	3/4"	1"	3/4"	3/4"	134-3/4"	7-3/8"	3"	60"	102"	120"	67"	775	23.2	680
HR-24-136	2"	1/2"	3/4"	24"	3/4"	1-1/4"	3/4"	3/4"	136-1/2"	8-1/4"	3"	60"	102"	120"	68"	1340	33.0	967
HR-24-160	2"	1/2"	3/4"	24"	3/4"	1-1/4"	3/4"	3/4"	160-1/2"	8-1/4"	3"	72"	126"	144"	80"	1530	39.2	1148
HR-24-184	2"	1/2"	3/4"	24"	3/4"	1-1/4"	3/4"	3/4"	184-1/2"	8-1/4"	3"	84"	150"	168"	92"	1720	45.4	1330
HR-30-163	2-1/2"	1/2"	3/4"	30"	1"	1-1/4"	3/4"	3/4"	163-1/2"	9-3/4"	4"	72"	126"	144"	82"	1955	62.8	1840
HR-30-187	2-1/2"	1/2"	3/4"	30"	1"	1-1/4"	3/4"	3/4"	187-1/2"	9-3/4"	4"	84"	150"	168"	94"	2190	72.6	2127
HR-30-211	2-1/2"	1/2"	3/4"	30"	1"	1-1/4"	3/4"	3/4"	211-1/2"	9-3/4"	4"	96"	174"	192"	106"	2430	82.4	2414
HR-36-166	3"	1/2"	3/4"	36"	1"	1-1/2"	1"	3/4"	166-1/2"	11-1/4"	4"	72"	126"	144"	84"	3080	92.2	2701
HR-36-190	3"	1/2"	3/4"	36"	1"	1-1/2"	1"	3/4"	190-1/2"	11-1/4"	4"	84"	150"	168"	96"	3460	106.4	3117
HR-36-214	3"	1/2"	3/4"	36"	1"	1-1/2"	1"	3/4"	214-1/2"	11-1/4"	4"	96"	174"	192"	108"	3840	120.6	3533
HR-42-193	3"	1/2"	3/4"	42"	1-1/4"	1-1/2"	1"	3/4"	193-1/2"	12-3/4"	4"	84"	150"	168"	97"	4210	145.6	4265
HR-42-217	3"	1/2"	3/4"	42"	1-1/4"	1-1/2"	1"	3/4"	217-1/2"	12-3/4"	4"	96"	174"	192"	109"	4655	164.8	4828
HR-48-196	4"	1/2"	3/4"	48"	1-1/4"	2"	1"	3/4"	196-1/2"	14-1/4"	5"	84"	150"	168"	98"	6010	193.2	5660
HR-48-220	4"	1/2"	3/4"	48"	1-1/4"	2"	1"	3/4"	220-1/2"	14-1/4"	5"	96"	174"	192"	110"	6635	218.4	6398
HR-54-200	5"	3/4"	3/4"	54"	1-1/2"	2-1/2"	1"	1"	200"	16"	6"	84"	150"	168"	100"	5755	246.4	7218
HR-54-224	5"	3/4"	3/4"	54"	1-1/2"	2-1/2"	1"	1"	224"	16"	6"	96"	174"	192"	112"	6340	278.2	8150
HR-60-203	6"	3/4"	3/4"	60"	1-1/2"	3"	1-1/4"	1"	203"	17-1/2"	6"	84"	150"	168"	102"	8125	307.0	8994
HR-60-227	6"	3/4"	3/4"	60"	1-1/2"	3"	1-1/4"	1"	227"	17-1/2"	6"	96"	174"	192"	114"	8935	346.2	10142
HR-60-251	6"	3/4"	3/4"	60"	1-1/2"	3"	1-1/4"	1"	251"	17-1/2"	6"	108"	198"	216"	126"	9740	385.4	11291
HR-72-233	8"	3/4"	1"	72"	2"	4"	1-1/4"	1"	233"	20-1/2"	8"	96"	174"	192"	117"	13200	509.4	14923
HR-72-257	8"	3/4"	1"	72"	2"	4"	1-1/4"	1"	257"	20-1/2"	8"	108"	198"	216"	129"	14365	566.0	16581
HR-72-281	8"	3/4"	1"	72"	2"	4"	1-1/4"	1"	281"	20-1/2"	8"	120"	222"	240"	141"	15530	622.6	18240
HR-84-239	10"	1"	1"	84"	2-1/2"	5"	1-1/4"	1"	239"	23-1/2"	10"	96"	174"	192"	120"	15920	705.8	20677
HR-84-263	10"	1"	1"	84"	2-1/2"	5"	1-1/4"	1"	263"	23-1/2"	10"	108"	198"	216"	132"	17275	782.8	22933
HR-84-287	10"	1"	1"	84"	2-1/2"	5"	1-1/4"	1"	287"	23-1/2"	10"	120"	222"	240"	144"	18630	859.8	25189
HR-96-244	10"	1"	1"	96"	3"	5"	1-1/4"	1"	244-1/2"	26-1/4"	10"	96"	174"	192"	122"	21770	938.8	27503
HR-96-268	10"	1"	1"	96"	3"	5"	1-1/4"	1"	268-1/2"	26-1/4"	10"	108"	198"	216"	135"	23580	1039.4	30450

Notes:

All dimensions and Nozzle sizes are given in inches.

Volume is given in total cubic feet of vessel

Capacity is based on R-717 with vessel 80% full at 96 deg. F

Please consult factory for certified drawings.

20" thru 48" vessels are designed for 300# DWP -20 +200 Design Temp. per ASME Section VIII, Div. 1

54" and larger vessels are designed for 250# DWP -20 +200 Design Temp. ASME Section VIII, Division 1

M&M Refrigeration, Inc. · 412 Railroad Avenue · PO Box 449 · Federalsburg, Maryland 21632 · Tel: 410.754.8005
Fax: 410.754.5813 · sales@mmrefrigeration.com · www.mmrefrigeration.com

STANDARD VERTICAL RECIRCULATOR BARE VESSEL

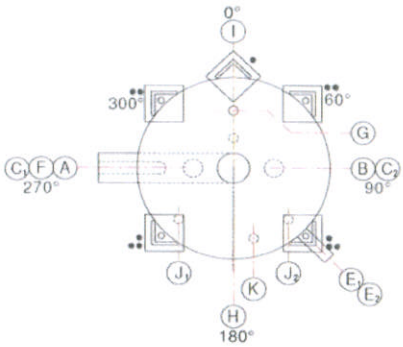

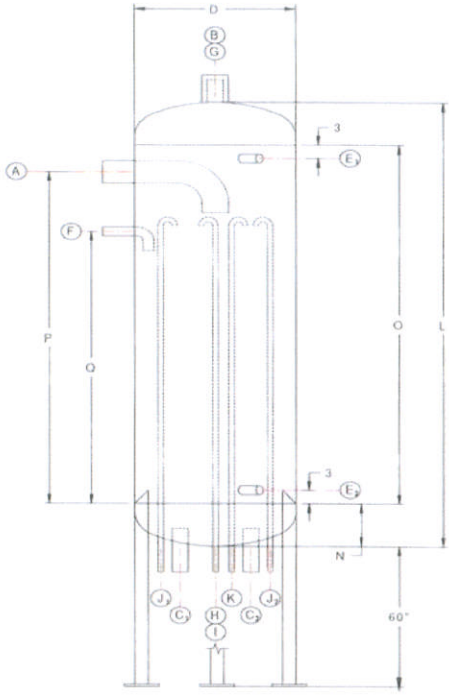

Nozzle	Description	Connection
A	Wet Return	Stub
B	Gas Outlet	Stub
C	Pump Suction	Stub
E	Float Column	Stub
F	Liquid Makeup	Stub
G	Relief	Coupling
H	Oil Drain	Stub
I	Oil Pot Vent	Coupling
J	Volute Vent	Stub
K	Liquid By-Pass	Stub
M	Pump Bleed	Stub

24" vessels have 3 legs (0 - 120 - 240)

30" and larger have 4 legs (45 - 135 - 225 - 315)

VERTICAL RECIRCULATOR DIMENSIONS

Model Numbe	A	B	C	D	E	F	G	H	I	J	K	L	N	O	P	Q	Surge Vol Cu. F	Wt. (Lb
VRC-24-112	5	4	2-1/2"	24"	1-1/2"	2"	3/4"	2"	3/4"	3/4"	1"	112-1/2"	8-1/4"	96"	90"	74"	14.99	1200
VRC-30-115	6	5	3"	30"	1-1/2"	2"	3/4"	2"	3/4"	3/4"	1-1/4"	115-1/2"	9-3/4"	96"	90"	74"	24.11	1475
VRC-36-118	6	6	4"	36"	1-1/2"	2"	3/4"	2"	3/4"	3/4"	1-1/4"	118-1/2"	11-1/4"	96"	90"	74"	35.08	2325
VRC-42-145	8	6	4"	42"	1-1/2"	2-1/2"	3/4"	2"	3/4"	3/4"	1-1/2"	145-1/2"	12-3/4"	120"	112"	94"	61.89	3200
VRC-48-148	8	8	5"	48"	1-1/2"	3"	3/4"	2"	3/4"	3/4"	1-1/2"	148-1/2"	14-1/4"	120"	112"	94"	81.33	4615
VRC-54-152	10	8	5"	54"	1-1/2"	3"	3/4"	2"	3/4"	3/4"	1-1/2"	152"	16"	120"	110"	91"	97.03	4420
VRC-60-155	10	8	5"	60	1-1/2"	3"	3/4"	2"	3/4"	3/4"	1-1/2"	155"	17-1/2"	120"	110"	91"	118.66	6140
VRC-72-161	12	10	6"	72"	1-1/2"	4"	1"	2"	3/4"	3/4"	1-1/2"	161"	20-1/2"	120"	108"	88"	161.53	9210
VRC-84-167	12	10	8"	84"	1-1/2"	4"	1"	2"	3/4"	3/4"	2"	167"	23-1/2"	120"	108"	88"	219.64	11175
VRC-96-172	14	12	8"	96"	1-1/2"	5"	1"	2"	3/4"	3/4"	2"	172-1/2"	26-1/4"	120"	106"	84"	266.47	15990

Notes:

All dimensions and Nozzle sizes are given in inches.

Please consult factory for certified drawings.

Surge volume is the amount of area between normal operating level and high level cutout.

24" thru 48" vessels are designed for 300# DWP -40 +200 Design Temp Per ASME Section VIII, Division 1

54" and larger vessels are designed for 250# DWP -40 +200 Design Temp Per ASME Section VIII, Division 1

VERTICAL RECIRCULATOR CAPACITIES

	OPERATING TEMPERATURE										
	TWO STAGE				SINGLE STAGE						
Model Numbe	-50	-40	-30	-20	-20	-10	0	+10	+20	+30	+40
VRC-24-112	51.9	64.3	77.8	92.1	80.1	92.7	105	120	134	147	149
VRC-30-115	82.1	102	123	145	126	147	166	189	213	234	251
VRC-36-118	117	146	176	209	181	210	237	271	305	334	359
VRC-42-145	161	200	242	287	249	288	326	372	418	459	492
VRC-48-148	212	263	318	376	327	379	428	490	549	603	647
VRC-54-152	270	334	405	478	416	481	544	623	698	767	822
VRC-60-155	334	414	501	593	516	597	674	771	865	950	1019
VRC-72-161	481	595	720	853	741	858	969	1109	1244	1366	1465
VRC-84-167	654	809	979	1159	1008	1167	1318	1508	1692	1858	1991
VRC-96-172	855	1056	1278	1513	1315	1522	1720	1968	2208	2425	2601

NOTES:

Capacities are given in tons of refrigeration. (R-717)

Two stage capacities are based on +35 deg. F liquid feed temperature.

Single stage capacities are based on +95 deg. F liquid feed temperature

M&M Refrigeration, Inc. · 412 Railroad Avenue · PO Box 449 · Federalsburg, Maryland 21632 · Tel: 410.754.8005
Fax: 410.754.5813 · sales@mmrefrigeration.com · www.mmrefrigeration.com

E70-610B SPC/SEP 2004

File: EQUIPMENT MANUAL - Section 70
Replaces: Nothing (new information)
Dist: 1, 1a, 1b, 1c, 4, 4b, 4c

RWF II

ROTARY SCREW COMPRESSOR UNITS
Models: 496 - 1080

FEATURES AND BENEFITS

RWF II Rotary Screw Compressor Units are engineered and manufactured to meet the exacting requirements of the Industrial Refrigeration Market. All components have been designed and arranged to assure reliability, accessibility, and servicing convenience. Standard units are designed for use as boosters or high-stage machines on ammonia or halocarbon refrigerants and are shipped completely assembled.

COMPRESSOR: The Frick manufactured **RWF II** compressor has been designed utilizing the latest technology to offer the most reliable and energy efficient unit currently available. Setup is easy thanks to the new D-flange connection on our low noise motor that is standard for the **RWF II**. All screw compressor casings are designed and tested in accordance with the requirements of ASHRAE 15 safety code. Rotors are manufactured from forged steel, and use the latest asymmetric profiles. The compressor incorporates a complete antifriction bearing design for reduced power consumption and the bearings selected provide an L10 life in excess of 100,000 hours at design conditions.

CAPACITY CONTROL: Capacity control is achieved by use of a slide valve which provides fully modulating capacity control from 100% to approximately 12% of full load.

"VOLUMIZER®" VARIABLE VOLUME RATIO CONTROL: The **RWF II** compressor includes a patented method of varying the internal volume ratio to match the system pressure ratio, eliminating the power penalty associated with over- or undercompression.

LUBRICATION SYSTEM: The **RWF II** compressor is designed specifically for operation without an oil pump. All oil required for main oil injection and lubrication is provided by positive gas differential pressure. All oil passes through the Frick SuperFilter™ II, specifically designed for increased particles capture and cleaner oil and compressor operation. SuperFilter™ II captures 99% of particles 5 microns and larger and has twice the dirt holding capacity of the original for maximum bearing life. It is also designed for horizontal mounting and furnished with isolation stop valves and drain connections for ease of servicing. Booster and some low-pressure differential, high-stage applications will require the demand oil pump option.

OIL SEPARATOR/RESERVOIR: The oil separator is a horizontal, three-stage design with integral sump. The separator is designed and constructed in accordance with ASME Section VIII, Div. 1 for a maximum design working pressure of 300 psig. Replaceable coalescent separator elements are provided for final gas/oil separation of particles down to less than 1 micron.

OIL COOLING: Cooling the compressor oil may be achieved by either EZ-Cool™ liquid-refrigerant-injection oil cooling, water-cooled oil cooling, or thermosyphon oil cooling. Water-cooled and thermosyphon oil-cooled systems are supplied with ASME plate and shell type heat exchangers mounted on the unit. They are also equipped with an oil temperature control valve.

QUANTUM™ LX CONTROL CENTER: The Quantum LX control panel is factory mounted, NEMA 4,UL ® listed, and completely wired with all the required safety and operating devices. A 10.4″ Active Color VGA Graphics Display offers a high contrast, crisp clear display of compressor information and status. Additional I/O can be easily installed in the field. This feature provides flexibility for future engine room upgrades and changes. Two field-selectable serial communication ports allow you to choose from a combination of RS-422, RS-485, or RS-232 port configurations for both interpanel and external communications. Ethernet communications are also available. Included in the micro-processor is time-proportioning capacity control, first-out annunciation, prealarms, volumizer control, real-time clock control, access code protection, lead-lag sequencing, alternate suction pressure operation, trending, and more. The operating conditions at the time of the compressor's last twenty alarms or shutdowns are stored in memory, providing the ultimate in service and troubleshooting convenience.

VALVES: The unit has a combination suction shut-off and check valve with strainer multivalve assembly. The unit's discharge has a mounted combination check and shut-off valve.

OPTIONAL FEATURES: Demand Oil Pump, Dual Oil Filters, Economizer, Oil Temperature Control Valve, Starter Packages, Unit-Mounted Solid-State Starter Packages, Power-Regulating Control Transformer, oversized Suction Valve.

STANDARD DESIGN DATA (with Metric equivalents) - NOMINAL @ 3550 RPM

MODEL NO.	COMPRESSOR DISPLACEMENT		RATINGS R-717 (1)(2)				RATINGS R-22 (1)(2)				UNIT WEIGHT (3)	
			CAPACITY		POWER		CAPACITY		POWER			
	CFM	M3/hr	TR	kw	BHP	kw	TR	kw	BHP	kw	lb	kg
496B	2,920	4,961	295	1,037	286	213	359	1,263	364	271	20,500	9,299
496H	2,920	4,961	1,054	3,706	1,182	881	946	3,328	1,178	878	NA	NA
676B	3,982	6,765	402	1,414	391	292	490	1,723	496	370	20,800	9,435
676H	3,982	6,765	1,422	5,002	1,612	1,202	1,206	4,241	1,615	1,204	NA	NA
856B	5,068	8,610	512	1,801	497	371	624	2,194	631	471	22,500	10,206
856H	5,068	8,610	1,807	6,354	2,056	1,533	1,511	5,315	2,165	1,615	NA	NA
1080B	6,394	10,862	645	2,268	629	469	787	2,769	902	673	23,100	10,478

1. Booster conditions are based on -40°F (-40°C) suction and 10°F (-12.2°C) intermediate temperature with liquid at interstage saturation and no superheat.
2. High stage conditions are based on 20°F(-6.7°C) suction and 95°F (35°C) condensing with 10°F (5.5°C) liquid subcooling and 10F(5.5C) superheat.
3. Unit weight does not include motor.
NOTE: All packages with motors larger than 1250 hp will require a vertical oil separator

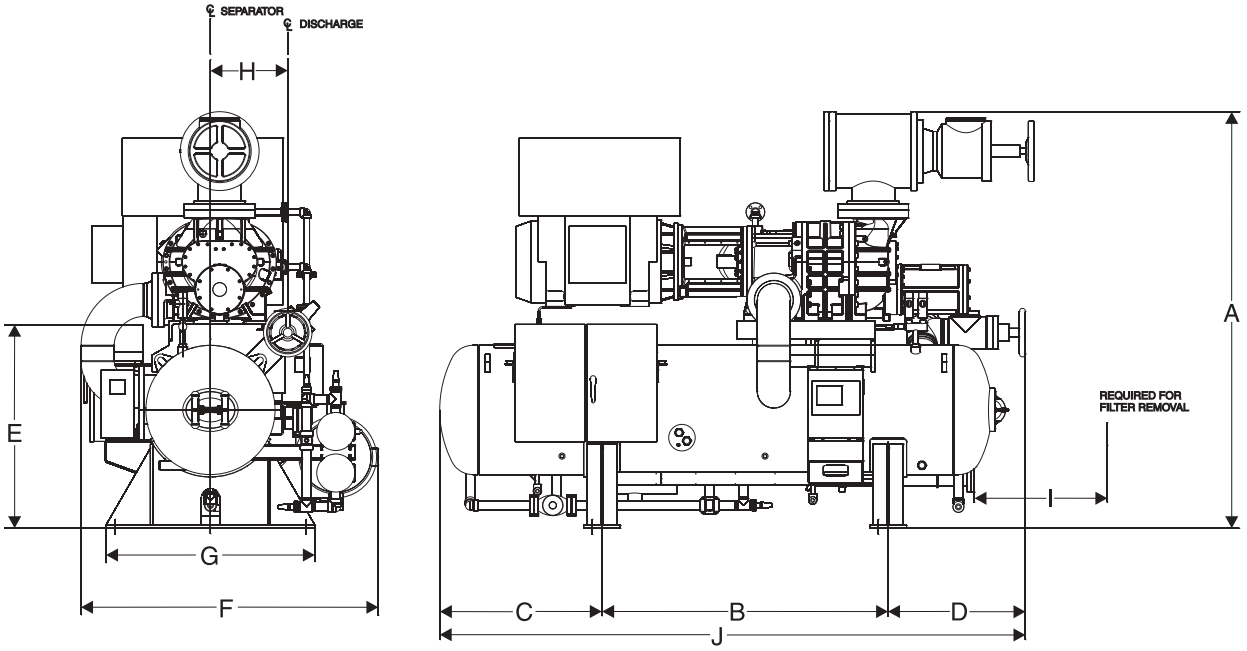

MODEL NO.	APPROXIMATE DIMENSIONS Inches/Millimeters									
	A	B	C	D	E	F	G	H	I	J
496	135/3440	93/2362	53/1340	45/1130	66/1682	97/2455	68/1727	25/638	39/991	191/4832
676	145/3675	96/2438	51/1302	49/1254	76/1930	103/2618	77/1956	26/666	39/991	196/4994
856	151/3834	96/2438	62/1572	50/1261	84/2128	109/2758	82/2083	28/720	39/991	208/5271
1080	151/3834	96/2438	62/1572	50/1261	84/2128	109/2758	82/2083	28/720	39/991	208/5271

NOTE: Graphic above for reference only. Other unit sizes vary slightly. Use only certified drawings for erection.

MODEL NO.	STANDARD CONNECTIONS in./mm			
	R-717		R-22	
	SUCTION	DISCHARGE	SUCTION	DISCHARGE
496	12/304.8	8/203.2	12/304.8	8/203.2
676	12/304.8	8/203.2	12/304.8	8/203.2
856	14/355.6	8/203.2	14/355.6	8/203.2
1080	14/355.6	8/203.2	14/355.6	8/203.2

Frick®
100 CV Avenue, P.O. Box 997
Waynesboro, Pennsylvania USA 17268-0997
Phone: 717-762-2121 • Fax: 717-762-8624 • www.frickcold.com
© 2004 YORK Refrigeration Systems

GEA
Refrigeration Division

Grasso

Grasso SP2 Series

Two-stage screw compressor packages

for industrial refrigeration

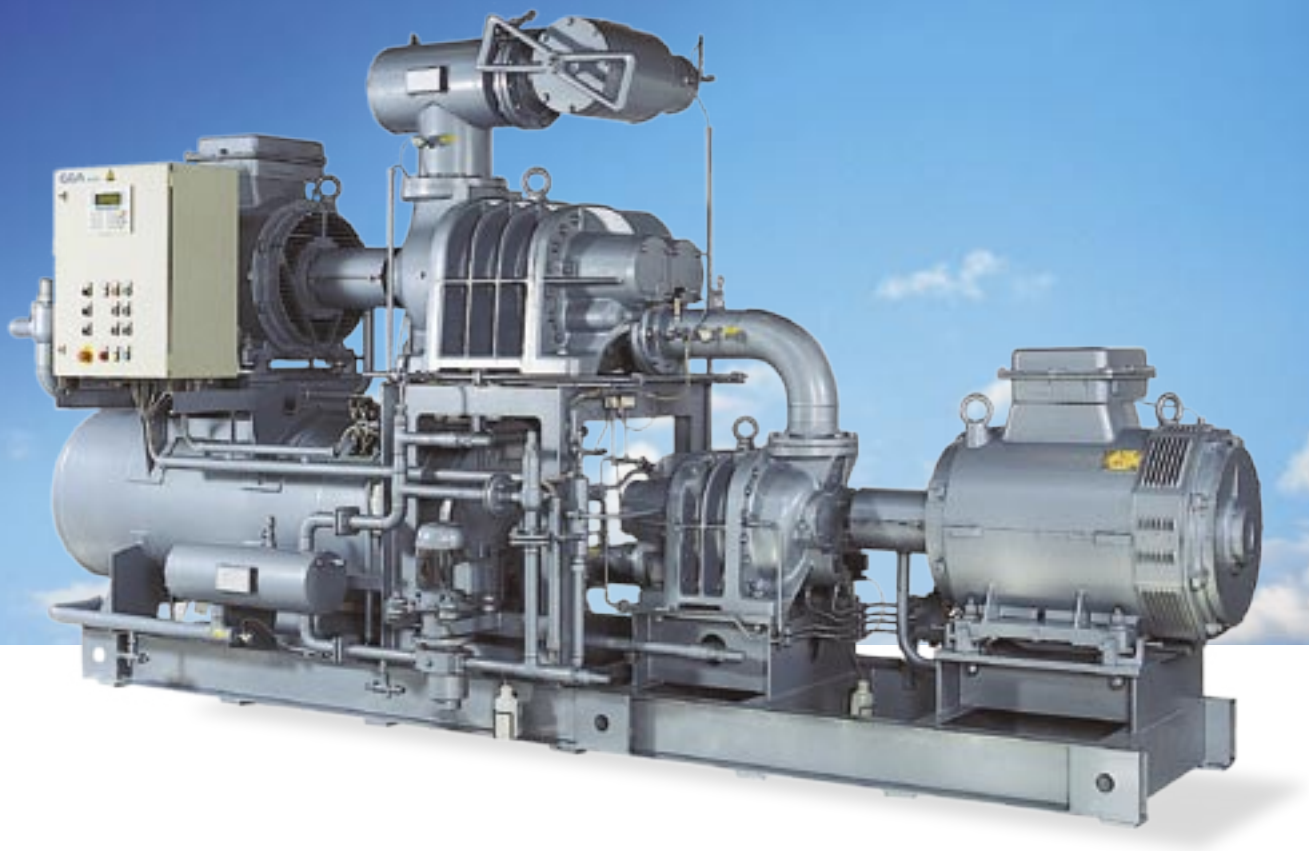

Grasso SP2

Product range

The entire programme of Grasso two-stage screw compressor packages contains 16 different basic models, using different booster compressors. Depending on refrigeration capacity required at intermediate temperature, a selection of compressors for the high pressure stage can be used. Due to this modular design, the capacity can be increased considerably, for less additional costs.

Features

- Low space requirement
- Compact and simple appearance due to the common oil supply system
- Optimized performance with two-stage operation and interstage cooling
- Exact adaptation to cooling capacity requirements through balanced selection programmes
- Unloaded start of both low- and high-pressure compressors
- Stepless capacity regulation
- Availability of additional intermediate cooling capacity due to the option of larger high-pressure compressors
- Stand-by facility through the individual operation of the high-pressure compressor

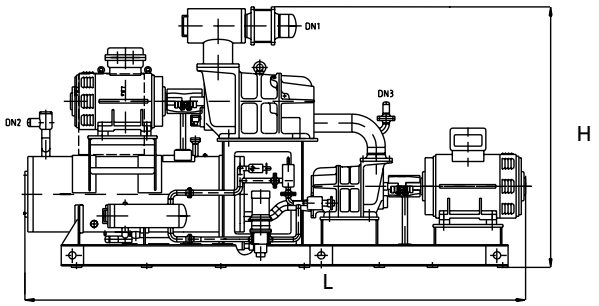

Standard package with Booster compressor type P to XC

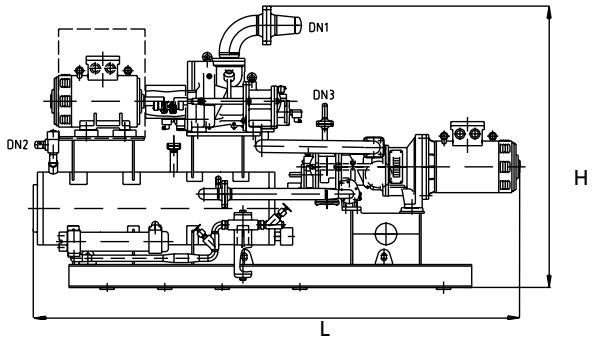

Standard package with Booster compressor type H, L, M, N

SP2 Package with Booster	Refrigeration Capacities (kW) at 2940 min^{-1}		Dimensions **) (mm)			Mass **) (kg)
	NH_3 *)-35/+35 °C	R404A *)-40/+35 °C	L	W	H	
H	119	116	3420 – 3790	1000	1970	2300
L	140	137	3420 – 3790	1000	1970	2400
M	176	170	3760 – 4130	1200	2150	3400
N	223	211	3760 – 4130	1200	2150	3600
P	209	197	3760 – 4130	1100	2150	2900
R	274	265	3760 – 4130	1200	2330	3100
S	341	330	4630 – 5110	1200	2400	3200
T	387	371	4630 – 5110	1200	2400	3350
V	458	427	4630 – 5110	1480	2530	3400
W	527	499	4630 – 5110	1480	2530	4000
Y	638	610	4630 – 5110	1480	2530	4200
Z	737	683	4630 – 5110	1480	2565	4400
XA	880	826	5500 – 5820	1660	2565	5950
XB	1094	987	5850 – 6600	1960	3250	9150
XC	1316	1224	5900 - 6650	2080	3250	11250
XD	1493	1340	6100 - 6830	2080	3250	13200

**) Capacity with interstage cooler **) Except for technical changes, Mass without motor*

Grasso Products b.v. • Parallelweg 27 • P.O. Box 343 • 5201 AH 's-Hertogenbosch • The Netherlands
Phone: +31 (0)73 - 6203 911 • Fax: +31 (0)73 - 6214 320 • E-Mail: products@grasso.nl

Grasso GmbH Refrigeration Technology • Holzhauser Straße 165 • 13509 Berlin • Germany
Phone: +49 (0)30 - 43 592 6 • Fax: +49 (0)30 - 43 592 777 • E-Mail: info@grasso.de

Find out more on our homepage www.grasso-global.com

TÜV CERT DIN EN ISO 9001 Certificate: 04 100 10414 Certificate: 01 100 80114

GEA Grasso
Refrigeration Division

A company of GEA Group

Please contact your office:

ca0349_Bro_SP2__gbr_03-06

Any data or other information in this brochure shall be deemed to be a general description of product properties and shall not be binding upon GEA. Binding product specifications may be agreed by GEA in bids, proposals, tenders or other offers issued in response to inquiries or calls for tenders or other invitations to bid.

AERO SYSTEMS ENGINEERING

PROJECT: P06151 – NASA GRC – Replacement of Refrigeration System for IRT, Bldg 9

CALCULATION PACKAGE: 5

TITLE: IRT HX Boiling

RESPONSIBLE ENGINEER Marksberry

APPROVED _____ DATE _____

REVISION	DATE	DESCRIPTION

	Submittal:	_____	Date:	_____
	Submittal:	_____	Date:	_____
	Submittal:	_____	Date:	_____
_____ Preliminary	Submittal:	_____	Date:	_____
_____ Final	Submittal:	_____	Date:	_____

ASE **Aero Systems Engineering, Inc**
358 East Fillmore Avenue
St. Paul, Minnesota 55107-1289 U.S.A.
Web: www.aerosysengr.com
Phone: +1-651-227-7515
Fax: +1-651-227-0519
E-mail: ASE@AeroSysEngr.com

In prior work, it had been assumed that the R134a boiling in the heat exchanger was properly designed for and that the heat exchanger performance would be so constrained by air side performance, that a change in refrigerant would not materially affect tunnel air cooling. In the current work, the above assumptions were tested by computing nominal boiling heat transfer within the existing heat exchanger for both R134a and R507A.

The 1997 ASHRAE Fundamentals was used as the definitive reference; specifically Chapter 4 “Two-Phase Flow”. Equation 2 from Table 2 was applied. Per that equation it was found that the refrigerant boiling heat transfer coefficient and thermal conductance was very high for both R134 and R507 as anticipated.

There are concerns, however, with both R507 and R134. Per ASHRAE at low mass velocity, less than 150,000 Btu/hr-ft2-ft2, the wavy flow boiling regime should be anticipated. The nominal liquid phase mass velocity is about 39000 for R134 and 53000 for R507. This is well within the wavy flow regime. In wavy flow, the fluid field separates in liquid only at the bottom of the tube and vapor only at the top of the tube. At higher quality, the flow pattern will transition to annular flow. The wavy flow regime will significantly reduce anticipated heat transfer rates since a significant portion of the tube perimeter will only have dry gas heat transfer rates and compared to high boiling type heat transfer coefficients.

From the perspective of wavy flow, the IRT heat exchanger was improperly designed. Once reason for this happening is that the R134a has a very low saturation pressure and vapor density. Thus, suction side pressure loss was probably a significant concern. For R507, serious consideration should be given to rearranging the flow route through the heat exchanger to try to get out of the wavy flow regime. A significant cost would incur. For example, instead of having 3/3/2 tube rows per pass for 2 passes, it might be desirable to have folded 3/3/2 arrangement. This doubles the mass velocity and will increases refrigerant pressure loss in the heat exchanger by about a factor of 8.

Note that the ASHRAE reference only had only equations specialized for R-12 and R-22 (or similar refrigerants) and did not have more general equations that include fundamental parameters such as surface tension and wall to fluid temperature difference. If additional work is desired, it will prudent to search for specialized equations for R134 and R507 or else apply a more general purpose boiling equation.

		R134A																		
			Heat Exchanger Flow								Flash Cooler Liquid Flash Flow				Economizer Flow					
Tons of Refrigeration (TR)	BTUh	BTU/lb	lbs/hr	lbs/min	Liquid Density (lbs / ft2)	Liquid Flow Rate (GPM)	Recirc Rate	Total HX Flow (lbs/min)	Total HX Flow (GPM)	Heat Capacity (btu/lb f)	Delta T	Btu/Lb	Load	Flow (lbs/min)	Delta T	Btu/Lb	Load	Flow (lb/min)	Suction Flow (lb/min)	Discharge Flow (lb/min)
600	7,200,000	92.8	77,586	1293.1	75.1	128.7	1.4	1810	180.2	0.341	55	74.045	1,455,129	328	85	63.815	2,818,448	736	1,621	2357
1200	14,400,000	92.8	155,172	2586.2	75.1	257.5	1.4	3621	360.4	0.341	55	74.045	2,910,259	655	85	63.815	5,636,896	1,472	3,241	4713
1600	19,200,000	92.8	206,897	3448.3	75.1	343.3	1.4	4828	480.6	0.341	55	74.045	3,880,345	873	85	63.815	7,515,862	1,963	4,322	6285
2100	25,200,000	92.8	271,552	4525.9	75.1	450.5	1.4	6336	630.8	0.341	55	74.045	5,092,953	1,146	85	63.815	9,864,569	2,576	5,672	8249

		R507																		
			Heat Exchanger Flow								Flash Cooler Liquid Flash Flow				Economizer Flow					
Tons of Refrigeration (TR)	BTUh	BTU/lb	lbs/hr	lbs/min	Liquid Density (lbs / ft2)	Liquid Flow Rate (GPM)	Recirc Rate	Total HX Flow (lbs/min)	Total HX Flow (GPM)	Heat Capacity (btu/lb f)	Delta T	Btu/Lb	Load	Flow (lbs/min)	Delta T	Btu/Lb	Load	Flow (lb/min)	Suction Flow (lb/min)	Discharge Flow (lb/min)
600	7,200,000	84.4	85,308	1421.8	65.4	162.7	1.4	1991	227.8	0.369	55	64.105	1,731,327	450	85	53.035	3,522,783	1,107	1,872	2979
1200	14,400,000	84.4	170,616	2843.6	65.4	325.4	1.4	3981	455.6	0.369	55	64.105	3,462,654	900	85	53.035	7,045,566	2,214	3,744	5958
1600	19,200,000	84.4	227,488	3791.5	65.4	433.9	1.4	5308	607.5	0.369	55	64.105	4,616,872	1,200	85	53.035	9,394,088	2,952	4,992	7944
2100	25,200,000	84.4	298,578	4976.3	65.4	569.5	1.4	6967	797.3	0.369	55	64.105	6,059,645	1,575	85	53.035	12,329,740	3,875	6,552	10426

Current System (No economizer)

		R134A																		
			Heat Exchanger Flow								Flash Cooler Liquid Flash Flow									
Tons of Refrigeration (TR)	BTUh	BTU/lb	lbs/hr	lbs/min	Liquid Density (lbs / ft2)	Liquid Flow Rate (GPM)	Recirc Rate	Total HX Flow (lbs/min)	Total HX Flow (GPM)	Heat Capacity (btu/lb f)	Delta T	Btu/Lb	Load	Flow (lbs/min)					Suction Flow (lb/min)	Discharge Flow (lb/min)
600	7,200,000	92.8	77,586	1293.1	75.1	128.7	1.4	1810	180.2	0.341	125	50.175	3,307,112	1,099					2,392	2392
1200	14,400,000	92.8	155,172	2586.2	75.1	257.5	1.4	3621	360.4	0.341	125	50.175	6,614,224	2,197					4,783	4783
1600	19,200,000	92.8	206,897	3448.3	75.1	343.3	1.4	4828	480.6	0.341	125	50.175	8,818,966	2,929					6,378	6378
2100	25,200,000	92.8	271,552	4525.9	75.1	450.5	1.4	6336	630.8	0.341	125	50.175	11,574,892	3,845					8,371	8371

AERO SYSTEMS ENGINEERING

PROJECT: P06151 – NASA GRC – Replacement of Refrigeration System for IRT, Bldg 9

CALCULATION PACKAGE: 4

TITLE: Large Piping Sizes

RESPONSIBLE ENGINEER Marksberry

APPROVED _____ DATE _____

REVISION	DATE	DESCRIPTION
1	March 5, 2007	Option 3 and Misc. Adjustments

Submittal: _____ Date: _____
Submittal: _____ Date: _____
Submittal: _____ Date: _____
_____ Preliminary Submittal: _____ Date: _____
_____ Final Submittal: _____ Date: _____

Aero Systems Engineering, Inc
358 East Fillmore Avenue
St. Paul, Minnesota 55107-1289 U.S.A.
Web: www.aerosysengr.com
Phone: +1-651-227-7515
Fax: +1-651-227-0519
E-mail: ASE@AeroSysEngr.com

JOB:	NASA GRC – Replacement Refrigeration System for IRT, Bldg 9				CODE/JOB NO.	P05151
COMPONENT:	Large Piping Sizes				REF:	
SUBJECT:	Scaling of Pipe					
Prepared By Marksberry	**Date** Feb. 26, 07	**Approved By**	**Date**	**Revised By**	**Date**	**Pkg.** 004 **Sht** 1 **Of**

Background

There are three basic refrigeration systems being evaluated for the IRT tunnel. It is necessary to do a cost evaluation which includes major ancillary equipment, piping and flow elements. The engineering development is on very conceptual basis, so the sizing and costs will be mainly relative to each other and to existing equipment.

Much of the following information will be come obsolete as work on the project proceeds. At the current moment, 2/19/2007, the process pass has been completed for Option 1, the R134a system, and has not really started for Options 2 and 3.

There are two distinct sections to this calculation. The first section relates to size and costing that occurs after the process analysis of the refrigeration system. The second is a general process analysis, done before specific process details from Sietech.

Post Sietech Process Analysis

The following is the process background for Option size and cost work. This information was developed from Sietech process information. As of Feb. 21, 2007 or so, consistent process information became available for all three options.

	A	B	C	D	E	F	G	H	I	J	K	L	M	N
1	Per 2/19/2007 Sietech Process Diagram Rev. 1													
2	**Option 1**	**lb/min**	**Quality**	**Qty**			**Flow Divisor**	**Flow per line**	**Psizing**	**T**	Density	**Assumed q**	**Diam**	**Diam**
3		**5,673**						**pps**	psia	F	lbm/ft3	psid	inches	inches
4	High Stage Discharge to Condensor (out of compressor to crossovcer)	8,249	Superheated Vapor	2	350 PSI	200 F	1	137.48	200	200	**3.37**	**0.25**	16.90	18
5	High Stage Discharge to Condensor (Downstream of cross-vover)	8,249	Superheated Vapor	2	350 PSI	200 F	2	68.74	200	200	**3.37**	**0.25**	11.95	12
6	High Stage Discharge Crossever	**4,125**	Superheated Vapor	2	350 PSI	200 F	2	34.37	200	200	**3.37**	**0.25**	8.45	**8**
7	Condensor to HP Receiver	8,249	Saturated Liquid	2	350 PSI	100 F	2	68.74	200	100	**72.38**	**0.25**	5.55	6
8	Condensor to HP Receiver	8,249	Saturated Liquid	2	350 PSI	100 F	1	137.48	200	100	**72.38**	**0.25**	7.85	8
9	HP Receiver to Economizer	8,249	Saturated Liquid	1	350 PSI	100 F	1	137.48	200	100	**72.38**	**0.25**	7.85	8
10	Economizer to Control Valve	5,672	Subcooled liquid	1	350 PSI	-20 to 20 F	1	94.53	200	0	**84.60**	**0.25**	6.26	6
11	Control Valve to Flash Cooler (size for vapor only)	5,672	80% Liquid/ 20% Vapor	1	150 PSI	0 to -65 F	5	18.91		-55	**0.11**	**0.075**	19.80	20
12	Flash Cooler to Pumps	**6,340**	Saturated Liquid	1	150 PSI	0 to -65 F	1	105.67		-55	**90.00**	**0.25**	6.52	**8**
13	Pumps to Heat Exchanger	**6,340**	Subcooled Liquid	1	150 PSI	0 to -65 F	1	105.67		-55	**90.00**	**0.25**	6.52	**8**
14	Heat Exchanger to Flash Cooler (size for vapor only)	**6,340**	30% Liquid/ 70% Vapor	1	150 PSI	0 to -65 F	1.43	73.97		-55	**0.11**	**0.075**	39.15	**40**
15	Flash Cooler to Low Stage Suction, Main 5672 tot -2836 leg	5672.00	Saturated Vapor	3	150 PSI	0 to -65 F	1	94.53		-55	**0.11**	**0.05**	48.99	48
16	Flash Cooler to Low Stage Suction, Leg 5672 tot -2836 leg	5672.00	Saturated Vapor	3	150 PSI	0 to -65 F	2	47.27		-55	**0.11**	**0.05**	34.64	36
17	Low Stage Discharge to Interstage 5672 tot -2836 leg	5672.00	Superheated Vapor	3	150 PSI	0 to 50 F	2	47.27	50	50	**1.03**	**0.25**	13.34	14
18	Interstage to High Stage Suction	8,249	Superheated Vapor	2	150 PSI	0 to 50 F	1	137.48	50	50	**1.03**	**0.25**	22.74	24
19	Economizer Outlet to Interstage	2,576	Superheated Vapor	1	150 PSI	-20 to 20 F	1	42.93	50	50	**1.03**	**0.25**	12.71	12
20	Liquid side of hot bypass	825	Superheated Vapor	1	350 PSI	200 F	1	13.75	200	200	**3.37**	**2**	3.18	4
21	Gas side of hot bypass	825	80% Liquid/ 20% Vapor	1	150 PSI	0 to -65 F	1	13.75		-55	**0.11**	**0.25**	12.49	12
22	Pumpdown line	100	Superheated Vapor	1			1	1.67	200	100	**72.38**	**0.5**	0.73	1
23	Cooling water (13500 gpm), will need drains, vents, freeze considerations	112522.5	Water	2	100psig	100F	2	937.69			62.4	**0.35**	19.55	20
24	Cooling water Main(13500 gpm), will need drains, vents, freeze considerations	112522.5	Water	1	100psig	100F	1	1875.38			62.4	**0.35**	27.65	28

Per Sietech Process Diagram																			
Option 2	**lb/min**	**Quality**			**Flow Divis**	**Flow per**	**Psizing**	**T**	Density	**Assumed q**	**Diam**	**Diam**	Quantity				Diam Circ 3,in	Diam Circ 3,in	
						pps	psia	F	lbm/ft3	psid	inches	inches	Circ 1	Circ 2		Circ 3	0.816497		
High Stage Discharge to Condensor	1,490	erheated V	350 PSI	200 F	1	24.83	200	200	**3.15**	**0.25**	7.30	8	3	3		2			
No Crossever																			
Condensor to Outlet Header	1,490	turated Liq	350 PSI	100 F	1	24.83	300	100	**61.50**	**0.25**	3.47	4	3	3		2			
Condensor Outlet header to HP	4,470	turated Liq	350 PSI	100 F	1	74.50	300	100	**61.50**	**0.25**	6.02	6	1	1		1	4.912782	6	
HP Receiver to Economizer	4,470	turated Liq	350 PSI	100 F	1	74.50	300	100	**61.50**	**0.25**	6.02	6	1	1		1	4.912782	6	
Economizer to Control Valve	2,810	bcooled liq	350 PSI	-20 to 20 F	1	46.83	300	0	**76.76**	**0.25**	4.51	6	1	1		1	3.685208	4	
Control Valve to Flash Cooler (size for	2,810	iquid/ 20%	150 PSI	0 to -65 F	5	9.37		-55	**0.32**	**0.075**	10.70	12	1	1		1	8.73473	10	
Flash Cooler to Pumps	2,990	turated Liq	150 PSI	0 to -65 F	1	49.83		-55	**82.53**	**0.25**	4.57	6	1	1		1	3.733116	4	GPM
Pumps to Heat Exchanger	2,990	bcooled Liq	150 PSI	0 to -65 F	1	49.83		-55	**82.53**	**0.25**	4.57	6	1	1		1	3.733116	4	270.9809
Heat Exchanger to Flash Cooler (size for vapor only)	2,990	iquid/ 70%	150 PSI	0 to -65 F	1.43	34.88		-55	**0.32**	**0.075**	20.64	20	1	1		1	16.85644	18	
Flash Cooler to Low Stage Suction,	2820.00	turated Vap	150 PSI	0 to -65 F	1	47.00		-55	**0.32**	**0.05**	26.52	26	1	1		1	21.65353	22	
Flash Cooler to Low Stage Suction, Per compressor leg	940.00	turated Vap	150 PSI	0 to -65 F	1	15.67		-55	**0.32**	**0.05**	15.31	36	3	3		2			
Economizer Outlet to Interstage	1,660	erheated V	150 PSI	-20 to 20 F	1	27.67	50	50	**0.97**	**0.25**	10.34	10	1	1		1	8.442636	8	
Liquid side of hot bypass	825	erheated V	350 PSI	200 F	1	13.75	200	200	**3.15**	**2**	3.23	4	1	1		1	2.637018	4	
Gas side of hot bypass	825	iquid/ 20%	150 PSI	0 to -65 F	1	13.75		-55	**0.32**	**0.25**	9.59	12	1	1		1	7.832288	8	
Pumpdown line	100	erheated Vapor			1	1.67	300	100	**61.50**	**0.5**	0.76	1	1	1		1	0.617897	1	
Cooling water to condenser, will need drains, vents, freeze considerations	41675	Water	100psig	100F	1	694.58			62.4	**0.35**	16.83	**18**	3	3		2		10	
Cooling water Main(13000 gpm), will need drains, vents, freeze	108355	Water	100psig	100F	1	#####			62.4	**0.35**	27.13	**28**	1	1		1	22.15555	14	

Per 2/19/2007 Sietech Process Diagram												
Option 3	**lb/min**	**Quality**			**Flow Divisor**	**Flow per line**	**Psizing**	**T**	Density	**Assumed q**	**Diam**	**Diam**
						pps	psia	F	lbm/ft3	psid	inches	inches
High Stage Discharge to	2,085	Superheated Vapor	350 PSI	200 F	1	34.75	200	200	**3.15**	**0.25**	8.63	10
No Crossever												
Condensor to Outlet Header	2,085	Saturated Liquid	350 PSI	100 F	1	34.75	300	100	**61.50**	**0.25**	4.11	4
Condensor Outlet header to Economizer	2,085	Saturated Liquid	350 PSI	100 F	1	34.75	300	100	**61.50**	**0.25**	4.11	4
Economizer to Control Valve	1,310	Subcooled liquid	350 PSI	-20 to 20 F	1	21.83	300	0	**76.76**	**0.25**	3.08	4
Control Valve to Brine Cooler (size for vapor only)	1,310	80% Liquid/ 20% Vapo	150 PSI	0 to -65 F	5	4.37		-55	**0.32**	**0.075**	7.30	8
Brine Cooler to Pumps (D-12)	88822.81	Liquid	150 PSI	0 to -65 F	1	1480.38		-55	**50.64**	**0.35**	25.88	26
Pumps to Heat Exchanger (D-	88822.81	Liquid	150 PSI	0 to -65 F	1	1480.38		-55	**50.64**	**0.35**	25.88	26
Heat Exchanger to Flash Cooler (D-12)	88822.81	Liquid	150 PSI	0 to -65 F	1	1480.38		-55	**50.64**	**0.35**	25.88	26
Flash Cooler to Low Stage	2820.00	Saturated Vapor	150 PSI	0 to -65 F	1	47.00		-55	**0.32**	**0.05**	26.52	26
Flash Cooler to Low Stage Suction, Per compressor leg	1310.00	Saturated Vapor	150 PSI	0 to -65 F	1	21.83		-55	**0.32**	**0.05**	18.08	18
Economizer Outlet to Interstage	775	Superheated Vapor	150 PSI	-20 to 20 F	1	12.92	50	50	**0.97**	**0.25**	7.07	8
Liquid side of hot bypass	250	Superheated Vapor	350 PSI	200 F	1	4.17	200	200	**3.15**	**2**	1.78	2
Gas side of hot bypass	250	80% Liquid/ 20% Vapo	150 PSI	0 to -65 F	1	4.17		-55	**0.32**	**0.25**	5.28	6
Pumpdown line	100	Superheated Vapor			1	1.67	300	100	**61.50**	**0.5**	0.76	1
Cooling water to condenser, will need drains, vents, freeze	29172.5	Water	100psig	100F	1	486.21			62.4	**0.5**	12.88	14
Cooling water Main(13500 gpm), will need drains, vents, freeze considerations	175035	Water	100psig	100F	1	2917.25			62.4	**0.35**	34.49	36
Expansion												
rho @ -50F, lbm/ft3	50.5											
rho @ 100F	46.8											
delta rho	1.07906											

	Scale Length	134a	Scale Diam							
		Length		Diameter	Diameter	Quantity				
		ft		ft	ft					
Flash Cooler /Brine Cooler	0	30	0.5625		**8**	1				
Suction Header	24.4	**30**	0.4375	4.2	4.5	1				
Receiver		30	0.625	6	6	1				
Condenser		6.5	0.4375	4.2	4.25	2				
Hi P Economizer (to mid-stage) (equivalent of 5 current)	6.94737	7	0.41926	4.02492	5.5	1				
		GPM		Rise, psid						
Liquid Pump		500		90						
		Option 2, Circs 1 and 2	Diam. Scale Factor	Option 2, Circs 1 and 2	Option 2, Circs 1 and 2	Option 2, Circ 3	Option 2, Circ 3	Option 2, Circ 3		
		Length	V=constai	Diameter	Quantity	Length	Diameter	Quantity		
		ft		ft		ft	ft			
Flash Cooler /Brine Cooler		8	0.40485	6	2	8	5	1		
Suction Header		8	0.42803	2.5	2	8	2	1		
Receiver		Sean	Sean	Sean	Sean	Sean	Sean	Sean		
Condenser		6.5	0.5	2.5	6	6.5	2.5	2		
Hi P Economizer (to mid-stage) (equivalent of 5 current)		7	0.57735	3.25	2	7	3.25	1		
		GPM		Rise, psid						
Liquid Pump		300		90	2			1		
		Option 3	Diam Scale factor	Option 3	Option 4					
		Length	V=constai	Diameter	Quantity					
		ft		ft						
Flash Cooler /Brine Cooler		8		4	6	Same as Condenser but lower density (pressure)				
Suction Header		None								
Receiver		None (maybe some expansion provision, but unlikely))								
Condenser		6.5	1.1547	3	6					
Hi P Economizer (to mid-stage) (equivalent of 5 current)		7	1.1547	3.25	6					
		GPM		Rise, psid						
Liquid Pump (D12)		13119		75						
		Lbs R-12		Length, ft		Diameter, ft				
Existing Storage Tank		60000		22		6				

Notes:

1. The immediatele available information was very limited for components sizing so nominal sizes were deduced from existing equipment to serve as place holders until such time more appropriate information is obtained. The sketches in the Operations manual was used extensively and it was assumed thant the various sketches were roughly in proportion. The following is simply a rational for picking initial values until more useful information becomes available. Note that much of this equipment is in common with all options so it is more important to be consistent between configurations.

2. Reciever: From the operating manual there was information on the original Freon 12 refrigerant storage facility was 6ft in diameter and 22 ft long. It was assumed that this could all of the liquid within the low pressure side of the refrigeration system and is now a bit too small for the current configuration. Furhtermore, the new configuration (assuming the HX is unchanged) will have greater liquid need. The high pressure reeiver has to nw perform nominally the same function so increased length from 22 ft to 30ft and use this for now. It is basically a pressure vessel. For Option 2 use same as Option 1 until we get info from Sean.

3. Flash Cooler: (Action get flash cooler volume info from GRC). Assuming a (as yet undefined) new flash cooler; it will not need very much liquid volume but still will a comparable gas volume and vapor phase pipe connections. Simply assume in coordination with Sean, for now, that the new flash cooler is 8ft in diameter. The flash cooler will have some internal baffles for flow separation and dampers for control. It and the suction header will have many penetrations.

4. Suction Header: A similar unit will be needed for comparable flow, so scale from Ops Manual. The suction header may have some internal gas separation structure. It will have many penetrations.

5. Condenser: Assume a new condenser. From Fig 2 of Ops manual deduce that gas inlets ifor the smaller condensers is about 4 inch (consistent with line sizinge xercise). The the condenser would be about 18 inch in diamter and the active length would be about 6.5ft long. Per Sean the equivalnet of 10 condensers is needed in 2 modules. Keep length and simply sacle diameter by square root of 5. This also roughly scales. It will be basically a gas to liquid shell and tube heat exchanger.

5. Economizer (condeser outlet): Essentially same flow as 1 (of 2) condensers with high potential heat transfer coefficients on both sides. Use condenser values.

7. Pump: Sperra intersection point was at 320gpm R-134a with 45 psia rise. FrigidCoil design basis was 400gpm. At 400gpm the load curve would intersect a 12 impeller at 75 psid rise. Given hx orifice issues and to be conservative pick about 500gpm and 90psid rise which would yield about a 35hp motor.

General Process Comparison (precedes Sietech Process Analysis)

Large common elements include the tunnel heat exchanger and the piping to and from the heat exchanger. A relative process comparison of the supply side and the suction side of the tunnel heat exchanger is provided in the table provided below.

	A	B	C	D	E	F	G	H	I
2			HX Design Basis	HX Design Basis but 60% Exit quality	Lo Temp R134a Design	Assumed Current System Design Basis	R507 System Design Basis - 65F	R507 System Design Basis - 55F	D12 System Design Basis - 55F
3									
4	Coolant to HX		"R134a"	"R134a"	"R134a"	"R134a"	"R507A"	"R507A"	D12
5	Heat Load @ -65F	tons/hr	1665.6	1665.6	1600	1600	1600	1600	1600
6		MW	5.858	5.858	5.627	5.627	5.627	5.627	5.627
7		Btu/sec	5552	5552	5333	5333	5333	5333	5333
8	Coolant Temperature	F	-18	-18	-65	-55	-65	-55	-55
9	Liquid Density	lbm/ft3	86.26	86.26	90.97	90.00	83.58	82.51	50.64
10	Sat. Pressure	psia	13.59	13.59	3.39	4.70	10.28	13.60	
11	Assumed Quality		0.756	0.6	0.6	0.6	0.6	0.6	
12	Computed Liquid Flow	pps	78.3	98.6	88.2	89.5	102.6	104.4	1480.4
13		gpm	407.2	513.1	435.0	446.1	550.6	567.7	13118.0
14	Suction Flow								
15	Vapor Density	lbm/ft3	0.305	0.305	0.083	0.113	0.249	0.324	50.644
16	Mixture density (theoretical -no slip)	lbm/ft3	0.403	0.507	0.138	0.188	0.415	0.539	50.644
17	Liquid viscosity	lbm/ft-sec	0.000	0.000	0.000	0.000	0.000	0.000	0.007
18	Inlet dP factor (137 @ -65) (w^1.8)*(mu^0.2)/rho		5.701	8.642	7.283	7.411	9.673	9.916	3763.5
19	Liquid Pressure Loss Ratio		0.783	1.187	1.000	1.018	1.328	1.361	516.7
20	Implied diameter change, ratio		0.950	1.036	1.000	1.004	1.061	1.066	3.675
21	Gas Viscosity	lbm/ft-sec	6.5E-06	6.5E-06	5.9E-06	6E-06	6.6E-06	6.8E-06	
22	Rough approx Inlet dP factor (137 @ -65) (w^1.8)*(mu^0.2)/rho		584.02	703.47	2066.70	1568.32	925.24	738.60	
23	Approx Suction Pressure Loss Ratio		0.3724	0.4486	1.3178	1.0000	0.5900	0.4709	2.3997
24	Implied diameter change, ratio		0.8140	0.8462	1.0592	1.0000	0.8959	0.8548	1.2000

The Column C is a reference condition which is consistent with the Frigid Coil Design Basis of the tunnel heat exchanger. That condition resulted in a relatively high quality of the two phase flow leaving the heat exchanger. The next column, D, is the same configuration adjusted for a lower quality, 0.6. The Column F is the assumed piping system design basis (-55F) using an exit quality of 0.6. This is presumed to be the same as for the new R134a refrigeration system option. Column E is the similar to Column F except that the design basis was set at -65F. As can be seen in the table, -65F, is a very low temperature for Refrigerant 134a. The saturation pressure is very low and the vapor density is correspondingly low.

Column G and H compares R507A refrigerant with R134a assuming -65F and -55F temperature levels, respectively. Column I is an evaluation of a secondary coolant scheme using Therminol D-12 as the coolant.

Heat Exchanger

The existing tube and plate was reviewed using generalized heat transfer data. More precise evaluation must be done by the heat exchanger vendor who will able to use proprietary data and algorithms in estimating performance.

In the mode of direct evaporation of refrigerant, the new 134a case should be comparable to the existing 134a configuration. The minimum coolant temperature will be limited to -55F or higher. Thus, at this level of review no modification of the heat exchanger should be required (please note comments on orifices below).

Now one can see from the table that R134a and R507A are quite similar fluids. Considering the exit states (at -55F and 0.6 quality) given in table within Columns F and H, the 507A flow is a little higher 104.4pps versus 89,5pps, but this is offset by 507 having a higher theoretical (no-slip) suction density, i.e.; 0.539 lbm/ft3 as compared to 0.188lbm/ft3. Thus, the coolant (boiling refrigerant) flow performance should be acceptable for either refrigerant.

A simplified calculation of nominal boiling heat transfer coefficient was made (Calculation 5) and it was found that the thermal conductance due to boiling of either fluid will be much greater than the tunnel convective conductance so overall thermal conductance will not be materially changed. Thus the thermal performance (that tunnel cooling and heat exchanger thermal effectiveness) should stay the same with 507A and has occurred for 134A. In this analysis, it was found that the flow is likely to be in the wavy flow regime.

In summary, the heat exchanger should not require any change for either 134A or 507A systems for comparable performance expectations.

An analysis, Calculation 3 (see calculation file for additional information), was made with flowing D-12 as a secondary coolant using the same design condition as the heat exchanger design point. The D-12 offers only sensible cooling so the flow has to be much higher. In order to accommodate the high flow, the heat exchanger has to be significantly reconfigured. The external manifolds have to be removed and the coolant flow has to be changed to a 4-pass cross-counter-flow arrangement. The flow orifices have to be completely removed. This coolant pressure loss through the heat exchanger will be in the range of 17 to 20 psid assuming -18F coolant. With -55F coolant the thermal performance will decrease a bit and the pressure loss will increase. This can be estimated. As a 4 pass counter-flow heat exchanger the temperature distribution of the air leaving the heat exchanger will approach the uniform distribution of a pure counter-flow heat exchanger.

In summary, the existing heat exchanger can be adapted to D-12 flow. Additional design work is required to resolve details. Only the matrix stays the same. The external liquid manifolds and piping have to be changed and the flow distribution orifices must be removed. The volumetric coolant flow and the coolant pressure drop will increase so the pump will be much different.

Heat Exchanger Flow Distribution Orifices

There is some concern that the existing flow orifices are too restrictive and change should be considered particularly at very low boiling temperatures and low exit flow quality. On a

comparison basis, however, there appears to be no reason to change orifices when switching from 134A to 507A. The orifices have to be removed for D-12.

Liquid Supply Lines

Assuming that the flowing pressure loss is proportional to Flow^$^{1.8}$*Viscosity^$^{0.2}$/Density (which is a fairly good approximation for friction dominated losses), then one can compute this factor for various cases to estimate expected changed in flow losses and/or line sizes. On the liquid side the factor is given by Line 18 in the table. Line 19 is ratio of the factor to a 134a baseline. Basically, one can see that 507A will have a relatively small effect on liquid line sizing. For equal pressure loss, the implied diameter increase is the ratio to 1/4.8 power which is provided by Line 20. From Line 20 the implied required line size change is small. Thus, one would expect to leave the liquid line the same and increase pump rise a bit (the pump pressure rise requirement would be dependent on postulated changes to flow distribution orifices).

The conclusion on regarding liquid lines would extend to all liquid refrigerant lines including sub-manifolds, etc.

The Therminol D -12 options (or any secondary coolant loop option) results in a large increase in liquid flow rate. Using the same rules, one would expect that the Therminol 12 lines will be 4 times larger (Line 20, Column I in the Table) than the liquid refrigerant lines. In more detailed analysis they will some degree of trade-off between line size and pump rise.

Return Lines

A similar type of comparison can be made on the low pressure side lines. It was assumed that the theoretical (no slip) mixture density would be suitable for comparison purposes. From Line 24 of the table, it can be seen that the diameter factor is less than one unless the 134A is at very low temperature. The two-phase flow return lines (and by implication the heat changer's boiling refrigerant pressure loss) will be usable for either 134A or 507A replacement options.

The Therminol D-12 return should be the same size as the supply as there is no significant change in density with the secondary coolant. One might very roughly expect that the D-12 supply and return line will be about 20% bigger in diameter that the exisitng 134A return line from the heat exchanger.

Line Lengths

The line lengths and sub-manifolding will have to be determined from plant layout arrangements. Routing should follow good practices, and the layout should be reviewed to note any changes that would result in significant pressure loss increases. For the lines passing two-phase flow, care must be taken to keep losses low and to following good practices for handling 2 phase flow. Of particular importance is control of slip and avoidance of separation of the two phases. Such analysis is a detailed design task.

Secondary Coolant heat Exchanger

The preliminary analysis of the heat exchanger with it flowing D-12 exceeds required performance by enough, that predicted performance may be sufficiently good enough to support the terminal temperature difference needed for selecting a coolant to refrigerant heat exchanger without a reduction in refrigerant temperature set-point (see Calculation 3).

Conclusion

Switching to 507A from 134A will have minimal impact on process piping and pipe flow elements. The exchanger and associated piping should be usable. The pump capacity should be increased for both refrigerants and the flow balancing orifice specification should be review for both refrigerants consistent with orifice flashing analysis and with the resizing of the pump.

The heat exchanger matrix should be adequate for the D-12 option. All supply and return piping and heat exchanger headers would have to be redone. The Thermin0l D-12 will require a much higher volumetric flow rate pump and one with a higher rise.

		R134A																		
			Heat Exchanger Flow								Flash Cooler Liquid Flash Flow				Economizer Flow					
Tons of Refrigeration (TR)	BTUh	BTU/lb	lbs/hr	lbs/min	Liquid Density (lbs / ft2)	Liquid Flow Rate (GPM)	Recirc Rate	Total HX Flow (lbs/min)	Total HX Flow (GPM)	Heat Capacity (btu/lb f)	Delta T	Btu/Lb	Load	Flow (lbs/min)	Delta T	Btu/Lb	Load	Flow (lb/min)	Suction Flow (lb/min)	Discharge Flow (lb/min)
600	7,200,000	92.8	77,586	1293.1	75.1	128.7	1.4	1810	180.2	0.341	55	74.045	1,455,129	328	85	63.815	2,818,448	736	1,621	2357
1200	14,400,000	92.8	155,172	2586.2	75.1	257.5	1.4	3621	360.4	0.341	55	74.045	2,910,259	655	85	63.815	5,636,896	1,472	3,241	4713
1600	19,200,000	92.8	206,897	3448.3	75.1	343.3	1.4	4828	480.6	0.341	55	74.045	3,880,345	873	85	63.815	7,515,862	1,963	4,322	6285
2100	25,200,000	92.8	271,552	4525.9	75.1	450.5	1.4	6336	630.8	0.341	55	74.045	5,092,953	1,146	85	63.815	9,864,569	2,576	5,672	8249

		R507																		
			Heat Exchanger Flow								Flash Cooler Liquid Flash Flow				Economizer Flow					
Tons of Refrigeration (TR)	BTUh	BTU/lb	lbs/hr	lbs/min	Liquid Density (lbs / ft2)	Liquid Flow Rate (GPM)	Recirc Rate	Total HX Flow (lbs/min)	Total HX Flow (GPM)	Heat Capacity (btu/lb f)	Delta T	Btu/Lb	Load	Flow (lbs/min)	Delta T	Btu/Lb	Load	Flow (lb/min)	Suction Flow (lb/min)	Discharge Flow (lb/min)
600	7,200,000	84.4	85,308	1421.8	65.4	162.7	1.4	1991	227.8	0.369	55	64.105	1,731,327	450	85	53.035	3,522,783	1,107	1,872	2979
1200	14,400,000	84.4	170,616	2843.6	65.4	325.4	1.4	3981	455.6	0.369	55	64.105	3,462,654	900	85	53.035	7,045,566	2,214	3,744	5958
1600	19,200,000	84.4	227,488	3791.5	65.4	433.9	1.4	5308	607.5	0.369	55	64.105	4,616,872	1,200	85	53.035	9,394,088	2,952	4,992	7944
2100	25,200,000	84.4	298,578	4976.3	65.4	569.5	1.4	6967	797.3	0.369	55	64.105	6,059,645	1,575	85	53.035	12,329,740	3,875	6,552	10426

Current System (No economizer)

		R134A																		
			Heat Exchanger Flow								Flash Cooler Liquid Flash Flow									
Tons of Refrigeration (TR)	BTUh	BTU/lb	lbs/hr	lbs/min	Liquid Density (lbs / ft2)	Liquid Flow Rate (GPM)	Recirc Rate	Total HX Flow (lbs/min)	Total HX Flow (GPM)	Heat Capacity (btu/lb f)	Delta T	Btu/Lb	Load	Flow (lbs/min)					Suction Flow (lb/min)	Discharge Flow (lb/min)
600	7,200,000	92.8	77,586	1293.1	75.1	128.7	1.4	1810	180.2	0.341	125	50.175	3,307,112	1,099					2,392	2392
1200	14,400,000	92.8	155,172	2586.2	75.1	257.5	1.4	3621	360.4	0.341	125	50.175	6,614,224	2,197					4,783	4783
1600	19,200,000	92.8	206,897	3448.3	75.1	343.3	1.4	4828	480.6	0.341	125	50.175	8,818,966	2,929					6,378	6378
2100	25,200,000	92.8	271,552	4525.9	75.1	450.5	1.4	6336	630.8	0.341	125	50.175	11,574,892	3,845					8,371	8371

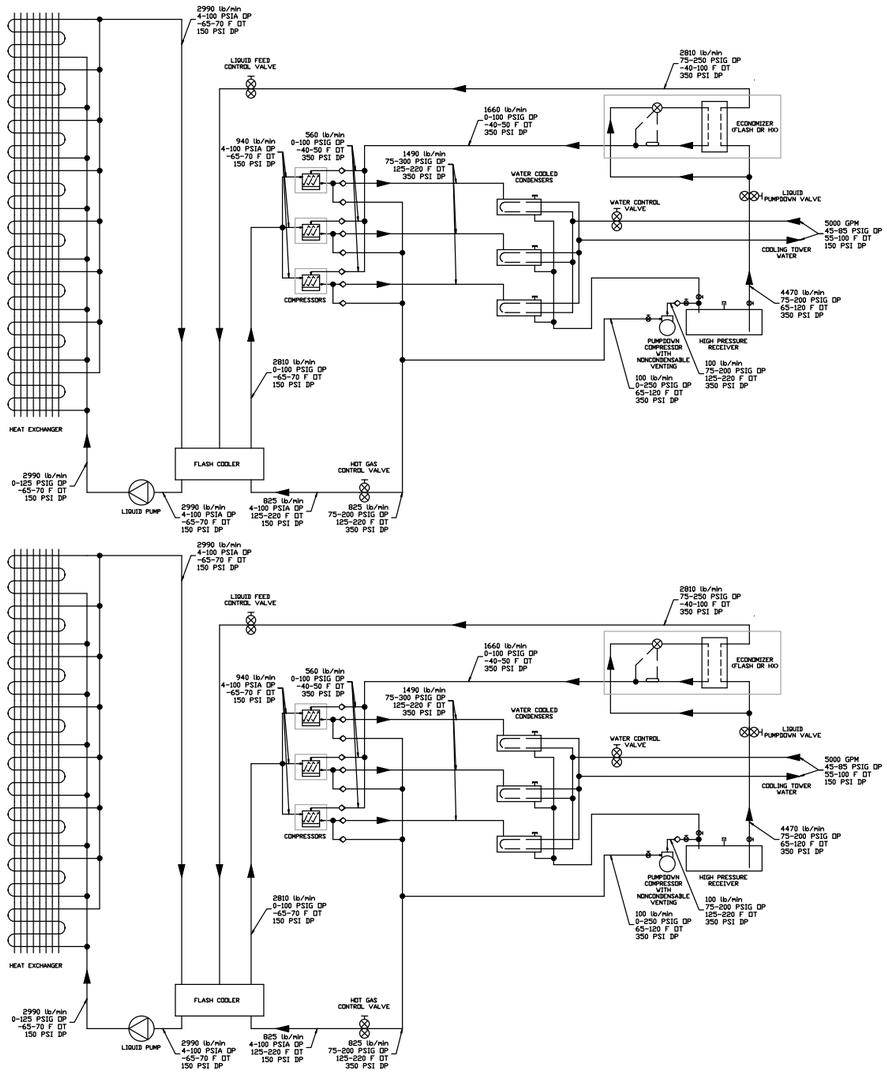

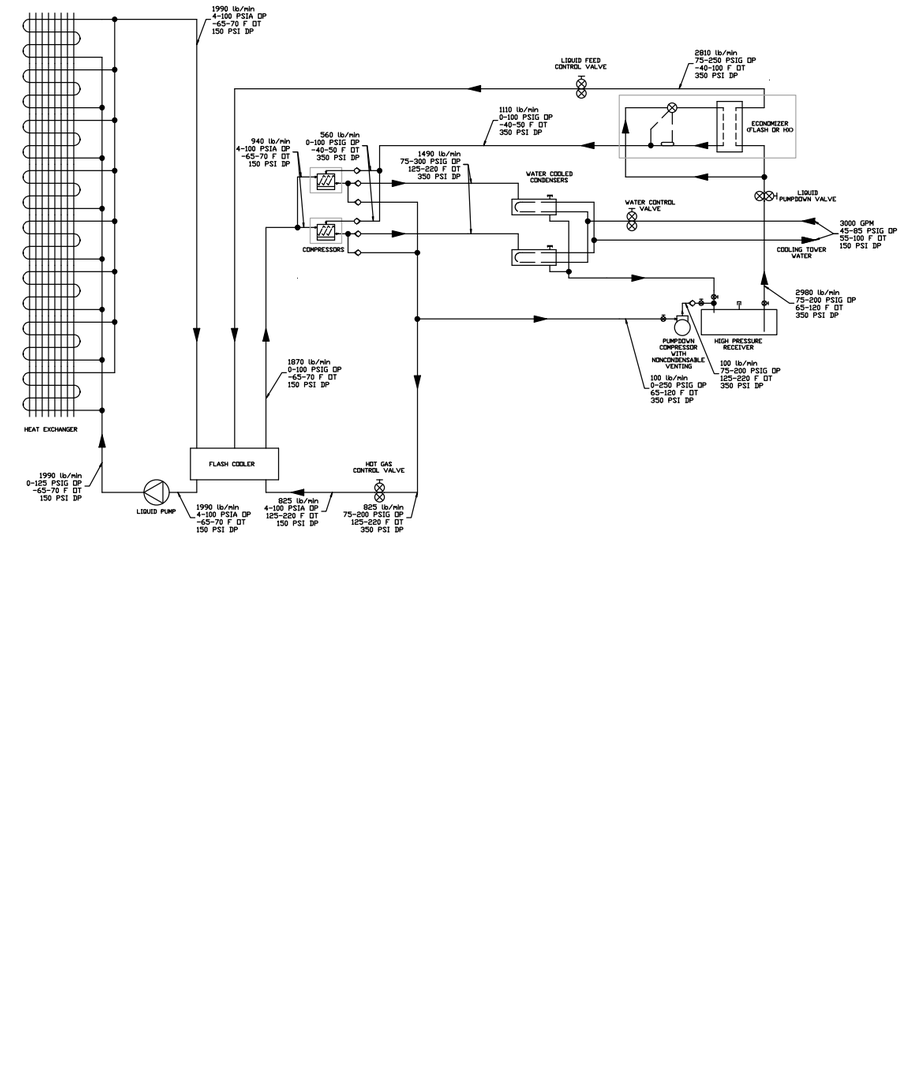

SieTech
Systems Integration and Engineering Technologies

SCREW PLANT PROCESS - OVERVIEW - (Option 2)

ENGINEER	DRAWN BY	DRAWING NO.
SPR		IRT-2
SCALE	DATE 02/19/07	

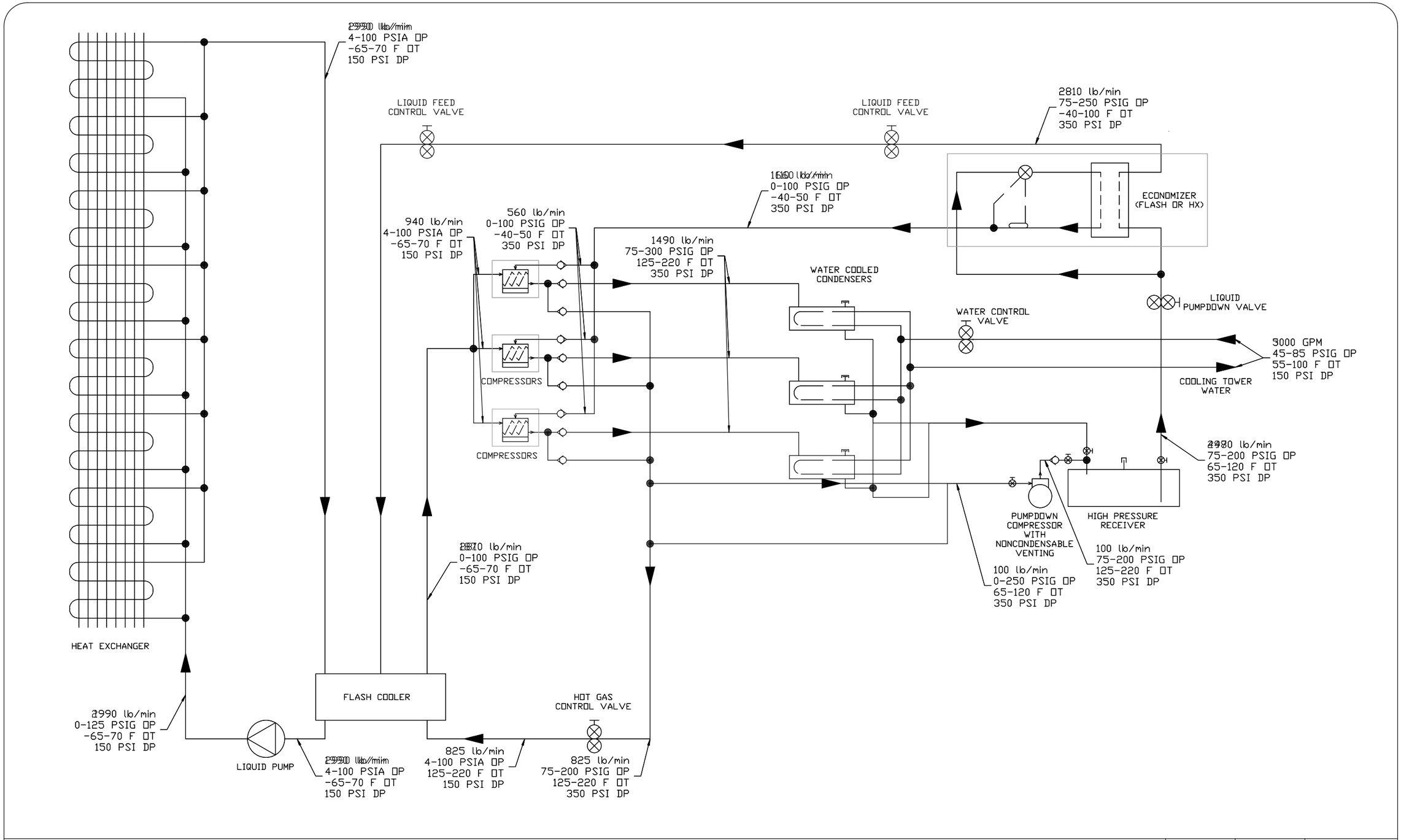

SieTech
Systems Integration and Engineering Technologies

SCREW PLANT PROCESS - 2 COMPRESSOR CIRCUIT - (Option 2)

ENGINEER	DRAWN BY	DRAWING NO.
SPR		IRT-3
SCALE	DATE 02/19/07	

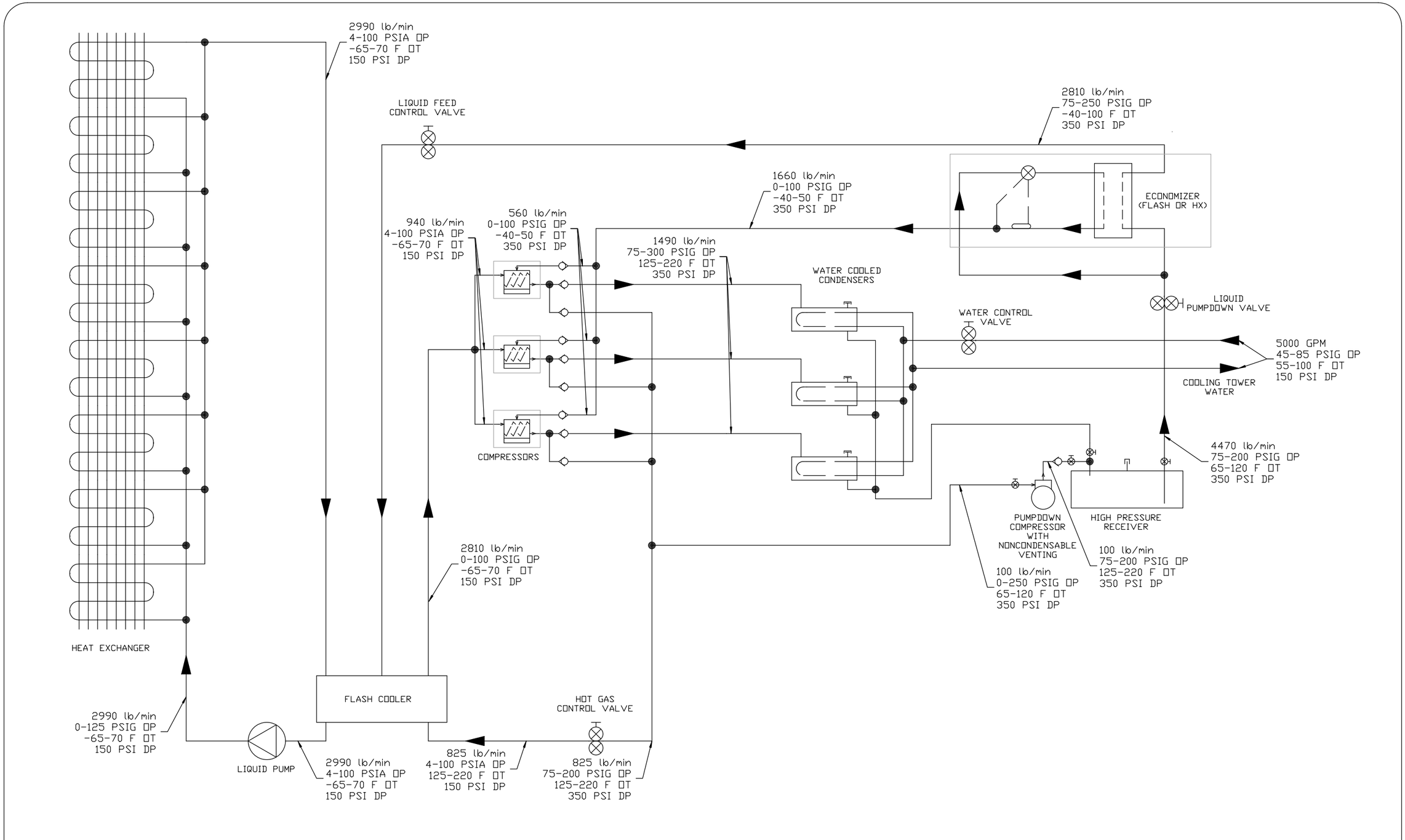

SieTech
Systems Integration and Engineering Technologies

SCREW PLANT PROCESS - 3 COMPRESSOR CIRCUIT - (Option 2)

ENGINEER	DRAWN BY	DRAWING NO.
SPR		IRT-4
SCALE	DATE 02/19/07	

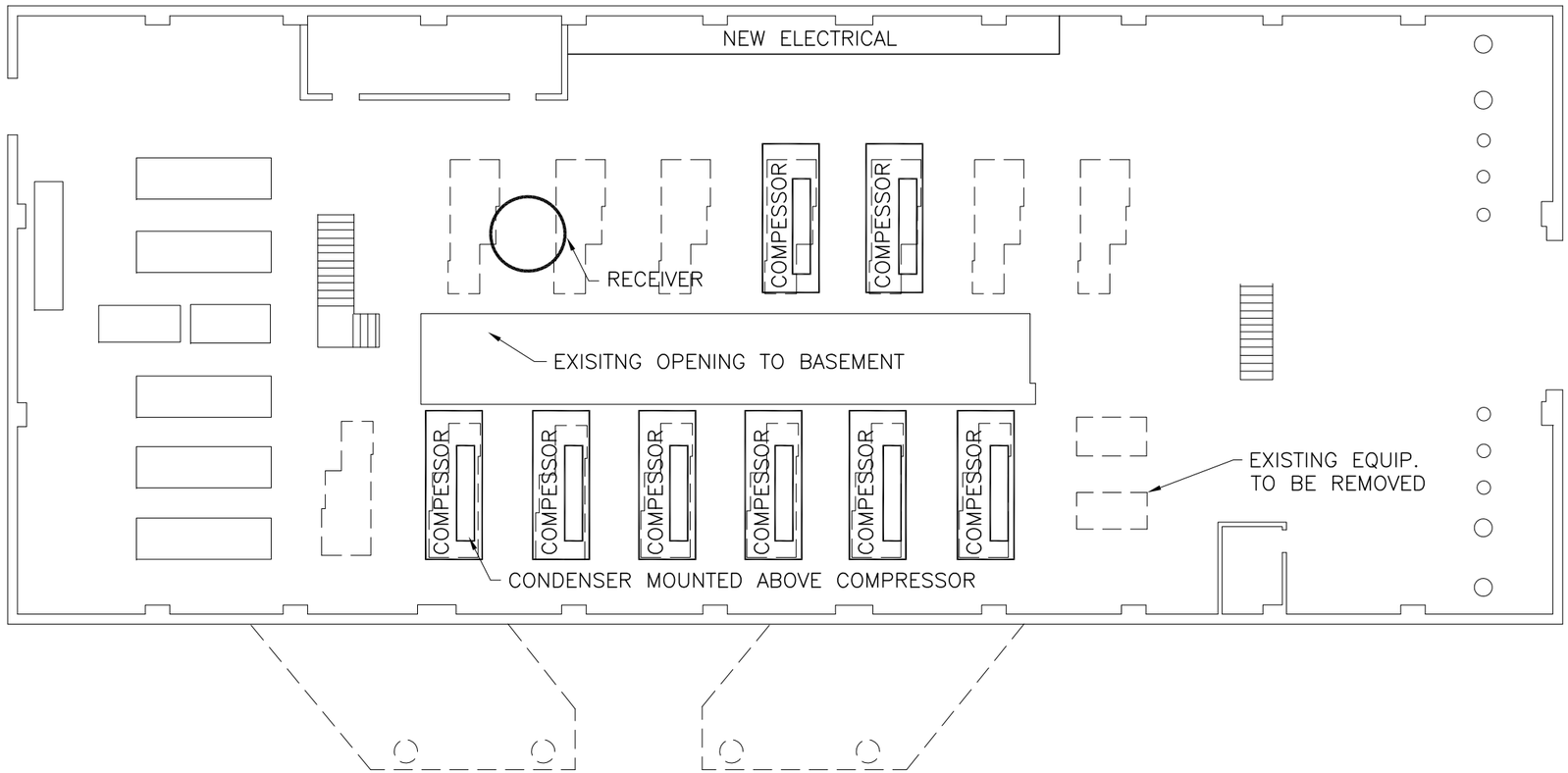

EXISTING BUILDING
FLOOR PLAN OPTION 2

1/16" = 1'-0"

Revision	Date

ASE
AERO SYSTEMS ENGINEERING

NASA GLENN RESEARCH CENTER
REPLACEMENT OF REFRIGERATION
SYTEM FOR THE IRT

Collaborative Design, Ltd.
Architects
2727 Tuller Parkway Suite 200
Dublin, Ohio 43017
Ph 614.798.5115 / Fax 614.798.5105

© 2007, Collaborative Design, Ltd.

Project Number
06074

Date
03-9-07

Scale
AS NOTED

File Name
AS-Dwg 102901 23842

Drawing Description

OPTION 2
EXISTING BLDG
FLOOR
PLAN

A5

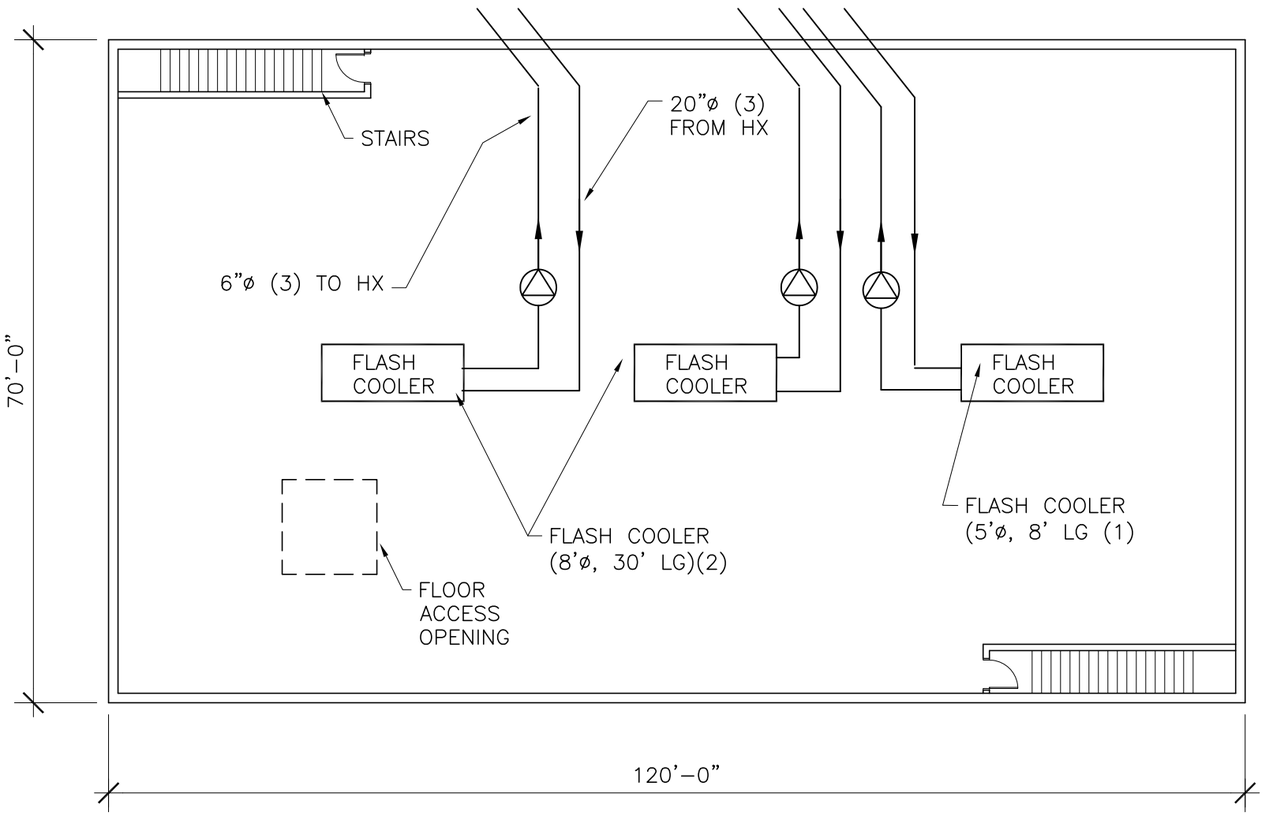

NEW BUILDING
BASEMENT PLAN OPTION 2

1/16" = 1'-0"

Revision	Date

AERO SYSTEMS ENGINEERING

NASA GLENN RESEARCH CENTER
REPLACEMENT OF REFRIGERATION
SYTEM FOR THE IRT

Collaborative Design, Ltd.
ARCHITECTS
2727 Tuller Parkway Suite 200
Dublin, Ohio 43017
Ph 614.798.5110 Fax 614.798.5105

© 2007, Collaborative Design, Ltd.

Project Number
06074

Date
03-9-07

Scale
AS NOTED

File Name
A1-Lvlmg 102781 23842

Drawing Description

NEW BLDG.
OPTION 2
BASEMENT
PLAN

A4

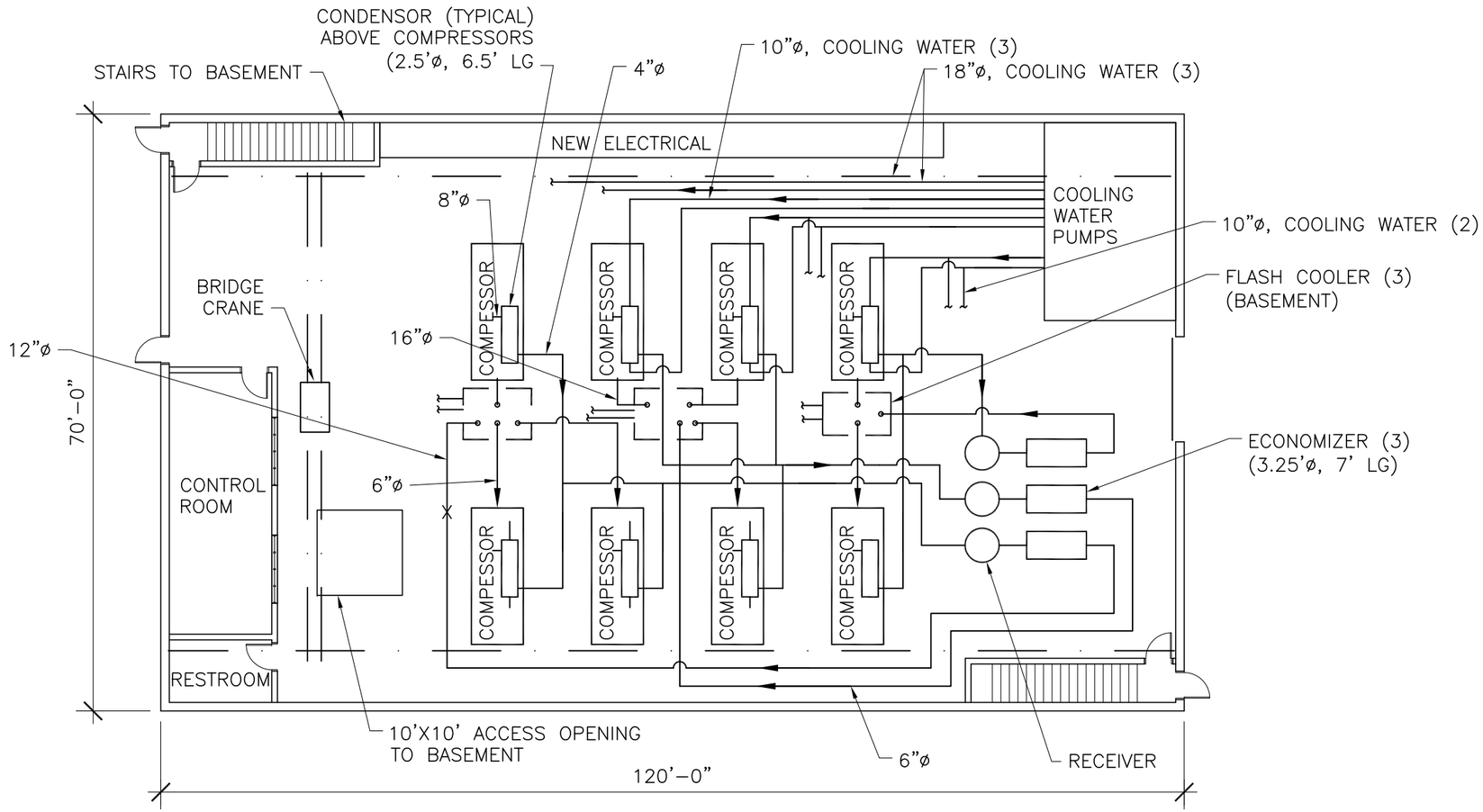

NEW BUILDING
FLOOR PLAN OPTION 2

1/16" = 1'-0"

Revision	Date

AERO SYSTEMS ENGINEERING

NASA GLENN RESEARCH CENTER
REPLACEMENT OF REFRIGERATION
SYTEM FOR THE IRT

Collaborative Design, Ltd.
Architects
2727 Tuller Parkway Suite 200
Dublin, Ohio 43017
Tel 614.798.5101 Fax 614.798.5105

©2007, Collaborative Design, Ltd.

Project Number
06074

Date
03-9-07

Scale
AS NOTED

File Name
A1-Lbmg 102901 23842

Drawing Description

OPTION 2
NEW BLDG.
FLOOR
PLAN

A3

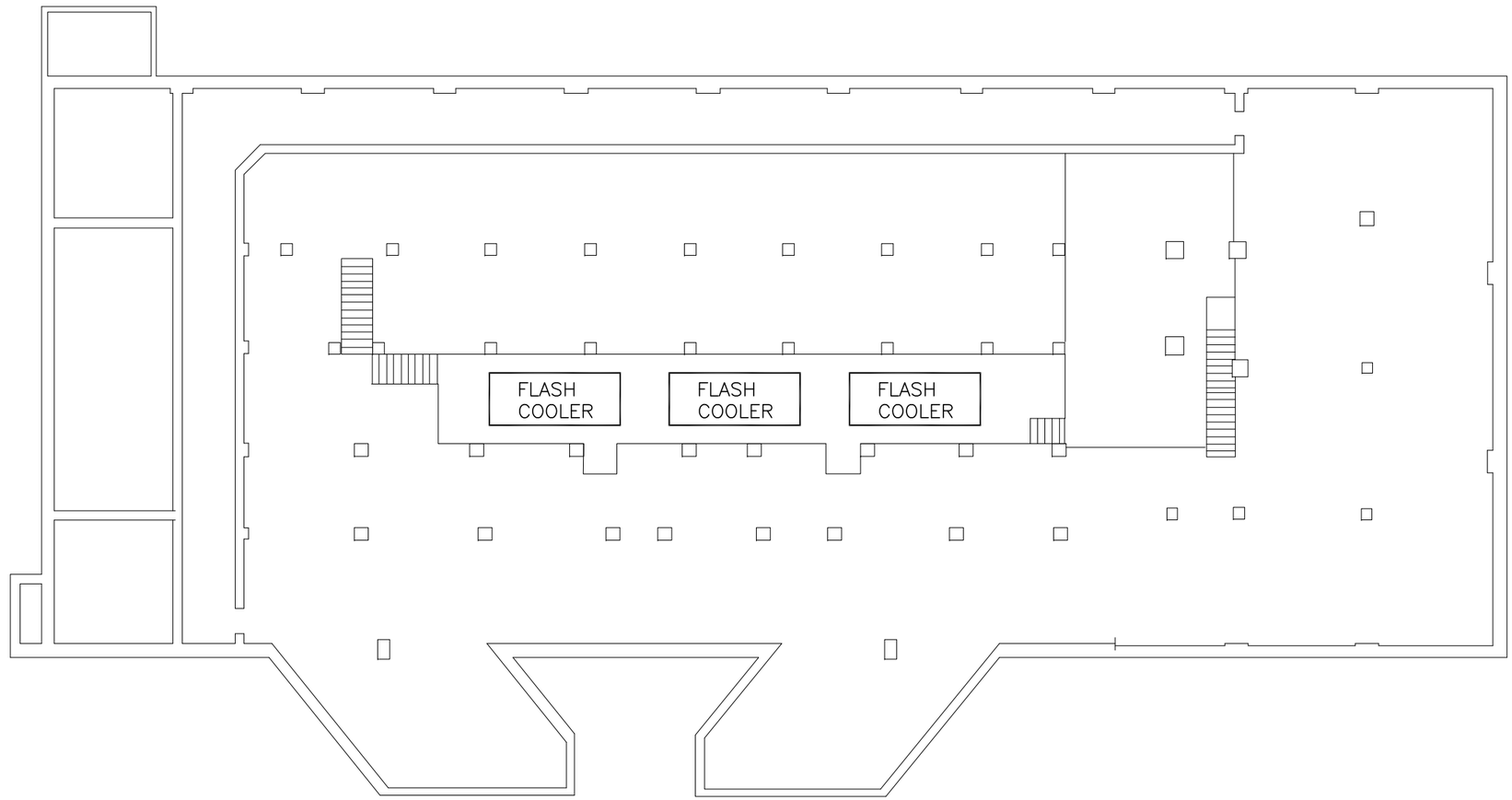

EXISTING BUILDING
BASEMENT PLAN OPTION 2

1/16" = 1'-0"

Revision	Date

AERO SYSTEMS ENGINEERING

NASA GLENN RESEARCH CENTER
REPLACEMENT OF REFRIGERATION
SYTEM FOR THE IRT

Collaborative Design, Ltd.
Architects
2727 Tuller Parkway Suite 200
Dublin, Ohio 43017
Tel 614.798.5110 Fax 614.798.5105

© 2007, Collaborative Design, Ltd.

Project Number
06074

Date
03-9-07

Scale
AS NOTED

File Name
A1-1.dwg 192191 23842

Drawing Description

OPTION 2
EXISTING BLDG
BASEMENT
PLAN

A6

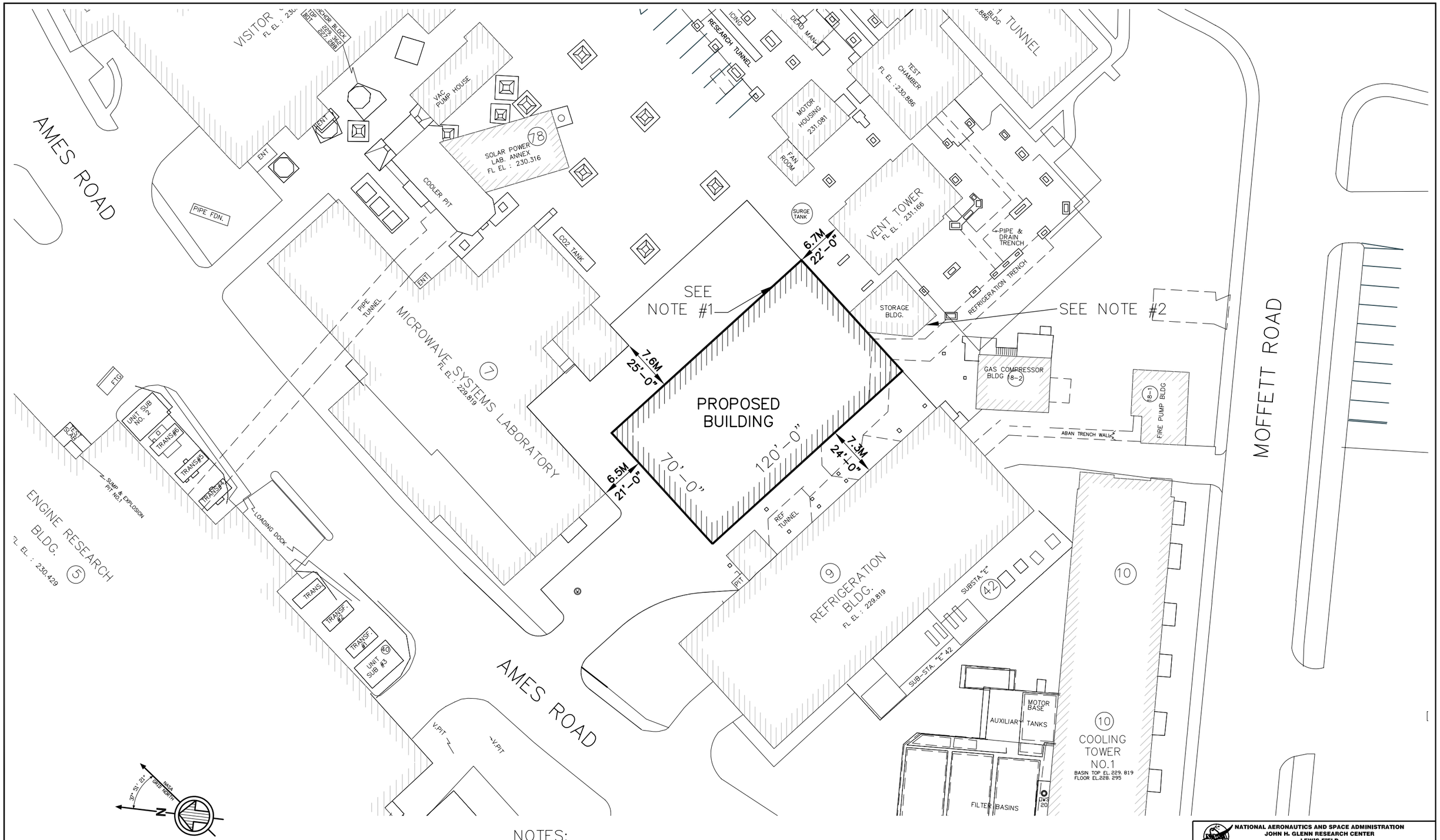

NOTES:

1. PROPOSED BUILDING FOR OPTIONS 2 & 3.
2. ASSUMES STORAGE BUILDING DEMOLITION WITH AWT DEMO PROJECT.

NATIONAL AERONAUTICS AND SPACE ADMINISTRATION
JOHN H. GLENN RESEARCH CENTER
LEWIS FIELD
CLEVELAND, OHIO

FIGURE CO1
Proposed Site Plan

UNITS: METRIC	SOFTWARE: AUTOCAD 2006	URS
SCALE: 1:500	OFFICIAL DATE: 03/07/2007	

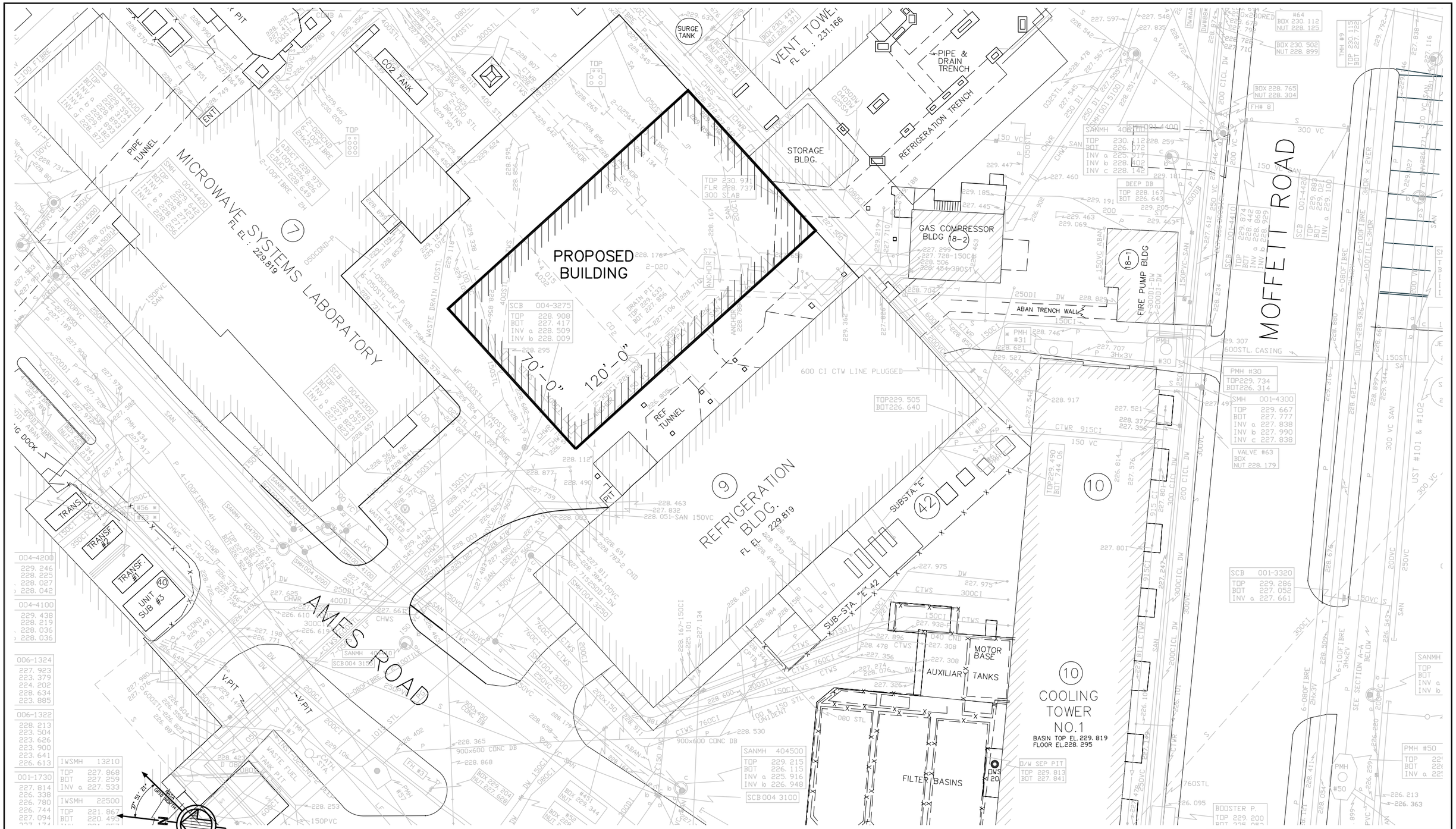

NOTES:

1. PROPOSED BUILDING FOR OPTIONS 2 & 3.

0 8m 16m 24m 32m 40m

GRAPHIC SCALE 1:400

NATIONAL AERONAUTICS AND SPACE ADMINISTRATION
JOHN H. GLENN RESEARCH CENTER
LEWIS FIELD
CLEVELAND, OHIO

FIGURE CO2
Proposed Site Plan
With Existing Utilities

UNITS: METRIC	SOFTWARE: AUTOCAD 2006	URS
SCALE: 1:400	OFFICIAL DATE: 03/07/2007	

E. Compressor Plant Option 3 – Secondary Fluid Plant

General Discussion

The third option selected would use a system of several chillers connected to a central fluid loop. Instead of refrigerant evaporating within in the HX, cooled fluid would provide the absorption capacity. The chillers would use similar compressors to the ones selected for option 2. This type of system is widely used in large process, environmental simulation equipment, and wind tunnels as well as commercial HVAC and refrigeration applications. These packages are relatively inexpensive and have the benefit of being self-contained.

Selection Criteria

R507 was chosen as the refrigerant for this option because of its availability, safety, environmental impact, good operational conditions, and azeotropic (doesn't separate during evaporation) nature. D12 was chosen as the secondary coolant because of familiarity. Given the low inlet pressure of the system, a 2-stage system is applicable, but some venders have single stage systems that will provide adequate performance. The compressors chosen for the concept are able to handle the required capacity with 5 single stage units. Because of the redundancy requirements this means a system having 6 compressor units.

Changes

Because no evaporation takes place within the HX, the flow rate must be much greater. This requires major changes to the heat exchanger. At a minimum, the orifices would need to be removed, the routing through the tubes would need to be changed, and the headers would need to be replaced. At the time of final design, evaluation should be given to replacement of the HX, as this may end up being more cost effective and allow for changes to the tunnel physics. This configuration would fit within the existing building, but because of the extended downtime required for the changeover in the same building a new building is recommended. Completely new piping would be required, but the specifications for that piping are much less stringent.

Heat Exchanger Replacement

The existing heat exchanger could have been used, but since it requires extensive modifications as noted above, a new heat exchanger is recommended. There will be some difference in transit performance compared to the existing system because of the thermal inertia of the cooling loop.

Equipment & Mechanical Piping

Option 3 utilizes a new building for 6 screw compressors, each with a condenser, economizer and chiller barrel, and related piping. A secondary cooling loop from the chiller barrels to the existing wind tunnel heat exchanger includes a liquid pump, expansion tank and 26 inch diameter piping. The equipment arrangement is shown on drawings A7 (Floor Plan) and A8 (Basement Plan). The basement contains liquid pump, chiller barrels, economizers, expansion tank and piping. The main floor is limited to the compressors, condensers and cooling water connections to the existing cooling water system.

This option requires replacement of the heat exchanger manifolds and heat exchanger header piping. The secondary coolant (Therminal D12) requires circuit flow changes to and from the heat exchanger modules. To accommodate this change, the existing heat exchanger modules will need to be removed from the wind tunnel, and new modules installed. Both the supply and return lines between the new building to the heat exchanger would be 26 inch diameter and would likely connect to the new heat exchanger modules along the top and bottom wall of the wind tunnel.

It is estimated that option 3 will require 5900 liquid gallons of R507 and 32,000 liquid gallons of D12 for the secondary cooling loop as determined in work package 16 of the cost estimate.

The sizes for the new equipment and the piping system diameters were determined in ASE's Calculation Package 4 and are also shown on the arrangement drawings. The detail cost sheets show the equipment and piping sizes together with bill of material list for piping components. The cost sheet bill of materials includes pipe runs, elbows, flanges, valves, supports and other relevant pipe components. As can be observed in the cost sheets, piping stresses for design pressures are computed for selected wall thicknesses, cold piping is insulated, all piping is painted and refrigerant/coolant volumes are computed as part of the cost roll up. Piping and vessel materials are assumed to be SA 106 Gr. B and SA 516 Gr. 70 respectively.

Design of the piping system would be per ASME B31.5 and design of the pressure vessels would be per ASME.

Environmental & Safety Related to Refrigerants

Refrigerant safety is evaluated using two factors: toxicity and flammability. A rating to describe these two factors is applied by the American Society of Heating, Refrigerating and Air-Conditioning Engineers (ASHRAE). The rating for R-134a and R-507 is A1 which is the highest safety rating possible. Class A indicates no evidence of toxicity below a concentration of 400 ppm. Class 1 indicates the refrigerant will not propagate a flame under normal conditions in open air.

The environmental impact of a refrigerant is evaluated using two factors: the Ozone Depletion Potential (ODP) and the Global Warming Potential (GWP). The ODP describes the potential for a single molecule of the refrigerant to destroy the ozone layer. All refrigerants are compared to R11 which has been assigned an ODP value of 1.0. The lower the ODP value, the better the refrigerant is for the ozone layer and the environment. The ODP for R-134a is 0; the ODP for R-507 is also 0. The GWP is a measurement (usually over a 100-year period) of how much effect a refrigerant will have on global warming in relation to carbon dioxide which is assigned a value of 1. The lower the GWP, the better the refrigerant is for the environment. The GWP for R-134a is 1,300; the GWP for R-507 is 3,300.

In summary, both refrigerants have the same safety rating so there is no difference between them. Both R-134a and R-507 have the same ODP of 0. The GWP for R-134a is about 3 times lower than that of R-507. Therefore, refrigerant R-134a can be considered slightly better than R-507 in terms of lower environmental impacts.

Controls

Each of the compressors will have its own supervisory control system. These systems will need to be integrated with the existing IRT control system to provide the overall plant control. The design and commissioning teams will provide the IRT staff a detailed control description, and will work with them to debug and tune the system.

The primary control point for the system would be fluid supply temperature and the setpoint would automatically be derived from air temperature control requirements. The system could automatically add and remove chiller packages from operation as the load changes.

The control of this system would be achieved by the adjustment of slide valves in the compressors. This reduces volume swept by the compressor screws and reduces the capacity. Depending on the design, hot gas or a fluid-to-fluid heat exchanger (with the cooling tower water) could also be incorporated. If reduced capacity were required for a long duration, compressor packages would be sequenced off to save energy and allow the remaining packages to run under more optimal conditions. Additional control could be achieved by regulating the speed of the individual chiller pumps.

Shut Down

Each compressor package will have incorporate pump-down controls capable of transferring the refrigerant charge into the high pressure receiver, oil separator, condenser, and other associated components. Once in the pump-down state, the system could be valved off and powered down for extended periods.

Energy Efficiency

Secondary cooling is less efficient than direct refrigeration because of the extra temperature delta across the chiller barrels. This efficiency loss could be mitigated by a different HX design that allows a closer approach between air temperature and fluid temperature. Also, some efficiency gains are created from the short line lengths and low system pressure losses. The overall efficiency should be within 5 to 10% of option 2.

Reliability

Chillers have much more stable operating conditions than direct refrigeration, placing less strain on the system components. The refrigeration components are concentrated in a relatively small area and therefore the occurrence of leaks is reduced to nearly zero. The compressors themselves have the same reliability characteristics as option 2, only they operate in a lighter duty situation. Chillers are often specified with a life span of around 20 years. For the relatively low duty needed for the IRT, the life span should be much longer.

Operation and Maintenance

The primary maintenance items for a secondary coolant plant are compressor inspection, oil system maintenance, filter maintenance, cooling water system maintenance, refrigeration recharging, bearing service, and leak detection and repair. This is quite dependant on the final installation and operation, but it would be reasonable to assume 1 man day per compressor per month for preventative maintenance and 1.5 man week per compressor per year for repairs.

Impact to Research

It is anticipated that this option would require approximately 10 months of downtime for the changeover.

Afterwards, recalibration could be needed when the HX is replaced or the modifications impact the airflow in anyway. There is a possibility that some changes will occur to the operation of the wind tunnel as a result of the change in fluid characteristics. This system allows a much wider range of solid control than a recirculated liquid system. In fact with the proper choice of coolant fluid, conditions above ambient could be achieved. There is no good indication that this option will improve the ice erosion issue. With an optional new HX, the opportunity for a reconfiguration of the thermal and aerodynamic properties of the tunnel does exist.

Design details

- R507 refrigerant
- D12 secondary coolant
- Secondary coolant system
- Example Compressor Configuration – 6 compressors (capacity can be achieved with 5 operating)
- Example Compressor: Frick RWF II 676

Changes

- New building
- New chiller packages (6)
- New fluid pumps (2)
- New fluid expansion tank
- New water-cooled condensers (6)
- New electrical distribution
- New cooling tower water piping
- Updated control system
- Modification of HX passes and headers

Benefits

- Excellent capacity control range
- Greater control over process characteristics
- Better isolation of the refrigeration system from the tunnel
- Operation of the HX in a vacuum is eliminated
- Maintenance skill set is more readily available
- Good redundancy
- Operational temperature range is extended
- Amount of refrigerant needed is much less than other systems

Limitations

- Downtime is expected to be 6 or 13 months. 6 months of a new building, 13 months for reuse of existing building.
- New building is recommended for this option
- R507 is more costly than R134a
- Significant changes in system piping, HX, etc
- Slightly increased energy use due to the fluid to refrigerant HX

Additional Notes

1. There is a possibility that the existing condensers could be reused depending on their condition and the final design. This would need to be determined at the time of design.
2. The possibility exists that ammonia or R22 could be used in the system, but are not recommended.

New Building Requirements

A new building is being proposed of this option. The building will be approximately 70 feet x 120 feet with a pipe tunnel level. The tunnel level will be used for piping to connect to the HX. The building height (approx. 26 feet) is anticipated to be similar to the existing building to allow for a bridge crane to install and maintain the compressors.

It is anticipated that the new buildings tunnel level will require access to the existing piping tunnels going to the Heat Exchanger.

The building will need to be designed per the International Building Code that has been adopted by the Federal Government.

Building use group F-2 (factory use)
Construction Type 2B (non combustible construction)
Fully Sprinkled (wet sprinkler system for fire protection)
2 means of egress minimum
Fire Alarm system
Plumbing for a new restroom
General ventilation and heating
General lighting and power

It is anticipated the building will be constructed with a concrete foundation, Lower level and floor slab. The building walls will masonry with a steel roof structure.

Access to the building would be from the west for equipment installation and maintenance.

Existing building option

It is possible to reuse the existing building. It would result in a longer downtime for the IRT but would provide a possible cost savings of approximately $ 2,453,529.00. The savings are related to site, environmental and building cost. The saving is less than the cost of a new building since the existing building will require modifications structurally. The extent of the structural modifications are unknown. The structural analysis of the existing building was not included in the scope of this study.

Site

This section provides for initial input and concerns regarding the construction of a new building in the area of the proposed demolition of the AWT building. See drawings C01 and C02 for proposed conceptual site plan and utilities. Figure C01 is the proposed site plan showing proposed pavements and C02 shows the existing

utilities. The proposed site plan development must consider the following constraints:

- Existing Building Setbacks
- Site Demolition
- Pavement
- Grading
- Storm Water Management
- Utilities

The new building is proposed to be constructed just north of Building 9 (The Refrigeration Building) between Building 7 and the Ventilation Tower Building. The building has been place to be approximately 20' off of each of these buildings. The placement assumes that the existing storage building is being demolished with the AWT. The current layout is constraining permitting only a 20' dimension between the existing buildings.

Site Demolition is predominantly being performed prior to this project with the proposed demolition of the AWT Building. Minor portions of site demolition should be included in the development of a new building except for the existing utilities which is further discussed below. Also, existing building foundations should be considered as part of the demolition costs associated with the construction of a building with a basement. The current demolition project only removes the foundations encountered to approximately three (3) feet below grade as indicated by NASA.

The proposed pavement for the new building will be designed to accommodate maintenance and housed equipment. Both walks and vehicular access along with parking will be designed to accommodate equipment maintenance, personnel requirements and the building requirements. The existing site pavement adjacent to Building 7 is in disrepair and requires reconstruction and has been included in the cost estimate.

The general site topography is relatively flat and will not be a constraining item during design. Grades based upon drawings provided by NASA range in elevation from 228 m to 231 m. Proposed grading will be based upon existing building finished floors and accessed pavements while maintaining positive drainage. Unless direct access to the basement or loading dock is required for maintenance, it is likely that no retaining walls will be necessary.

The proposed build layout must consider storm water management as a general construction permit (NOI) is required for sites disturbing more than one (1) acre. A Storm Water Pollution Prevention Plan (SWPPP) will be required and prepared in accordance with NASA's General Storm Water Plan (SWMP). This includes Best Management Practices (BMPs) during construction (Erosion Control Measures) and post-construction (Water Quality).

The existing utilities as shown in Figure C02 and are based upon NASA's Lewis Automated mapping System (LAMS) and include only underground utilities. For this study it is assumed that the existing utilizes are not being removed or relocated with the AWT demolition project. The existing utilities identified within the proposed building footprint are as follows:

14. Storm Sewers (S)
15. Sanitary Sewers (SAN)
16. Domestic Water (DW)
17. Chilled Water Service and Return Lines (CHWS)(CHWR)
18. Cooling Tower Water Service and Return Lines (CTWS)(CTWR)
19. Power/Electrical Service (P)
20. Telephone (T)
21. Steam Lines (ST)
22. Carbon Dioxide Lines (CO2)
23. Combustible Air (COMB A)
24. Service Air (SA)
25. Gas (G)
26. Other Unidentified Lines

The existing utilities encountered with the proposed building footprint must be either abandoned or re-directed in accordance with or as directed by NASA but for purposes of cost estimating it is assumed that all existing utilities are to be relocated. In addition to the existing relocated utilities the building will be service by proposed utilities including but not limited to power/electrical, telephone/communications, sanitary sewer, gas, steam, storm sewer and water service (DW, CWWS/CHRS and CTWS/CTWR).

Structural

See Option 3 building plans for building size and layout. See general structural design criteria in Section H.

- For Option 3, a new building with a basement will be constructed adjacent to the existing refrigeration building.
- The first floor will be at grade level and will be a concrete slab on either steel or concrete framing.
- The basement will have cast-in-place concrete walls and floor slab. It could be either a full or partial basement depending on piping and equipment requirements. If phasing and scheduling permits, the basement of the existing refrigeration could be used for new equipment and connected to the basement of the new building.
- Minimizing the size of the new building's basement may be desirable to minimize removal of existing foundations within the footprint of the new building.
- The new building will be provided with an overhead traveling bridge crane.

- Various access holes, equipment pads, and equipment and pipe supports will need to be provided both within the building and between the new building and the existing building and the IRT building.
- The building's superstructure will most likely be a steel skeleton with steel columns to support the crane runway and steel roof trusses or joists. The building's skin could be masonry to match existing buildings or metal panels to reduce costs.

HVAC & Plumbing

The new building would have heat for the winter months and general ventilation for the remaining seasons. It is anticipated the control room would be air conditioned.

Ventilation required with the type and quantity of refrigerants will need to be reviewed when the final design is completed. It is possible that refrigerant leak detectors will be required and additional ventilation.

A restroom, water coolers, floor drains and utility sinks as required by the building code will be the limited amount of plumbing. The will require sanitary and domestic water routed to the building.

Electrical

Background Information

Substation "E" consists of two (2) 10/12.5 MVA (million volt-amperes), 34.5-2.4 kV (kilovolt) transformers that are used to power Building #9, (IRT Refrigeration). These transformers have secondary ratings of 3,000-amps at 2.4-kV. Five (5) 2.4-kV 1200-amp bus configurations are used to distribute power to the various machines fed from this substation. Two of the bus are fed from one transformer and three bus from the other. A 3,000-amp tie breaker can be closed to power both bus arrangements in the event that one transformer is out-of-service; however, the maximum load capable of being operated under this condition is limited to 3,000-amps.

Building #9 (Existing IRT Refrigeration Building) contains approximately 18,000-horsepower of connected electrical equipment. In addition to IRT equipment, the 2.4-kV bus distribution also powers approximately 2662-horsepower of equipment located in the Natural Gas Compressor Building (Bldg #18-2), Fire Pump Building (Bldg #18-1), and Central Air Conditioning System.

Electrical load distribution for the five (5) 2.4 kV bus systems are roughly subdivided as follows:

bus WE1 feeds Central Air Conditioning System (1037-horsepower), Natural Gas Compressor Building (1500-horsepower)
bus WE2 feeds 3,000-horsepower of compressors, 900-horsepower of miscellaneous loads, and 125-horsepower of Fire Pumps
bus WE3 feeds 3,000-horsepower of compressors and 400-horsepower of miscellaneous loads
bus WE4 feeds 4,500-horsepower of compressors and 800-horsepower of miscellaneous loads
bus WE5 feeds 1,500-horsepower of compressors (with a spare 1,500-horsepower feeder that is no longer in use) and 1,235-horsepower of miscellaneous loads

Electrical Requirements

Option 3 includes six (6) 3,000 horsepower screw compressors to be installed in a new building. The existing 2400 volt distribution system can not handle compressors this large and would require a new electrical distribution system. With the new building to house this option, a new 2400 volt electrical distribution system would be included with its design.

Initial costs and O&M costs

The IRT Construction Cost Estimate provides a cost summary and cost estimate details, including breakdowns and supporting pipe wall thickness calculations for the individual Work Packages.

Cost estimate details developed by ASE include vendor quotes, cost for similar equipment used on other projects and information extracted from the Richardson Cost Estimating Manual.

The three work packages containing the piping estimates have detail spread sheets that are bill of material based. Thus pipe run lengths, number of elbows, valves etc are priced individually. Each piping components has material, labor and installation costs; in most cases, Richardson has one entry for material and installed labor. The pipe diameters on the detail spread sheets are determined in ASE Calculation Package 4. The mass flow rates used in these calculations are consistent with those on the Process Drawings. The piping and equipment arrangement used in the pricing is consistent with that shown on the building/equipment arrangement drawings.

The O&M costs are a yearly estimate. The energy estimates were generated using generic HP/Ton efficiency ratings for the various systems and warm/cool cooling water temperatures. An energy cost of $0.05 per kWh was used as the basis. Refrigerant expenses were included separately for comparison to the existing system, but other fluids (oil, D-12, etc) are included in the maintenance budget. A cost factor of $3/Lb for R134A and $9/Lb for R507 was used. The maintenance calculations are based on percentage of purchase estimates adjusted to the duty and usage.

Operation Costs per year

Energy

	Refrigeration Capacity	Minimum HP/Ton	Maximum HP/Ton	Required Comp HP	Pump HP	Total HP	KW	KW Load	Runtime	Total Energy	Energy Cost @ 0.05/KW
Option 3	1200	4.2	5.9	6060	500	6560	4893.76	5627.824	1000	5627824	$ 281,391.20

Refrigerant

	lb/yr		
Option 3	500	9	4500

Maintenance

	Purchase Cost	Percentage	Total Cost
Option 3	3000000	0.04	120000

Option 3		
Energy	$	281,391.20
Refrigerant	$	4,500.00
Maintenance	$	120,000.00
Total	**$**	**405,891.20**

Summary of IRT Mechanical Construction Cost Estimate

WP	Work Package Description, Option 3		Material/Equip (Installed)	Engineering	Total	%
22	Building, 70 ft x 120 ft, new		$ 2,018,600	$198,000	2,216,600	18.5%
16	Piping System		$ 2,809,881	$301,575	3,111,456	25.9%
17	Compressor System		$3,104,850	$165,900	$3,270,750	27.3%
15	Condensers, Economizers, Exp Tank and Chiller Barrels		$485,250	$60,000	$545,250	4.5%
19	Pumps		$97,500	$5,400	102,900.0	0.9%
8	Controls		$350,000	$63,000	413,000.0	3.4%
9	Electrical Power		$500,000	$43,200	543,200.0	4.5%
20	New HX		$1,497,500	$299,500	1,797,000.0	15.0%
	Subtotal, Option 3		$10,863,581	$1,136,575	$12,000,156	100.0%
	Contractor Overhead:	10%	$1,086,358	$113,658	$1,200,016	
	Subtotal:		$11,949,939	$1,250,233	$13,200,172	
	Contractor Profit:	15%	$1,792,491	$187,535	$1,980,026	
	Option 3 Total (March 2007 $):		$13,742,430	$1,437,767	$15,180,197	
	Option 3 Total in Existing Building		$11,288,901	$1,287,297	$12,576,198	

ASE Construction Estimate
Work Package 8 -- Controls

			Equipment or Material (Installed)					Engineering				
Ref.	Description	Tag Number	Cost Per Unit	Unit Measure	Quantity	Total Cost	Basis for Estimate	Hours	Per Unit	Total	Basis for Estimate	Total Costs
	Engineering					$ -		700	$ 75	$ 52,500	ASE Estimate	$ 52,500
									$ 75	$ -		$ 300,000
	Material / Equipment		$ 300,000		1	$ 300,000	ASE Est		$ 75	$ -		$ 300,000
									$ 75	$ -		$ -
	Supervisory PLC and Interface		$ 50,000		1	$ 50,000	ASE Est		$ 75	$ -		$ 50,000
									$ 75	$ -		$ -
	Installation - included in above					$ -			$ 75	$ -		$ -
									$ 75	$ -		$ -
									$ 75	$ -		$ -
									$ 75	$ -		$ -
						$ -			$ 75	$ -		$ -
	Documentation							70	$ 75	$ 5,250	See Note 2	$ 5,250
	Support for Integrated Tests							35	$ 75	$ 2,625	See Note 3	$ 2,625
	Support for Operational Validation Tests							35	$ 75	$ 2,625	See Note 4	$ 2,625
	TOTAL					**$ 350,000**		**840**		**$ 63,000**		**$ 713,000**

NOTES:

1	Hourly Engineering Labor Cost =	$75	
2	Documentation	10%	of Engineering Design Cost
3	Support for Integrated Tests	5%	of Engineering Design Cost
4	Support for Operational Validation Tests	5%	of Engineering Design Cost
5	ASE estimates based on Design, Specification and / or Supply of similar equipment		

ASE Construction Estimate
Work Package 9 -- Electrical Power Supply

			Equipment or Material (Installed)					Engineering				
Ref.	Description	Tag Number	Cost Per Unit	Unit Measure	Quantity	Total Cost	Basis for Estimate	Hours	Per Unit	Total	Basis for Estimate	Total Costs
								480	$ 75	$ 36,000		$ 36,000
	Compresor Power Wiring		$ 400,000		1	$ 400,000	ASE Est		$ 75	$ -		$ 400,000
						$ -			$ 75	$ -		$ -
	Valve Wiring		$ 100,000		1	$ 100,000	ASE Est		$ 75	$ -		$ 100,000
						$ -			$ 75	$ -		$ -
						$ -			$ 75	$ -		$ -
						$ -			$ 75	$ -		$ -
						$ -			$ 75	$ -		$ -
						$ -			$ 75	$ -		$ -
						$ -			$ 75	$ -		$ -
						$ -			$ 75	$ -		$ -
						$ -			$ 75	$ -		$ -
						$ -			$ 75	$ -		$ -
						$ -			$ 75	$ -		$ -
						$ -			$ 75	$ -		$ -
	Documentation							48	$ 75	$ 3,600	See Note 2	$ 3,600
	Support for Integrated Tests							24	$ 75	$ 1,800	See Note 3	$ 1,800
	Support for Operational Validation Tests							24	$ 75	$ 1,800	See Note 4	$ 1,800
	TOTAL					**$ 500,000**		**576**		**$ 43,200**		**$ 543,200**

NOTES:

1	Hourly Engineering Labor Cost =	$75	
2	Documentation	10%	of Engineering Design Cost
3	Support for Integrated Tests	5%	of Engineering Design Cost
4	Support for Operational Validation Tests	5%	of Engineering Design Cost
5	ASE estimates based on Design, Specification and / or Supply of similar equipment		

ASE Construction Estimate
Work Package 15 -- Condensors,Economizers and Barrrel Chillers

			Equipment or Material (Installed)					Engineering				
Ref.	Description	Tag Number	Cost Per Unit	Unit Measure	Quantity	Total Cost	Basis for Estimate	Hours	Per Unit	Total	Basis for Estimate	Total Costs
	Condensors, 2 ft dia, 7 ft lg		$ 17,000	Lump Sum	6	$ 102,000	Sim to TEI quote Q4434JRO	100	$ 75	$ 7,500	ASE Estimate	$ 109,500
						$ -			$ 75	$ -		$ -
	Economizer, 2 ft dia, 7 ft lg		$ 20,000		6	$ 120,000	Sim to TEI quote Q4434JRO	100	$ 75	$ 7,500	ASE Estimate	$ 127,500
						$ -			$ 75	$ -		$ -
	Barrel Chiller(HX), 2 ft dia 7 ft lg		$ 15,000	Lump Sum	6	$ 90,000	Sim to TEI quote Q4434JRO	100	$ 75	$ 7,500	ASE Estimate	$ 97,500
	Expansion Tank(HX), 8 ft dia 16 ft lg		$ 27,000	Lump Sum	1	$ 27,000	Richardson Sect 100-341	200	$ 75	$ 15,000	ASE Estimate	$ 42,000
	Insualtion of Economizers - see piping section								$ 75	$ 15,000	ASE Estimate	$ 42,000
						$ -			$ 75	$ -		$ -
	Installation					$ -			$ 75	$ -		$ -
						$ -			$ 75	$ -		$ -
	Condensors		$ 75	labor hour	600	$ 45,000	ASE Estimate		$ 75	$ -		$ 45,000
						$ -			$ 75	$ -		$ -
	Economizer		$ 75	labor hour	600	$ 45,000	ASE Estimate		$ 75	$ -		$ 45,000
						$ -			$ 75	$ -		$ -
	Barrel Chiller		$ 75	labor hour	600	$ 45,000	ASE Estimate		$ 75	$ -		$ 45,000
	Expansion Tank		$ 75	labor hour	150	$ 11,250	ASE Estimate		$ 75	$ -		$ 11,250
						$ -			$ 75	$ -		$ -
	Documentation							50	$ 75	$ 3,750	See Note 2	$ 3,750
	Support for Integrated Tests							25	$ 75	$ 1,875	See Note 3	$ 1,875
	Support for Operational Validation Tests							25	$ 75	$ 1,875	See Note 4	$ 1,875
	TOTAL					**$ 485,250**		**600**		**$ 60,000**		**$ 572,250**

NOTES:

1	Hourly Engineering Labor Cost =	$75	
2	Documentation	10%	of Engineering Design Cost
3	Support for Integrated Tests	5%	of Engineering Design Cost
4	Support for Operational Validation Tests	5%	of Engineering Design Cost
5	ASE estimates based on Design, Specification and / or Supply of similar equipment		

ASE Construction Estimate
Work Package 16 -- Piping Systems

			Equipment or Material (Installed)					Engineering				
Ref.	Description	Tag Number	Cost Per Unit	Unit Measure	Quantity	Total Cost	Basis for Estimate	Hours	Per Unit	Total	Basis for Estimate	Total Costs
	Piping and Valves		$ 1,410,302	Lump Sum	1	$ 1,410,302	See Sheet WP6 - Details	1600	$ 75	$ 120,000	ASE Estimate	$ 1,530,302
	Insulation		$ 407,071	Lump Sum	1	$ 407,071	See Sheet WP6 - Details	400	$ 75	$ 30,000	ASE Estimate	$ 437,071
	Coolant Fluids		$ 992,508	Lump Sum	1	$ 992,508	See Sheet WP6 - Details	150	$ 75	$ 11,250	ASE Estimate	$ 1,003,758
	Overall Piping System Analysis					$ -		1200	$ 75	$ 90,000	ASE Estimate	$ 90,000
						$ -			$ 75	$ -		$ -
						$ -			$ 75	$ -		$ -
						$ -			$ 75	$ -		$ -
						$ -			$ 75	$ -		$ -
						$ -			$ 75	$ -		$ -
						$ -			$ 75	$ -		$ -
						$ -			$ 75	$ -		$ -
	Documentation							335	$ 75	$ 25,125	See Note 2	$ 25,125
	Support for Integrated Tests							168	$ 75	$ 12,600	See Note 3	$ 12,600
	Support for Operational Validation Tests							168	$ 75	$ 12,600	See Note 4	$ 12,600
	TOTAL					**$ 2,809,881**		**4021**		**$ 301,575**		**$ 3,111,456**

NOTES:

1 Hourly Engineering Labor Cost = $75
2 Documentation 10% of Engineering Design Cost
3 Support for Integrated Tests 5% of Engineering Design Cost
4 Support for Operational Validation Tests 5% of Engineering Design Cost
5 ASE estimates based on Design, Specification and / or Supply of similar equipment
6 Sheet WP16 -- Details: ASE valve cost estimate model based on actual costs of similar valves from previous recent projects
7 Sheet WP16 -- Details: Costs from Richardson cost estimating manual (2002) increased by factor of 1.4 to account for: a) steel price increases, and b) limited quantities and other relevant factors per Richardson manual
8 Sheet WP16 -- Details: Piping lengths are approximate, average lengths for each identified system based on ASE layout Drawing

ASE Construction Estimate
Work Package 16 -- Piping Systems
Cost Estimate Details

Piping Run/Component	Pressure, psig	OD, inch	Wall thickness, inch (min)	Stress, psi	Ext P Cap, psi (approx)	Length, mm	Volume ft3	Length, ft	Wt, lbs	Materials / Equipment Cost Basis: Per ft	Per lb	Per Item	Installation Cost: Labor hrs	Labor Cost/hr	Quantity	Total Cost	Estimate Basis / Comments
Piping and Valves																**$ 1,410,302**	
Main Return lines to/from HX & Chiller																	
Pipe	150	26	0.25	7800	19.23	125000	3,024	410	28440	$ 169.00					2	$ 138,615	Richardson
Fileld beveling & butt welds		26							0			$ 1,078.00			16	$ 17,248	Richardson
Exp Joint		26										$ 3,000.00	12	$ 50.00	4	$ 14,400	Richardson
Check Valve		26										$ 25,000	4	$ 50.00	1	$ 25,200	ASE valve cost estimate model
Elbow		26	0.375					5	520			$ 2,373.00			20	$ 47,460	Richardson
Tee		26	0.375					8	832			$ 3,405.00			2	$ 6,810	Richardson
150 lb flanges		26							260		$ 4.20				20	$ 21,840	Richardson
150 lb flange bolts & gaskets		26										$ 600.00			20	$ 12,000	Richardson
Painting pipes, based on area in ft2		26				125,000		410	2791	ft2		$ 5.00			2	$ 27,915	Means Estimate
Support Tower									14829		$ 5.00				1	$ 74,146	Weight = 20% of Supported Weight
Subtotal																$ 385,634	
HX Modules to Supply/Return lines																	
Pipe	150	6	0.1875	2400	62.50	2000	54	7	79	$ 31.00					42	$ 8,543	Richardson
Fileld beveling & butt welds		6							0			$ 308.00			42	$ 12,936	Richardson
Nipple		6							14			$ 197.00	4	$ 50.00	42	$ 16,674	Richardson
Elbow		6	0.375					2	25			$ 202.00			84	$ 16,968	Richardson
Exp Joint		6										$ 2,000.00	2	$ 50.00	42	$ 88,200	Richardson
150 lb flanges		6							24		$ 4.20				84	$ 8,467	Richardson
150 lb flange bolts & gaskets		6										$ 119.00			84	$ 9,996	Richardson
Painting pipes, based on area in ft2		6				84,000		276	433	ft2		$ 5.00			1	$ 2,164	Means Estimate
Support Tower									1602		$ 5.00				1	$ 8,012	Weight = 20% of Supported Weight
Subtotal																$ 171,961	
Supply/Return Lines to Chiller Barrels																	
Pipe	350	10	0.2500	7,000	50.00	2,000	43	7	175	$ 54.00					12	$ 4,252	Richardson. Assume 3/8 wall
Field beveling & butt welds		10										$ 412.00			12	$ 4,944	Richardson
Elbow		10	0.375					6	88			$ 384.00			12	$ 4,608	Richardson.
Nipple		10							39			$ 302.00	4	$ 50.00	12	$ 6,024	Richardson
Check Valve		10										$ 4,200	4	$ 50.00	12	$ 52,800	ASE valve cost estimate model
BF valve		10										$ 6,000	16	$ 50.00	18	$ 122,400	Vanessa quote
150 lb flanges		10							80		$ 4.20				54	$ 18,144	Richardson
150 lb flange bolts & gaskets		10										$ 228.00			54	$ 12,312	Richardson
Painting pipes, based on area in ft2		10				2,000		7	17	ft2		$ 5.00			12	$ 1,031	Means Estimate
Support Tower									1495		$ 5.00				1	$ 7,476	Weight = 20% of Supported Weight
Subtotal																$ 233,991	
Chiller Barrel to Compressors																	
Pipe	150	16	0.375	3200	46.88	10000		33	2100	$ 81.00					8	$ 21,260	Richardson
Fileld beveling & butt welds		16							0			$ 598.00			16	$ 9,568	Richardson
BF valve		16										$ 8,000	16	$ 50.00	8	$ 70,400	Vanessa quote
Elbow		16	0.375					4	206			$ 773.00			16	$ 12,368	Richardson
150 lb flanges		16							140		$ 4.20				16	$ 9,408	Richardson
150 lb flange bolts & gaskets		16										$ 343.00			16	$ 5,488	Richardson
Painting pipes, based on area in ft2		16				10,000		33	137	ft2		$ 5.00			8	$ 5,497	Means Estimate
Support Tower									4467		$ 5.00				1	$ 22,337	Weight = 20% of Supported Weight
Subtotal																$ 156,326	
Comp to Economizer																	
Pipe	350	6	0.1875	5600	62.50	6000		20	236	$ 31.00					6	$ 3,661	Richardson
Fileld beveling & butt welds		6							0			$ 308.00			12	$ 3,696	Richardson
BF valve		6										$ 1,800.00	4	$ 50.00	6	$ 12,000	Richardson
Elbow		6	0.375					2	25			$ 202.00			18	$ 3,636	Richardson
150 lb flanges		6							24		$ 4.20				18	$ 1,814	Richardson
150 lb flange bolts & gaskets		6										$ 119.00			18	$ 2,142	Richardson
Painting pipes, based on area in ft2		6				6,000		20	31	ft2		$ 5.00			6	$ 928	Means Estimate
Support Tower									460		$ 5.00				1	$ 2,300	Weight = 20% of Supported Weight
Subtotal																$ 30,177	
Compressors to Condensors																	
Pipe	350	8	0.1875	7466.7	46.88	4000		13	210	$ 41.00					6	$ 3,228	Richardson
Field beveling & butt welds		8							0			$ 349.00			12	$ 4,188	Richardson

ASE Construction Estimate
Work Package 16 -- Piping Systems
Cost Estimate Details

Piping Run/Component	Pressure, psig	OD, inch	Wall thickness, inch (min)	Stress, psi	Ext P Cap, psi (approx)	Length, mm	Volume ft3	Length, ft	Wt, lbs	Materials / Equipment Cost Basis: Per ft	Per lb	Per Item	Installation Cost: Labor hrs	Labor Cost/hr	Quantity	Total Cost	Estimate Basis / Comments
CV valve		8										$ 4,152	4	$ 50.00	6	$ 26,112	ASE valve cost estimate model
Elbow		8	0.375					8	50			$ 270.00			12	$ 3,240	Richardson
150 flanges		8							39		$ 4.20				24	$ 3,931	Richardson
150 lb flange bolts & gaskets		8										$ 100.00			24	$ 2,400	Richardson
Painting pipes, based on area in ft2		8				4,000		13	27	ft2		$ 5.00			6	$ 825	Means Estimate
Support Tower									559		$ 5.00				1	$ 2,796	Weight = 20% of Supported Weight
Subtotal																$ 46,720	
Condensor to Feed Control Valve																	
Pipe	350	4	0.1875	3733	93.75	15000	26	49	394	$ 21.00					6	$ 6,201	Richardson.
Fileld beveling & butt welds		4							0			$ 225.00			12	$ 2,700	Richardson
Reducer 6 to 4		4							9			$ 165.00			6	$ 990	Richardson
Elbow		4	0.375					2	25			$ 146.00			12	$ 1,752	Richardson.
Control valve		4										$ 12,000	4	$ 50.00	6	$ 73,200	ASE valve cost estimate model
150 lb flanges		4							15		$ 4.20				32	$ 2,016	Richardson
150 lb flange bolts & gaskets		4										$ 97.00			32	$ 3,104	Richardson
Painting pipes, based on area in ft2		4				15,000		49	52	ft2		$ 5.00			6	$ 1,546	Means Estimate
Support Tower									639		$ 5.00				1	$ 3,197	Weight = 20% of Supported Weight
Subtotal																$ 94,706	
Liquid Feed Control Valve to Chiller Barrel																	
Pipe	350	8	0.1875	7466.7	46.88	4000	27	13	210	$ 41.00					6	$ 3,228	Richardson
Field beveling & butt welds		8							0			$ 349.00			12	$ 4,188	Richardson
Elbow		8	0.375					8	50			$ 270.00			12	$ 3,240	Richardson
150 flanges		8							39		$ 4.20				18	$ 2,948	Richardson
150 lb flange bolts & gaskets		8										$ 100.00			18	$ 1,800	Richardson
Painting pipes, based on area in ft2		8				4,000		13	27	ft2		$ 5.00			6	$ 825	Means Estimate
Support Tower									512		$ 5.00				1	$ 2,562	Weight = 20% of Supported Weight
Subtotal																$ 18,791	
Hot Gas Control Valve to Chiller Barrel																	
Pipe	150	12	0.2500	3,600	41.67	4,000		13	420	$ 66.00					6	$ 5,197	Richardson
Field beveling & butt welds		12										$ 494.00			12	$ 5,928	Richardson
Elbow		12	0.375					6	125			$ 504.00			6	$ 3,024	Richardson.
150 lb flanges		12							80		$ 4.20				12	$ 4,032	Richardson
150 lb flange bolts & gaskets		12										$ 228.00			12	$ 2,736	Richardson
Painting pipes, based on area in ft2		12				4,000		13	41	ft2		$ 5.00			6	$ 1,237	Means Estimate
Support Tower									846		$ 5.00				1	$ 4,230	Weight = 20% of Supported Weight
Subtotal																$ 26,384	
Comp to Hot Gas Control Valve																	
Pipe	350	4	0.1875	3733	93.75	36000	62	118	945	$ 21.00					6	$ 14,882	Richardson.
Fileld beveling & butt welds		4							0			$ 225.00			12	$ 2,700	Richardson
Control valve		4										$ 5,000	4	$ 50.00	6	$ 31,200	ASE valve cost estimate model
Tee		4							30			$ 224.00			6	$ 1,344	Richardson
Elbow		4	0.375					2	25			$ 146.00			12	$ 1,752	Richardson.
150 lb flanges		4							15		$ 4.20				12	$ 756	Richardson
150 lb flange bolts & gaskets		4										$ 97.00			12	$ 1,164	Richardson
Painting pipes, based on area in ft2		4				36,000		118	124	ft2		$ 5.00			6	$ 3,711	Means Estimate
Support Tower									1266		$ 5.00				1	$ 6,330	Weight = 20% of Supported Weight
Subtotal																$ 63,839	
Cooling Water to Condensors																	
Pipe	85	18	0.3750	2,040	41.67	32,000		105	7561	$ 88.00					6	$ 55,433	Richardson.
Field beveling & butt welds		18										$ 661.00			12	$ 7,932	Richardson
Valve		18										$ 1,800	12	$ 50.00	6	$ 14,400	Vanessa quote
Elbow		18	0.375					6	260			$ 934.00			12	$ 11,208	Richardson
Nipple		10							39			$ 302.00			12	$ 3,624	Richardson
Exp Joint		10										$ 2,000.00	2	$ 50.00	12	$ 25,200	Richardson
150 lb flanges		10							80		$ 4.20				12	$ 4,032	Richardson
150 lb flange bolts & gaskets		10										$ 228.00			12	$ 2,736	Richardson
150 lb flanges		18							150		$ 4.20				16	$ 10,080	Richardson
150 lb flange bolts & gaskets		18										$ 430.00			16	$ 6,880	Richardson
Painting pipes, based on area in ft2		18				32,000		105	495	ft2		$ 5.00			1	$ 2,474	Means Estimate
Support Tower									10801		$ 5.00				1	$ 54,004	Weight = 20% of Supported Weight
Subtotal																$ 198,002	

ASE Construction Estimate
Work Package 16 -- Piping Systems
Cost Estimate Details

Piping Run/Component	Pressure, psig	OD, inch	Wall thickness, inch (min)	Stress, psi	Ext P Cap, psi (approx)	Length, mm	Volume ft3	Length, ft	Wt, lbs	Materials / Equipment Cost Basis: Per ft	Per lb	Per Item	Installation Cost: Labor hrs	Labor Cost/hr	Quantity	Total Cost	Estimate Basis / Comments
Pipe Insualation, Urethane w/ Vapor Barrier																**$ 407,071**	
and Jacket, 3 inches thick									**Area ft2**		**cost/ft2**						
Liquid Feed Control Valve to Chiller Barrel		8	0.1875	0.0	46.88	4000		13	27		$ 50.00				6	$ 8,246	Richardson
Chiller Barrel to/from HX, Main		26	0.25	0	19.23	125000		410	2791		$ 50.00				2	$ 279,150	Richardson
HX Module Piping		6	0.1875	0	62.50	2000		7	10		$ 50.00				42	$ 21,645	Richardson
Chiller Barrels to Compressors		16	0.375	0	46.88	10000		33	137		$ 50.00				6	$ 41,228	Richardson
HX Main to Chiller Barrels		10	0.2500	0	50.00	2,000		7	17		$ 50.00				12	$ 10,307	Richardson
Chiller Barrels 2 ft dia 7 ft lg		24					132	7	44		$ 50.00				6	$ 13,195	Richardson
Economizer 2 ft dia, 7 ft lg		24					132	7	44		$ 50.00				6	$ 13,195	Richardson
Expansion Tank, 8 ft dia, 16 ft lg		96					804	16	402		$ 50.00				1	$ 20,106	Richardson
Coolant Fluids Total																**$ 992,508**	
Refrigerant Volume, R507																	
												Cost/ft3					
Piping/Components, R507 =							649	ft3	**4855**	**gallons**		$ 200.00				**$ 129,833**	100% piping, 50% barrel and exp tank
(50% above items)																	50% economizer
Secondary Loop, Therminal D12																	
Piping from above							3,121	ft3	23345	gallons							
HX =							462.3	ft3	3458	gallons							
(estimate from NASA)												Cost/gal					
Total Therminal D12 =							4233	ft3	**31658**	**gallons**		$ 27.25				**$ 862,675**	Solutia Inc Quote dated 2 Mar 07

ASE Construction Estimate
Work Package 17 -- Compressor System

			Equipment or Material (Installed)					Engineering				
Ref.	Description	Tag Number	Cost Per Unit	Unit Measure	Quantity	Total Cost	Basis for Estimate	Hours	Per Unit	Total	Basis for Estimate	Total Costs
	Engineering					$ -			$ 75	$ -		$ -
	System Performance Analysis					$ -		1200	$ 75	$ 90,000	ASE Estimate	$ 90,000
	Equipment Design / Specification					$ -		400	$ 75	$ 30,000	ASE Estimate	$ 30,000
	Compressors					$ -			$ 75	$ -		$ -
	Compressor Skid, Frick RWF II 676, 16 ft lg, 6.2 ft wd, 7.3 ft ht		$ 500,000	Ea	6	$ 3,000,000	York ROM	250	$ 75	$ 18,750		$ 3,018,750
	Mounting Beams, W30X210, 80 ft lg		$ 8,400	Ea	4	$ 33,600	$0.50/lb	260	$ 75	$ 19,500		$ 53,100
									$ 75	$ -		$ -
									$ 75	$ -		$ -
									$ 75	$ -		$ -
									$ 75	$ -		$ -
	Installation:					$ -			$ 75	$ -		$ -
	Compressor Skid		$ 75	labor hour	750	$ 56,250	ASE Estimate		$ 75	$ -		$ 56,250
	Mounting Beams		$ 75	labor hour	200	$ 15,000	ASE Estimate		$ 75	$ -		$ 15,000
						$ -			$ 75	$ -		$ -
	Documentation							51	$ 75	$ 3,825	See Note 2	$ 3,825
	Support for Integrated Tests							26	$ 75	$ 1,913	See Note 3	$ 1,913
	Support for Operational Validation Tests							26	$ 75	$ 1,913	See Note 4	$ 1,913
	TOTAL					**$ 3,104,850**		**612**		**$ 165,900**		**$ 3,150,750**

NOTES:

1	Hourly Engineering Labor Cost =	$75	
2	Documentation	10%	of Engineering Design Cost
3	Support for Integrated Tests	5%	of Engineering Design Cost
4	Support for Operational Validation Tests	5%	of Engineering Design Cost
5	ASE estimates based on Design, Specification and / or Supply of similar equipment		

ASE Construction Estimate
Work Package 19 -- Pumps

			Equipment or Material (Installed)					Engineering				
Ref.	Description	Tag Number	Cost Per Unit	Unit Measure	Quantity	Total Cost	Basis for Estimate	Hours	Per Unit	Total	Basis for Estimate	Total Costs
						$ -			$ 75	$ -		$ -
	Material/Equipment:					$ -			$ 75	$ -		$ -
	Pump, 13120 gpm total, 50 psi		$ 45,000	Lump Sum	2	$ 90,000	Richardson 100-280	60	$ 75	$ 4,500		$ 94,500
	(use two 7000 gpm, 500 hp units)								$ 75			
	Installation, Main Pump		$ 75	labor hour	100	$ 7,500	Richardson 100-280		$ 75			
									$ 75			
	Documentation							6	$ 75	$ 450	See Note 2	$ 450
	Support for Integrated Tests							3	$ 75	$ 225	See Note 3	$ 225
	Support for Operational Validation Tests							3	$ 75	$ 225	See Note 4	$ 225
	TOTAL					**$ 97,500**		**72**		**$ 5,400**		**$ 95,400**

NOTES:

1. Hourly Engineering Labor Cost = $75
2. Documentation 10% of Engineering Design Cost
3. Support for Integrated Tests 5% of Engineering Design Cost
4. Support for Operational Validation Tests 5% of Engineering Design Cost
5. ASE estimates based on Design, Specification and / or Supply of similar equipment
6. Sheet WP7 -- Details: Costs from Richardson cost estimating manual (2002) increased by factor of 1.4 to account for: a) steel price increases, and b) limited quantities and other relevant factors per Richardson manual

ASE Construction Estimate
Work Package 20 -- Heat Exchanger Mods

			Equipment or Material (Installed)					Engineering				
Ref.	Description	Tag Number	Cost Per Unit	Unit Measure	Quantity	Total Cost	Basis for Estimate	Hours	Per Unit	Total	Basis for Estimate	Total Costs
	Hardware and Tooling (in Shop)		$ 1,250,000	Lump Sum	1	$ 1,250,000	Richardson Sect 100-341	750	$ 75	$ 56,250	ASE Estimate.	$ 1,306,250
	Tunnel Mods Allowance		$ 75	labor hour	300	$ 22,500	ASE Estimate				Material Cost Negligible	
									$ 75			
	Removal of Old and Installation of New		$ 75	labor hour	3000	$ 225,000	ASE Estimate		$ 75			
						$ -			$ 75	$ -		$ -
						$ -			$ 75	$ -		$ -
	Documentation							60	$ 75	$ 4,500	See Note 2	$ 4,500
	Support for Integrated Tests							30	$ 75	$ 2,250	See Note 3	$ 2,250
	Support for Operational Validation Tests							30	$ 75	$ 2,250	See Note 4	$ 2,250
	TOTAL					**$ 1,497,500**		**870**		**$ 65,250**		**$ 1,315,250**

NOTES:

1	Hourly Engineering Labor Cost =	$75	
2	Documentation	10%	of Engineering Design Cost
3	Support for Integrated Tests	5%	of Engineering Design Cost
4	Support for Operational Validation Tests	5%	of Engineering Design Cost
5	ASE estimates based on Design, Specification and / or Supply of similar equipment		

ASE Construction Estimate
Work Package 22 -- New Building, Site and Foundations

			Equipment or Material (Installed)					Engineering				
Ref.	Description	Tag Number	Cost Per Unit	Unit Measure	Quantity	Total Cost	Basis for Estimate	Hours	Per Unit	Total	Basis for Estimate	Total Costs
	New Compressor Building		$ 150	s.f.	9424	$ 1,413,600	Cost per S.f. of similar bdg's	2200	$ 75	$ 165,000	Preliminary figure pending Protel estimate	$ 1,578,600
	Civil - Site Work		$ 500,000	l.s.	1	$ 500,000			$ 75	$ -		$ 500,000
	Evironmental - Site Clean-up		$ 105,000	l.s.	1	$ 105,000			$ 75	$ -		$ 105,000
									$ 75	$ -		$ -
									$ 75	$ -		$ -
									$ 75	$ -		$ -
									$ 75	$ -		$ -
									$ 75	$ -		$ -
									$ 75	$ -		$ -
									$ 75	$ -		$ -
									$ 75	$ -		$ -
						$ -			$ 75	$ -		$ -
						$ -			$ 75	$ -		$ -
						$ -			$ 75	$ -		$ -
						$ -			$ 75	$ -		$ -
	Documentation							220	$ 75	$ 16,500	See Note 2	$ 16,500
	Support for Integrated Tests							110	$ 75	$ 8,250	See Note 3	$ 8,250
	Support for Operational Validation Tests							110	$ 75	$ 8,250	See Note 4	$ 8,250
	TOTAL					**$ 2,018,600**		**2640**		**$ 198,000**		**$ 2,216,600**

NOTES:

1	Hourly Engineering Labor Cost =	$75	
2	Documentation	10%	of Engineering Design Cost
3	Support for Integrated Tests	5%	of Engineering Design Cost
4	Support for Operational Validation Tests	5%	of Engineering Design Cost
5	Estimates based on Richardson estimating manual include lighting, electrical outlets, HVAC, finishes, etc. for typical industrial buildings		
6	ASE estimates based on Design, Specification and / or Supply of similar equipment (Sheet WP1 -- Details)		

IRT Construction Schedule																
ASE - Bob Week																
4-Apr-07																
Option/Tasks						**MONTHS**										
	1	**2**	**3**	**4**	**5**	**6**	**7**	**8**	**9**	**10**	**11**	**12**	**13**	**14**	**15**	**16**
Option 3 (New Building & New HX)																
New Building with Footings for Equipmewnt																
Order Major Equipment (Comp & Vessels)																
Install Major Equipment in Building																
Shop Fab Piping & New HX																
Install Building Piping																
Remove Existing HX Piping																
Remove Existing HX																
Install New HX																
Install HX Piping																
Checkout and Commissioning																
Downtime																
Option 3 (Existing Building & New HX)																
Remove Existing Equipment/Piping																
Modify Building (Mtg beams & penetrations)																
Order Major Equipment (Comp, HX & Vessels)																
Install Major Equipment																
Shop Fab Piping																
Install Building Piping																
Remove Existing HX Piping																
Remove HX																
Install New HX																
Install HX Piping																
Checkout and Commissioning																
Downtime																

R-507

Temperature, F	Pressure, psig
-60	5.3 ("Hg Vac)
-55	1.7 ("Hg Vac)
-50	1.1
-45	3.3
-40	5.7
-35	8.4
-30	11.3
-25	14.5
-20	18.0
-15	21.8
-10	26.0
-5	30.5
0	35.4
5	40.6
10	46.3
15	52.4
20	58.9
25	65.9
30	73.4
35	81.4
40	90.0
45	99.1
50	108.8
55	119.1
60	130.0
65	141.6
70	153.8
75	166.8
80	180.4
85	194.9
90	210.1
95	226.1
100	243.0
105	260.8
110	279.5
115	299.1
120	319.7
125	341.4
130	364.1
135	388.1
140	413.2
145	439.6
150	467.4

Honeywell Genetron® AZ-50 & 404A

Properties, Uses, Storage, and Handling

Honeywell

Honeywell Genetron® AZ-50 & 404A Properties, Uses, Storage, and Handling

Table of Contents

Introduction 3

Applications 3

AZ-50 Physical Properties 3

404A Physical Properties 4

AZ-50 Pressure vs. Temperature (English Units & SI Units) 4

404A Pressure vs. Temperature (English Units & SI Units) 5

AZ-50 and 404A Refrigeration Grade Specifications 5

Performance Data (English Units & SI Units) 5

Genetron 404A vs. Genetron 507 6

Lubricants 6

Miscibility in Lubricants 6

Miscibility Genetron AZ-50 or Genetron 404A and Polyol Ester Lubricant 6

Stability with Metals 6

Stability of Genetron AZ-50 with Polyol Ester Lubricants and Metals 7

Chlorinated Materials and Refrigerants 7

Genetron AZ-50 or Genetron 404A Mixtures with R-502 7

Equipment 7

Compatibility: Plastics and Elastomers 7

Desiccants 8

Solubility of Water in Genetron AZ-50 8

Safety 8

Toxicity 8

Inhalation 8

Skin and Eye Contact 8

Leaks 8

Flammability 8

Combustibility 8

Thermal Stability 9

Storage and Handling 9

Maintenance 9

Leak Detection 10

Environmental Considerations 10

Reclamation 11

Retrofitting 11

Long-term vs. Interim Replacements 11

Retrofit Lubricants 11

Retrofit Procedures 11

Packaging 11

Technical Assistance 11

Available Literature 11

Thermodynamic Tables (English Units & SI Units) 12–19

Introduction

Genetron® AZ-50® refrigerant (an azeotropic mixture of HFC-125 and HFC-143a, assigned R-507 by ASHRAE) was developed by Honeywell to serve as a long-term substitute for the refrigerant R-502. This patented, environmentally safe, non-ozone-depleting substitute possesses similar energy efficiency and capacity characteristics to R-502 and has an intrinsically low toxicity. Genetron AZ-50 has higher energy efficiency than other R-502 alternatives, due in part to superior heat transfer characteristics. Genetron AZ-50 is an excellent refrigerant choice for low- and medium-temperature refrigeration applications.

Genetron® 404A is a refrigerant blend made up of HFC-125, HFC-143a, and HFC-134a and assigned the refrigerant number R-404A by ASHRAE. Like Genetron AZ-50, Genetron 404A is a non-ozone-depleting long-term alternative to R-502 that is well suited for low- and medium-temperature refrigeration applications.

Applications

In commercial refrigeration, Genetron AZ-50 and Genetron 404A serve a wide range of applications including supermarket freezer cases, reach-in coolers, display cases, transport refrigeration, and ice machines. These refrigerants may also be used to replace R-502 in a number of specialty applications.

Genetron AZ-50 and Genetron 404A are suitable for both new equipment and retrofitting existing R-502 commercial refrigeration systems. Generally, there will be few, if any, equipment changes necessary to optimize the performance of Genetron AZ-50 or Genetron 404A refrigerants in these applications. For retrofitting commercial systems, refer to bulletin G525-100, Genetron Refrigeration Retrofit Guidelines.

Physical Properties AZ-50

Chemical Name		Pentafluoroethane/ 1,1,1-Trifluoroethane
Appearance		Clear, colorless gas with a faint ethereal odor
Molecular Formula (composition, wt%)		CHF_2CF_3 (50%) CH_3CF_3 (50%)
Molecular Weight		98.9
Boiling Point	@ 1 ATM @ 1.01 bar	-52.1°F -46.8°C
Freezing Point Range	@ 1 ATM @ 1.01 bar	-177.7 to -181.3 °F -116.5 to 118.5 °C
Critical Temperature*		159.11°F 70.617°C
Critical Pressure*		537.37 (Psia) 3705 (kPa)
Critical Volume*		0.0326 (ft^3/lb) 0.002 (m^3/kg)
Critical Density*		30.637 (lb/ft^3) 490.77 (kg/m^3)
Vapor Density at boiling point		0.3487 (lb/ft^3) 5.585 (kg/m^3)
Liquid Density		65.42 (lb/ft^3) 1048.0 (kg/m^3)
Liquid Heat Capacity at constant pressure		0.37 (Btu/lb•°F) 1.54 (kJ/kg•K)
Vapor Heat Capacity at constant pressure		
	@ 1 ATM @ 1.01 bar	0.208 (Btu/lb•°F) 0.8700 (kJ/kg•K)
Heat of Vaporization at boiling point		84.72 (Btu/lb) 196.95 (kJ/kg)
Vapor Pressure		186.02 (Psia) 1283 (kPa)
Liquid Thermal Conductivity		0.0369 (Btu/hr•ft•°F) 0.0639 (W/m•K)
Vapor Thermal Conductivity		0.0104 (Btu/hr•ft•°F) 0.0180 (W/m•K)
Liquid Viscosity		0.3087 (lb_m/ft•hr) 127.6 (µPa•s)
Vapor Viscosity		0.0353 (lb_m/ft•hr) 14.58 (µPa•s)
% Volatiles by volume		100
Flammability Limits in Air @ 1 ATM (vol. %)		None
Ozone Depletion Potential (ODP)		0.00
ASHRAE Safety Group Classification		A1

* NIST Refprop 7

Note: All measurements are at 77° (25°C) unless otherwise noted.

Physical Properties 404A

Chemical Name	Pentafluoroethane/ 1,1,1-Trifluoroethane/ 1,1,1,2-Tetrafluoroethane
Appearance	Clear, colorless gas with a faint ethereal odor
Molecular Formula (composition, wt %)	CHF_2CF_3 (44%) CH_3CF_3 (52%) CH_2FCF_3 (4%)
Molecular Weight	97.6
Boiling Point @ 1 ATM @ 1.01 bar	-51.2°F -46.2°C
Freezing Point Range @ 1 ATM @ 1.01 bar	 Not Measured Not Measured
Critical Temperature* 72.046°C	161.68°F
Critical Pressure*	540.82 (Psia) 3728.9 (kPa)
Critical Volume*	0.0329 (ft^3/lb) 0.002 (m^3/kg)
Critical Density*	30.373 (lb/ft^3) 486.53 (kg/m^3)
Vapor Density at boiling point	0.3423 (lb/ft^3) 5.48 (kg/m^3)
Liquid Density	65.18 (lb/ft^3) 1044 (kg/m^3)
Liquid Heat Capacity at constant pressure	 0.37 (Btu/lb•°F) 1.54 (kJ/kg•K)
Vapor Heat Capacity at constant pressure @ 1 ATM @ 1.01 bar	 0.210 (Btu/lb•°F) 0.8773 (kJ/kg•K)
Heat of Vaporization at boiling point	86.45 (Btu/lb) 200.94 (kJ/kg)
Vapor Pressure	165.3 (Psia) 1241 (kPa)
Liquid Thermal Conductivity	0.0375 (Btu/hr•ft•°F) 0.0649 (W/m•K)
Vapor Thermal Conductivity	0.0104 (Btu/hr•ft•°F) 0.0180 (W/m•K)
Liquid Viscosity	0.3130 (lb_m/ft•hr) 129.3 (µPa•s)
Vapor Viscosity	0.0349 (lb_m/ft•hr) 14.41 (µPa•s)
% Volatiles by volume	100
Flammability Limits in Air @ 1 ATM (vol. %)	 None
Ozone Depletion Potential (ODP)	0
ASHRAE Safety Group Classification	A1

* NIST Refprop 7

Note: All measurements are at 77° (25°C) unless otherwise noted.

AZ-50 Pressure vs. Temperature

Temp. (°F)	Pressure (psig)	Temp. (°C)	Pressure bar-gauge
-60	5.8 *	-50	-0.15
-55	2.2 *	-47.5	-0.03
-50	0.9	-45	0.09
-45	3.0	-42.5	0.23
-40	5.4	-40	0.38
-35	8.1	-37.5	0.54
-30	11.0	-35	0.72
-25	14.1	-32.5	0.91
-20	17.6	-30	1.12
-15	21.4	-27.5	1.35
-10	25.5	-25	1.59
-5	30.0	-22.5	1.85
0	34.8	-20	2.14
5	40.0	-17.5	2.44
10	45.7	-15	2.76
15	51.7	-12.5	3.11
20	58.2	-10	3.49
25	65.2	-7.5	3.88
30	72.7	-5	4.31
35	80.7	-2.5	4.76
40	89.2	0	5.23
45	98.3	2.5	5.74
50	107.9	5	6.28
55	118.2	7.5	6.85
60	129.1	10	7.45
65	140.6	12.5	8.09
70	152.8	15	8.76
75	165.8	17.5	9.46
80	179.5	20	10.21
85	193.9	22.5	10.99
90	209.1	25	11.82
95	225.2	27.5	12.68
100	242.1	30	13.59
105	259.9	32.5	14.54
110	278.6	35	15.54
115	298.3	37.5	16.59
120	318.9	40	17.69
125	340.7	42.5	18.83
130	363.5	45	20.03
135	387.5	47.5	21.29
140	412.7	50	22.60
145	439.2	52.5	23.97
150	467.2	55	25.41
		57.5	26.91
		60	28.48
		62.5	30.12
		65	31.84

* "Hg Vac

404A Pressure vs. Temperature

Temp. (°F)	Bubble Pressure (psig)	Dew Pressure (psig)	Temp. (°C)	Bubble Pressure bar-gauge	Dew Pressure bar-gauge
-60.0	6.4 *	7.3 *	-50	-0.17	-0.20
-55.0	2.9 *	3.9 *	-47.5	-0.06	-0.09
-50.0	0.5	0.1 *	-45	0.06	0.03
-45.0	2.6	2.0	-42.5	0.20	0.16
-40.0	4.9	4.3	-40	0.34	0.30
-35.0	7.5	6.8	-37.5	0.50	0.46
-30.0	10.3	9.6	-35	0.68	0.63
-25.0	13.4	12.7	-32.5	0.86	0.81
-20.0	16.8	16.0	-30	1.07	1.01
-15.0	20.5	19.7	-27.5	1.29	1.23
-10.0	24.6	23.6	-25	1.53	1.47
-5.0	28.9	27.9	-22.5	1.78	1.72
0.0	33.7	32.6	-20	2.06	1.99
5.0	38.8	37.7	-17.5	2.36	2.29
10.0	44.3	43.1	-15	2.68	2.60
15.0	50.2	49.0	-12.5	3.02	2.94
20.0	56.6	55.3	-10	3.38	3.30
25.0	63.4	62.1	-7.5	3.77	3.68
30.0	70.7	69.3	-5	4.18	4.09
35.0	78.6	77.1	-2.5	4.62	4.53
40.0	86.9	85.4	0	5.09	4.99
45.0	95.8	94.2	2.5	5.59	5.49
50.0	105.3	103.6	5	6.11	6.01
55.0	115.3	113.6	7.5	6.67	6.56
60.0	126.0	124.2	10	7.26	7.15
65.0	137.3	135.5	12.5	7.88	7.77
70.0	149.3	147.4	15	8.54	8.42
75.0	162.0	160.1	17.5	9.23	9.11
80.0	175.4	173.4	20	9.96	9.83
85.0	189.5	187.5	22.5	10.73	10.60
90.0	204.5	202.4	25	11.54	11.40
95.0	220.2	218.1	27.5	12.38	12.25
100.0	236.8	234.6	30	13.27	13.13
105.0	254.2	252.1	32.5	14.21	14.06
110.0	272.5	270.4	35	15.19	15.04
115.0	291.8	289.6	37.5	16.21	16.06
120.0	312.1	309.9	40	17.28	17.14
125.0	333.3	331.2	42.5	18.41	18.26
130.0	355.6	353.5	45	19.58	19.43
135.0	379.1	377.0	47.5	20.81	20.66
140.0	403.7	401.7	50	22.10	21.95
145.0	429.6	427.7	52.5	23.44	23.29
150.0	456.8	455.1	55	24.84	24.70
			57.5	26.31	26.16
			60	27.84	27.70
			62.5	29.44	29.31
			65	31.12	30.99

AZ-50 and 404A Refrigeration Grade Specifications

AZ-50 Assay (min. wt. % of all Fluorocarbons)	99.5
404A Assay (min. wt. % of all Fluorocarbons)	99.7
Moisture (max. wt. %)	0.0010
High-boiling Residue (max. vol. %)	0.01
Chloride (max. wt. %)	0.0001
Total Acidity (max. wt. %)	0.0001
Non-Condensibles in Vapor Phase (max. vol. %)	1.5

Performance Data

	Genetron AZ-50	R-502	R-404A
Evaporating Pressure			
psig	40.6	35.4	38.7
bar-gauge	2.80	2.44	26.7
Condensing Pressure			
psig	197.8	176.3	192.1
bar-gauge	13.64	12.15	13.25
Compression Ratio			
	3.84	3.81	3.87
	3.85	3.82	3.88
Compressor Discharge Temperature			
°F	94.9	99.7	96.19
°C	35.0	37.6	35.7
Temperature of Suction Gas			
°F	5.0	5.0	5.0
°C	-15.0	-15.0	-15.0
Specific Volume of Suction Vapor			
ft^3/lb	0.81	0.81	0.86
m^3/kg	0.051	0.051	0.054
Latent Heat of Vaporization			
Btu/lb	74.8	67.4	76.4
kJ/kg	173.9	156.7	177.7
Net Refrigeration Effect			
Btu/lb	47.4	45.5	49.3
kJ/kg	110.4	106.0	114.5
Coefficient of Performance (C.O.P.)	4.19	4.39	4.23
Horsepower per ton of Refrigeration	1.13	1.07	1.11
Refrigerant Circulated			
per ton (lb/min)	4.22	4.39	4.06
per kW (g/s)	9.05	9.44	8.74
Compressor Suction Gas Volume			
per ton (ft^3/min)	3.42	3.55	3.48
per kW (l/s)	0.46	0.48	0.47
Liquid Circulated			
per ton (in^3/min)	114.1	102.0	109.8
per kW (mL/s)	8.87	8.03	8.56

English Units: The data above indicates performance at Standard Ton Conditions (5°F evaporating and 86°F condensing). 100% isentropic efficiency.

SI Units: The data above at cooling load=1kW (-15°C evaporating and 30°C condensing)

Genetron® 404A vs. Genetron 507

Although Genetron® AZ-50® and Genetron 404A can be used in the same applications, there are some differences between the two refrigerants that may influence product selection.

– AZ-50 is an azeotrope demonstrating 0.1°F or less temperature glide.

– R-404A is a blend and must be liquid charged using a throttling device in the manifold hose.

– **Thermodynamic capacity:** R-507 is slightly higher than R-404A.

– **System capacity:** R-507 typically about 3% higher than R-404A.

– **Compressor efficiency:** R-507 is 1-2% higher than R-404A.

– **System efficiency:** R-507 is about 3-4% higher than R-404A. Field test data has ranged from 2-7%.

– The refrigerant-side heat transfer coefficient is higher for R-507 than R-404A. The presence of R-134a in R-404A increases mass transfer resistance that results in a decline in heat transfer.

Lubricants

Compressor lubricants used must be miscible with Genetron AZ-50 and Genetron 404A. Polyol ester lubricants are most commonly used. Most compressor manufacturers recommend specific polyol ester lubricants. Check with the equipment manufacturer for the recommended lubricants for their system.

Miscibility in Lubricants

Polyol ester lubricants are available in a wide viscosity range from as low as 15 centistokes (cs) to more than 220 cs at 104°F (40°C). Their range of miscibility with Genetron AZ-50 or Genetron 404A can vary widely. Miscibility is the ability of the refrigerant/lubricant mixture to form a single liquid phase.

Many commercial polyol esters provide miscibility with Genetron AZ-50 and Genetron 404A down to low temperatures. As shown in the following figure, the miscibility curve for Genetron AZ-50 or Genetron 404A with polyol ester lubricant is often concave. The refrigerant/lubricant mixture is miscible at low temperatures and becomes immiscible at higher temperatures. These mixtures exhibit lower critical solution temperatures. The lower critical solution temperature is the temperature below which the refrigerant mixtures remain miscible over the entire concentration range.

Miscibility Genetron AZ-50 or Genetron 404A and Polyol Ester Lubricant

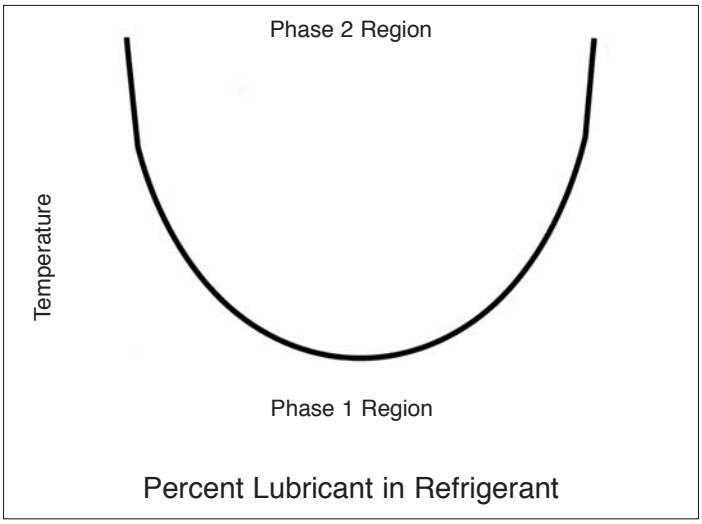

Stability with Metals

The stability of Genetron AZ-50 and Genetron 404A is very good for virtually all applications where R-502 is suitable. Genetron AZ-50 and Genetron 404A are compatible with steel, copper, aluminum and brass.

The stability of refrigerant/lubricant mixtures was determined for Genetron AZ-50 using the ASHRAE 97 sealed-tube method. Studies were conducted using sealed tubes of Genetron AZ-50 with polyol ester lubricants in the presence of three metal coupons (valve steel, copper and aluminum) for 14 days at 400°F (204°C). The stability was evaluated through both visual observation and measurement of the fluoride concentration produced in the tube.

On the basis of several tests, it is clear that Genetron AZ-50 is stable with polyol esters. A typical example of such tests is shown in the following table. Copper, steel and aluminum are stable with Genetron AZ-50 and the polyol esters studied. The stability of the refrigerant, as shown by the fluoride produced and the purity of the Genetron AZ-50 determined by chromatographic analysis, is excellent.

Genetron 404A is made up of the components HFC-125, HFC-143a and HFC-134a. The stability of Genetron 404A can be characterized based on the stability of its refrigerant components, in this case, by the known stability of Genetron AZ-50 and Genetron 134a.

Stability of Genetron® AZ-50® with Polyol Ester Lubricants and Metals

Lubricant	Lubricant Appearance	Copper	Aluminum	Steel	Fluoride (µS)	AZ-50 Purity
Mobil EAL 22	N.C.	N.C.	N.C.	Very light copper color for the portion immersed in the liquid.	12	N.C.
Mobil EAL 32	N.C.	N.C.	N.C.	N.C.	<10	N.C.
Castrol SW 32	N.C.	N.C.	N.C.	Slight black spots in the vapor phase region. Portion immersed in liquid is unchanged.	13	N.C.

*N.C. = No Change
Note: Test performed at 400°F (204°C) for 14 days

Chlorinated Materials and Refrigerants

There are three situations in which Genetron AZ-50 or Genetron 404A and compressor lubricants may come into contact with chlorinated materials. These instances are:

1. A chlorinated solvent is used to clean or flush the system.
2. A system is retrofitted from R-502, or
3. R-502 is accidentally charged into a system that contains Genetron AZ-50 or Genetron 404A.

It is recommended that chlorinated materials not be introduced into systems that used Genetron AZ-50 or Genetron 404A with polyol ester lubricants. While performing retrofits, the service technician should follow appropriate retrofit guidelines to help assure that residual chlorinated compounds are minimized. Genetron AZ-50 or Genetron 404A alone is chemically compatible with chlorinated materials. However, the polyol ester lubricants used can be incompatible with chlorinated materials. Chlorinated materials should not be introduced in to Genetron AZ-50 or Genetron 404A systems that use polyol ester lubricants without prior consultation with the equipment manufacturer.

Genetron AZ-50 or Genetron 404A Mixtures with R-502

The mixing of Genetron AZ-50 or Genetron 404A with R-502 should be avoided. The HFC-125 in Genetron AZ-50 or Genetron 404A can form an azeotrope with the CFC-115 component in R-502. Separation of HFC-125, HFC-143a, CFC-115, and HCFC-22 becomes difficult as a result. This will make recycling and reclamation very difficult or expensive, especially if it is desired to recover the original products.

Equipment

Compatibility: Plastics and Elastomers

Honeywell, in conjunction with the leading OEMs, has conducted materials testing to evaluate the compatibility of Genetron AZ-50 with materials used in refrigerant applications. The following list is a condensed sampling of the testing that has been performed to date. The information on this list is a first-level ranking of the compatibility of the materials. (Note: the compatibility of any specific material will be dependent on its formulation and history.) The ranking, although based on limited sampling can serve as a useful guide. Due to the similarity of Genetron® AZ-50® and Genetron 404A, the table below can also serve as a useful guide to the expected compatibility of Genetron 404A.

Materials Compatibility

Material	Genetron AZ-50	Genetron AZ-50 Polyol Ester
Ethylene-Propylene Diene terpolymer	S	S
Ethylene-Propylene copolymer	S	S
Chlorosulfonated Polyethylene	S	U
Polyisoprene	D	U
Chlorinated Polyethylene	S	U
Neoprene (Chloroprene)	S	D
Epichlorohydrin	D	U
Polyvinylidene fluoride and copolymer of vinylidene fluoride and hexafluoropropylene	U	U
Silicone	U	D
Polyurethane	D	D
Nitriles	D	D
H-NBR	D	S
Butyl rubber	D	S
Polysulfide	S	U
Nylon	S	D
Polytetrafluoroethylene	S	S
PEEK	S	S
ABS	D	U
Polypropylene	D	D
Polyphenylene sulfide	D	D
Polyethylene terephthalate	S	S
Polysulfone	S	S
Polyimide	S	D
Polyetherimide	S	S
Polyphthalamide	D	U
Polyamideimide	D	S
Acetal	S	U
Phenolic	S	D
Epoxy Laminate	S	S

Note: S: Suitable D: Suitability dependant on formulation
U: Unsuitable

In either case, rankings should be used with caution since they are judgements based on limited sampling. Customers should consult the manufacturer or do further independent testing

Desiccants

Three common types of desiccant materials are used in making driers. They are molecular sieves, alumina and silica gel. Molecular sieves XH7 and XH9 are recommended by UOP (a major molecular sieve manufacturer) for use with Genetron AZ-50. Similarly, Genetron 404A is compatible with XH7 and XH9. In addition, each drier manufacturer has developed driers and filters that are compatible with Genetron AZ-50 and Genetron 404A. Such driers can include all three types of drier materials.

Solubility of Water in Genetron AZ-50

The solubility of water in Genetron AZ-50 is shown in the graph below. The solubility of water in Genetron AZ-50 is comparable to that of water in R-502. Although not shown, the solubility of water in Genetron 404A would be comparable to that of water in Genetron AZ-50.

Solubility of Water in Genetron AZ-50

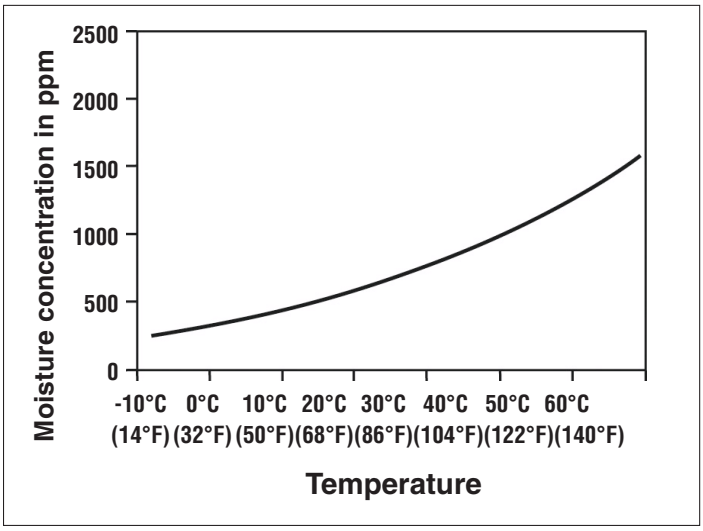

Safety

Honeywell recommends reading the MSDS before using any Genetron refrigerant. Any Genetron MSDS can be downloaded from www.genetron.com.

Toxicity

Genetron AZ-50 and Genetron 404A can be safely used in all of their intended applications based on data developed by Honeywell. This conclusion was reached after review of all toxicity results confirming the intrinsically low toxicity of these refrigerants. However, the end-user should read the Material Safety Data Sheet (MSDS) before using any Genetron refrigerant.

Inhalation

Genetron AZ-50 and Genetron 404A are of a low order of acute toxicity in animals. Vapor inhalation at high concentrations may result in asphyxiation or cardiac arrhythmia. If vapors are inhaled at high concentrations, cardiac irregularities and potentially cardiac arrest could occur. Under these circumstances, the heart may become sensitized. Do not administer adrenaline (epinephrine) if over-exposure to Genetron AZ-50 or Genetron 404A is suspected. These refrigerants are heavier than air and may displace oxygen. When concentrations of Genetron AZ-50 or Genetron 404A in air reach levels that reduce oxygen content to 14-16% by volume, symptoms of asphyxiation will occur. An individual exposed to high concentrations of Genetron AZ-50 or Genetron 404A must be given medical attention immediately. As with most refrigerants, adequate ventilation must be provided at all times.

Skin and Eye Contact

Genetron AZ-50 and Genetron 404A vapors have little or no effect on the skin and eyes. In liquid form, they can freeze skin or eyes on contact. If contact with the skin should occur, flush the exposed area with lukewarm water for 15 minutes to ensure the chemical is removed. If there is evidence of frostbite, soak affected area in lukewarm water. If contact with the eyes should occur, immediately flush with large amounts of lukewarm water for at least 15 minutes, occasionally lifting the eyelid to facilitate the flushing process. Seek medical attention immediately.

Leaks

Should a release of Genetron AZ-50 or Genetron 404A occur, the area must be evacuated immediately. Protected personnel should de-energize or remove any ignition sources and address the leak, if without risk. Vapors may concentrate near the floor, displacing available oxygen. Once the area is evacuated, it must be ventilated with blowers or fans to circulated the air at floor level. Unprotected personnel should not be allowed to return to the area until the air has been tested and determined safe.

Flammability

As defined by the U.S. Department of Transportation (DOT) regulations, flash point determinations do not apply to Genetron® AZ-50® and Genetron 404A. These refrigerants have no flame limits and DOT considers them non-flammable (Green Label). Underwriters' Laboratories® (UL) recognizes Genetron AZ-50 and Genetron 404A as practically non-flammable. According to ASHRAE Standard 34, Genetron AZ-50 and Genetron 404A are classified in Safety Group A1. Since these refrigerants do not have flash points and are non-flammable, Honeywell believes that standard industrial-type electrical installations may be used. It is essential to review and comply with all local building codes and other applicable regulations and laws when using Genetron AZ-50 or Genetron 404A.

Combustibility

Genetron AZ-50 and Genetron 404A are HFC refrigerants and are non-flammable at ambient temperatures and atmospheric

pressures. However, when mixed with air, HFCs can be combustible at higher pressures and temperatures. Because of this combustibility potential under pressure, Genetron AZ-50 or Genetron 404A and air should never be mixed in tanks or supply lines, or allowed to accumulate in storage tanks. Leak checking should never be done with mixtures of HFC refrigerants and air. Leak checking can be performed safely with a mixture of refrigerant and dry nitrogen. Anyone using or handling these refrigerants should first carefully review the Material Safety Data Sheet (MSDS).

Thermal Stability

Genetron AZ-50 and Genetron 404A are stable under normal operating conditions; however, it is important to avoid exposing these refrigerants to very high temperatures. When exposed to high temperatures, such as those found in flames or red-hot surfaces, the materials can decompose to produce toxic and corrosive compounds. Pungent odors released will irritate the nose and throat and generally force evacuation of the area. Contact with certain red-hot metals may result in exothermic or explosive reactions. Specific materials to avoid include freshly abraded aluminum surfaces and active metals such as sodium, potassium, aluminum, magnesium and zinc.

Storage and Handling

An important handling practice that must be followed for Genetron 404A is to ensure that all transfers be executed by using liquid charging instead of vapor charging. This practice will help minimize compositional changes.

Genetron AZ-50 and Genetron 404A cylinders must be clearly marked and kept in a cool, dry and properly ventilated storage area away from heat, flames, corrosive chemicals, fumes, explosives and be otherwise protected from damage. Disposable Jugs™ should be discarded in an environmentally safe manner in accordance with all laws and regulations.

Empty cylinders should be returned to Honeywell or your Genetron Wholesaler. Under no circumstance should anything be put into the empty cylinder. Prior to disposal, cylinder contents should be recovered to an internal pressure of 0 psig or less. Once empty, properly close the cylinder valve and replace the valve cap.

Keep cylinders out of direct sunlight, especially in warm weather.

Genetron AZ-50 and Genetron 404A liquid expand significantly when heated, reducing the amount of vapor space left in the cylinder. Once the cylinder becomes liquid-full, any further rise in temperature can cause it to burst, potentially resulting in serious personal injury.

NEVER ALLOW A CYLINDER TO GET WARMER THAN 125°F (55°C).

Always store cylinders above dirt or damp floors to prevent rusting, using a platform or parallel rails. SECURE CYLINDERS IN PLACE BY MEANS OF A RACK,CHAIN OR ROPE TO PREVENT THEM FROM TIPPING, FALLING, ROLLING OR ACCIDENTALLY STRIKING EACH OTHER OR ANY OTHER OBJECT. If the cylinder valve is broken off, rapid escape of the high-pressure contents will propel the cylinder, which could potentially result in serious injury. Keep cylinder caps in place until the cylinder is in use.

The storage area should be away from corrosive chemicals or fumes to avoid damaging effects on the cylinder and threaded areas of the valve. Follow similar precautions for bulk storage and transport systems, ensuring that proper design and operation satisfies the required pressure rating and also avoids external corrosive conditions, overheating or overfilling.

Maintenance

A thorough pre-job review must be done to determine the respiratory protection requirements, as well as any other safety equipment needed. Maintenance in areas where Genetron® AZ-50® or Genetron 404A has accumulated should be performed only after confirming that work area concentrations are below the permissible exposure level (PEL). This may be determined using a vapor-in-air analyzer capable of measuring the amount of airborne Genetron AZ-50 or Genetron 404A. These vapors are heavier than air and can accumulate at floor level. When vapor concentrations are above the PEL, the area should be ventilated to reduce the vapor concentration to below the PEL before entry. Ventilate the area using fans and other air movers as necessary. If entry must be made to areas where vapor concentrations are above the PEL, appropriate respiratory protection should be used.

Federal occupational health and safety agencies often have legal requirements and guidelines for proper selection and use of respiratory protection. It is often the responsibility of the employer to ensure the safety of the employees performing the maintenance. Be sure to comply with applicable laws and guidelines for proper selection and use of respiratory protection. If the airborne concentration of refrigerant is unknown or at a particular threshold, the law may require the use of supplied air respirators. Particular work team and work zone entry procedures may also apply.

Vessels, containers, transfer lines, pumps and other equipment should not be exposed to high-temperature sources (such as welding, brazing and open flames) until they have been thoroughly cleaned and found free of vapors. Exposure to these circumstances can cause fire, explosion and decomposition of

refrigerant. This may result in the formation of toxic or corrosive compounds. Potential sources for further vapor releases should also be eliminated if possible.

When possible, maintenance or cleaning of equipment should be performed without entering the vessel. A tank or storage vessel may be a confined space. These spaces may have a configuration that can hinder activities and/or expose personnel to the risk of physical injury from entrapment, engulfment, or hazardous atmospheres. Depending on conditions and applicable regulations, a permit may be required to enter such vessels. If a tank must be entered, personnel should be required to use a formal tank entry procedure based on recognized safety principles and comply with all applicable regulations. The procedure would provide guidance for critical items such as but not limited to respiratory protection, safety equipment, work practice, and communication. Among the possible requirements of these procedures is the use of a fully qualified work team and placement of a confined space entry permit at the job site.

Leak Detection

Use leak detectors for pinpointing leaks or for monitoring an entire room on a continual basis.

Leak detectors are important for refrigerant conservation, equipment protection and performance, reduction of environmental impact, and protection of those coming in contact with the system. There are two types of leak detection systems — leak pinpointing and area monitoring. Before purchasing either type, several equipment factors should be considered, including detection limits, sensitivity, and selectivity. Regarding selectivity, there are three categories: non-selective, halogen-selective, and compound selective. In general, complexity and cost of a leak detector increase as the specificity increases. A fluorescent dye compatible with the refrigerant and lubricant may also be used in conjunction with an ultraviolet lamp to pinpoint leaks.

New installations should be checked for leaks prior to complete charging. Whenever a leak inspection is performed, check all factory and field joints throughout the system. For a system that has been in operation for some time, check for oil at joints and connections, as this may serve as an indication of a refrigerant leak at that location. This approach would not commonly be considered when leak checking a new system installation since it is much less likely that oil will have found its way to the leak. If a system has lost all or most of its refrigerant charge, the system must be pressurized to about 150 psig in order to perform a leak check. Pressure can be restored for leak checking by adding Genetron® AZ-50® or Genetron 404A using normal charging procedures or by using dry nitrogen. DO NOT USE AIR TO LEAK CHECK THE SYSTEM. At pressures above atmospheric, mixtures of air and any HCFC or HFC refrigerant will become combustible. For a system containing either refrigerant or a mixture of refrigerant and nitrogen, an electronic leak detector can be used. The leak detector must be capable of detecting a hydrofluorocabon (HFC) refrigerant. Older leak detectors designed for R-22 will not be sensitive enough to effectively detect HFC refrigerants. Halide torches cannot effectively detect HFC refrigerant leaks.

NITROGEN IS A HIGH PRESSURE GAS. REMEMBER TO USE A PRESSURE REGULATOR COMING OFF THE NITROGEN TANK TO AVOID ANY RISK OF SEVERE PERSONAL INJURY.

A simple way to test for leaks is to use a solution of soap and water. Commercial soap solutions for leak detection tend to be more effective. Apply the solution to joints and connections. Generation of bubbles will indicate a pinhole leak. Several minutes may be required to generate a bubble in the case of a very small leak. When it is suspected that essentially no refrigerant remains in the system, the above method can be used to detect leaking nitrogen gas. However, the most convenient and effective means to detect a leak when Genetron AZ-50 or Genetron 404A is in the system is to use an electronic leak detector designed for HFC refrigerants. When a leak is found, the refrigerant must be recovered and the leak repaired prior to final charging and operation. If the refrigerant charge is 50 pounds or more, the system is subject to leak repair requirements under the Refrigerant Recycling Regulations of Section 608 of the Clean Air Act Amendments of 1990. In this case, the equipment owner must keep a record of the date and type of service performed and the amount of refrigerant added.

Environmental Considerations

Genetron AZ-50 and Genetron 404A are halogenated hydrocarbons. Treatment or disposal of wastes generated by use of these products may require special consideration, depending on the nature of the wastes and the means of discharge, treatment or disposal. For more information, refer to the Disposal Considerations and Regulatory Information sections of the Material Safety Data Sheet (MSDS).

If discarded unused, Genetron AZ-50 and Genetron 404A are not considered “hazardous waste” by the Resource Conservation and Recovery Act (RCRA). Because these refrigerants are considered to have minimum biodegradability, care should be taken to avoid releases to the environment. The disposal of Genetron AZ-50 and Genetron 404A may be subject to federal, state and local regulations. Users should conduct disposal operations in compliance with applicable federal, state and local laws and regulations. Appropriate regulatory agencies also should be consulted before discharging or disposing of waste materials.

Reclamation

The Clean Air Act Amendments of 1990 require mandatory recycling and reclamation of Genetron AZ-50 and Genetron 404A during maintenance, service or repair of air-conditioning and refrigeration equipment. Refrigerant that is too contaminated for reuse must be properly disposed of or reclaimed. In the U.S., reclamation can only be performed at an EPA (Environmental Protection Agency) approved reclamation facility before it may be resold to another party. Most Genetron refrigerant wholesalers will accept recovered Genetron AZ-50 and Genetron 404A for reclamation.

Retrofitting

Applications where Genetron AZ-50 or Genetron 404A are suitable retrofit replacement refrigerants include supermarket display cases, walk-in coolers, ice machines and other specialty applications.

Long-term vs. Interim Replacements

Where feasible, Genetron AZ-50 or Genetron 404A are the preferred retrofit replacements for R-502 in most OEM applications. In some cases, however, retrofitting with these refrigerants may be difficult because nearly all of the mineral oil in the system must be removed. For these instances, interim blends such as Genetron HP80 or Genetron 408A may be suitable options. These interim blends contain hydrochlorofluorocarbon (HCFC) refrigerants that have been shown to be ozone-depleting chemicals.

Technicians and end-users should keep in mind that future regulations may further restrict the use of HCFC-containing refrigerants and dictate the ultimate use of non-chlorine containing refrigerants such as Genetron® AZ-50® or Genetron 404A for servicing R-502 equipment.

Retrofit Lubricants

Genetron AZ-50 and Genetron 404A are not “drop-in” replacements for R-502. Mineral oils and alkylbenzene lubricants are immiscible with these refrigerants and therefore must be replaced with a miscible lubricant such as polyol ester lubricant. Consult the original equipment manufacturer for the recommended lubricant.

Retrofit Procedures

Retrofit procedures have been developed by Honeywell to help technicians perform successful retrofits of R-502 systems utilizing positive-displacement (reciprocating, rotary, scroll or screw) compressors with Genetron AZ-50 or Genetron 404A. However, these should not be used as substitutes for the equipment manufacturer’s specific recommendations. For further information on retrofitting with Genetron AZ-50 and Genetron 404A, refer to the Genetron Refrigeration Retrofit Guidelines bulletin G525-100.

Packaging

Genetron AZ-50 and Genetron 404A are available in a variety of containers including 24-lb. and 25-lb. disposable cylinders (404A and AZ-50 respectively), 100-lb. returnable cylinders, and one ton (1750-lb.) returnable tanks. Bulk tank trailers and isotanks are also available. Consult your Sales Representative if a larger container is required.

Technical Assistance

Honeywell technical specialists and sales representatives are available to assist customers with regard to all aspects relating to Genetron AZ-50 and Genetron 404A, including handling, use, storage, and applications design. For further information and/or technical assistance with Genetron refrigerants, contact:

Honeywell
Genetron Refrigerants
P.O. Box 1053
Morristown, NJ 07962-1053
Or call us at 1-800-631-8138

Available Literature

Honeywell has a wide range of literature available including MSDS sheets, retrofitting procedures, product specifications and product descriptions. For more information, call Honeywell at (800) 631-8138 or visit the Genetron web site at www.genetron.com. Most literature is also available through your local Genetron refrigerant wholesaler.

AZ-50 (R-507) Thermodynamic Table — English Units

Temp (°F)	Vapor Pressure (psia)	Liquid Volume (ft^3/lb)	Liquid Density (lb/ft^3)	Enthalpy Enthalpy (Btu/lb)	Vapor DH (Btu/lb)	Liquid Enthalpy (Btu/lb)	Vapor Entropy (Btu/lb-F)	Entropy (Btu/lb-F)
-60	11.8	3.5108	83.05	-5.95	85.92	79.97	-0.0145	0.2005
-58	12.5	3.3320	82.84	-5.36	85.62	80.26	-0.0130	0.2001
-56	13.2	3.1640	82.62	-4.77	85.32	80.55	-0.0116	0.1998
-54	14.0	3.0063	82.41	-4.18	85.01	80.83	-0.0101	0.1995
-52	14.7	2.8580	82.19	-3.58	84.70	81.12	-0.0086	0.1991
-50	15.6	2.7184	81.97	-2.99	84.40	81.41	-0.0072	0.1988
-48	16.4	2.5871	81.76	-2.39	84.08	81.69	-0.0057	0.1985
-46	17.3	2.4634	81.54	-1.80	83.78	81.98	-0.0043	0.1982
-44	18.2	2.3468	81.32	-1.20	83.46	82.26	-0.0029	0.1979
-42	19.1	2.2369	81.10	-0.60	83.15	82.55	-0.0014	0.1976
-40	20.1	2.1332	80.88	0.00	82.83	82.83	0.0000	0.1974
-38	21.1	2.0352	80.66	0.60	82.51	83.11	0.0014	0.1971
-36	22.2	1.9426	80.44	1.20	82.19	83.39	0.0028	0.1968
-34	23.3	1.8552	80.21	1.81	81.86	83.67	0.0043	0.1966
-32	24.5	1.7724	79.99	2.41	81.55	83.96	0.0057	0.1963
-30	25.7	1.6941	79.77	3.02	81.22	84.24	0.0071	0.1961
-28	26.9	1.6200	79.54	3.63	80.88	84.51	0.0085	0.1959
-26	28.2	1.5497	79.31	4.24	80.55	84.79	0.0099	0.1956
-24	29.5	1.4831	79.09	4.85	80.22	85.07	0.0113	0.1954
-22	30.9	1.4200	78.86	5.46	79.89	85.35	0.0127	0.1952
-20	32.3	1.3601	78.63	6.07	79.55	85.62	0.0141	0.1950
-18	33.8	1.3032	78.40	6.69	79.20	85.89	0.0155	0.1948
-16	35.3	1.2491	78.16	7.30	78.87	86.17	0.0168	0.1946
-14	36.9	1.1978	77.93	7.92	78.52	86.44	0.0182	0.1944
-12	38.5	1.1490	77.70	8.54	78.17	86.71	0.0196	0.1942
-10	40.2	1.1025	77.46	9.16	77.82	86.98	0.0210	0.1940
-8	42.0	1.0584	77.23	9.78	77.47	87.25	0.0223	0.1939
-6	43.8	1.0163	76.99	10.40	77.12	87.52	0.0237	0.1937
-4	45.6	0.9762	76.75	11.03	76.75	87.78	0.0251	0.1935
-2	47.5	0.9380	76.51	11.66	76.39	88.05	0.0264	0.1934
0	49.5	0.9016	76.27	12.28	76.03	88.31	0.0278	0.1932
2	51.6	0.8669	76.02	12.91	75.67	88.58	0.0291	0.1930
4	53.7	0.8337	75.78	13.55	75.29	88.84	0.0305	0.1929
6	55.8	0.8021	75.53	14.18	74.92	89.10	0.0319	0.1927
8	58.1	0.7719	75.29	14.81	74.54	89.35	0.0332	0.1926
10	60.4	0.7430	75.04	15.45	74.16	89.61	0.0346	0.1925
12	62.8	0.7154	74.79	16.09	73.78	89.87	0.0359	0.1923
14	65.2	0.6890	74.54	16.73	73.39	90.12	0.0372	0.1922
16	67.7	0.6638	74.28	17.37	73.00	90.37	0.0386	0.1920
18	70.3	0.6396	74.03	18.02	72.60	90.62	0.0399	0.1919
20	73.0	0.6165	73.77	18.67	72.20	90.87	0.0413	0.1918
22	75.7	0.5944	73.51	19.31	71.80	91.11	0.0426	0.1917
24	78.5	0.5732	73.25	19.96	71.40	91.36	0.0439	0.1915
26	81.4	0.5528	72.99	20.62	70.98	91.60	0.0453	0.1914
28	84.4	0.5333	72.72	21.27	70.57	91.84	0.0466	0.1913
30	87.4	0.5146	72.45	21.93	70.15	92.08	0.0479	0.1912
32	90.6	0.4967	72.19	22.59	69.72	92.31	0.0492	0.1911
34	93.8	0.4795	71.91	23.25	69.30	92.55	0.0506	0.1909
36	97.1	0.4629	71.64	23.91	68.87	92.78	0.0519	0.1908
38	100.5	0.4470	71.37	24.58	68.43	93.01	0.0532	0.1907
40	103.9	0.4318	71.09	25.25	67.98	93.23	0.0545	0.1906
42	107.5	0.4171	70.81	25.92	67.54	93.46	0.0559	0.1905
44	111.2	0.4030	70.53	26.59	67.09	93.68	0.0572	0.1904
46	114.9	0.3895	70.24	27.27	66.63	93.90	0.0585	0.1903
48	118.8	0.3764	69.95	27.95	66.16	94.11	0.0598	0.1902

AZ-50 (R-507) Thermodynamic Table — English Units – continued

Temp (°F)	Vapor Pressure (psia)	Liquid Volume (ft^3/lb)	Liquid Density (lb/ft^3)	Enthalpy Enthalpy (Btu/lb)	Vapor DH (Btu/lb)	Liquid Enthalpy (Btu/lb)	Vapor Entropy (Btu/lb-F)	Entropy (Btu/lb-F)
50	122.7	0.3638	69.66	28.63	65.69	94.32	0.0611	0.1900
52	126.7	0.3518	69.37	29.31	65.22	94.53	0.0625	0.1899
54	130.9	0.3401	69.07	30.00	64.74	94.74	0.0638	0.1898
56	135.1	0.3289	68.77	30.69	64.25	94.94	0.0651	0.1897
58	139.4	0.3181	68.47	31.38	63.76	95.14	0.0664	0.1896
60	143.9	0.3076	68.16	32.08	63.26	95.34	0.0677	0.1895
62	148.4	0.2976	67.86	32.78	62.75	95.53	0.0691	0.1893
64	153.1	0.2879	67.54	33.48	62.24	95.72	0.0704	0.1892
66	157.8	0.2785	67.23	34.19	61.71	95.90	0.0717	0.1891
68	162.7	0.2695	66.91	34.90	61.18	96.08	0.0730	0.1890
70	167.7	0.2608	66.58	35.61	60.65	96.26	0.0743	0.1888
72	172.8	0.2524	66.26	36.33	60.10	96.43	0.0757	0.1887
74	178.0	0.2442	65.92	37.05	59.54	96.59	0.0770	0.1886
76	183.3	0.2364	65.59	37.77	58.99	96.76	0.0783	0.1884
78	188.8	0.2288	65.25	38.50	58.41	96.91	0.0796	0.1883
80	194.3	0.2214	64.90	39.23	57.83	97.06	0.0810	0.1881
82	200.0	0.2143	64.55	39.96	57.25	97.21	0.0823	0.1880
84	205.8	0.2074	64.20	40.70	56.65	97.35	0.0836	0.1878
86	211.8	0.2007	63.84	41.45	56.04	97.49	0.0850	0.1877
88	217.8	0.1943	63.47	42.20	55.42	97.62	0.0863	0.1875
90	224.0	0.1880	63.10	42.95	54.79	97.74	0.0876	0.1873
92	230.3	0.1820	62.72	43.71	54.15	97.86	0.0890	0.1871
94	236.8	0.1761	62.34	44.48	53.49	97.97	0.0903	0.1870
96	243.4	0.1704	61.95	45.25	52.82	98.07	0.0917	0.1868
98	250.1	0.1649	61.55	46.02	52.14	98.16	0.0930	0.1866
100	257.0	0.1595	61.14	46.80	51.45	98.25	0.0944	0.1863
102	264.0	0.1543	60.73	47.59	50.74	98.33	0.0958	0.1861
104	271.2	0.1493	60.31	48.38	50.02	98.40	0.0971	0.1859
106	278.5	0.1443	59.88	49.19	49.27	98.46	0.0985	0.1856
108	285.9	0.1396	59.44	49.99	48.52	98.51	0.0999	0.1854
110	293.5	0.1349	58.99	50.81	47.74	98.55	0.1013	0.1851
112	301.3	0.1304	58.53	51.63	46.95	98.58	0.1027	0.1848
114	309.2	0.1260	58.06	52.47	46.13	98.60	0.1041	0.1845
116	317.3	0.1217	57.57	53.31	45.29	98.60	0.1055	0.1842
118	325.5	0.1175	57.08	54.16	44.43	98.59	0.1070	0.1839
120	333.9	0.1134	56.57	55.02	43.55	98.57	0.1084	0.1835
122	342.5	0.1094	56.04	55.89	42.64	98.53	0.1099	0.1832
124	351.2	0.1055	55.50	56.77	41.70	98.47	0.1113	0.1828
126	360.1	0.1017	54.94	57.67	40.72	98.39	0.1128	0.1823
128	369.2	0.0980	54.36	58.58	39.72	98.30	0.1143	0.1819
130	378.5	0.0943	53.76	59.51	38.67	98.18	0.1158	0.1814
132	387.9	0.0907	53.14	60.45	37.58	98.03	0.1174	0.1809
134	397.6	0.0872	52.48	61.41	36.45	97.86	0.1189	0.1803
136	407.4	0.0837	51.80	62.40	35.25	97.65	0.1205	0.1797
138	417.4	0.0803	51.08	63.40	34.01	97.41	0.1222	0.1791
140	427.7	0.0769	50.32	64.44	32.68	97.12	0.1238	0.1783
142	438.1	0.0735	49.52	65.51	31.28	96.79	0.1255	0.1775
144	448.8	0.0701	48.65	66.61	29.79	96.40	0.1273	0.1766
146	459.6	0.0667	47.72	67.76	28.17	95.93	0.1291	0.1756
148	470.8	0.0632	46.69	68.98	26.39	95.37	0.1311	0.1745
150	482.1	0.0597	45.55	70.26	24.44	94.70	0.1331	0.1732

404A Thermodynamic Table — English Units

Temp (°F)	Bubble Pressure (Liquid) (psia)	Dew Pressure (Vapor) (psia)	Vapor Volume (ft^3/lb)	Liquid Density (lb/ft^3)	Liquid Enthalpy (Btu/lb)	Enthalpy DH (Btu/lb)	Vapor Enthalpy (Btu/lb)	Liquid Entropy (Btu/lb^{-F})	Vapor Entropy (Btu/lb^{-F})
-60	11.6	11.1	3.8030	82.48	-6.00	87.60	81.60	-0.01	0.2051
-58	12.2	11.7	3.6063	82.27	-5.40	87.29	81.89	-0.01	0.2047
-56	12.9	12.4	3.4217	82.06	-4.81	86.99	82.18	-0.01	0.2043
-54	13.6	13.1	3.2485	81.85	-4.21	86.68	82.47	-0.01	0.2040
-52	14.4	13.9	3.0859	81.63	-3.61	86.37	82.76	-0.01	0.2036
-50	15.2	14.6	2.9330	81.42	-3.01	86.06	83.05	-0.01	0.2033
-48	16.0	15.4	2.7893	81.20	-2.41	85.75	83.34	-0.01	0.2030
-46	16.8	16.3	2.6540	80.99	-1.81	85.44	83.63	0.00	0.2026
-44	17.7	17.1	2.5266	80.77	-1.21	85.12	83.91	0.00	0.2023
-42	18.7	18.1	2.4066	80.56	-0.60	84.80	84.20	0.00	0.2020
-40	19.6	19.0	2.2935	80.34	0.00	84.49	84.49	0.00	0.2017
-38	20.6	20.0	2.1867	80.12	0.61	84.16	84.77	0.00	0.2014
-36	21.7	21.0	2.0859	79.90	1.21	83.85	85.06	0.00	0.2011
-34	22.7	22.1	1.9908	79.68	1.82	83.52	85.34	0.00	0.2009
-32	23.9	23.2	1.9008	79.46	2.43	83.19	85.62	0.01	0.2006
-30	25.0	24.3	1.8158	79.24	3.04	82.86	85.90	0.01	0.2003
-28	26.2	25.5	1.7353	79.02	3.65	82.54	86.19	0.01	0.2001
-26	27.5	26.7	1.6591	78.80	4.27	82.20	86.47	0.01	0.1998
-24	28.8	28.0	1.5870	78.57	4.88	81.87	86.75	0.01	0.1996
-22	30.1	29.3	1.5186	78.35	5.50	81.53	87.03	0.01	0.1994
-20	31.5	30.7	1.4538	78.12	6.11	81.19	87.30	0.01	0.1991
-18	33.0	32.1	1.3922	77.90	6.73	80.85	87.58	0.02	0.1989
-16	34.5	33.6	1.3339	77.67	7.35	80.51	87.86	0.02	0.1987
-14	36.0	35.1	1.2784	77.44	7.98	80.15	88.13	0.02	0.1985
-12	37.6	36.7	1.2257	77.21	8.60	79.81	88.41	0.02	0.1983
-10	39.3	38.3	1.1756	76.98	9.22	79.46	88.68	0.02	0.1981
-8	41.0	40.0	1.1280	76.74	9.85	79.10	88.95	0.02	0.1979
-6	42.7	41.7	1.0827	76.51	10.48	78.74	89.22	0.02	0.1977
-4	44.5	43.5	1.0396	76.27	11.11	78.38	89.49	0.03	0.1975
-2	46.4	45.4	0.9985	76.04	11.74	78.02	89.76	0.03	0.1973
0	48.4	47.3	0.9593	75.80	12.37	77.65	90.02	0.03	0.1972
2	50.4	49.3	0.9220	75.56	13.00	77.29	90.29	0.03	0.1970
4	52.4	51.3	0.8864	75.32	13.64	76.91	90.55	0.03	0.1968
6	54.5	53.4	0.8525	75.08	14.28	76.53	90.81	0.03	0.1967
8	56.7	55.6	0.8200	74.84	14.92	76.16	91.08	0.03	0.1965
10	59.0	57.8	0.7891	74.59	15.56	75.78	91.34	0.03	0.1964
12	61.3	60.1	0.7595	74.35	16.20	75.39	91.59	0.04	0.1962
14	63.7	62.5	0.7313	74.10	16.84	75.01	91.85	0.04	0.1961
16	66.2	64.9	0.7043	73.85	17.49	74.61	92.10	0.04	0.1959
18	68.7	67.4	0.6784	73.60	18.14	74.22	92.36	0.04	0.1958
20	71.3	70.0	0.6537	73.35	18.79	73.82	92.61	0.04	0.1956
22	74.0	72.7	0.6300	73.09	19.44	73.42	92.86	0.04	0.1955
24	76.7	75.4	0.6074	72.84	20.10	73.00	93.10	0.04	0.1954
26	79.5	78.2	0.5857	72.58	20.75	72.60	93.35	0.05	0.1952
28	82.4	81.1	0.5649	72.32	21.41	72.18	93.59	0.05	0.1951
30	85.4	84.0	0.5449	72.06	22.07	71.76	93.83	0.05	0.1950
32	88.5	87.1	0.5258	71.79	22.74	71.33	94.07	0.05	0.1948
34	91.7	90.2	0.5074	71.53	23.40	70.91	94.31	0.05	0.1947
36	94.9	93.4	0.4898	71.26	24.07	70.47	94.54	0.05	0.1946
38	98.2	96.7	0.4729	70.99	24.74	70.04	94.78	0.05	0.1945
40	101.6	100.1	0.4567	70.72	25.41	69.60	95.01	0.05	0.1943
42	105.1	103.5	0.4411	70.44	26.09	69.14	95.23	0.06	0.1942
44	108.7	107.1	0.4261	70.17	26.76	68.70	95.46	0.06	0.1941
46	112.3	110.7	0.4117	69.89	27.44	68.24	95.68	0.06	0.1940
48	116.1	114.5	0.3978	69.60	28.12	67.78	95.90	0.06	0.1939

404A Thermodynamic Table — English Units – continued

Temp (°F)	Bubble Pressure (Liquid) (psia)	Dew Pressure (Vapor) (psia)	Vapor Volume (ft^3/lb)	Liquid Density (lb/ft^3)	Liquid Enthalpy (Btu/lb)	Enthalpy DH (Btu/lb)	Vapor Enthalpy (Btu/lb)	Liquid Entropy (Btu/lb-°F)	Vapor Entropy (Btu/lb-°F)
50	120.0	118.3	0.3845	69.32	28.81	67.31	96.12	0.06	0.1937
52	123.9	122.2	0.3716	69.03	29.50	66.83	96.33	0.06	0.1936
54	128.0	126.3	0.3593	68.74	30.19	66.35	96.54	0.06	0.1935
56	132.1	130.4	0.3474	68.45	30.88	65.87	96.75	0.07	0.1934
58	136.4	134.6	0.3359	68.16	31.58	65.37	96.95	0.07	0.1932
60	140.7	138.9	0.3249	67.86	32.28	64.87	97.15	0.07	0.1931
62	145.1	143.4	0.3142	67.55	32.98	64.36	97.34	0.07	0.1930
64	149.7	147.9	0.3039	67.25	33.68	63.86	97.54	0.07	0.1929
66	154.4	152.5	0.2940	66.94	34.39	63.34	97.73	0.07	0.1927
68	159.1	157.3	0.2845	66.63	35.10	62.81	97.91	0.07	0.1926
70	164.0	162.1	0.2753	66.31	35.82	62.27	98.09	0.07	0.1925
72	169.0	167.1	0.2664	65.99	36.54	61.73	98.27	0.08	0.1923
74	174.1	172.2	0.2578	65.67	37.26	61.18	98.44	0.08	0.1922
76	179.3	177.4	0.2495	65.34	37.99	60.62	98.61	0.08	0.1921
78	184.6	182.7	0.2414	65.01	38.72	60.05	98.77	0.08	0.1919
80	190.1	188.1	0.2337	64.68	39.45	59.48	98.93	0.08	0.1918
82	195.7	193.7	0.2262	64.34	40.19	58.89	99.08	0.08	0.1916
84	201.3	199.3	0.2189	63.99	40.93	58.30	99.23	0.08	0.1914
86	207.2	205.1	0.2119	63.64	41.68	57.69	99.37	0.09	0.1913
88	213.1	211.1	0.2051	63.28	42.43	57.08	99.51	0.09	0.1911
90	219.2	217.1	0.1985	62.92	43.18	56.46	99.64	0.09	0.1909
92	225.4	223.3	0.1921	62.56	43.95	55.81	99.76	0.09	0.1908
94	231.7	229.6	0.1859	62.18	44.71	55.17	99.88	0.09	0.1906
96	238.1	236.0	0.1799	61.80	45.48	54.51	99.99	0.09	0.1904
98	244.7	242.6	0.1741	61.42	46.26	53.83	100.09	0.09	0.1902
100	251.5	249.3	0.1685	61.03	47.04	53.15	100.19	0.09	0.1900
102	258.3	256.2	0.1630	60.63	47.83	52.45	100.28	0.10	0.1897
104	265.3	263.2	0.1577	60.22	48.62	51.74	100.36	0.10	0.1895
106	272.5	270.3	0.1526	59.81	49.42	51.01	100.43	0.10	0.1893
108	279.8	277.6	0.1475	59.38	50.23	50.26	100.49	0.10	0.1890
110	287.2	285.1	0.1427	58.95	51.05	49.49	100.54	0.10	0.1888
112	294.8	292.7	0.1379	58.51	51.87	48.71	100.58	0.10	0.1885
114	302.6	300.4	0.1333	58.05	52.70	47.91	100.61	0.10	0.1882
116	310.5	308.3	0.1288	57.59	53.54	47.09	100.63	0.11	0.1879
118	318.5	316.4	0.1245	57.12	54.38	46.26	100.64	0.11	0.1876
120	326.7	324.6	0.1202	56.63	55.24	45.39	100.63	0.11	0.1873
122	335.1	333.0	0.1160	56.13	56.11	44.50	100.61	0.11	0.1869
124	343.7	341.5	0.1120	55.61	56.99	43.58	100.57	0.11	0.1865
126	352.4	350.2	0.1080	55.08	57.88	42.64	100.52	0.11	0.1861
128	361.3	359.1	0.1041	54.53	58.78	41.66	100.44	0.11	0.1857
130	370.3	368.2	0.1003	53.96	59.70	40.65	100.35	0.12	0.1853
132	379.6	377.5	0.0966	53.37	60.63	39.60	100.23	0.12	0.1848
134	389.0	386.9	0.0930	52.76	61.58	38.51	100.09	0.12	0.1843
136	398.6	396.6	0.0894	52.12	62.54	37.38	99.92	0.12	0.1837
138	408.4	406.4	0.0858	51.46	63.53	36.19	99.72	0.12	0.1831
140	418.4	416.4	0.0823	50.75	64.54	34.94	99.48	0.12	0.1824
142	428.6	426.6	0.0789	50.02	65.58	33.63	99.21	0.13	0.1817
144	439.0	437.1	0.0754	49.23	66.65	32.23	98.88	0.13	0.1809
146	449.6	447.8	0.0720	48.39	67.76	30.74	98.50	0.13	0.1801
148	460.4	458.6	0.0686	47.49	68.91	29.14	98.05	0.13	0.1791
150	471.5	469.8	0.0651	46.50	70.12	27.40	97.52	0.13	0.1780

AZ-50 (R-507) Thermodynamic Table — SI Units

Temp (°C)	Pressure (kPa)	Vapor Volume (m^3/kg)	Liquid Density (kg/m^3)	Liquid Enthalpy (kJ/kg)	Enthalpy DH (kJ/kg)	Vapor Enthalpy (kJ/kg)	Liquid Entropy (kJ/kg-C)	Vapor Entropy (kJ/kg-C)
-50	86	0.2080	1327	135.03	199.02	334.05	0.7395	1.6314
-49	91	0.1985	1324	136.27	198.38	334.65	0.7450	1.6301
-48	95	0.1896	1321	137.51	197.74	335.25	0.7505	1.6288
-47	100	0.1811	1318	138.75	197.10	335.85	0.7560	1.6276
-46	105	0.1731	1314	139.99	196.46	336.45	0.7615	1.6264
-45	110	0.1656	1311	141.24	195.81	337.05	0.7669	1.6252
-44	115	0.1584	1308	142.48	195.17	337.65	0.7724	1.6241
-43	121	0.1516	1305	143.73	194.51	338.24	0.7778	1.6229
-42	127	0.1451	1302	144.99	193.85	338.84	0.7832	1.6219
-41	133	0.1390	1299	146.24	193.19	339.43	0.7886	1.6208
-40	139	0.1332	1296	147.49	192.54	340.03	0.7940	1.6198
-39	145	0.1277	1292	148.75	191.87	340.62	0.7993	1.6188
-38	152	0.1224	1289	150.01	191.20	341.21	0.8047	1.6178
-37	158	0.1174	1286	151.28	190.52	341.80	0.8100	1.6168
-36	165	0.1127	1283	152.54	189.84	342.38	0.8153	1.6159
-35	173	0.1082	1280	153.81	189.16	342.97	0.8207	1.6150
-34	180	0.1039	1276	155.08	188.47	343.55	0.8260	1.6141
-33	188	0.0998	1273	156.35	187.79	344.14	0.8312	1.6132
-32	196	0.0959	1270	157.63	187.09	344.72	0.8365	1.6123
-31	204	0.0922	1266	158.90	186.40	345.30	0.8418	1.6115
-30	213	0.0887	1263	160.18	185.70	345.88	0.8470	1.6107
-29	222	0.0853	1260	161.46	184.99	346.45	0.8522	1.6099
-28	231	0.0821	1257	162.75	184.28	347.03	0.8575	1.6092
-27	240	0.0790	1253	164.04	183.56	347.60	0.8627	1.6084
-26	250	0.0760	1250	165.33	182.84	348.17	0.8679	1.6077
-25	260	0.0732	1246	166.62	182.12	348.74	0.8731	1.6070
-24	270	0.0706	1243	167.92	181.38	349.30	0.8783	1.6063
-23	281	0.0680	1240	169.22	180.65	349.87	0.8834	1.6056
-22	292	0.0655	1236	170.52	179.91	350.43	0.8886	1.6049
-21	303	0.0632	1233	171.82	179.17	350.99	0.8937	1.6043
- 20	315	0.0609	1229	173.13	178.41	351.54	0.8989	1.6037
-19	326	0.0588	1226	174.44	177.66	352.10	0.9040	1.6030
-18	339	0.0567	1222	175.76	176.89	352.65	0.9091	1.6024
-17	351	0.0548	1219	177.07	176.13	353.20	0.9142	1.6018
-16	364	0.0529	1215	178.39	175.36	353.75	0.9193	1.6013
-15	377	0.0511	1212	179.72	174.57	354.29	0.9244	1.6007
-14	391	0.0493	1208	181.04	173.79	354.83	0.9295	1.6001
-13	405	0.0476	1205	182.37	173.00	355.37	0.9346	1.5996
-12	420	0.0460	1201	183.71	172.20	355.91	0.9397	1.5991
-11	434	0.0445	1198	185.05	171.39	356.44	0.9447	1.5986
-10	450	0.0430	1194	186.39	170.58	356.97	0.9498	1.5980
-9	465	0.0416	1190	187.73	169.77	357.50	0.9548	1.5975
-8	481	0.0402	1187	189.08	168.94	358.02	0.9599	1.5971
-7	498	0.0389	1183	190.43	168.11	358.54	0.9649	1.5966
-6	514	0.0377	1179	191.78	167.28	359.06	0.9699	1.5961
-5	532	0.0364	1175	193.14	166.43	359.57	0.9750	1.5956
-4	549	0.0353	1172	194.51	165.57	360.08	0.9800	1.5952
-3	567	0.0341	1168	195.87	164.71	360.58	0.9850	1.5947
-2	586	0.0331	1164	197.25	163.83	361.08	0.9900	1.5943
-1	605	0.0320	1160	198.62	162.96	361.58	0.9950	1.5938
0	624	0.0310	1156	200.00	162.07	362.07	1.0000	1.5934
1	644	0.0300	1152	201.38	161.18	362.56	1.0050	1.5929
2	665	0.0291	1148	202.77	160.28	363.05	1.0100	1.5925
3	686	0.0282	1144	204.16	159.37	363.53	1.0150	1.5921
4	707	0.0273	1141	205.56	158.44	364.00	1.0199	1.5917

AZ-50 (R-507) Thermodynamic Table — SI Units – continued

Temp (°C)	Pressure (kPa)	Vapor Volume (m^3/kg)	Liquid Density (kg/m^3)	Liquid Enthalpy (kJ/kg)	Enthalpy DH (kJ/kg)	Vapor Enthalpy (kJ/kg)	Liquid Entropy (kJ/kg-C)	Vapor Entropy (kJ/kg-C)
5	729	0.0265	1136	206.96	157.51	364.47	1.0249	1.5912
6	751	0.0257	1132	208.37	156.57	364.94	1.0299	1.5908
7	774	0.0249	1128	209.78	155.62	365.40	1.0349	1.5904
8	798	0.0242	1124	211.20	154.65	365.85	1.0398	1.5900
9	822	0.0234	1120	212.62	153.68	366.30	1.0448	1.5895
10	846	0.0227	1116	214.04	152.71	366.75	1.0498	1.5891
11	871	0.0220	1112	215.47	151.71	367.18	1.0548	1.5887
12	897	0.0214	1107	216.91	150.70	367.61	1.0597	1.5883
13	923	0.0207	1103	218.35	149.69	368.04	1.0647	1.5878
14	949	0.0201	1099	219.80	148.66	368.46	1.0696	1.5874
15	977	0.0195	1094	221.25	147.62	368.87	1.0746	1.5869
16	1004	0.0190	1090	222.71	146.57	369.28	1.0796	1.5865
17	1033	0.0184	1085	224.18	145.50	369.68	1.0845	1.5860
18	1062	0.0179	1081	225.65	144.42	370.07	1.0895	1.5856
19	1092	0.0173	1076	227.13	143.32	370.45	1.0945	1.5851
20	1122	0.0168	1072	228.61	142.22	370.83	1.0995	1.5846
21	1153	0.0163	1067	230.10	141.09	371.19	1.1044	1.5841
22	1184	0.0159	1062	231.60	139.95	371.55	1.1094	1.5836
23	1216	0.0154	1058	233.10	138.81	371.91	1.1144	1.5831
24	1249	0.0150	1053	234.61	137.64	372.25	1.1194	1.5826
25	1283	0.0145	1048	236.13	136.45	372.58	1.1244	1.5821
26	1317	0.0141	1043	237.66	135.25	372.91	1.1294	1.5815
27	1351	0.0137	1038	239.19	134.03	373.22	1.1344	1.5810
28	1387	0.0133	1033	240.73	132.79	373.52	1.1394	1.5804
29	1423	0.0129	1028	242.28	131.54	373.82	1.1444	1.5798
30	1460	0.0125	1023	243.84	130.26	374.10	1.1495	1.5792
31	1498	0.0122	1017	245.41	128.96	374.37	1.1545	1.5785
32	1536	0.0118	1012	246.98	127.65	374.63	1.1595	1.5779
33	1575	0.0115	1007	248.57	126.31	374.88	1.1646	1.5772
34	1615	0.0111	1001	250.16	124.95	375.11	1.1697	1.5765
35	1655	0.0108	995	251.77	123.56	375.33	1.1748	1.5758
36	1697	0.0105	990	253.39	122.15	375.54	1.1799	1.5750
37	1739	0.0102	984	255.01	120.72	375.73	1.1850	1.5742
38	1781	0.0099	978	256.65	119.26	375.91	1.1901	1.5734
39	1825	0.0096	972	258.30	117.77	376.07	1.1953	1.5726
40	1870	0.0093	966	259.96	116.26	376.22	1.2004	1.5717
41	1915	0.0090	960	261.64	114.71	376.35	1.2056	1.5708
42	1961	0.0088	954	263.33	113.13	376.46	1.2108	1.5698
43	2008	0.0085	947	265.03	111.51	376.54	1.2161	1.5688
44	2056	0.0083	940	266.74	109.87	376.61	1.2213	1.5678
45	2104	0.0080	934	268.48	108.18	376.66	1.2266	1.5667
46	2154	0.0078	927	270.23	106.45	376.68	1.2320	1.5655
47	2204	0.0075	920	271.99	104.69	376.68	1.2373	1.5643
48	2256	0.0073	913	273.78	102.88	376.66	1.2427	1.5631
49	2308	0.0071	905	275.58	101.02	376.60	1.2481	1.5617
50	2361	0.0068	898	277.41	99.11	376.52	1.2536	1.5603
51	2415	0.0066	890	279.26	97.14	376.40	1.2591	1.5588
52	2470	0.0064	882	281.13	95.12	376.25	1.2647	1.5573
53	2527	0.0062	874	283.03	93.02	376.05	1.2703	1.5556
54	2584	0.0060	865	284.95	90.87	375.82	1.2760	1.5538
55	2642	0.0058	856	286.91	88.63	375.54	1.2818	1.5519
56	2701	0.0056	847	288.90	86.31	375.21	1.2876	1.5499
57	2761	0.0054	837	290.93	83.90	374.83	1.2936	1.5477
58	2823	0.0052	827	293.00	81.38	374.38	1.2996	1.5454
59	2885	0.0050	817	295.11	78.75	373.86	1.3058	1.5429
60	2949	0.0048	806	297.28	75.98	373.26	1.3120	1.5401

404A Thermodynamic Table — SI Units

Temp (°C)	Bubble Pressure (Liquid) (kPa)	Dew Pressure (Vapor) (kPa)	Vapor Volume (m^3/kg)	Liquid Density (kg/m^3)	Liquid Enthalpy (kJ/kg)	Enthalpy DH (kJ/kg)	Vapor Enthalpy (kJ/kg)	Liquid Entropy (kJ/kg-C)	Vapor Entropy (kJ/kg-C)
-50	84	81	0.2251	1318	134.59	202.92	337.51	0.7377	1.6491
-49	89	85	0.2147	1315	135.84	202.27	338.11	0.7433	1.6477
-48	93	90	0.2049	1312	137.09	201.63	338.72	0.7488	1.6463
-47	98	94	0.1956	1309	138.34	200.99	339.33	0.7543	1.6450
-46	102	99	0.1869	1306	139.59	200.34	339.93	0.7599	1.6437
-45	107	104	0.1786	1302	140.85	199.68	340.53	0.7653	1.6424
-44	113	109	0.1707	1299	142.10	199.04	341.14	0.7708	1.6412
-43	118	114	0.1633	1296	143.36	198.38	341.74	0.7763	1.6400
-42	124	119	0.1562	1293	144.62	197.72	342.34	0.7817	1.6388
-41	129	125	0.1495	1290	145.89	197.05	342.94	0.7872	1.6377
-40	135	131	0.1432	1287	147.15	196.38	343.53	0.7926	1.6365
-39	141	137	0.1372	1284	148.42	195.71	344.13	0.7980	1.6355
-38	148	143	0.1315	1281	149.69	195.04	344.73	0.8034	1.6344
-37	155	150	0.1260	1277	150.96	194.36	345.32	0.8088	1.6333
-36	161	157	0.1209	1274	152.23	193.68	345.91	0.8141	1.6323
-35	169	164	0.1160	1271	153.51	193.00	346.51	0.8195	1.6313
-34	176	171	0.1113	1268	154.79	192.31	347.10	0.8248	1.6304
-33	183	178	0.1069	1265	156.07	191.61	347.68	0.8301	1.6294
-32	191	186	0.1027	1261	157.35	190.92	348.27	0.8354	1.6285
-31	199	194	0.0986	1258	158.64	190.22	348.86	0.8407	1.6276
-30	208	202	0.0948	1255	159.93	189.51	349.44	0.8460	1.6267
-29	216	211	0.0912	1252	161.22	188.80	350.02	0.8513	1.6259
-28	225	220	0.0877	1248	162.52	188.08	350.60	0.8565	1.6250
-27	235	229	0.0843	1245	163.81	187.37	351.18	0.8618	1.6242
-26	244	238	0.0812	1242	165.11	186.64	351.75	0.8670	1.6234
-25	254	248	0.0781	1239	166.41	185.92	352.33	0.8723	1.6226
-24	264	257	0.0753	1235	167.72	185.18	352.90	0.8775	1.6219
-23	274	268	0.0725	1232	169.03	184.44	353.47	0.8827	1.6211
-22	285	278	0.0698	1229	170.34	183.70	354.04	0.8879	1.6204
-21	296	289	0.0673	1225	171.65	182.95	354.60	0.8930	1.6197
-20	307	300	0.0649	1222	172.97	182.19	355.16	0.8982	1.6190
-19	319	312	0.0626	1218	174.29	181.43	355.72	0.9034	1.6183
-18	331	324	0.0604	1215	175.61	180.67	356.28	0.9085	1.6177
-17	343	336	0.0583	1212	176.93	179.91	356.84	0.9137	1.6170
-16	356	348	0.0562	1208	178.26	179.13	357.39	0.9188	1.6164
-15	369	361	0.0543	1205	179.60	178.34	357.94	0.9240	1.6158
-14	382	374	0.0524	1201	180.93	177.56	358.49	0.9291	1.6152
-13	396	388	0.0506	1198	182.27	176.76	359.03	0.9342	1.6146
-12	410	402	0.0489	1194	183.61	175.97	359.58	0.9393	1.6140
-11	424	416	0.0472	1191	184.96	175.15	360.11	0.9444	1.6134
-10	439	431	0.0457	1187	186.31	174.34	360.65	0.9495	1.6129
-9	454	446	0.0441	1183	187.66	173.52	361.18	0.9546	1.6123
-8	470	461	0.0427	1180	189.01	172.70	361.71	0.9596	1.6118
-7	486	477	0.0413	1176	190.37	171.87	362.24	0.9647	1.6113
-6	502	494	0.0399	1172	191.74	171.02	362.76	0.9698	1.6107
-5	519	510	0.0386	1169	193.10	170.18	363.28	0.9748	1.6102
-4	537	527	0.0374	1165	194.48	169.32	363.80	0.9799	1.6097
-3	554	545	0.0362	1161	195.85	168.46	364.31	0.9849	1.6092
-2	573	563	0.0350	1158	197.23	167.59	364.82	0.9899	1.6087
-1	591	581	0.0339	1154	198.61	166.71	365.32	0.9950	1.6082
0	610	600	0.0328	1150	200.00	165.82	365.82	1.0000	1.6078
1	630	620	0.0318	1146	201.39	164.93	366.32	1.0050	1.6073
2	650	640	0.0308	1142	202.79	164.02	366.81	1.0100	1.6068
3	670	660	0.0298	1138	204.19	163.10	367.29	1.0151	1.6064
4	691	681	0.0289	1135	205.59	162.19	367.78	1.0201	1.6059
5	712	702	0.0280	1131	207.00	161.25	368.25	1.0251	1.6054

404A Thermodynamic Table — SI Units – continued

Temp (°C)	Bubble Pressure (Liquid) (kPa)	Dew Pressure (Vapor) (kPa)	Vapor Volume (m^3/kg)	Liquid Density (kg/m^3)	Liquid Enthalpy (kJ/kg)	Enthalpy DH (kJ/kg)	Vapor Enthalpy (kJ/kg)	Liquid Entropy (kJ/kg-C)	Vapor Entropy (kJ/kg-C)
6	734	724	0.0272	1127	208.41	160.32	368.73	1.0301	1.6050
7	757	746	0.0263	1123	209.83	159.37	369.20	1.0351	1.6045
8	780	769	0.0255	1119	211.26	158.40	369.66	1.0401	1.6041
9	803	792	0.0248	1115	212.68	157.43	370.11	1.0451	1.6036
10	827	816	0.0240	1110	214.12	156.45	370.57	1.0501	1.6032
11	852	840	0.0233	1106	215.56	155.45	371.01	1.0551	1.6027
12	877	865	0.0226	1102	217.00	154.45	371.45	1.0600	1.6022
13	902	890	0.0219	1098	218.45	153.44	371.89	1.0650	1.6018
14	928	916	0.0213	1094	219.90	152.42	372.32	1.0700	1.6013
15	955	943	0.0206	1089	221.36	151.38	372.74	1.0750	1.6009
16	982	970	0.0200	1085	222.83	150.32	373.15	1.0800	1.6004
17	1010	998	0.0194	1081	224.30	149.26	373.56	1.0850	1.5999
18	1039	1026	0.0189	1076	225.78	148.18	373.96	1.0900	1.5994
19	1068	1055	0.0183	1072	227.26	147.10	374.36	1.0950	1.5989
20	1097	1084	0.0178	1067	228.75	145.99	374.74	1.1000	1.5984
21	1127	1115	0.0172	1063	230.25	144.87	375.12	1.1050	1.5979
22	1158	1145	0.0167	1058	231.75	143.74	375.49	1.1100	1.5974
23	1190	1177	0.0163	1054	233.26	142.59	375.85	1.1150	1.5969
24	1222	1209	0.0158	1049	234.77	141.44	376.21	1.1200	1.5964
25	1255	1241	0.0153	1044	236.30	140.25	376.55	1.1250	1.5958
26	1288	1274	0.0149	1039	237.83	139.06	376.89	1.1300	1.5953
27	1322	1308	0.0144	1034	239.37	137.85	377.22	1.1351	1.5947
28	1357	1343	0.0140	1029	240.91	136.62	377.53	1.1401	1.5941
29	1392	1378	0.0136	1024	242.47	135.37	377.84	1.1451	1.5935
30	1428	1414	0.0132	1019	244.03	134.11	378.14	1.1502	1.5929
31	1465	1451	0.0128	1014	245.60	132.82	378.42	1.1552	1.5923
32	1503	1489	0.0125	1009	247.18	131.52	378.70	1.1603	1.5916
33	1541	1527	0.0121	1004	248.77	130.19	378.96	1.1654	1.5909
34	1580	1566	0.0118	998	250.37	128.84	379.21	1.1704	1.5903
35	1620	1605	0.0114	993	251.97	127.48	379.45	1.1755	1.5895
36	1660	1645	0.0111	988	253.59	126.08	379.67	1.1806	1.5888
37	1701	1687	0.0108	982	255.22	124.67	379.89	1.1858	1.5880
38	1743	1728	0.0105	976	256.86	123.22	380.08	1.1909	1.5872
39	1786	1771	0.0101	971	258.51	121.75	380.26	1.1961	1.5864
40	1829	1815	0.0099	965	260.17	120.26	380.43	1.2012	1.5855
41	1874	1859	0.0096	959	261.85	118.73	380.58	1.2064	1.5846
42	1919	1904	0.0093	953	263.53	117.18	380.71	1.2116	1.5837
43	1965	1950	0.0090	946	265.23	115.59	380.82	1.2169	1.5827
44	2012	1997	0.0087	940	266.95	113.97	380.92	1.2221	1.5817
45	2059	2044	0.0085	934	268.68	112.31	380.99	1.2274	1.5807
46	2108	2093	0.0082	927	270.42	110.63	381.05	1.2327	1.5796
47	2157	2142	0.0080	920	272.18	108.90	381.08	1.2381	1.5784
48	2207	2192	0.0077	913	273.96	107.12	381.08	1.2434	1.5772
49	2259	2244	0.0075	906	275.76	105.30	381.06	1.2488	1.5759
50	2311	2296	0.0072	899	277.57	103.44	381.01	1.2543	1.5746
51	2364	2349	0.0070	892	279.41	101.52	380.93	1.2598	1.5732
52	2418	2403	0.0068	884	281.27	99.55	380.82	1.2653	1.5717
53	2472	2458	0.0066	876	283.15	97.53	380.68	1.2709	1.5701
54	2528	2514	0.0064	868	285.06	95.44	380.50	1.2766	1.5685
55	2585	2571	0.0062	860	286.99	93.29	380.28	1.2823	1.5667
56	2643	2629	0.0059	851	288.96	91.05	380.01	1.2880	1.5648
57	2702	2688	0.0057	842	290.95	88.74	379.69	1.2939	1.5628
58	2762	2748	0.0055	833	292.99	86.33	379.32	1.2998	1.5607
59	2823	2809	0.0053	823	295.06	83.83	378.89	1.3059	1.5584
60	2885	2871	0.0051	813	297.18	81.22	378.40	1.3120	1.5559

Notes

Notes

Notes

Notes

Worldwide Sales Offices

For more information contact your
Honeywell Refrigerants representative

United States
Honeywell Chemicals
101 Columbia Road
Morristown, NJ 07962-1053
Phone: 800-631-8138
Fax: 973-455-6395

Latin America-Caribbean
Honeywell Chemicals Mexico
Constituyentes 900
Col. Lomas Altas
C.P. 11950, Mexico DF
Mexico
Phone: 52-55-5549-0313
Fax: 52-55-5544-9803

Canada
Honeywell Asca. Inc.
3333 Unity Drive
Mississauga, Ontario
L5L 3S6
Phone: 905-608-6325
Fax: 905-608-6327

Asia-Pacific
Honeywell (China) Co., ltd.
No 430, Li Bing Road
Zhang Jiang Hi-Tech Park
Pudong New Area, Shanghai 201203
China
Phone: 86-21-2894-2000
Fax: 86-21-5855-2719

Honeywell Chemicals Inc., Japan
New Pier Takeshiba
South Tower Building, 20th Floor
1-16-1 Kaigan, Minato-ku,
Tokyo, Japan
Phone: 81-3-6730-7083
Fax: 81-3-6730-7221

Honeywell Chemicals, Korea
6F Janghakjaedan, B/D 44-1
Bangpo-Dong, Seocho-Ku
Seoul 137040, Korea
Phone: 8-22-595-0204
Fax: 8-22-595-4964

Honeywell Specialty Chemicals (Singapore) Pte. Ltd.
17 Changi Business Park Central 1
Honeywell Building
Singapore 486073
Phone: 65-6355-2828
Fax: 65-6783-2947

Honeywell International
71 Queens Road, Ground Floor
Melbourne, Victoria 3004
Australia
Phone: 61-3-9529-1411
Fax: 61-3-9510-9837

Northern and Central Europe
Honeywell Belgium NV
Haasrode Research Park
Grauwmeer 1
3001 Heverlee
Belgium
Phone: 32-16-39-1278
Fax: 32-16-39-1277

Southern Europe, Middle East and Africa
Honeywell Fluorine Products Italia S.r.l.
Viale De Gasperi 19
20020 Lainate MI
Italia
Phone: +39-02-9379.6777 (ext 24 / 25 or 26)

www.honeywell.com/genetron

Customer Service

To place an order from anywhere in the
Continental United States, Hawaii and
the Caribbean:

Phone: 800-522-8001
Fax: 800-458-9073

In Canada:
Phone: 800-553-9749
Fax: 800-553-9750

Outside these areas:
Phone: 973-455-6300
Fax: 973-455-2763

Northern and Central Europe
Phone: +32-16-391.209
Phone: +32-16-391.265
Fax: +32-16-391.235

Southern Europe, Middle East and Africa
Phone: +39-02-9379.6777 (ext. 24 / 25 and 26)
Fax: +39-02-9379.6761

Honeywell

G 525-099
Printed in U.S.A.
© 2006 Honeywell International Inc.

THERMINOL® D12

Heat Transfer Fluids By SOLUTIA™

Applied Chemistry, Creative Solutions

D12

Combined Heating & Cooling Highly Stable Heat Transfer Fluid

-85°C to 260°C

+400°C
+350°C
+300°C
+250°C
+200°C
+150°C
+100°C
+50°C
+0°C
-50°C
-100°C

Moisture Removal from Therminol® D12 Cooling Systems

For heat transfer fluids used in cooling systems, it is important to prevent the chiller heat exchanger surface from being coated by ice. This icing will reduce the efficiency of the chiller and can occasionally cause blockage in the system piping.

Various methods of moisture removal are presented in the following sections.

Free water removal

If moisture is present in the system after the Therminol D12 is charged to the system, the moisture is often above the saturation level. This free water can be removed by opening the system low-point drains periodically after brief system circulation. The water should be allowed to settle for at least one hour before the low-point drains are checked for moisture.

Once the system is in operation, low levels of free water can be removed by filtration of ice particles in 100 mesh strainers.

After the free water is removed, the moisture level is at the saturation level (see figure 2). Although the Therminol D12 moisture saturation level is low compared to other organic coolants, the soluble moisture may cause icing problems in the cooling system.

Saturated water removal

The saturated moisture drying of Therminol D12 in the system can be accomplished by different methods.

Water removal by molecular sieves

Water can be removed from Therminol D12 by circulating the fluid over molecular sieves. The molecular sieves are placed in a side stream for bypass flow control.

Free water will saturate the molecular sieves, which will require frequent molecular sieve replacement or regeneration.

The moisture can be removed down to 1 ppm concentration level by this method.

The Nitrogen purge method

By running the system expansion tank hot, the moisture can be removed by purging nitrogen through the expansion tank vapour space. The fluid can be circulated through the expansion tank from 70°C to 170°C. Nitrogen is purged through the vapour space in the expansion tank from 4 to 24 hours.

Lower tank operating temperatures and slower nitrogen flow rates will increase the time required for the water removal.

System Design

Standard pressure vessels, pipework, valves and instruments certified up to 2 bar and for low temperatures have to be selected in all cases for heating and cooling operation mode when the system is designed to work up to 200°C. When the system operates at higher temperatures, it should be equipped and certified for 4 bar pressure.

Equipment design should take into account the low flash point of this product.

Therminol® D12 Water Solubility

Fig. 2

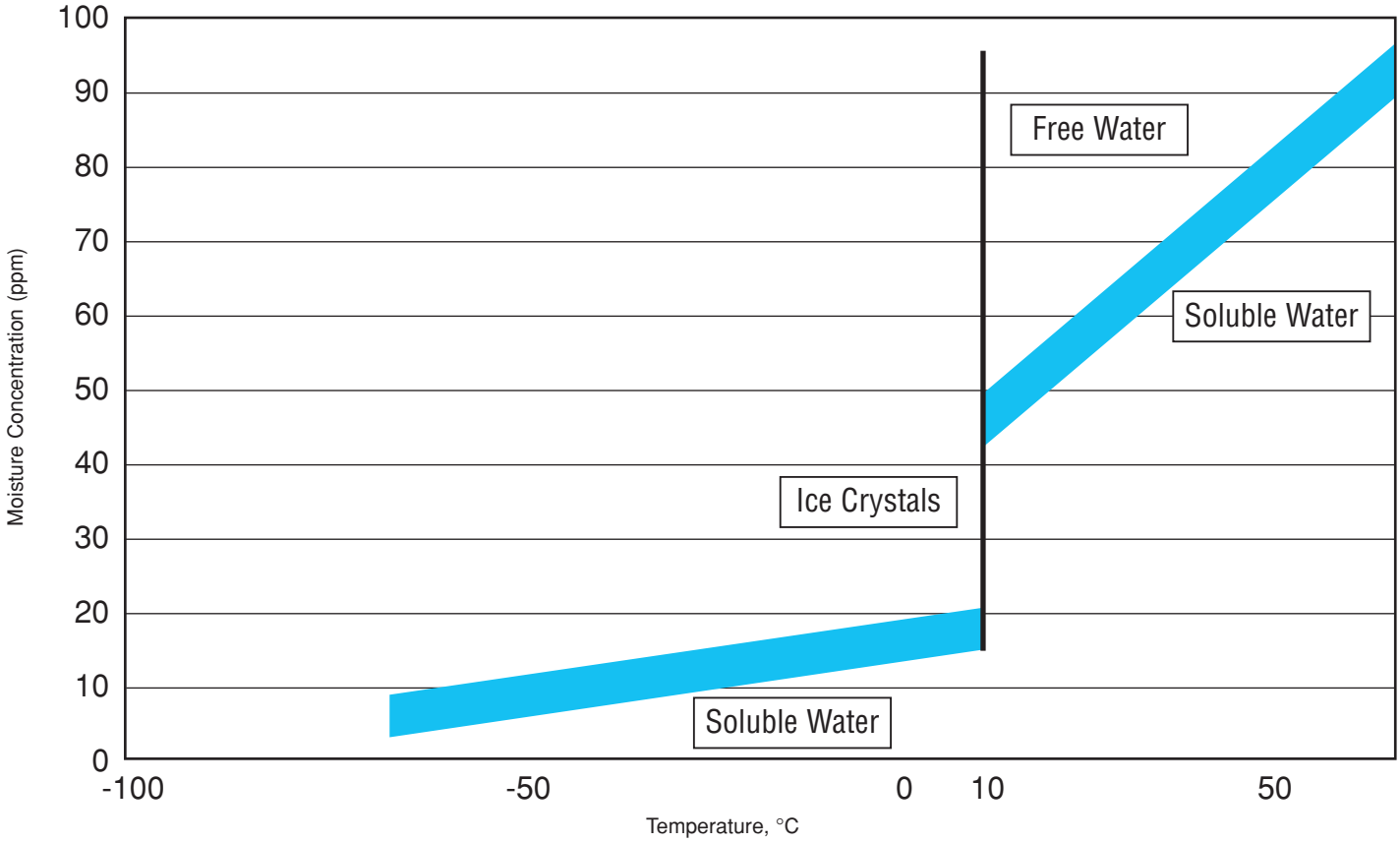

Therminol D12 is a heat transfer fluid specially developed for process cooling combined with moderate heating cycles using a single fluid in place of the traditional dual steam/brine or steam/glycol systems.

This fluid is of particular interest for applications in the pharmaceutical processes and for environmental test chambers. Therminol D12 has an operating temperature range of -85°C to 190°C without overpressure or up to 260°C with appropriate level of system pressurisation.

Therminol D12 is based on halogen-free chemistry, and it is considered non-hazardous and practically harmless for environmental purposes.

Thermal Stability

The thermal stability of a heat transfer fluid is one of the most important consideration in the selection of a fluid for operation under specific heat transfer conditions. Therminol D12 has made its reputation for its outstanding thermal stability.

Fluids such as Therminol D12 developed for use in single fluid combined heating and cooling systems, are generally selected with a good balance between low temperature pumpability and heat transfer properties and the ability to provide adequate heat input to the process, at temperatures up to 250°C.

Nevertheless proper design of fired or electrical heaters and of heat exchangers is an important aspect for the achievement of fluid performance and extended life, and bearing this in mind, the maximum bulk and film temperatures recommended for Therminol D12 are based on a combination of industrial experience and specific thermal studies with the aim of providing long fluid life and trouble free systems operation, without the risk of fouling or deposits.

Therminol D12 remains liquid and is easily pumped at temperatures down to minus 85°C. Start-up problems often associated with batch-processing systems are eliminated, and steam or electrical tracing is not required.

Typical Physical, Chemical and Thermal Properties of Therminol D12

Composition		Synthetic hydrocarbon
Appearance		Clear liquid
Max. bulk temperature		260°C
Max. film temperature		275°C
Kinematic viscosity @ 40°C	DIN 51562 - 1	1.23 mm^2/s (cSt)
Density @ 15°C	DIN 51757	764 kg/m^3
Flash point (Closed cup)	DIN EN 22719	59°C
Fire point	ISO 2592	71°C
Autoignition temperature	DIN 51794	277°C
Pour point	ISO 3016	<-85°C
Boiling point @ 1013 mbar		192°C
Coefficient of thermal expansion		0.00112/°C
Moisture content	DIN 51777 - 1	< 80 ppm
Total acidity	DIN 51558 - 1	<< 0.2 % mg KOH/g
Chlorine content	DIN 51577 - 3	<< 0.005 %
Copper corrosion	EN ISO 2160	<< 1a
Average molecular weight		180

Note: Values quoted are typical values obtained in the laboratory from production samples. Other samples might exhibit slightly different data. Specifications are subject to change. Write to Solutia for current sales specifications.

Properties of Therminol® D12 vs Temperatures

Temperature °C	Density kg/m³	Thermal Conductivity W/m.K	Heat Capacity kJ/kg.K	Viscosity Dynamic mPa.s	Viscosity Kinematic mm²/s**	Vapour pressure (absolute) kPa*
-85	835	0.124	1.635	295.878	354.345	-
-70	824	0.122	1.714	58.916	71.500	-
-60	818	0.121	1.759	23.922	29.245	-
-50	811	0.119	1.805	12.075	14.889	-
-40	804	0.118	1.850	7.059	8.780	-
-30	797	0.117	1.895	4.595	5.765	-
-20	790	0.116	1.941	3.234	4.094	-
-10	783	0.114	1.989	2.409	3.077	-
0	776	0.113	2.025	1.929	2.486	-
10	769	0.111	2.065	1.561	2.030	-
20	762	0.110	2.108	1.293	1.697	-
30	756	0.108	2.154	1.086	1.437	-
40	748	0.107	2.197	0.927	1.239	0.3
50	740	0.105	2.235	0.804	1.087	0.5
60	733	0.104	2.280	0.704	0.960	0.9
70	726	0.102	2.326	0.623	0.858	1.4
80	717	0.100	2.361	0.556	0.775	2.3
90	710	0.098	2.406	0.498	0.702	3.9
100	702	0.096	2.445	0.451	0.642	6.0
110	695	0.095	2.485	0.410	0.590	8.7
120	687	0.093	2.528	0.374	0.545	12.4
130	679	0.091	2.571	0.346	0.509	17.6
140	670	0.089	2.607	0.317	0.473	24.4
150	662	0.087	2.645	0.289	0.437	33.2
160	653	0.085	2.690	0.268	0.410	44.3
170	644	0.083	2.725	0.246	0.382	58.2
180	635	0.081	2.773	0.231	0.364	75.4
190	625	0.079	2.806	0.216	0.345	95.7
200	615	0.076	2.857	0.201	0.327	122.3
210	607	0.074	2.883	0.189	0.311	146.6
220	596	0.072	2.928	0.175	0.293	186.7
230	585	0.070	2.971	0.162	0.277	228.7
240	574	0.067	3.009	0.154	0.268	276.8
250	562	0.065	3.045	0.146	0.259	320.2
260	550	0.063	3.100	0.138	0.250	396.2

* 1 bar = 100 kPa - ** 1 mm²/s = 1 cSt

Note : Values quoted are typical values obtained in the laboratory from production samples. Other samples might exhibit slightly different data
Specifications are subject to change. Write to Solutia for current sales specification.

Physical Property Formulae

Density (kg/m³) = -0.696982 * T(°C) - 0.000131384 * T²(°C) - 0.00000209079 * T³(°C) + 776.257

Heat Capacity (kJ/kg.K) = 2.01422 + 0.00386884 * T(°C) + 2.05029 * 10^{-6} * T²(°C) - 1.12621 * 10^{-8} * T³(°C) + 3.86282 * 10^{-11} * T⁴(°C)

Thermal Conductivity (W/m.K) = 0.112994 - 0.00014781 * T(°C) - 1.61429 * 10^{-7} * T²(°C)

Kinematic Viscosity (mm²/s) = $e^{\left(\frac{530.944}{T(°C)+146.4} - 2.68168\right)}$

Vapour Pressure (mbar) = $e^{\left(\frac{-3562.69}{T(°C)+194} + 13.8526\right)}$

«Single Fluid» Combined Cycle Heating and Cooling Systems

Cycling temperatures through a wide temperature range in batch reaction processes, for example in small industrial or pilot scale production units, requires a heat transfer fluid with unique characteristics.

Until recently, the solution to these problems in combined heating and cooling systems operating over a wide temperature range has been to rely on «twin loop» systems, with two independent fluids - usually high pressure steam for the heating, and brine for the cooling loop.

Therminol D12 offers design and production engineers an unrivalled choice meeting their demands for efficiency and providing significant overall cost benefits when batch processing fine chemicals and pharmaceutical multi-purpose plants.

Therminol D12 has a number of practical advantages when used as a single fluid in dual-purpose heat transfer systems :

Closed loop systems with wide temperature range

Therminol D12 can be used in combined closed loop systems, to provide full heating and cooling capacity with the single fluid. This is a major advantage when compared with the «twin-fluid/twin-loop» concept, such as with steam/brine or steam/water-glycol, where flushing is required between cycles.

Reliable low temperature pumpability

Thermal degradation under operating conditions will not significantly alter the viscosity and pour point of the used fluid. The selection of minus 85°C for Therminol D12 minimum use temperature ensures that low temperature pumpability should always remain satisfactory in a well designed and maintained system.

Corrosion inhibitors not needed

Therminol D12 heat transfer fluid is non corrosive to carbon steel and common alloys of construction.

The need for the addition of costly and sometimes troublesome corrosion inhibitors, and in-service monitoring of inhibitors level is therefore avoided.

Typical Design - Heating and Cooling of Single User with one Fluid

The figure 1 shows a dual system for heating and cooling, using two separate circulating systems for a common user.

The temperature controller output is connected in a split range manner to the cold heat transfer fluid control valve. As the output increases from 0-55%, the cold fluid valve closes (with a minimum stop to prevent deadheading the cooling zone pump).

As the output increases from 45-100%, the hot fluid valve opens. The pressure control valve maintains a minimum flow through the heater in all conditions.

Even with the slight overlap in the cold and hot fluid valve ranges, this design operates with a minimum of interchange between the two circulating systems.

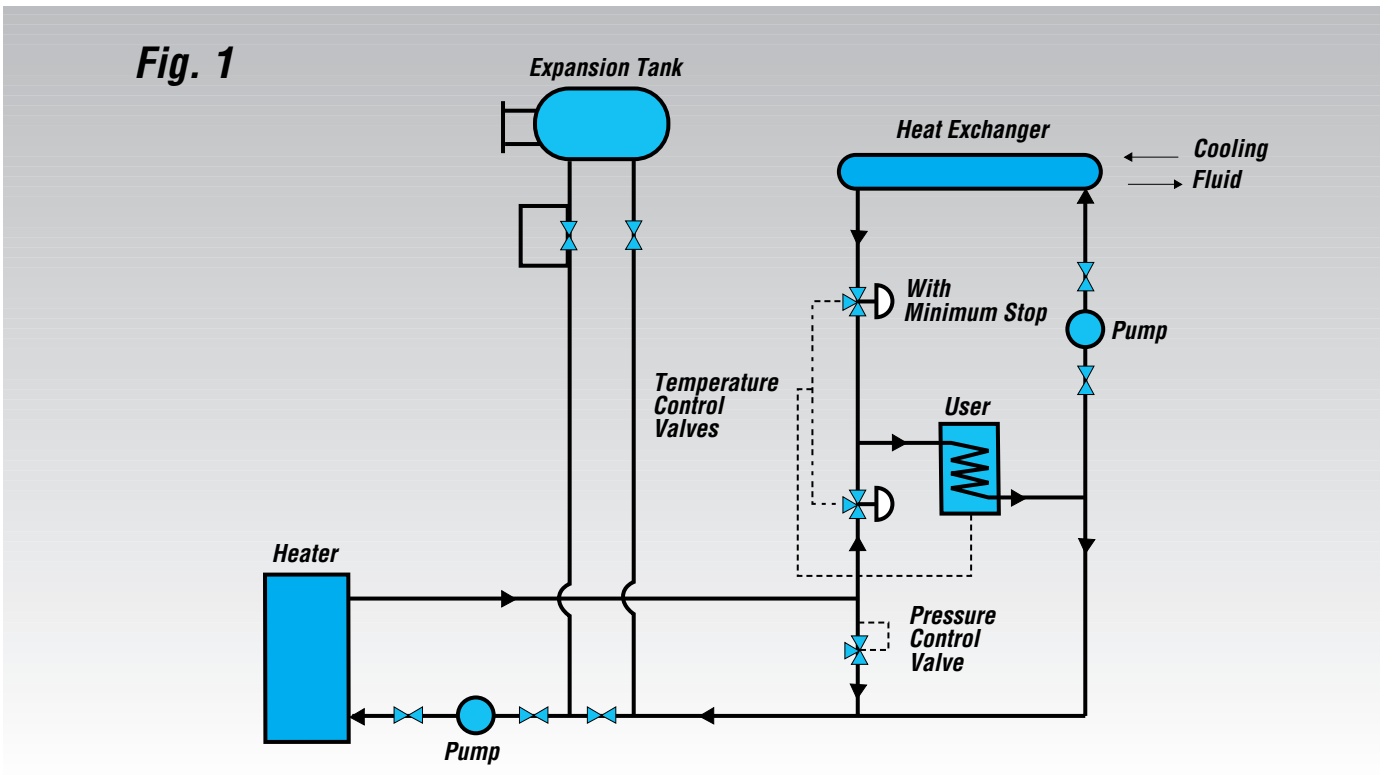

The Therminol® Range

Therminol D12 is one of the Solutia synthetic heat transfer fluids covering an operating range from -85°C to +400°C, suitable for most process heating or waste heat recovery applications, and capable of operation at or near atmospheric pressure within their recommended operating temperature range.

As a user's process temperature demands change there is always a Therminol fluid capable of meeting the new requirements. In addition Therminol fluids are often interchangeable allowing conversion by a simple top-up procedure where this is preferred.

Solutia also has a standard DP-DPO eutectic, Therminol VP-1.

Quality Management

All our manufacturing units have obtained ISO 9002 quality control certification. This registration means that plant procedures, quality control systems, material sampling, product storage, handling, packaging, shipping, product literature and characteristic data, record keeping and other company procedures are in line with the quality requirements of the ISO 9002 standards and its other national equivalents.

This is your quality assurance.

Health, Safety and Environmental Information

Please contact the Solutia Europe/Africa HQ for the Material safety data sheet, or if any other information concerning health, safety and environmental issues is required during filling or operation of your heat transfer system with this product.

Asia
Solutia Singapore Pte. Ltd.
101 Thomson Road - #19-00 United Square Singapore
307591
Tel.: (+65) 355 7231 - Fax: (+65) 254 3138

Latin America
Solutia Brasil Ltda.
Rua Gomes de Carvalho 1306 - 60 andar - conj. 61 e 62
CEP : 04547-005 • Vila Olímpia - Sao Paulo, SP, Brasil
Phone: (+55) 11-5087 3000 - Fax: (+55) 11-5087 3030

North America
Solutia Inc.
10300 Olive Boulevard - PO Box 66760
St Louis, MO 63166-6760 - USA
Tel.: (+1) 314 674 10 00

People's Republic of China
Solutia Chemical Co. Ltd., Suzhou
9th floor, Kings Tower
16 Shi Shan Road - Suzhou New District - Suzhou, PRC 215011
Phone: (+86) 512 8258167 - Fax: (+86) 512 8250417

SOLUTIA™
Applied Chemistry, Creative Solutions™

Europe
Solutia Europe S.A./N.V.
Rue Laid Burniat 3 - Parc Scientifique - Fleming
B-1348 Louvain-la-Neuve (Sud) - Belgium
Tel.: (+32) 10 48 15 47 - Fax: (+32) 10 48 14 86
http://www.solutia.com

Please contact us for more information :

Therminol is a trademark of Solutia. *Therminol* has now been adopted as a world-wide brand for the Solutia Heat Transfer Fluid range. Fluids known previously under the Santotherm and Gilotherm brands are identical in composition and performance to the corresponding *Therminol* brand fluids.

The information in this bulletin is to the best of our knowledge true and accurate but all instructions, recommendations or suggestions are made without guarantee. Since the conditions of use are beyond their control, Solutia Inc. and its subsidiaries disclaim any liability for loss or damage suffered from use of these data or suggestions. Furthermore no liability is accepted if use of any product in accordance with these data or suggestions infringes any patent.

GROUP PROVOC T.B.S 10-19 (12/98) E

M&M REFRIGERATION

STANDARD HORIZONTAL HIGH PRESSURE RECEIVERS

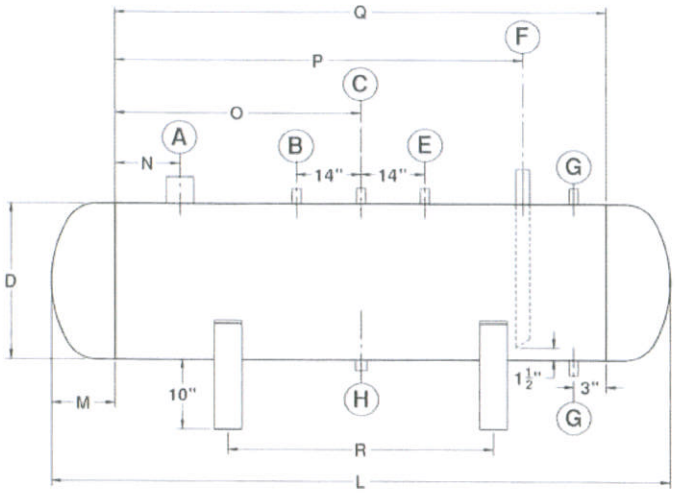

LEGEND

Nozzle	Description	Connection
A	Liquid Inlet	Stub
B	Purge	Coupling
C	Relief	Coupling
E	Equalizer	Stub
F	Liquid Outlet	Stub
G	Level Column	Stub
H	Drain	Coupling

MODEL #	A	B	C	D	E	F	G	H	L	M	N	O	P	Q	R	Weight (Lb)	Vol. (Cu. Ft.)	R-717 (Lb)
HR-20-110	1-1/2"	1/2"	1/2"	20"	3/4"	1"	3/4"	3/4"	110-3/4"	7-3/8"	3"	48"	78"	96"	55"	675	18.8	551
HR-20-134	1-1/2"	1/2"	1/2"	20"	3/4"	1"	3/4"	3/4"	134-3/4"	7-3/8"	3"	60"	102"	120"	67"	775	23.2	680
HR-24-136	2"	1/2"	3/4"	24"	3/4"	1-1/4"	3/4"	3/4"	136-1/2"	8-1/4"	3"	60"	102"	120"	68"	1340	33.0	967
HR-24-160	2"	1/2"	3/4"	24"	3/4"	1-1/4"	3/4"	3/4"	160-1/2"	8-1/4"	3"	72"	126"	144"	80"	1530	39.2	1148
HR-24-184	2"	1/2"	3/4"	24"	3/4"	1-1/4"	3/4"	3/4"	184-1/2"	8-1/4"	3"	84"	150"	168"	92"	1720	45.4	1330
HR-30-163	2-1/2"	1/2"	3/4"	30"	1"	1-1/4"	3/4"	3/4"	163-1/2"	9-3/4"	4"	72"	126"	144"	82"	1955	62.8	1840
HR-30-187	2-1/2"	1/2"	3/4"	30"	1"	1-1/4"	3/4"	3/4"	187-1/2"	9-3/4"	4"	84"	150"	168"	94"	2190	72.6	2127
HR-30-211	2-1/2"	1/2"	3/4"	30"	1"	1-1/4"	3/4"	3/4"	211-1/2"	9-3/4"	4"	96"	174"	192"	106"	2430	82.4	2414
HR-36-166	3"	1/2"	3/4"	36"	1"	1-1/2"	1"	3/4"	166-1/2"	11-1/4"	4"	72"	126"	144"	84"	3080	92.2	2701
HR-36-190	3"	1/2"	3/4"	36"	1"	1-1/2"	1"	3/4"	190-1/2"	11-1/4"	4"	84"	150"	168"	96"	3460	106.4	3117
HR-36-214	3"	1/2"	3/4"	36"	1"	1-1/2"	1"	3/4"	214-1/2"	11-1/4"	4"	96"	174"	192"	108"	3840	120.6	3533
HR-42-193	3"	1/2"	3/4"	42"	1-1/4"	1-1/2"	1"	3/4"	193-1/2"	12-3/4"	4"	84"	150"	168"	97"	4210	145.6	4265
HR-42-217	3"	1/2"	3/4"	42"	1-1/4"	1-1/2"	1"	3/4"	217-1/2"	12-3/4"	4"	96"	174"	192"	109"	4655	164.8	4828
HR-48-196	4"	1/2"	3/4"	48"	1-1/4"	2"	1"	3/4"	196-1/2"	14-1/4"	5"	84"	150"	168"	98"	6010	193.2	5660
HR-48-220	4"	1/2"	3/4"	48"	1-1/4"	2"	1"	3/4"	220-1/2"	14-1/4"	5"	96"	174"	192"	110"	6635	218.4	6398
HR-54-200	5"	3/4"	3/4"	54"	1-1/2"	2-1/2"	1"	1"	200"	16"	6"	84"	150"	168"	100"	5755	246.4	7218
HR-54-224	5"	3/4"	3/4"	54"	1-1/2"	2-1/2"	1"	1"	224"	16"	6"	96"	174"	192"	112"	6340	278.2	8150
HR-60-203	6"	3/4"	3/4"	60"	1-1/2"	3"	1-1/4"	1"	203"	17-1/2"	6"	84"	150"	168"	102"	8125	307.0	8994
HR-60-227	6"	3/4"	3/4"	60"	1-1/2"	3"	1-1/4"	1"	227"	17-1/2"	6"	96"	174"	192"	114"	8935	346.2	10142
HR-60-251	6"	3/4"	3/4"	60"	1-1/2"	3"	1-1/4"	1"	251"	17-1/2"	6"	108"	198"	216"	126"	9740	385.4	11291
HR-72-233	8"	3/4"	1"	72"	2"	4"	1-1/4"	1"	233"	20-1/2"	8"	96"	174"	192"	117"	13200	509.4	14923
HR-72-257	8"	3/4"	1"	72"	2"	4"	1-1/4"	1"	257"	20-1/2"	8"	108"	198"	216"	129"	14365	566.0	16581
HR-72-281	8"	3/4"	1"	72"	2"	4"	1-1/4"	1"	281"	20-1/2"	8"	120"	222"	240"	141"	15530	622.6	18240
HR-84-239	10"	1"	1"	84"	2-1/2"	5"	1-1/4"	1"	239"	23-1/2"	10"	96"	174"	192"	120"	15920	705.8	20677
HR-84-263	10"	1"	1"	84"	2-1/2"	5"	1-1/4"	1"	263"	23-1/2"	10"	108"	198"	216"	132"	17275	782.8	22933
HR-84-287	10"	1"	1"	84"	2-1/2"	5"	1-1/4"	1"	287"	23-1/2"	10"	120"	222"	240"	144"	18630	859.8	25189
HR-96-244	10"	1"	1"	96"	3"	5"	1-1/4"	1"	244-1/2"	26-1/4"	10"	96"	174"	192"	122"	21770	938.8	27503
HR-96-268	10"	1"	1"	96"	3"	5"	1-1/4"	1"	268-1/2"	26-1/4"	10"	108"	198"	216"	135"	23580	1039.4	30450

Notes:

All dimensions and Nozzle sizes are given in inches.

Volume is given in total cubic feet of vessel

Capacity is based on R-717 with vessel 80% full at 96 deg. F

Please consult factory for certified drawings.

20" thru 48" vessels are designed for 300# DWP -20 +200 Design Temp. per ASME Section VIII, Div. 1

54" and larger vessels are designed for 250# DWP -20 +200 Design Temp. ASME Section VIII, Division 1

M&M Refrigeration, Inc. · 412 Railroad Avenue · PO Box 449 · Federalsburg, Maryland 21632 · Tel: 410.754.8005
Fax: 410.754.5813 · sales@mmrefrigeration.com · www.mmrefrigeration.com

STANDARD VERTICAL RECIRCULATOR BARE VESSEL

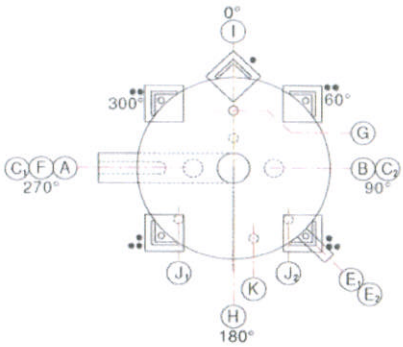

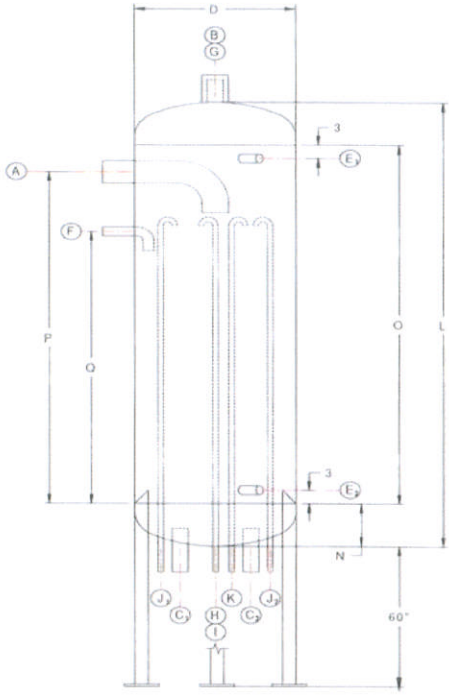

Nozzle	Description	Connection
A	Wet Return	Stub
B	Gas Outlet	Stub
C	Pump Suction	Stub
E	Float Column	Stub
F	Liquid Makeup	Stub
G	Relief	Coupling
H	Oil Drain	Stub
I	Oil Pot Vent	Coupling
J	Volute Vent	Stub
K	Liquid By-Pass	Stub
M	Pump Bleed	Stub

24" vessels have 3 legs (0 - 120 - 240)

30" and larger have 4 legs (45 - 135 - 225 - 315)

VERTICAL RECIRCULATOR DIMENSIONS

Model Numbe	A	B	C	D	E	F	G	H	I	J	K	L	N	O	P	Q	Surge Vol Cu. F	Wt. (Lb
VRC-24-112	5	4	2-1/2"	24"	1-1/2"	2"	3/4"	2"	3/4"	3/4"	1"	112-1/2"	8-1/4"	96"	90"	74"	14.99	1200
VRC-30-115	6	5	3"	30"	1-1/2"	2"	3/4"	2"	3/4"	3/4"	1-1/4"	115-1/2"	9-3/4"	96"	90"	74"	24.11	1475
VRC-36-118	6	6	4"	36"	1-1/2"	2"	3/4"	2"	3/4"	3/4"	1-1/4"	118-1/2"	11-1/4"	96"	90"	74"	35.08	2325
VRC-42-145	8	6	4"	42"	1-1/2"	2-1/2"	3/4"	2"	3/4"	3/4"	1-1/2"	145-1/2"	12-3/4"	120"	112"	94"	61.89	3200
VRC-48-148	8	8	5"	48"	1-1/2"	3"	3/4"	2"	3/4"	3/4"	1-1/2"	148-1/2"	14-1/4"	120"	112"	94"	81.33	4615
VRC-54-152	10	8	5"	54"	1-1/2"	3"	3/4"	2"	3/4"	3/4"	1-1/2"	152"	16"	120"	110"	91"	97.03	4420
VRC-60-155	10	8	5"	60	1-1/2"	3"	3/4"	2"	3/4"	3/4"	1-1/2"	155"	17-1/2"	120"	110"	91"	118.66	6140
VRC-72-161	12	10	6"	72"	1-1/2"	4"	1"	2"	3/4"	3/4"	1-1/2"	161"	20-1/2"	120"	108"	88"	161.53	9210
VRC-84-167	12	10	8"	84"	1-1/2"	4"	1"	2"	3/4"	3/4"	2"	167"	23-1/2"	120"	108"	88"	219.64	11175
VRC-96-172	14	12	8"	96"	1-1/2"	5"	1"	2"	3/4"	3/4"	2"	172-1/2"	26-1/4"	120"	106"	84"	266.47	15990

Notes:

All dimensions and Nozzle sizes are given in inches.

Please consult factory for certified drawings.

Surge volume is the amount of area between normal operating level and high level cutout.

24" thru 48" vessels are designed for 300# DWP -40 +200 Design Temp Per ASME Section VIII, Division 1

54" and larger vessels are designed for 250# DWP -40 +200 Design Temp Per ASME Section VIII, Division 1

VERTICAL RECIRCULATOR CAPACITIES

	OPERATING TEMPERATURE										
	TWO STAGE				SINGLE STAGE						
Model Numbe	-50	-40	-30	-20	-20	-10	0	+10	+20	+30	+40
VRC-24-112	51.9	64.3	77.8	92.1	80.1	92.7	105	120	134	147	149
VRC-30-115	82.1	102	123	145	126	147	166	189	213	234	251
VRC-36-118	117	146	176	209	181	210	237	271	305	334	359
VRC-42-145	161	200	242	287	249	288	326	372	418	459	492
VRC-48-148	212	263	318	376	327	379	428	490	549	603	647
VRC-54-152	270	334	405	478	416	481	544	623	698	767	822
VRC-60-155	334	414	501	593	516	597	674	771	865	950	1019
VRC-72-161	481	595	720	853	741	858	969	1109	1244	1366	1465
VRC-84-167	654	809	979	1159	1008	1167	1318	1508	1692	1858	1991
VRC-96-172	855	1056	1278	1513	1315	1522	1720	1968	2208	2425	2601

NOTES:

Capacities are given in tons of refrigeration. (R-717)

Two stage capacities are based on +35 deg. F liquid feed temperature.

Single stage capacities are based on +95 deg. F liquid feed temperature

M&M Refrigeration, Inc. · 412 Railroad Avenue · PO Box 449 · Federalsburg, Maryland 21632 · Tel: 410.754.8005
Fax: 410.754.5813 · sales@mmrefrigeration.com · www.mmrefrigeration.com

E70-610B SPC/SEP 2004

File: EQUIPMENT MANUAL - Section 70
Replaces: Nothing (new information)
Dist: 1, 1a, 1b, 1c, 4, 4b, 4c

RWF II

ROTARY SCREW COMPRESSOR UNITS
Models: 496 - 1080

FEATURES AND BENEFITS

RWF II Rotary Screw Compressor Units are engineered and manufactured to meet the exacting requirements of the Industrial Refrigeration Market. All components have been designed and arranged to assure reliability, accessibility, and servicing convenience. Standard units are designed for use as boosters or high-stage machines on ammonia or halocarbon refrigerants and are shipped completely assembled.

COMPRESSOR: The Frick manufactured **RWF II** compressor has been designed utilizing the latest technology to offer the most reliable and energy efficient unit currently available. Setup is easy thanks to the new D-flange connection on our low noise motor that is standard for the **RWF II**. All screw compressor casings are designed and tested in accordance with the requirements of ASHRAE 15 safety code. Rotors are manufactured from forged steel, and use the latest asymmetric profiles. The compressor incorporates a complete antifriction bearing design for reduced power consumption and the bearings selected provide an L10 life in excess of 100,000 hours at design conditions.

CAPACITY CONTROL: Capacity control is achieved by use of a slide valve which provides fully modulating capacity control from 100% to approximately 12% of full load.

"VOLUMIZER®" VARIABLE VOLUME RATIO CONTROL: The **RWF II** compressor includes a patented method of varying the internal volume ratio to match the system pressure ratio, eliminating the power penalty associated with over- or undercompression.

LUBRICATION SYSTEM: The **RWF II** compressor is designed specifically for operation without an oil pump. All oil required for main oil injection and lubrication is provided by positive gas differential pressure. All oil passes through the Frick SuperFilter™ II, specifically designed for increased particles capture and cleaner oil and compressor operation. SuperFilter™ II captures 99% of particles 5 microns and larger and has twice the dirt holding capacity of the original for maximum bearing life. It is also designed for horizontal mounting and furnished with isolation stop valves and drain connections for ease of servicing. Booster and some low-pressure differential, high-stage applications will require the demand oil pump option.

OIL SEPARATOR/RESERVOIR: The oil separator is a horizontal, three-stage design with integral sump. The separator is designed and constructed in accordance with ASME Section VIII, Div. 1 for a maximum design working pressure of 300 psig. Replaceable coalescent separator elements are provided for final gas/oil separation of particles down to less than 1 micron.

OIL COOLING: Cooling the compressor oil may be achieved by either EZ-Cool™ liquid-refrigerant-injection oil cooling, water-cooled oil cooling, or thermosyphon oil cooling. Water-cooled and thermosyphon oil-cooled systems are supplied with ASME plate and shell type heat exchangers mounted on the unit. They are also equipped with an oil temperature control valve.

QUANTUM™ LX CONTROL CENTER: The Quantum LX control panel is factory mounted, NEMA 4,UL ® listed, and completely wired with all the required safety and operating devices. A 10.4″ Active Color VGA Graphics Display offers a high contrast, crisp clear display of compressor information and status. Additional I/O can be easily installed in the field. This feature provides flexibility for future engine room upgrades and changes. Two field-selectable serial communication ports allow you to choose from a combination of RS-422, RS-485, or RS-232 port configurations for both interpanel and external communications. Ethernet communications are also available. Included in the micro-processor is time-proportioning capacity control, first-out annunciation, prealarms, volumizer control, real-time clock control, access code protection, lead-lag sequencing, alternate suction pressure operation, trending, and more. The operating conditions at the time of the compressor's last twenty alarms or shutdowns are stored in memory, providing the ultimate in service and troubleshooting convenience.

VALVES: The unit has a combination suction shut-off and check valve with strainer multivalve assembly. The unit's discharge has a mounted combination check and shut-off valve.

OPTIONAL FEATURES: Demand Oil Pump, Dual Oil Filters, Economizer, Oil Temperature Control Valve, Starter Packages, Unit-Mounted Solid-State Starter Packages, Power-Regulating Control Transformer, oversized Suction Valve.

STANDARD DESIGN DATA (with Metric equivalents) - NOMINAL @ 3550 RPM

MODEL NO.	COMPRESSOR DISPLACEMENT		RATINGS R-717 (1)(2)				RATINGS R-22 (1)(2)				UNIT WEIGHT (3)	
			CAPACITY		POWER		CAPACITY		POWER			
	CFM	M3/hr	TR	kw	BHP	kw	TR	kw	BHP	kw	lb	kg
496B	2,920	4,961	295	1,037	286	213	359	1,263	364	271	20,500	9,299
496H	2,920	4,961	1,054	3,706	1,182	881	946	3,328	1,178	878	NA	NA
676B	3,982	6,765	402	1,414	391	292	490	1,723	496	370	20,800	9,435
676H	3,982	6,765	1,422	5,002	1,612	1,202	1,206	4,241	1,615	1,204	NA	NA
856B	5,068	8,610	512	1,801	497	371	624	2,194	631	471	22,500	10,206
856H	5,068	8,610	1,807	6,354	2,056	1,533	1,511	5,315	2,165	1,615	NA	NA
1080B	6,394	10,862	645	2,268	629	469	787	2,769	902	673	23,100	10,478

1. Booster conditions are based on -40°F (-40°C) suction and 10°F (-12.2°C) intermediate temperature with liquid at interstage saturation and no superheat.
2. High stage conditions are based on 20°F(-6.7°C) suction and 95°F (35°C) condensing with 10°F (5.5°C) liquid subcooling and 10F(5.5C) superheat.
3. Unit weight does not include motor.
NOTE: All packages with motors larger than 1250 hp will require a vertical oil separator

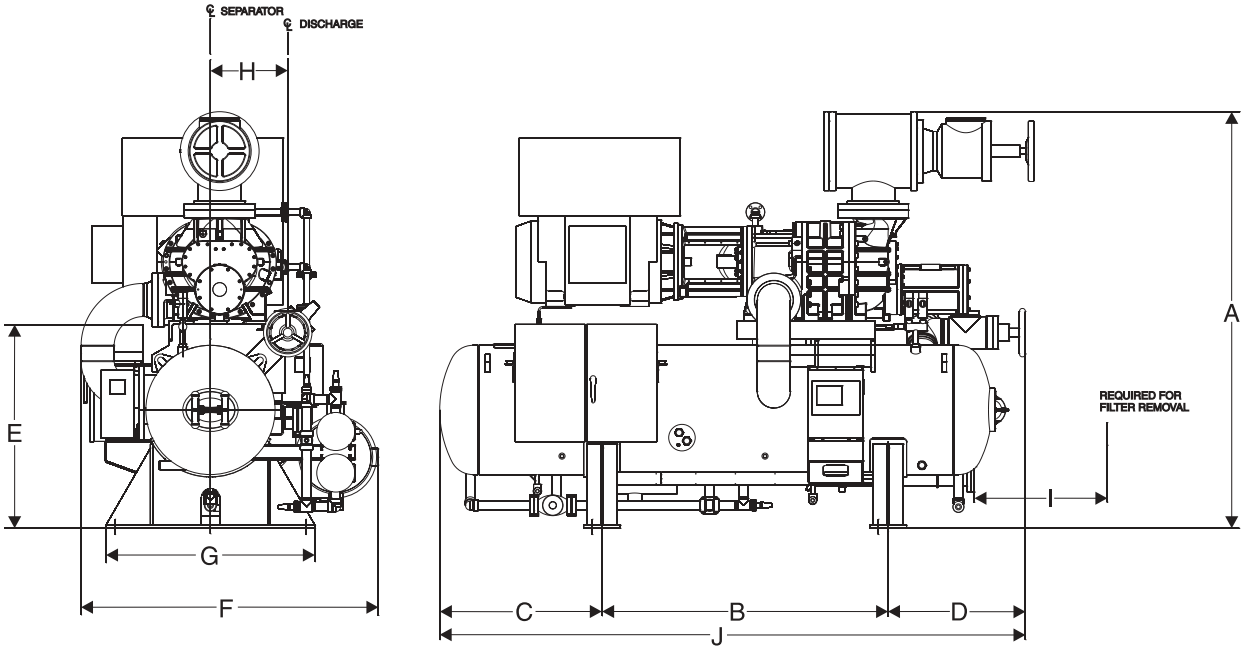

MODEL NO.	APPROXIMATE DIMENSIONS Inches/Millimeters									
	A	B	C	D	E	F	G	H	I	J
496	135/3440	93/2362	53/1340	45/1130	66/1682	97/2455	68/1727	25/638	39/991	191/4832
676	145/3675	96/2438	51/1302	49/1254	76/1930	103/2618	77/1956	26/666	39/991	196/4994
856	151/3834	96/2438	62/1572	50/1261	84/2128	109/2758	82/2083	28/720	39/991	208/5271
1080	151/3834	96/2438	62/1572	50/1261	84/2128	109/2758	82/2083	28/720	39/991	208/5271

NOTE: Graphic above for reference only. Other unit sizes vary slightly. Use only certified drawings for erection.

MODEL NO.	STANDARD CONNECTIONS in./mm			
	R-717		R-22	
	SUCTION	DISCHARGE	SUCTION	DISCHARGE
496	12/304.8	8/203.2	12/304.8	8/203.2
676	12/304.8	8/203.2	12/304.8	8/203.2
856	14/355.6	8/203.2	14/355.6	8/203.2
1080	14/355.6	8/203.2	14/355.6	8/203.2

Frick®
100 CV Avenue, P.O. Box 997
Waynesboro, Pennsylvania USA 17268-0997
Phone: 717-762-2121 • Fax: 717-762-8624 • www.frickcold.com
© 2004 YORK Refrigeration Systems

GEA
Refrigeration Division

Grasso

Grasso SP2 Series

Two-stage screw compressor packages

for industrial refrigeration

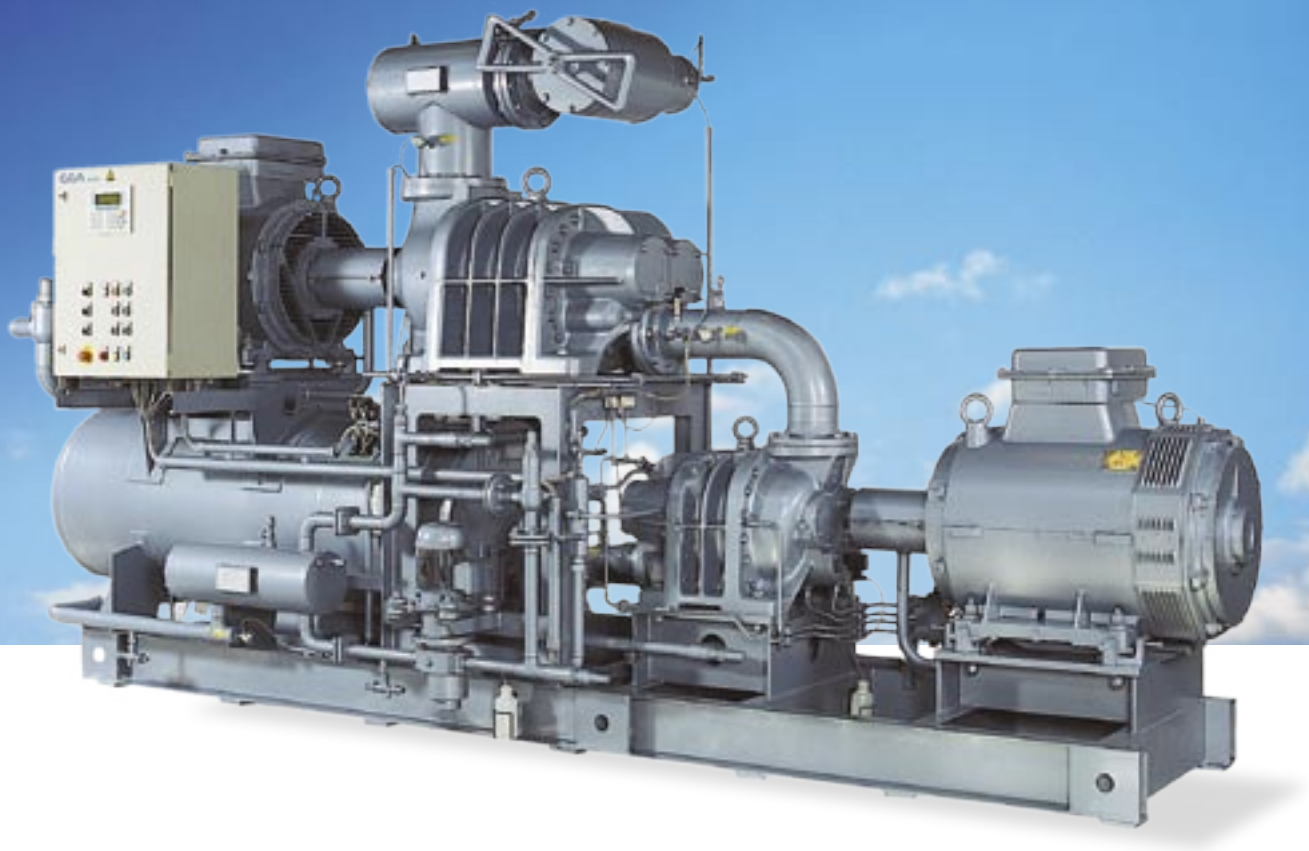

Grasso SP2

Product range

The entire programme of Grasso two-stage screw compressor packages contains 16 different basic models, using different booster compressors. Depending on refrigeration capacity required at intermediate temperature, a selection of compressors for the high pressure stage can be used. Due to this modular design, the capacity can be increased considerably, for less additional costs.

Features

- Low space requirement
- Compact and simple appearance due to the common oil supply system
- Optimized performance with two-stage operation and interstage cooling
- Exact adaptation to cooling capacity requirements through balanced selection programmes
- Unloaded start of both low- and high-pressure compressors
- Stepless capacity regulation
- Availability of additional intermediate cooling capacity due to the option of larger high-pressure compressors
- Stand-by facility through the individual operation of the high-pressure compressor

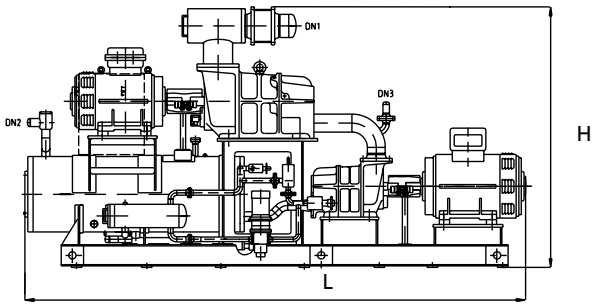

Standard package with Booster compressor type P to XC

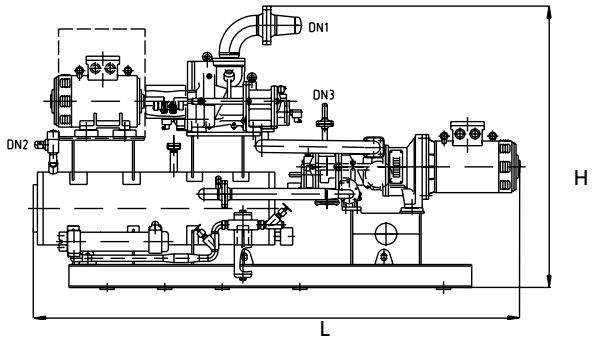

Standard package with Booster compressor type H, L, M, N

SP2 Package with Booster	Refrigeration Capacities (kW) at 2940 min^{-1}		Dimensions **) (mm)			Mass **) (kg)
	NH_3 *)-35/+35 °C	R404A *)-40/+35 °C	L	W	H	
H	119	116	3420 – 3790	1000	1970	2300
L	140	137	3420 – 3790	1000	1970	2400
M	176	170	3760 – 4130	1200	2150	3400
N	223	211	3760 – 4130	1200	2150	3600
P	209	197	3760 – 4130	1100	2150	2900
R	274	265	3760 – 4130	1200	2330	3100
S	341	330	4630 – 5110	1200	2400	3200
T	387	371	4630 – 5110	1200	2400	3350
V	458	427	4630 – 5110	1480	2530	3400
W	527	499	4630 – 5110	1480	2530	4000
Y	638	610	4630 – 5110	1480	2530	4200
Z	737	683	4630 – 5110	1480	2565	4400
XA	880	826	5500 – 5820	1660	2565	5950
XB	1094	987	5850 – 6600	1960	3250	9150
XC	1316	1224	5900 - 6650	2080	3250	11250
XD	1493	1340	6100 - 6830	2080	3250	13200

**) Capacity with interstage cooler **) Except for technical changes, Mass without motor*

Grasso Products b.v. • Parallelweg 27 • P.O. Box 343 • 5201 AH 's-Hertogenbosch • The Netherlands
Phone: +31 (0)73 - 6203 911 • Fax: +31 (0)73 - 6214 320 • E-Mail: products@grasso.nl

Grasso GmbH Refrigeration Technology • Holzhauser Straße 165 • 13509 Berlin • Germany
Phone: +49 (0)30 - 43 592 6 • Fax: +49 (0)30 - 43 592 777 • E-Mail: info@grasso.de

Find out more on our homepage www.grasso-global.com

TÜV CERT DIN EN ISO 9001 Certificate: 04 100 10414 Certificate: 01 100 80114

GEA Grasso
Refrigeration Division

A company of GEA Group

Please contact your office:

ca0349_Bro_SP2__gbr_03-06

Any data or other information in this brochure shall be deemed to be a general description of product properties and shall not be binding upon GEA. Binding product specifications may be agreed by GEA in bids, proposals, tenders or other offers issued in response to inquiries or calls for tenders or other invitations to bid.

AERO SYSTEMS ENGINEERING

PROJECT: P06151 – NASA GRC – Replacement of Refrigeration System for IRT, Bldg 9

CALCULATION PACKAGE: 3

TITLE: Coolant Loop's Tunnel Tube Fin Heat Exchanger

RESPONSIBLE ENGINEER Marksberry

APPROVED _____ DATE _____

REVISION	DATE	DESCRIPTION

		Submittal:	_____	Date:	_____
		Submittal:	_____	Date:	_____
		Submittal:	_____	Date:	_____
_____	Preliminary	Submittal:	_____	Date:	_____
_____	Final	Submittal:	_____	Date:	_____

Aero Systems Engineering, Inc
358 East Fillmore Avenue
St. Paul, Minnesota 55107-1289 U.S.A.
Web: www.aerosysengr.com
Phone: +1-651-227-7515
Fax: +1-651-227-0519
E-mail: ASE@AeroSysEngr.com

Introduction

Previously, in Calculation Package 2-, a plate-fin heat exchanger flowing a typical secondary fluid, Therminol D-12, was evaluated as a replacement for the existing tube and plate heat exchanger that has boiling R134a as the coolant. In this calculation, the existing tube plate was evaluated with respect to suitability for secondary fluid service.

Results and Conclusions

This initial or preliminary analysis shows that there exists a design window such the existing heat exchanger matrix can provide equal or better performance with Therminol D-12. It will require significant modifications to the external (of the matrix) geometry.

Discussion

Flow of a single phase coolant has significant different characteristics than boiling a refrigerant. Basically the flow rate will be quite high in order to limit the temperature rise of the coolant (i.e.; sensible heat transfer as compared to latent heat of vaporization). The flow passages can be roughly compatible because the heat exchanger tubes and return piping will be passing lower flow rate but also low density vapor phase. The inlet piping and pump power are likely to increase.

For the present analysis, the Firgid Coil “No Frost” design point performance prediction was used as the reference condition as was done for the plate-fin study. Therminol D-12 was chosen as the secondary transport fluid as was also done for the plate-fin analysis.

The flow configuration assumed that all flow orifices were removed (they are not necessary for single phase flow) and that external (to the matrix) liquid flow arrangement was modified. The selected arrangement that seemed to work well was a 4-pass cross-counterflow arrangement. Each pass used 4 or the available 16 rows of tube 9in the air flow direction. For simplicity and due to the current limitations of available spreadsheets, it was assumed that the fin density was 1.5 fpi throughout. The heat exchanger actually has 2 fpi on the last 4 tube rows. Therefore, the model will inherently underpredict both heat transfer and air side pressure loss.

The model used generalized curve fits to empirical that allow variation if tube spacing, tube diameter, fin spacing, etc. This is limited in accuracy and manufacturer’s proprietary data would be more definitive.

Two cases were considered to look at the sensitivity of D-12 flow. A comparison table is provided. There are small variations due assumed fluid property tables for air. The current calculations were for dry air whereas the Frigid Coil estimates were based on 45% entering relative humidity.. The low D-12 flow column about matches the Frigid Coil Performance. The other D-12 column is a 50% increase in assumed D-12 flow are resulted in an estimated tunnel temperature that is 4F lower than predicted by Frigid coil. This suggests that there is a little temperature difference to effect the D-12 to refrigerant heat transfer.

To the extent that the predictions are accurate, it seems possible that the existing heat exchanger can be rearranged with D-12 coolant and there could be no change in gross performance to either the tunnel or to the refrigeration system.

Please note that the estimates have not been independently verified, however, the computations appear to be at least reasonable. Also note that general data correlations were applied and manufacturer's data may be a bit different.

For a flowing secondary coolant situation, the orifice pressure loss will be very, very high so that all orifices must be eliminated. There are options with respect to secondary coolant flow, temperature, routing, and pressure loss. The 4-pass cross-counterflow arrangement is expected to give very good temperature uniformity at the heat exchanger exit face.

	A	B	C	D	E
1			Tubular	Tubular	Tubular
2	Coolant		D-12	D-12	134a
3	Coolant Flow	gpm	8745	13118	
4	Assumed Tin	F	-18	-18	-18
5	Estimated T out	F	-5.1	-9.4	
6	Estimated◊P	psid	8	17	
7	Assumed Air Flow	pps	1843	1843	1843
8	Estimated Tair in	F	10.52	6.6	11
9	Estimated Tair out	F	-2.42	-6.3	-1.4
10	Estimated ◊T		12.9	12.9	12.4
11					
12	required Heat Rate	MW	5858	5858	5858
13	Estimated◊P	psid	0.08	0.08	0.033
14	Cap. Rate Ratio		0.99	0.66	
15	Ther. Cond. Ratio		0.76	0.55	

AERO SYSTEMS ENGINEERING

PROJECT: P06151 – NASA GRC – Replacement of Refrigeration System for IRT, Bldg 9

CALCULATION PACKAGE: 4

TITLE: Large Piping Sizes

RESPONSIBLE ENGINEER Marksberry

APPROVED _____ DATE _____

REVISION	DATE	DESCRIPTION
1	March 5, 2007	Option 3 and Misc. Adjustments

Submittal: _____ Date: _____
Submittal: _____ Date: _____
Submittal: _____ Date: _____
_____ Preliminary Submittal: _____ Date: _____
_____ Final Submittal: _____ Date: _____

Aero Systems Engineering, Inc
358 East Fillmore Avenue
St. Paul, Minnesota 55107-1289 U.S.A.
Web: www.aerosysengr.com
Phone: +1-651-227-7515
Fax: +1-651-227-0519
E-mail: ASE@AeroSysEngr.com

JOB:	NASA GRC – Replacement Refrigeration System for IRT, Bldg 9				CODE/JOB NO.	P05151
COMPONENT:	Large Piping Sizes				REF:	
SUBJECT:	Scaling of Pipe					
Prepared By Marksberry	**Date** Feb. 26, 07	**Approved By**	**Date**	**Revised By**	**Date**	**Pkg.** 004 **Sht** 1 **Of**

Background

There are three basic refrigeration systems being evaluated for the IRT tunnel. It is necessary to do a cost evaluation which includes major ancillary equipment, piping and flow elements. The engineering development is on very conceptual basis, so the sizing and costs will be mainly relative to each other and to existing equipment.

Much of the following information will be come obsolete as work on the project proceeds. At the current moment, 2/19/2007, the process pass has been completed for Option 1, the R134a system, and has not really started for Options 2 and 3.

There are two distinct sections to this calculation. The first section relates to size and costing that occurs after the process analysis of the refrigeration system. The second is a general process analysis, done before specific process details from Sietech.

Post Sietech Process Analysis

The following is the process background for Option size and cost work. This information was developed from Sietech process information. As of Feb. 21, 2007 or so, consistent process information became available for all three options.

	A	B	C	D	E	F	G	H	I	J	K	L	M	N
1	Per 2/19/2007 Sietech Process Diagram Rev. 1													
2	**Option 1**	**lb/min**	**Quality**	**Qty**			**Flow Divisor**	**Flow per line**	**Psizing**	**T**	Density	**Assumed q**	**Diam**	**Diam**
3		**5,673**						**pps**	psia	F	lbm/ft3	psid	inches	inches
4	High Stage Discharge to Condensor (out of compressor to crossovcer)	8,249	Superheated Vapor	2	350 PSI	200 F	1	137.48	200	200	**3.37**	**0.25**	16.90	18
5	High Stage Discharge to Condensor (Downstream of cross-vover)	8,249	Superheated Vapor	2	350 PSI	200 F	2	68.74	200	200	**3.37**	**0.25**	11.95	12
6	High Stage Discharge Crossever	**4,125**	Superheated Vapor	2	350 PSI	200 F	2	34.37	200	200	**3.37**	**0.25**	8.45	**8**
7	Condensor to HP Receiver	8,249	Saturated Liquid	2	350 PSI	100 F	2	68.74	200	100	**72.38**	**0.25**	5.55	6
8	Condensor to HP Receiver	8,249	Saturated Liquid	2	350 PSI	100 F	1	137.48	200	100	**72.38**	**0.25**	7.85	8
9	HP Receiver to Economizer	8,249	Saturated Liquid	1	350 PSI	100 F	1	137.48	200	100	**72.38**	**0.25**	7.85	8
10	Economizer to Control Valve	5,672	Subcooled liquid	1	350 PSI	-20 to 20 F	1	94.53	200	0	**84.60**	**0.25**	6.26	6
11	Control Valve to Flash Cooler (size for vapor only)	5,672	80% Liquid/ 20% Vapor	1	150 PSI	0 to -65 F	5	18.91		-55	**0.11**	**0.075**	19.80	20
12	Flash Cooler to Pumps	**6,340**	Saturated Liquid	1	150 PSI	0 to -65 F	1	105.67		-55	**90.00**	**0.25**	6.52	**8**
13	Pumps to Heat Exchanger	**6,340**	Subcooled Liquid	1	150 PSI	0 to -65 F	1	105.67		-55	**90.00**	**0.25**	6.52	**8**
14	Heat Exchanger to Flash Cooler (size for vapor only)	**6,340**	30% Liquid/ 70% Vapor	1	150 PSI	0 to -65 F	1.43	73.97		-55	**0.11**	**0.075**	39.15	**40**
15	Flash Cooler to Low Stage Suction, Main 5672 tot -2836 leg	5672.00	Saturated Vapor	3	150 PSI	0 to -65 F	1	94.53		-55	**0.11**	**0.05**	48.99	48
16	Flash Cooler to Low Stage Suction, Leg 5672 tot -2836 leg	5672.00	Saturated Vapor	3	150 PSI	0 to -65 F	2	47.27		-55	**0.11**	**0.05**	34.64	36
17	Low Stage Discharge to Interstage 5672 tot -2836 leg	5672.00	Superheated Vapor	3	150 PSI	0 to 50 F	2	47.27	50	50	**1.03**	**0.25**	13.34	14
18	Interstage to High Stage Suction	8,249	Superheated Vapor	2	150 PSI	0 to 50 F	1	137.48	50	50	**1.03**	**0.25**	22.74	24
19	Economizer Outlet to Interstage	2,576	Superheated Vapor	1	150 PSI	-20 to 20 F	1	42.93	50	50	**1.03**	**0.25**	12.71	12
20	Liquid side of hot bypass	825	Superheated Vapor	1	350 PSI	200 F	1	13.75	200	200	**3.37**	**2**	3.18	4
21	Gas side of hot bypass	825	80% Liquid/ 20% Vapor	1	150 PSI	0 to -65 F	1	13.75		-55	**0.11**	**0.25**	12.49	12
22	Pumpdown line	100	Superheated Vapor	1			1	1.67	200	100	**72.38**	**0.5**	0.73	1
23	Cooling water (13500 gpm), will need drains, vents, freeze considerations	112522.5	Water	2	100psig	100F	2	937.69			62.4	**0.35**	19.55	20
24	Cooling water Main(13500 gpm), will need drains, vents, freeze considerations	112522.5	Water	1	100psig	100F	1	1875.38			62.4	**0.35**	27.65	28

Per Sietech Process Diagram																			
Option 2	**lb/min**	**Quality**			**Flow Divis**	**Flow per**	**Psizing**	**T**	Density	**Assumed q**	**Diam**	**Diam**	Quantity				Diam Circ 3,in	Diam Circ 3,in	
						pps	psia	F	lbm/ft3	psid	inches	inches	Circ 1	Circ 2		Circ 3	0.816497		
High Stage Discharge to Condensor	1,490	erheated V	350 PSI	200 F	1	24.83	200	200	**3.15**	**0.25**	7.30	8	3	3		2			
No Crossever																			
Condensor to Outlet Header	1,490	turated Liq	350 PSI	100 F	1	24.83	300	100	**61.50**	**0.25**	3.47	4	3	3		2			
Condensor Outlet header to HP	4,470	turated Liq	350 PSI	100 F	1	74.50	300	100	**61.50**	**0.25**	6.02	6	1	1		1	4.912782	6	
HP Receiver to Economizer	4,470	turated Liq	350 PSI	100 F	1	74.50	300	100	**61.50**	**0.25**	6.02	6	1	1		1	4.912782	6	
Economizer to Control Valve	2,810	bcooled liq	350 PSI	-20 to 20 F	1	46.83	300	0	**76.76**	**0.25**	4.51	6	1	1		1	3.685208	4	
Control Valve to Flash Cooler (size for	2,810	iquid/ 20%	150 PSI	0 to -65 F	5	9.37		-55	**0.32**	**0.075**	10.70	12	1	1		1	8.73473	10	
Flash Cooler to Pumps	2,990	turated Liq	150 PSI	0 to -65 F	1	49.83		-55	**82.53**	**0.25**	4.57	6	1	1		1	3.733116	4	GPM
Pumps to Heat Exchanger	2,990	bcooled Liq	150 PSI	0 to -65 F	1	49.83		-55	**82.53**	**0.25**	4.57	6	1	1		1	3.733116	4	270.9809
Heat Exchanger to Flash Cooler (size for vapor only)	2,990	iquid/ 70%	150 PSI	0 to -65 F	1.43	34.88		-55	**0.32**	**0.075**	20.64	20	1	1		1	16.85644	18	
Flash Cooler to Low Stage Suction,	2820.00	turated Vap	150 PSI	0 to -65 F	1	47.00		-55	**0.32**	**0.05**	26.52	26	1	1		1	21.65353	22	
Flash Cooler to Low Stage Suction, Per compressor leg	940.00	turated Vap	150 PSI	0 to -65 F	1	15.67		-55	**0.32**	**0.05**	15.31	36	3	3		2			
Economizer Outlet to Interstage	1,660	erheated V	150 PSI	-20 to 20 F	1	27.67	50	50	**0.97**	**0.25**	10.34	10	1	1		1	8.442636	8	
Liquid side of hot bypass	825	erheated V	350 PSI	200 F	1	13.75	200	200	**3.15**	**2**	3.23	4	1	1		1	2.637018	4	
Gas side of hot bypass	825	iquid/ 20%	150 PSI	0 to -65 F	1	13.75		-55	**0.32**	**0.25**	9.59	12	1	1		1	7.832288	8	
Pumpdown line	100	erheated Vapor			1	1.67	300	100	**61.50**	**0.5**	0.76	1	1	1		1	0.617897	1	
Cooling water to condenser, will need drains, vents, freeze considerations	41675	Water	100psig	100F	1	694.58			62.4	**0.35**	16.83	**18**	3	3		2		10	
Cooling water Main(13000 gpm), will need drains, vents, freeze	108355	Water	100psig	100F	1	#####			62.4	**0.35**	27.13	**28**	1	1		1	22.15555	14	

Per 2/19/2007 Sietech Process Diagram												
Option 3	**lb/min**	**Quality**			**Flow Divisor**	**Flow per line**	**Psizing**	**T**	Density	**Assumed q**	**Diam**	**Diam**
						pps	psia	F	lbm/ft3	psid	inches	inches
High Stage Discharge to	2,085	Superheated Vapor	350 PSI	200 F	1	34.75	200	200	**3.15**	**0.25**	8.63	10
No Crossever												
Condensor to Outlet Header	2,085	Saturated Liquid	350 PSI	100 F	1	34.75	300	100	**61.50**	**0.25**	4.11	4
Condensor Outlet header to Economizer	2,085	Saturated Liquid	350 PSI	100 F	1	34.75	300	100	**61.50**	**0.25**	4.11	4
Economizer to Control Valve	1,310	Subcooled liquid	350 PSI	-20 to 20 F	1	21.83	300	0	**76.76**	**0.25**	3.08	4
Control Valve to Brine Cooler (size for vapor only)	1,310	80% Liquid/ 20% Vapo	150 PSI	0 to -65 F	5	4.37		-55	**0.32**	**0.075**	7.30	8
Brine Cooler to Pumps (D-12)	88822.81	Liquid	150 PSI	0 to -65 F	1	1480.38		-55	**50.64**	**0.35**	25.88	26
Pumps to Heat Exchanger (D-	88822.81	Liquid	150 PSI	0 to -65 F	1	1480.38		-55	**50.64**	**0.35**	25.88	26
Heat Exchanger to Flash Cooler (D-12)	88822.81	Liquid	150 PSI	0 to -65 F	1	1480.38		-55	**50.64**	**0.35**	25.88	26
Flash Cooler to Low Stage	2820.00	Saturated Vapor	150 PSI	0 to -65 F	1	47.00		-55	**0.32**	**0.05**	26.52	26
Flash Cooler to Low Stage Suction, Per compressor leg	1310.00	Saturated Vapor	150 PSI	0 to -65 F	1	21.83		-55	**0.32**	**0.05**	18.08	18
Economizer Outlet to Interstage	775	Superheated Vapor	150 PSI	-20 to 20 F	1	12.92	50	50	**0.97**	**0.25**	7.07	8
Liquid side of hot bypass	250	Superheated Vapor	350 PSI	200 F	1	4.17	200	200	**3.15**	**2**	1.78	2
Gas side of hot bypass	250	80% Liquid/ 20% Vapo	150 PSI	0 to -65 F	1	4.17		-55	**0.32**	**0.25**	5.28	6
Pumpdown line	100	Superheated Vapor			1	1.67	300	100	**61.50**	**0.5**	0.76	1
Cooling water to condenser, will need drains, vents, freeze	29172.5	Water	100psig	100F	1	486.21			62.4	**0.5**	12.88	14
Cooling water Main(13500 gpm), will need drains, vents, freeze considerations	175035	Water	100psig	100F	1	2917.25			62.4	**0.35**	34.49	36
Expansion												
rho @ -50F, lbm/ft3	50.5											
rho @ 100F	46.8											
delta rho	1.07906											

	Scale Length	134a	Scale Diam							
		Length		Diameter	Diameter	Quantity				
		ft		ft	ft					
Flash Cooler /Brine Cooler	0	30	0.5625		**8**	1				
Suction Header	24.4	**30**	0.4375	4.2	4.5	1				
Receiver		30	0.625	6	6	1				
Condenser		6.5	0.4375	4.2	4.25	2				
Hi P Economizer (to mid-stage) (equivalent of 5 current)	6.94737	7	0.41926	4.02492	5.5	1				
		GPM		Rise, psid						
Liquid Pump		500		90						
		Option 2, Circs 1 and 2	Diam. Scale Factor	Option 2, Circs 1 and 2	Option 2, Circs 1 and 2	Option 2, Circ 3	Option 2, Circ 3	Option 2, Circ 3		
		Length	V=constai	Diameter	Quantity	Length	Diameter	Quantity		
		ft		ft		ft	ft			
Flash Cooler /Brine Cooler		8	0.40485	6	2	8	5	1		
Suction Header		8	0.42803	2.5	2	8	2	1		
Receiver		Sean	Sean	Sean	Sean	Sean	Sean	Sean		
Condenser		6.5	0.5	2.5	6	6.5	2.5	2		
Hi P Economizer (to mid-stage) (equivalent of 5 current)		7	0.57735	3.25	2	7	3.25	1		
		GPM		Rise, psid						
Liquid Pump		300		90	2			1		
		Option 3	Diam Scale factor	Option 3	Option 4					
		Length	V=constai	Diameter	Quantity					
		ft		ft						
Flash Cooler /Brine Cooler		8		4	6	Same as Condenser but lower density (pressure)				
Suction Header		None								
Receiver		None (maybe some expansion provision, but unlikely))								
Condenser		6.5	1.1547	3	6					
Hi P Economizer (to mid-stage) (equivalent of 5 current)		7	1.1547	3.25	6					
		GPM		Rise, psid						
Liquid Pump (D12)		13119		75						
		Lbs R-12		Length, ft		Diameter, ft				
Existing Storage Tank		60000		22		6				

Notes:

1. The immediatele available information was very limited for components sizing so nominal sizes were deduced from existing equipment to serve as place holders until such time more appropriate information is obtained. The sketches in the Operations manual was used extensively and it was assumed thant the various sketches were roughly in proportion. The following is simply a rational for picking initial values until more useful information becomes available. Note that much of this equipment is in common with all options so it is more important to be consistent between configurations.

2. Reciever: From the operating manual there was information on the original Freon 12 refrigerant storage facility was 6ft in diameter and 22 ft long. It was assumed that this could all of the liquid within the low pressure side of the refrigeration system and is now a bit too small for the current configuration. Furhtermore, the new configuration (assuming the HX is unchanged) will have greater liquid need. The high pressure reeiver has to nw perform nominally the same function so increased length from 22 ft to 30ft and use this for now. It is basically a pressure vessel. For Option 2 use same as Option 1 until we get info from Sean.

3. Flash Cooler: (Action get flash cooler volume info from GRC). Assuming a (as yet undefined) new flash cooler; it will not need very much liquid volume but still will a comparable gas volume and vapor phase pipe connections. Simply assume in coordination with Sean, for now, that the new flash cooler is 8ft in diameter. The flash cooler will have some internal baffles for flow separation and dampers for control. It and the suction header will have many penetrations.

4. Suction Header: A similar unit will be needed for comparable flow, so scale from Ops Manual. The suction header may have some internal gas separation structure. It will have many penetrations.

5. Condenser: Assume a new condenser. From Fig 2 of Ops manual deduce that gas inlets ifor the smaller condensers is about 4 inch (consistent with line sizinge xercise). The the condenser would be about 18 inch in diamter and the active length would be about 6.5ft long. Per Sean the equivalnet of 10 condensers is needed in 2 modules. Keep length and simply sacle diameter by square root of 5. This also roughly scales. It will be basically a gas to liquid shell and tube heat exchanger.

5. Economizer (condeser outlet): Essentially same flow as 1 (of 2) condensers with high potential heat transfer coefficients on both sides. Use condenser values.

7. Pump: Sperra intersection point was at 320gpm R-134a with 45 psia rise. FrigidCoil design basis was 400gpm. At 400gpm the load curve would intersect a 12 impeller at 75 psid rise. Given hx orifice issues and to be conservative pick about 500gpm and 90psid rise which would yield about a 35hp motor.

General Process Comparison (precedes Sietech Process Analysis)

Large common elements include the tunnel heat exchanger and the piping to and from the heat exchanger. A relative process comparison of the supply side and the suction side of the tunnel heat exchanger is provided in the table provided below.

	A	B	C	D	E	F	G	H	I
2			HX Design Basis	HX Design Basis but 60% Exit quality	Lo Temp R134a Design	Assumed Current System Design Basis	R507 System Design Basis - 65F	R507 System Design Basis - 55F	D12 System Design Basis - 55F
3									
4	Coolant to HX		"R134a"	"R134a"	"R134a"	"R134a"	"R507A"	"R507A"	D12
5	Heat Load @ -65F	tons/hr	1665.6	1665.6	1600	1600	1600	1600	1600
6		MW	5.858	5.858	5.627	5.627	5.627	5.627	5.627
7		Btu/sec	5552	5552	5333	5333	5333	5333	5333
8	Coolant Temperature	F	-18	-18	-65	-55	-65	-55	-55
9	Liquid Density	lbm/ft3	86.26	86.26	90.97	90.00	83.58	82.51	50.64
10	Sat. Pressure	psia	13.59	13.59	3.39	4.70	10.28	13.60	
11	Assumed Quality		0.756	0.6	0.6	0.6	0.6	0.6	
12	Computed Liquid Flow	pps	78.3	98.6	88.2	89.5	102.6	104.4	1480.4
13		gpm	407.2	513.1	435.0	446.1	550.6	567.7	13118.0
14	Suction Flow								
15	Vapor Density	lbm/ft3	0.305	0.305	0.083	0.113	0.249	0.324	50.644
16	Mixture density (theoretical -no slip)	lbm/ft3	0.403	0.507	0.138	0.188	0.415	0.539	50.644
17	Liquid viscosity	lbm/ft-sec	0.000	0.000	0.000	0.000	0.000	0.000	0.007
18	Inlet dP factor (137 @ -65) (w^1.8)*(mu^0.2)/rho		5.701	8.642	7.283	7.411	9.673	9.916	3763.5
19	Liquid Pressure Loss Ratio		0.783	1.187	1.000	1.018	1.328	1.361	516.7
20	Implied diameter change, ratio		0.950	1.036	1.000	1.004	1.061	1.066	3.675
21	Gas Viscosity	lbm/ft-sec	6.5E-06	6.5E-06	5.9E-06	6E-06	6.6E-06	6.8E-06	
22	Rough approx Inlet dP factor (137 @ -65) (w^1.8)*(mu^0.2)/rho		584.02	703.47	2066.70	1568.32	925.24	738.60	
23	Approx Suction Pressure Loss Ratio		0.3724	0.4486	1.3178	1.0000	0.5900	0.4709	2.3997
24	Implied diameter change, ratio		0.8140	0.8462	1.0592	1.0000	0.8959	0.8548	1.2000

The Column C is a reference condition which is consistent with the Frigid Coil Design Basis of the tunnel heat exchanger. That condition resulted in a relatively high quality of the two phase flow leaving the heat exchanger. The next column, D, is the same configuration adjusted for a lower quality, 0.6. The Column F is the assumed piping system design basis (-55F) using an exit quality of 0.6. This is presumed to be the same as for the new R134a refrigeration system option. Column E is the similar to Column F except that the design basis was set at -65F. As can be seen in the table, -65F, is a very low temperature for Refrigerant 134a. The saturation pressure is very low and the vapor density is correspondingly low.

Column G and H compares R507A refrigerant with R134a assuming -65F and -55F temperature levels, respectively. Column I is an evaluation of a secondary coolant scheme using Therminol D-12 as the coolant.

Heat Exchanger

The existing tube and plate was reviewed using generalized heat transfer data. More precise evaluation must be done by the heat exchanger vendor who will able to use proprietary data and algorithms in estimating performance.

In the mode of direct evaporation of refrigerant, the new 134a case should be comparable to the existing 134a configuration. The minimum coolant temperature will be limited to -55F or higher. Thus, at this level of review no modification of the heat exchanger should be required (please note comments on orifices below).

Now one can see from the table that R134a and R507A are quite similar fluids. Considering the exit states (at -55F and 0.6 quality) given in table within Columns F and H, the 507A flow is a little higher 104.4pps versus 89,5pps, but this is offset by 507 having a higher theoretical (no-slip) suction density, i.e.; 0.539 lbm/ft3 as compared to 0.188lbm/ft3. Thus, the coolant (boiling refrigerant) flow performance should be acceptable for either refrigerant.

A simplified calculation of nominal boiling heat transfer coefficient was made (Calculation 5) and it was found that the thermal conductance due to boiling of either fluid will be much greater than the tunnel convective conductance so overall thermal conductance will not be materially changed. Thus the thermal performance (that tunnel cooling and heat exchanger thermal effectiveness) should stay the same with 507A and has occurred for 134A. In this analysis, it was found that the flow is likely to be in the wavy flow regime.

In summary, the heat exchanger should not require any change for either 134A or 507A systems for comparable performance expectations.

An analysis, Calculation 3 (see calculation file for additional information), was made with flowing D-12 as a secondary coolant using the same design condition as the heat exchanger design point. The D-12 offers only sensible cooling so the flow has to be much higher. In order to accommodate the high flow, the heat exchanger has to be significantly reconfigured. The external manifolds have to be removed and the coolant flow has to be changed to a 4-pass cross-counter-flow arrangement. The flow orifices have to be completely removed. This coolant pressure loss through the heat exchanger will be in the range of 17 to 20 psid assuming -18F coolant. With -55F coolant the thermal performance will decrease a bit and the pressure loss will increase. This can be estimated. As a 4 pass counter-flow heat exchanger the temperature distribution of the air leaving the heat exchanger will approach the uniform distribution of a pure counter-flow heat exchanger.

In summary, the existing heat exchanger can be adapted to D-12 flow. Additional design work is required to resolve details. Only the matrix stays the same. The external liquid manifolds and piping have to be changed and the flow distribution orifices must be removed. The volumetric coolant flow and the coolant pressure drop will increase so the pump will be much different.

Heat Exchanger Flow Distribution Orifices

There is some concern that the existing flow orifices are too restrictive and change should be considered particularly at very low boiling temperatures and low exit flow quality. On a

comparison basis, however, there appears to be no reason to change orifices when switching from 134A to 507A. The orifices have to be removed for D-12.

Liquid Supply Lines

Assuming that the flowing pressure loss is proportional to Flow^$^{1.8}$*Viscosity^$^{0.2}$/Density (which is a fairly good approximation for friction dominated losses), then one can compute this factor for various cases to estimate expected changed in flow losses and/or line sizes. On the liquid side the factor is given by Line 18 in the table. Line 19 is ratio of the factor to a 134a baseline. Basically, one can see that 507A will have a relatively small effect on liquid line sizing. For equal pressure loss, the implied diameter increase is the ratio to 1/4.8 power which is provided by Line 20. From Line 20 the implied required line size change is small. Thus, one would expect to leave the liquid line the same and increase pump rise a bit (the pump pressure rise requirement would be dependent on postulated changes to flow distribution orifices).

The conclusion on regarding liquid lines would extend to all liquid refrigerant lines including sub-manifolds, etc.

The Therminol D -12 options (or any secondary coolant loop option) results in a large increase in liquid flow rate. Using the same rules, one would expect that the Therminol 12 lines will be 4 times larger (Line 20, Column I in the Table) than the liquid refrigerant lines. In more detailed analysis they will some degree of trade-off between line size and pump rise.

Return Lines

A similar type of comparison can be made on the low pressure side lines. It was assumed that the theoretical (no slip) mixture density would be suitable for comparison purposes. From Line 24 of the table, it can be seen that the diameter factor is less than one unless the 134A is at very low temperature. The two-phase flow return lines (and by implication the heat changer's boiling refrigerant pressure loss) will be usable for either 134A or 507A replacement options.

The Therminol D-12 return should be the same size as the supply as there is no significant change in density with the secondary coolant. One might very roughly expect that the D-12 supply and return line will be about 20% bigger in diameter that the exisitng 134A return line from the heat exchanger.

Line Lengths

The line lengths and sub-manifolding will have to be determined from plant layout arrangements. Routing should follow good practices, and the layout should be reviewed to note any changes that would result in significant pressure loss increases. For the lines passing two-phase flow, care must be taken to keep losses low and to following good practices for handling 2 phase flow. Of particular importance is control of slip and avoidance of separation of the two phases. Such analysis is a detailed design task.

Secondary Coolant heat Exchanger

The preliminary analysis of the heat exchanger with it flowing D-12 exceeds required performance by enough, that predicted performance may be sufficiently good enough to support the terminal temperature difference needed for selecting a coolant to refrigerant heat exchanger without a reduction in refrigerant temperature set-point (see Calculation 3).

Conclusion

Switching to 507A from 134A will have minimal impact on process piping and pipe flow elements. The exchanger and associated piping should be usable. The pump capacity should be increased for both refrigerants and the flow balancing orifice specification should be review for both refrigerants consistent with orifice flashing analysis and with the resizing of the pump.

The heat exchanger matrix should be adequate for the D-12 option. All supply and return piping and heat exchanger headers would have to be redone. The Thermin0l D-12 will require a much higher volumetric flow rate pump and one with a higher rise.

		R134A																		
			Heat Exchanger Flow								Flash Cooler Liquid Flash Flow				Economizer Flow					
Tons of Refrigeration (TR)	BTUh	BTU/lb	lbs/hr	lbs/min	Liquid Density (lbs / ft2)	Liquid Flow Rate (GPM)	Recirc Rate	Total HX Flow (lbs/min)	Total HX Flow (GPM)	Heat Capacity (btu/lb f)	Delta T	Btu/Lb	Load	Flow (lbs/min)	Delta T	Btu/Lb	Load	Flow (lb/min)	Suction Flow (lb/min)	Discharge Flow (lb/min)
600	7,200,000	92.8	77,586	1293.1	75.1	128.7	1.4	1810	180.2	0.341	55	74.045	1,455,129	328	85	63.815	2,818,448	736	1,621	2357
1200	14,400,000	92.8	155,172	2586.2	75.1	257.5	1.4	3621	360.4	0.341	55	74.045	2,910,259	655	85	63.815	5,636,896	1,472	3,241	4713
1600	19,200,000	92.8	206,897	3448.3	75.1	343.3	1.4	4828	480.6	0.341	55	74.045	3,880,345	873	85	63.815	7,515,862	1,963	4,322	6285
2100	25,200,000	92.8	271,552	4525.9	75.1	450.5	1.4	6336	630.8	0.341	55	74.045	5,092,953	1,146	85	63.815	9,864,569	2,576	5,672	8249

		R507																		
			Heat Exchanger Flow								Flash Cooler Liquid Flash Flow				Economizer Flow					
Tons of Refrigeration (TR)	BTUh	BTU/lb	lbs/hr	lbs/min	Liquid Density (lbs / ft2)	Liquid Flow Rate (GPM)	Recirc Rate	Total HX Flow (lbs/min)	Total HX Flow (GPM)	Heat Capacity (btu/lb f)	Delta T	Btu/Lb	Load	Flow (lbs/min)	Delta T	Btu/Lb	Load	Flow (lb/min)	Suction Flow (lb/min)	Discharge Flow (lb/min)
600	7,200,000	84.4	85,308	1421.8	65.4	162.7	1.4	1991	227.8	0.369	55	64.105	1,731,327	450	85	53.035	3,522,783	1,107	1,872	2979
1200	14,400,000	84.4	170,616	2843.6	65.4	325.4	1.4	3981	455.6	0.369	55	64.105	3,462,654	900	85	53.035	7,045,566	2,214	3,744	5958
1600	19,200,000	84.4	227,488	3791.5	65.4	433.9	1.4	5308	607.5	0.369	55	64.105	4,616,872	1,200	85	53.035	9,394,088	2,952	4,992	7944
2100	25,200,000	84.4	298,578	4976.3	65.4	569.5	1.4	6967	797.3	0.369	55	64.105	6,059,645	1,575	85	53.035	12,329,740	3,875	6,552	10426

Current System (No economizer)

		R134A																		
			Heat Exchanger Flow								Flash Cooler Liquid Flash Flow									
Tons of Refrigeration (TR)	BTUh	BTU/lb	lbs/hr	lbs/min	Liquid Density (lbs / ft2)	Liquid Flow Rate (GPM)	Recirc Rate	Total HX Flow (lbs/min)	Total HX Flow (GPM)	Heat Capacity (btu/lb f)	Delta T	Btu/Lb	Load	Flow (lbs/min)					Suction Flow (lb/min)	Discharge Flow (lb/min)
600	7,200,000	92.8	77,586	1293.1	75.1	128.7	1.4	1810	180.2	0.341	125	50.175	3,307,112	1,099					2,392	2392
1200	14,400,000	92.8	155,172	2586.2	75.1	257.5	1.4	3621	360.4	0.341	125	50.175	6,614,224	2,197					4,783	4783
1600	19,200,000	92.8	206,897	3448.3	75.1	343.3	1.4	4828	480.6	0.341	125	50.175	8,818,966	2,929					6,378	6378
2100	25,200,000	92.8	271,552	4525.9	75.1	450.5	1.4	6336	630.8	0.341	125	50.175	11,574,892	3,845					8,371	8371

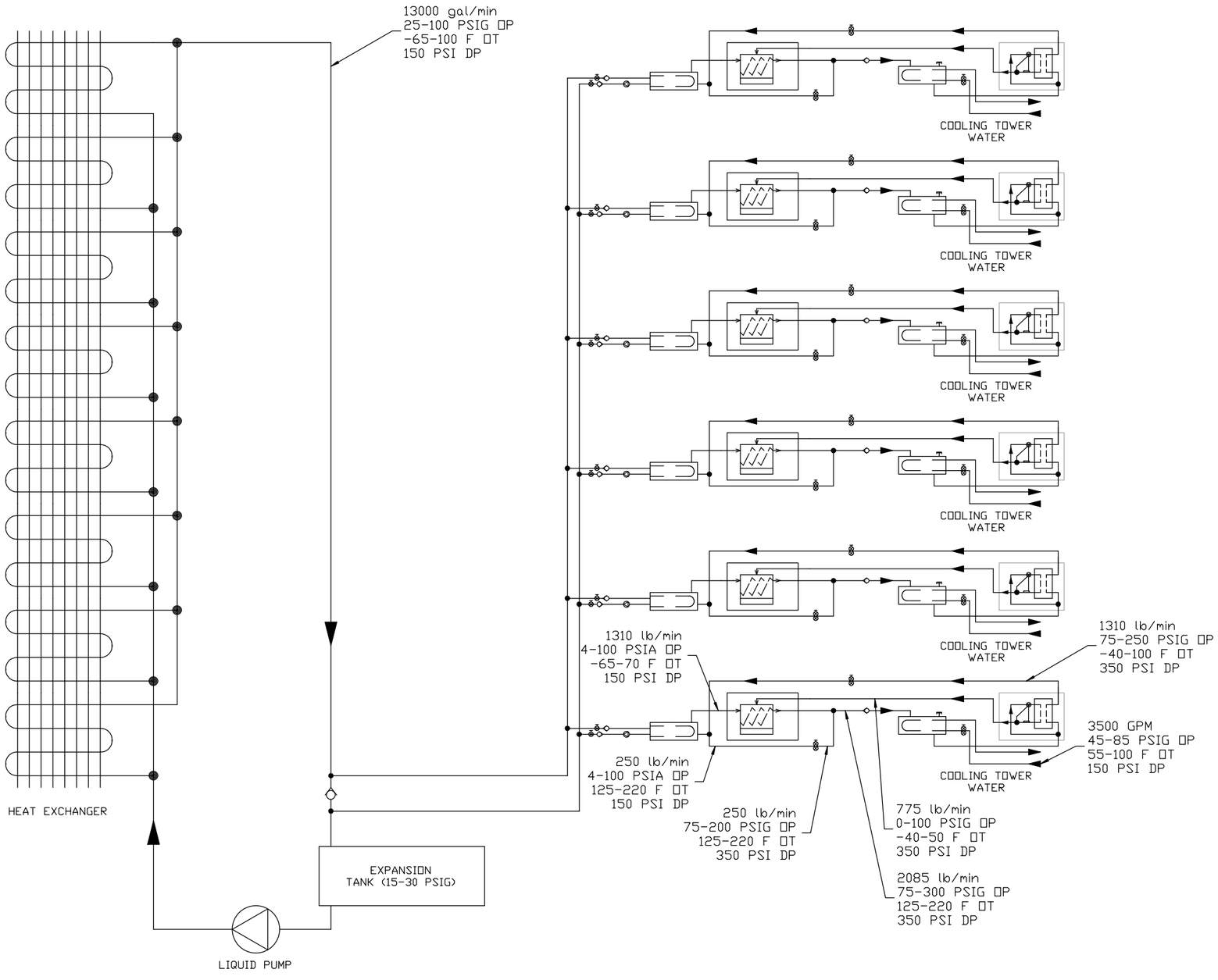

SieTech
Systems Integration and Engineering Technologies

SECONDARY COOLING PLANT PROCESS - (Option 3)

ENGINEER	DRAWN BY	DRAWING NO.
SPR		IRT-5
SCALE	DATE 02/19/07	

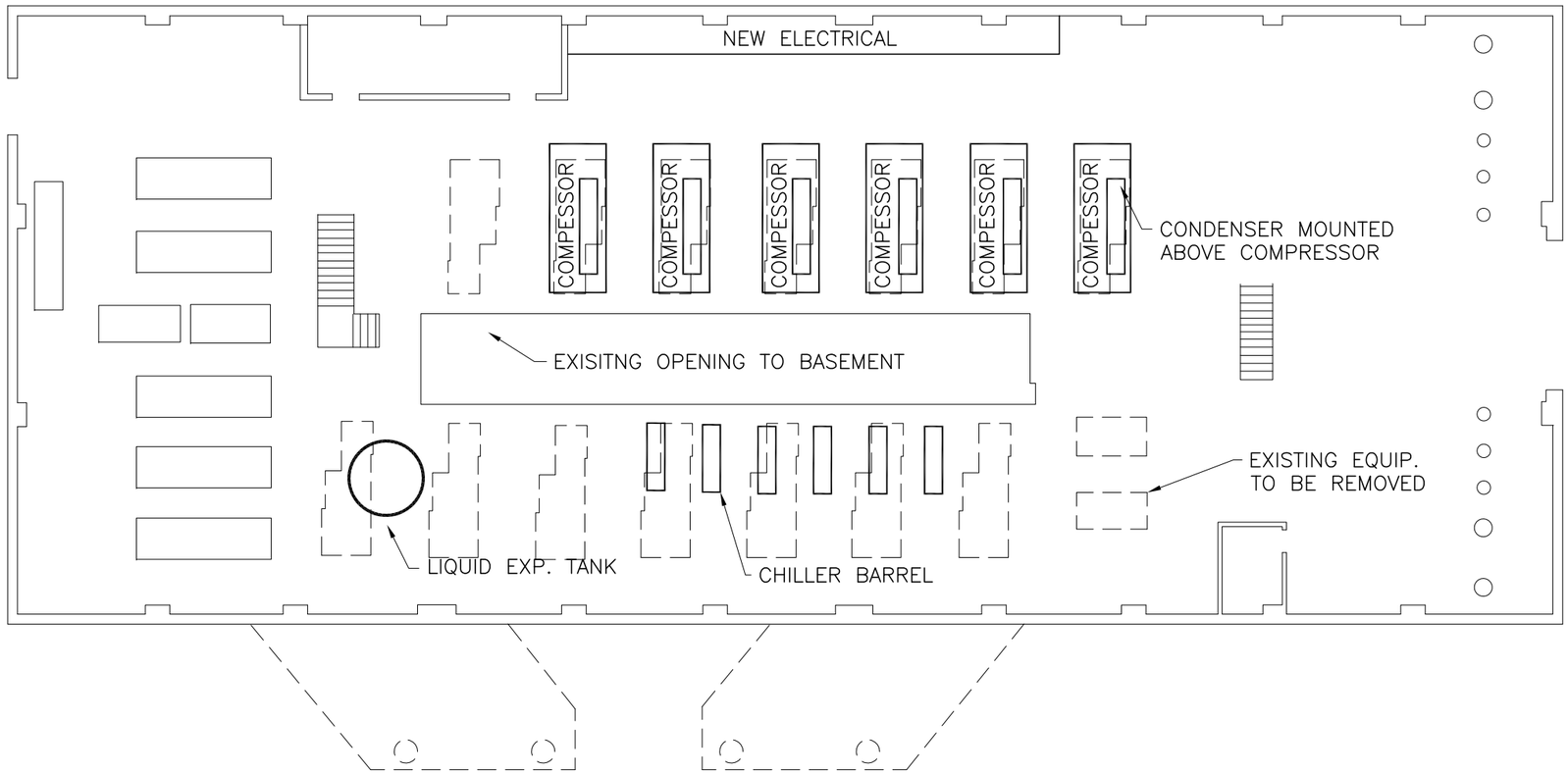

EXISTING BUILDING
FLOOR PLAN OPTION 3

1/16" = 1'-0"

Revision	Date

ASE
AERO SYSTEMS ENGINEERING

NASA GLENN RESEARCH CENTER
REPLACEMENT OF REFRIGERATION
SYTEM FOR THE IRT

Collaborative Design, Ltd.
Architects
2727 Tuller Parkway Suite 200
Dublin, OH 43017
Ph 614.798.5115 / Fax 614.798.5105

© 2007, Collaborative Design, Ltd.

Project Number
06074

Date
03-9-07

Scale
AS NOTED

File Name
AS-Leg 102901 23842

Drawing Description

OPTION 3
EXIST BLDG
FLOOR
PLAN

A9

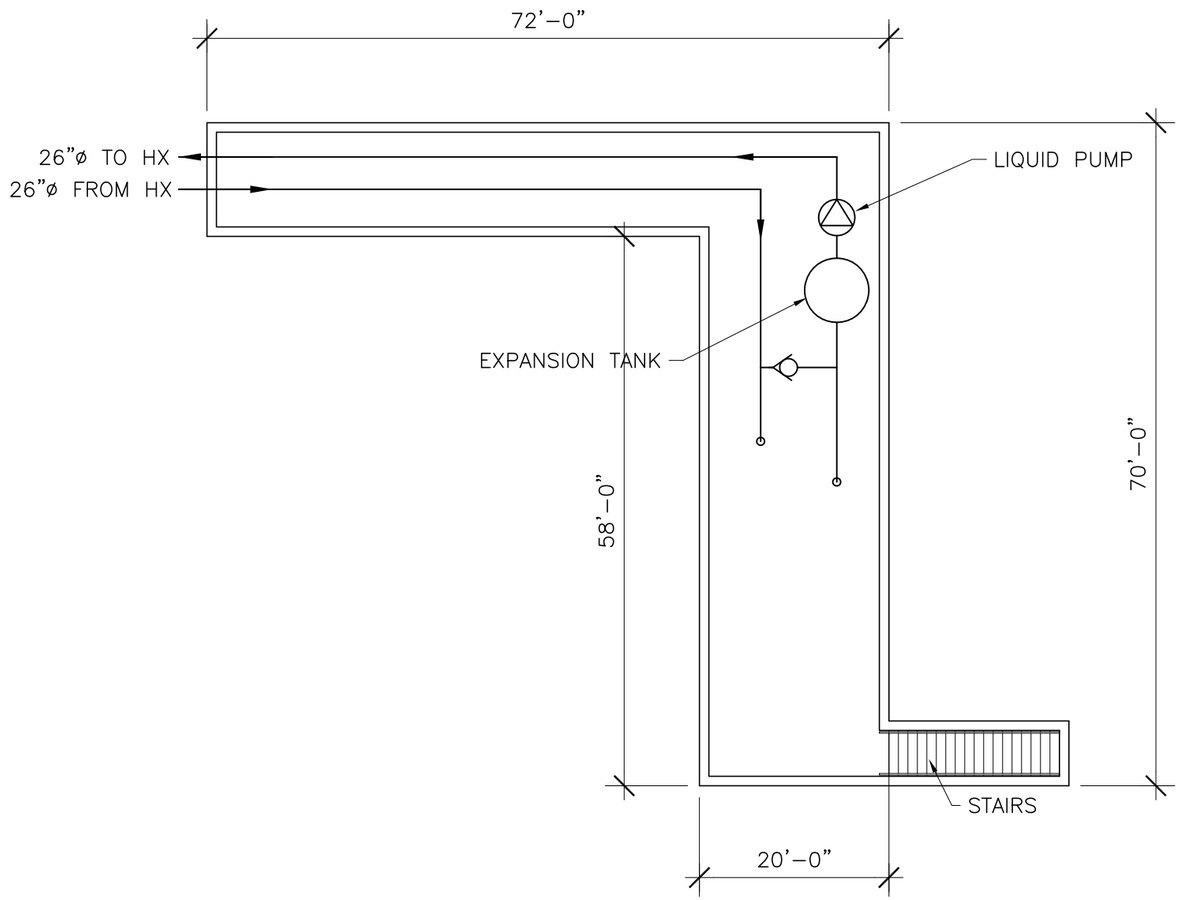

NEW BUILDING (BASEMENT)
PIPING TUNNEL PLAN OPTION 3

1/16" = 1'–0"

Revision	Date

AERO SYSTEMS ENGINEERING

NASA GLENN RESEARCH CENTER
REPLACEMENT OF REFRIGERATION
SYTEM FOR THE IRT

Collaborative Design, Ltd.
Architects
2727 Tuller Parkway Suite 200
Dublin, Ohio 43017
Tel 614.798.5110 Fax 614.798.5105

©2007, Collaborative Design, Ltd.

Project Number
06074

Date
03–9–07

Scale
AS NOTED

File Name
A2-Lvlwg 102901 23842

Drawing Description

NEW BLDG.
OPTION 3
BASEMENT
PLAN

A8

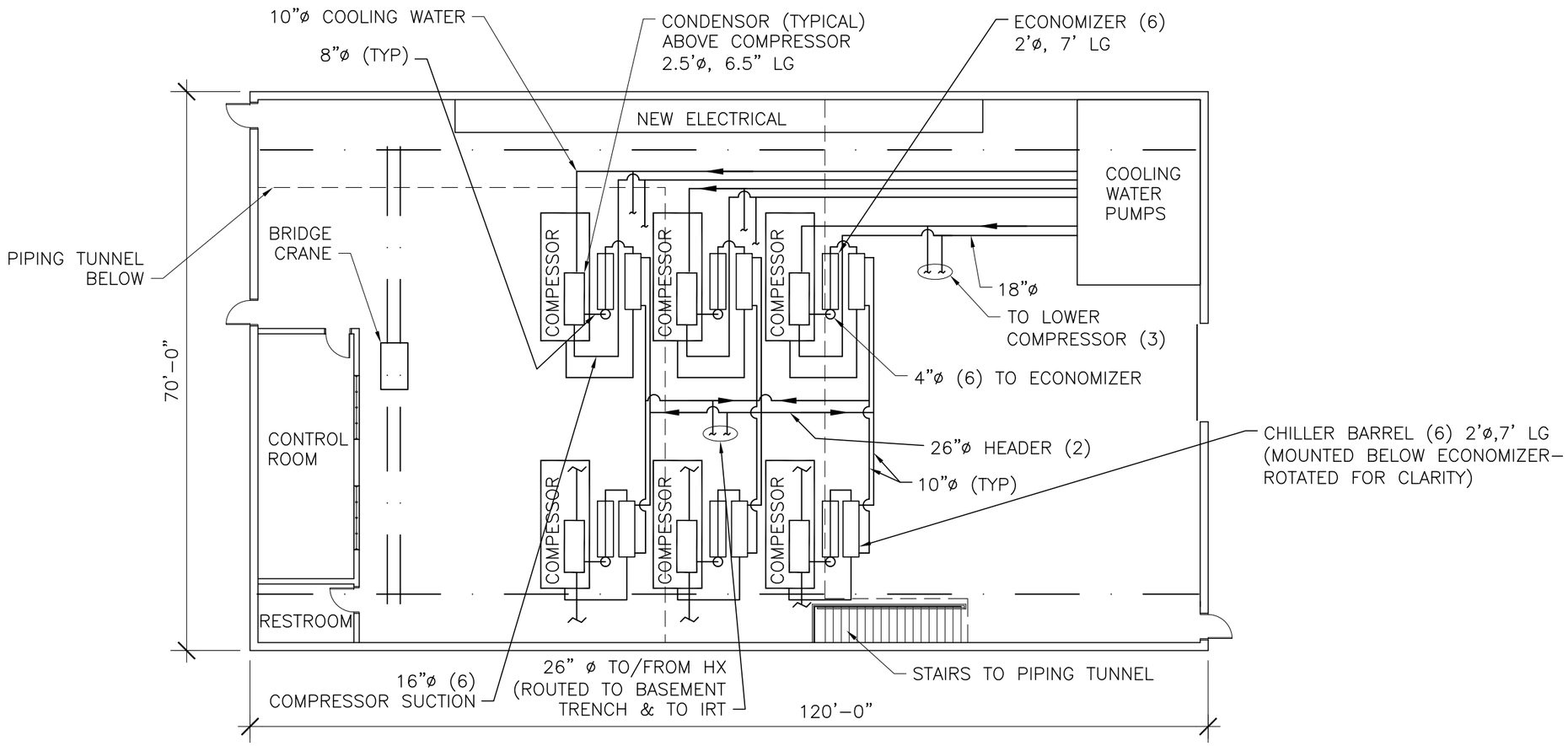

NEW BUILDING
FLOOR PLAN OPTION 3

1/16" = 1'-0"

Revision	Date

ASE
AERO SYSTEMS ENGINEERING

NASA GLENN RESEARCH CENTER
REPLACEMENT OF REFRIGERATION
SYTEM FOR THE IRT

Collaborative Design, Ltd.
Architects
2727 Tuller Parkway Suite 200
Dublin, Ohio 43017
Tel 614.798.5110 Fax 614.798.5105

© 2007, Collaborative Design, Ltd.

Project Number
06074

Date
03-9-07

Scale
AS NOTED

File Name
A1-1.dwg 192701 23842

Drawing Description

OPTION 3
NEW BLDG.
FLOOR
PLAN

A7

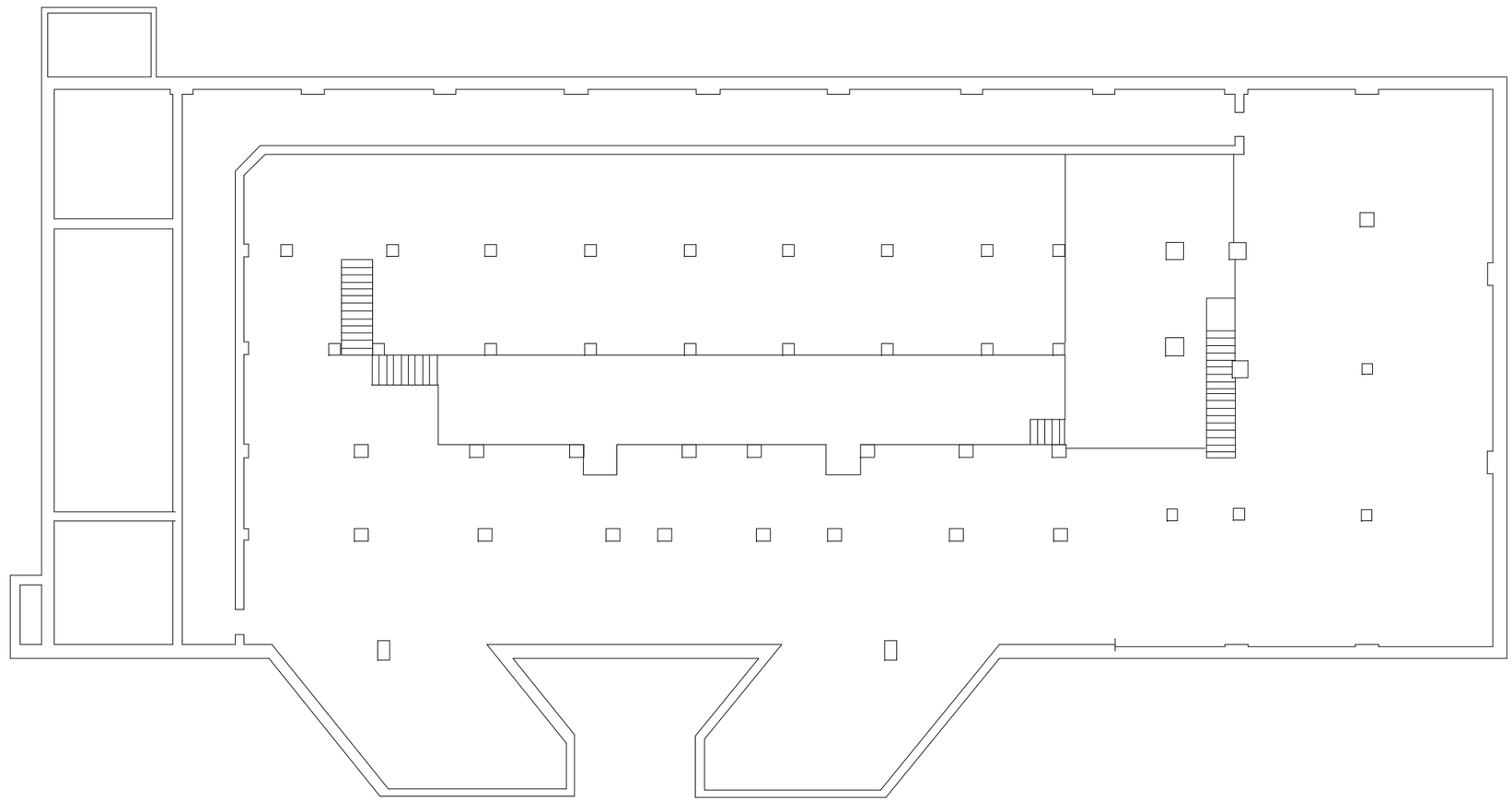

EXISTING BUILDING
BASEMENT PLAN OPTION 3

1/16" = 1'-0"

Revision	Date

AERO SYSTEMS ENGINEERING

NASA GLENN RESEARCH CENTER
REPLACEMENT OF REFRIGERATION
SYTEM FOR THE IRT

Collaborative Design, Ltd.
Architects
2727 Tuller Parkway Suite 200
Dublin, Ohio 43017
Tel 614.798.5110 Fax 614.798.5105

© 2007, Collaborative Design, Ltd.

Project Number
06074

Date
03-9-07

Scale
AS NOTED

File Name
A1-1.dwg 192191 23842

Drawing Description

OPTION 3
EXISTING BLDG
BASEMENT
PLAN

A10

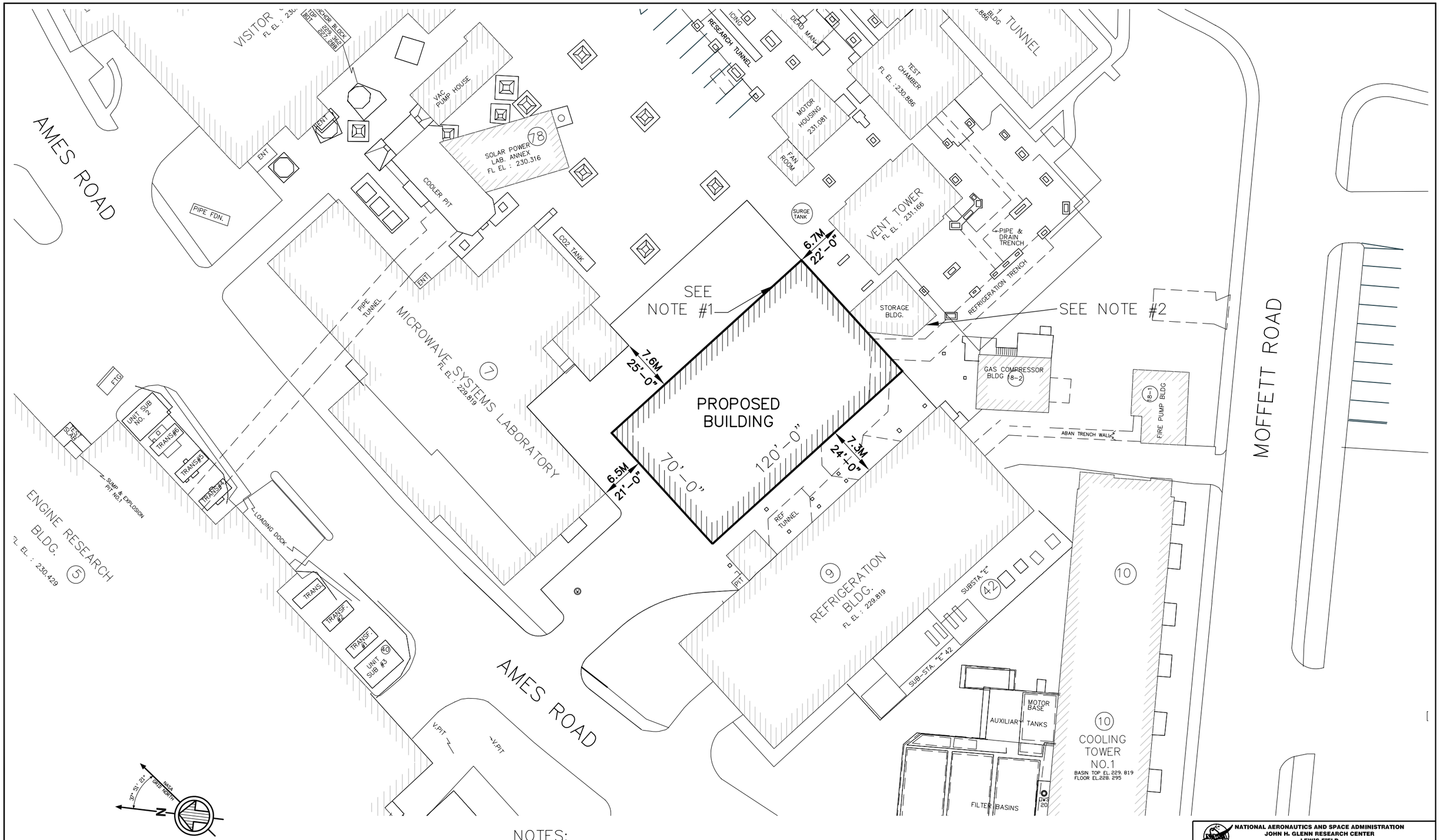

NOTES:

1. PROPOSED BUILDING FOR OPTIONS 2 & 3.
2. ASSUMES STORAGE BUILDING DEMOLITION WITH AWT DEMO PROJECT.

NATIONAL AERONAUTICS AND SPACE ADMINISTRATION
JOHN H. GLENN RESEARCH CENTER
LEWIS FIELD
CLEVELAND, OHIO

FIGURE CO1
Proposed Site Plan

UNITS: METRIC	SOFTWARE: AUTOCAD 2006	URS
SCALE: 1:500	OFFICIAL DATE: 03/07/2007	

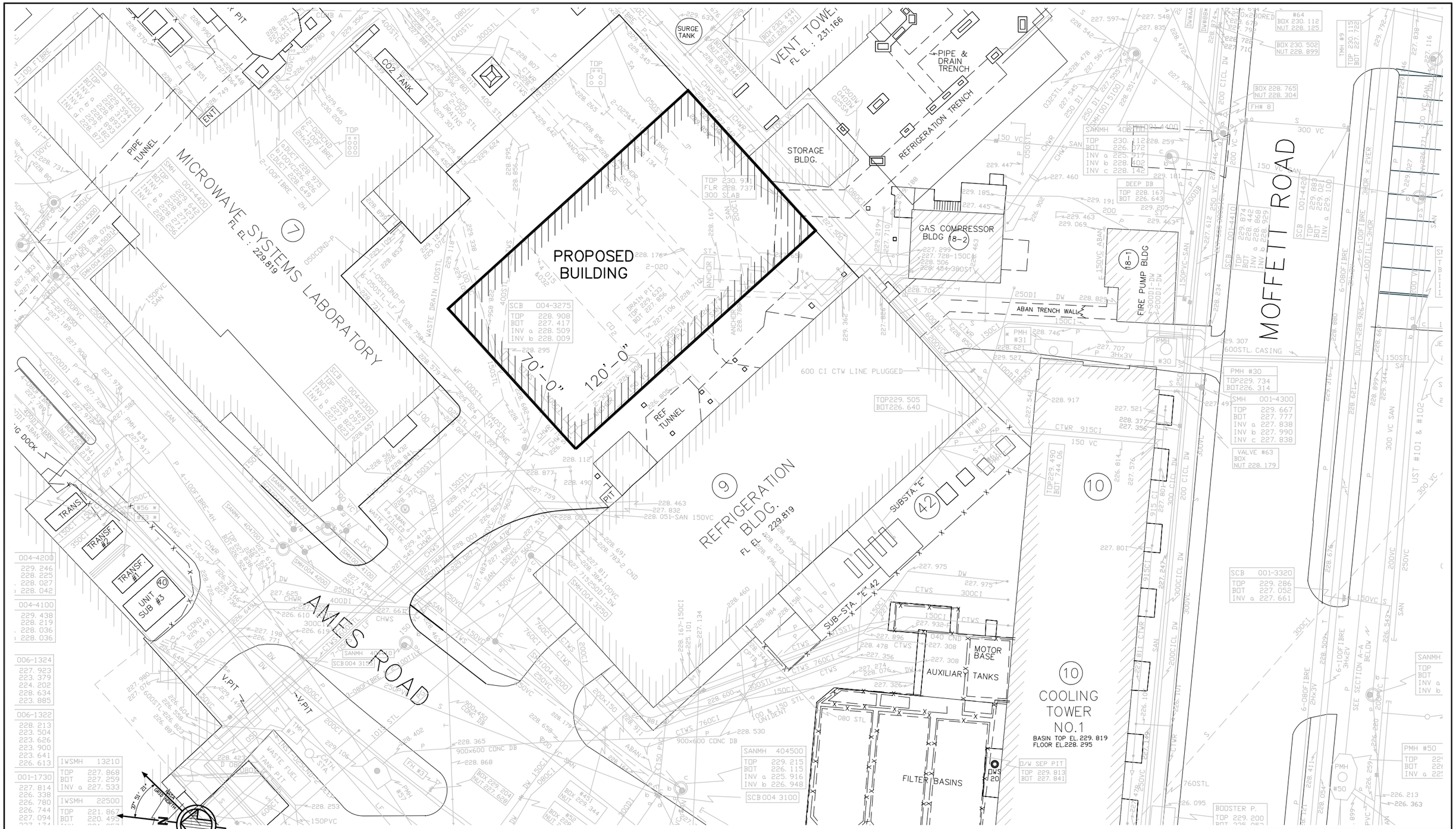

NOTES:

1. PROPOSED BUILDING FOR OPTIONS 2 & 3.

0 8m 16m 24m 32m 40m

GRAPHIC SCALE 1:400

NATIONAL AERONAUTICS AND SPACE ADMINISTRATION
JOHN H. GLENN RESEARCH CENTER
LEWIS FIELD
CLEVELAND, OHIO

FIGURE CO2
Proposed Site Plan
With Existing Utilities

UNITS: METRIC	SOFTWARE: AUTOCAD 2006	URS
SCALE: 1:400	OFFICIAL DATE: 03/07/2007	

F. Site Environmental Concerns

The options being considered involve two building scenarios: use the current building (Building 9) to house the new refrigeration system or construct a new building north of Building 9. There are no site environmental issues associated with using the current building except for the possibility of asbestos that may be present and may need abatement. The environmental issue associated with the construction of a new building is the possible presence of soil contamination in the area of construction.

The results of three samples in the vicinity of Building 9 were used to determine soil handling during the demolition of the nearby Altitude Wind Tunnel. Due to the detection of a volatile organic compound, 1,1,1-trichloroethane, in one sample, an area of concern between Building 7 and Building 9 was identified. Any soil excavated from the designated area must be handled and disposed of as a listed RCRA waste. Other soil outside of this area can be used at the site or off site as a commercial or industrial fill.

During the new building construction, some soil that is excavated may fall into the designated area of concern, and if so, disposal costs must be considered. However, if additional soil samples were collected from the parts of the designated area that will be disturbed, soil disposal costs may be decreased by refining the area designated impacted by volatile organic compounds.

G. Ice Erosion

The IRT erosion issue is still being contemplated, but no specific recommended corrective actions have evolved. In the December IRT test runs an erosion situation was demonstrated. This included a post run inspection of the tunnel. Observations included a significant deposit of “snow” upstream and downstream of the heat exchanger and the erosion pattern on an accretion test specimen.

Based on the December run and conversations with IRT technical staff, the following is general understanding of a typical situation. Given sufficient wind speed and low tunnel operating temperature, there is an onset situation in which a visible “cloud” can be observed emanating uniformly from the exit face of the heat exchanger. This diminishes over a short period of time (of the order of 5 minutes). After the onset interval, there is continuous threshold level that compromises the capability of creating accretion specimens.

Noted properties were that the particles were of relatively large size (300 micron as compared to nominal 20 micron spray) and dry so that they eroded the test specimen and did not stick. It was also noted that the previous heat exchanger would have a built-up layer standing off to a significant distance at the front edge of the heat exchanger matrix. The heat exchanger matrix of the previous required sharply turning bulk flow.

The evidence remains somewhat conflicting. One possibility is that “dry ice particles” had accumulated within the heat exchanger matrix and then broke loose en masse at the critical change of condition. After onset there remained a steady rate of erosive large dry particulate.

Another possibility is that a population of “large” (of the order of 300micron) super-cooled droplets circulated around the tunnel and accumulated on the front edge of the prior heat exchanger while they were still “sticky” (i.e.; still predominantly in a super-cooled liquid state). For the current heat exchanger, perhaps a circulating inventory nucleated somewhat en masse at onset upon reaching a critical tunnel condition and then continued at finite rate after the onset event.

The deposit of “snow” observed in the post-run inspection was quite substantial relative to heat exchanger surface area and observed residual deposits on heat exchanger surface.

H. General Structural Design Criteria

General information that would apply to all three design options. It could cover general mechanical and electrical requirements too.

1. Structural loads and design criteria:
    - a. Code: Ohio Building Code
    - b. Wind: 90 MPH, Exposure B, I = 1.0
    - c. Seismic: Seismic Use Group I; S_S=0.198; S_1=0.058
    - d. Snow: 30 psf minimum flat roof snow + drift
    - e. Site Class – TBD by Geotechnical evaluation
    - f. Foundation design criteria - TBD by Geotechnical evaluation
    - g. Building lateral system – TBD; probably bracing or shear walls
    - h. Floor loads:
        - i. 300 psf minimum uniform floor loading
        - ii. 2500# lift capacity electric lift truck
        - iii. HS20 highway load at drive-in doors
        - iv. 100 psf – stairs and landings
        - v. actual equipment loads, if heavier
    - i. Overhead crane: pendant operated with powered bridge, trolley, and hoist. 15,000 # minimum lift capacity (higher if required by specific equipment maintenance requirements). Clear lift height as required by construction and maintenance requirements of specific equipment.
    - j. Structural design shall conform with any NASA standards that are more stringent than those listed above. Confirm if a higher importance factor for wind, snow, and seismic is required per NASA.

3. Summary/Conclusion

In the 2006/2007 time frame Collaborative Design, Ltd, Aero Systems Engineering, Sietech and URS performed a concept study for replacement of the 1944 vintage Refrigeration System for the Icing Research Tunnel (IRT), Building 9. The study provided three alternative refrigeration systems for placement in the existing refrigeration building as well as in a new refrigeration building. Evaluation of each system in the existing and new buildings gives trade offs for use in selecting a replacement refrigeration system for the IRT. The three alternative refrigeration systems considered in this study were:

1. Centrifugal compressors with R134 refrigerant in exiting building
2. Screw compressors with R507 refrigerant in existing and new building
3. Screw compressors with R507 in primary loop and D12 coolant in secondary loop. Consideration given to existing and new building.

In addition to new compressors for three refrigeration systems, all equipment in the refrigeration building would be replaced. This would include flash coolers, condensers, high pressure receivers, economizers, pumps and chiller barrels. The new building for option 2 and 3 equipment would be 70 ft by 120 ft with a partial basement for routing pipes to the trench leading to the wind tunnel.

Refer to table below for construction, operation, performance & impact for the three options.

	Construction			Operation			Performance			Impact		
	Timeline	**Downtime**	**Cost**	**Maintenance**	**Reliability**	**Cost**	**Control**	**Efficiency**	**Flexibility**	**Research**	**Operation**	**Risk**
All Options	Months	Months	1000 $			Operational costs will be primarily maintainace and energy	Controls will include integration with the exisiting control system and remote operation		Will provide wider temperature range with better response	Will provide the desired temperature performance and control	Will provide the ability for automatic control of the plant	Will involve a significant change to the overall control scheme
Option 1												
Centrifugal Compressors with R134a refrigerant in existing building and with existing HX	14	14	12,420	Large volumes of refrigerant still equates to large yearly cost for leaks	Very high reliability with high costs associated with any needed repairs	$ 439,475 per year	Has the least options for control	Has the best efficency at it's design condition	Operating Range is still limited by saturation pressure	While this option is not expected to change the physics of the tunnel, the increased plant performance may effect the HX surface temperatures	Will still require operational planning as to load selection, the compressor units should not be frequently cycled	1. Disturbing the existing piping could create leaks, 2. Existing HX performance doesn't match models
Option 2												
Screw Compressors with R507 refrigerant in existing building and with existing HX	13	13	9,866	Large volumes of refrigerant still equates to large yearly cost for leaks	Good reliability with average costs associated with any needed repairs	$ 403,489 per year	Provides a wide variety of control steps and points, allowing for very optimal automatic adjustment of the performance	Has a good effiency curve throughout the operating range of the system	Operating Range is still limited by saturation pressure	This option allows individual control of each pass of the cooling coil. This enables experimentation and adjustment of the cooling process, possibly leading to reduction of the erosion issue.	Operation can be completely automatic without prescheduling. For all practical purposes, single setpoint control.	Changes in refrigerant and circuiting change the dynamic of the existing HX.
Screw Compressors with R507 refrigerant in new building and with existing HX	15	6	13,310									
Option 3												
Screw Compressors with R507. Secondary loop with D12 coolant in existing building & new HX	13	13	11,289	Small refrigerant circuits yields much lower anticipated leakage. Fluid leaks are less likely, easier to contain and easier to repair	Good reliability with average costs associated with any needed repairs	$ 405,891 per year	Provides very stable HX thermal conditions and very tight control tolerances	Operational efficency will be less on average, due to the pumping load and additional heat transfer step	Whereas options 1 & 2 utilize recirculated liquid circuits which require a large volume of refrigerant in a liquid state to operate, this places a physically defined upper bound on the operating temperature for these other options.	The new HX would allow changes to the airflow, thermodynamics, and physics of the tunnel. Warm operating conditions are availible, as would be using the fluid to heat the tunnel space.	Operation can be completely automatic without prescheduling. For all practical purposes, single setpoint control.	Change to a new HX and a single phase fluid introduce unknowns
Screw Compressors with R507. Secondary loop with D12 coolant in new building & new HX	13	6	13,743									
Notes												

Summary of IRT Mechanical Construction Cost Estimate

WP	Work Package Description, Option 1		Material/Equip (Installed)	Engineering	Total	%
1	Building Modifications & Remove Existing Equipment		$402,500	$36,000	$438,500	4.2%
2	Compressor System		$6,586,100	$155,400	$6,741,500	64.9%
3	Flash Cooler		$147,000	$31,575	$178,575	1.7%
4	Receiver		$36,000	$24,000	$60,000	0.6%
5	Condensers and Economizer		$171,000	$18,000	$189,000	1.8%
6	Piping Systems		$1,608,043	$198,000	$1,806,043	17.4%
7	Pumps		$17,150	$3,600	$20,750	0.2%
8	Controls		$350,000	$63,000	$413,000	4.0%
9	Electrical Power Supply		$500,000	$43,200	$543,200	5.2%
	Subtotal, Option 1		$9,817,793	$572,775	$10,390,568	100.0%
	Contractor Overhead:	10%	$981,779	$57,278	$1,039,057	
	Subtotal:		$10,799,572	$630,053	$11,429,625	
	Contractor Profit:	15%	$1,619,936	$94,508	$1,714,444	
	Option 1 Total (March 2007 $):		$12,419,508	$724,560	$13,144,068	

WP	Work Package Description, Option 2		Material/Equip (Installed)	Engineering	Total	%
21	Building, 70 ft x 120 ft, new		$ 3,125,000	$198,000	3,323,000	29.5%
10	Piping System		$2,215,939	$198,000	$2,413,939	21.4%
11	Compressor System		$3,704,850	$165,900	$3,870,750	34.3%
12	Flash Cooler		$237,000	$31,575	$268,575	2.4%
13	Condensers and Economizers		$277,000	$27,000	$304,000	2.7%
14	Receivers		$87,000	$24,000	$111,000	1.0%
18	Pumps		$24,900	$3,600	$28,500	0.3%
8	Controls		$350,000	$63,000	$413,000	3.7%
9	Electrical Power Supply		$500,000	$43,200	$543,200	4.8%
	Subtotal, Option 2		$10,521,689	$754,275	$11,275,964	100.0%
	Contractor Overhead:	10%	$1,052,169	$75,428	$1,127,596	
	Subtotal:		$11,573,858	$829,703	$12,403,560	
	Contractor Profit:	15%	$1,736,079	$124,455	$1,860,534	
	Option 2 Total (March 2007 $):		$13,309,937	$954,158	$14,264,095	
	Option 2 Total in Existing Building		$9,865,974	$749,228	$10,615,202	

WP	Work Package Description, Option 3		Material/Equip (Installed)	Engineering	Total	%
21	Building, 70 ft x 120 ft, new		$ 2,018,600	$198,000	2,216,600	18.5%
16	Piping System		$ 2,809,881	$301,575	3,111,456	25.9%
17	Compressor System		$3,104,850	$165,900	$3,270,750	27.3%
15	Condensers, Economizers, Exp Tank and Chiller Barrels		$485,250	$60,000	$545,250	4.5%
19	Pumps		$97,500	$5,400	102,900.0	0.9%
8	Controls		$350,000	$63,000	413,000.0	3.4%
9	Electrical Power		$500,000	$43,200	543,200.0	4.5%
20	New HX		$1,497,500	$299,500	1,797,000.0	15.0%
	Subtotal, Option 3		$10,863,581	$1,136,575	$12,000,156	100.0%
	Contractor Overhead:	10%	$1,086,358	$113,658	$1,200,016	
	Subtotal:		$11,949,939	$1,250,233	$13,200,172	
	Contractor Profit:	15%	$1,792,491	$187,535	$1,980,026	
	Option 3 Total (March 2007 $):		$13,742,430	$1,437,767	$15,180,197	
	Option 3 Total in Existing Building		$11,288,901	$1,287,297	$12,576,198	

Option 1, Centrifugal Compressors in Existing Building

Implementing this option involves replacement of essentially all refrigeration equipment in the existing building but does not require modification to the heat exchanger or piping to and from the wind tunnel. Considering availability of centrifugal compressors, three low pressure and two high pressure compressors offer good reliability, reasonable economics and redundancy for a sate of the art refrigeration system. The operation would be similar to current system and would not enhance the tunnel capabilities beyond those existing today.

Installing the new refrigeration equipment into the existing building requires facility shutdown at the start of installation. The shutdown and installation schedule is approximately 14 months and the estimated construction cost is $12.4 million.

Option 2, Screw Compressors in Existing Building

The screw compressor option is similar to option one except that three separate refrigerant systems and supply/return lines permit individual control of each of the three heat exchanger modules. The option should enhance wind tunnel temperature control and provide the desired reliability and redundancy by operating two of the three systems. New piping between the three heat exchanger modules and the refrigeration building increases the risk of manifolding/piping leaks and limits the service area at the heat exchanger connections. The two main heat exchanger modules would each have three screw compressors and the third (smaller) heat exchanger module would have two screw compressors, thus a total of eight screw compressors.

Installing the new screw compressor equipment into the existing building and modifying the heat exchanger piping requires facility shutdown at the start of installation. The shutdown and installation schedule is approximately 13 months and the estimated construction cost is $9.87 million.

Option 2, Screw Compressors in New Building

Installing the screw compressor refrigeration system in new building has a primary benefit of reduced downtime at the expense of increased overall construction cost. The shutdown and installation schedules are approximately 6 and 15 months respectively. The estimated construction cost including the new building is $13.31 million.

Option 3, Screw Compressors with Secondary Loop in Existing Building

Adding a secondary loop to the above screw compressor system (uses six compressors since all compressors connect to the same chiller barrel system that chills the D12 coolant for the heat exchanger) requires new piping between the refrigeration building and the heat exchanger. Since the orifices in the existing heat exchanger would require modification, a new heat exchanger is recommended to minimize risk and downtime.

This option requires the least amount of refrigerant and thus minimizes potential leaks and maximizes reliability. The secondary loop uses single phase flow though the heat exchanger and provides the best controllability of heat exchanger temperature.

Installing the new screw compressor equipment along with the secondary loop equipment into the existing building and modifying the heat exchanger piping requires facility shutdown at the start of installation. The shutdown and installation schedule is approximately 13 months and the estimated construction cost is $11.30 million.

Option 3, Screw Compressors with Secondary Loop in New Building

As with option two, installing the screw compressor refrigeration system equipment with secondary heat exchanger loop in a new building has a primary benefit of reduced downtime at the expense of increased overall construction cost. The shutdown and installation schedules are approximately 6 and 13 months respectively. The estimated construction cost including the new building is $13.75 million.

Recommendation

Considering the operational requirements of the IRT, the recommendation is to implement option 3. This conclusion is based on the design priorities of enhanced operational uptime, flexibility, and control. The good reliability and commercial serviceability of the screw compressors, coupled with the redundancy and simplicity of the fluid system, provide the best expected operational experience.

The fluid systems simplicity is because the secondary cooling loop only contains cooled liquid, and is not dependant on pressure/temperature relationships or saturation/vaporization conditions. The more complex refrigeration systems are isolated to the independent chiller packages, and could be treated as completely separate from each other. This leads to easier maintenance and operation with less requirements for extremely specialized skills.

Although any of options, if implemented optimally, offer similar theoretical performance, option 3 provides the most design flexibility and margin for the unknowns prevalent in the system. This option provides the most responsiveness to current operational and research issues while also providing scalability for future requirements. Additional compresses could be added for lower temperatures or more load.

The inherent thermal stability, control accuracy, and automation level of the fluid system will continue to allow for tight research tolerances with significantly reduced staffing requirements. The compressors and fluid loop would be computer controlled thereby reducing the staff requirements.

As noted above in option 3, a downtime reduction of 7 months results when adding a new building for an additional $3.4 million. Assessing this trade-off has not been visited as part of the concept study.

Appendix A

AERO SYSTEMS ENGINEERING

PROJECT: P06151 – NASA GRC – Replacement of Refrigeration System for IRT, Bldg 9

CALCULATION PACKAGE: 2

TITLE: Coolant Loop's Tunnel Heat Exchanger

RESPONSIBLE ENGINEER Marksberry

APPROVED _____ DATE _____

REVISION	DATE	DESCRIPTION

		Submittal:	_____	Date:	_____
		Submittal:	_____	Date:	_____
		Submittal:	_____	Date:	_____
_____	Preliminary	Submittal:	_____	Date:	_____
_____	Final	Submittal:	_____	Date:	_____

Aero Systems Engineering, Inc
358 East Fillmore Avenue
St. Paul, Minnesota 55107-1289 U.S.A.
Web: www.aerosysengr.com
Phone: +1-651-227-7515
Fax: +1-651-227-0519
E-mail: ASE@AeroSysEngr.com

Summary

The first cut at a Therminol D12 cooled, tunnel, heat exchanger for IRT has been made. The results have neither been hand checked nor verified by a vendor quote. They were, however, generated using existing spreadsheets that have been used for prior work.

The bottom line is that a brazed aluminum plate-fin will have comparable thermal performance as the Frigid Coil design basis had. In addition, there was a substantial margin on air side pressure loss. The purchase "cost" will be about $300000 based on a comparable quote in mid-2006. There will be additional costs such as installation, piping, etc additional costs, mark-ups, etc.

Note: Recent 2007 quotes from Sumitomo, a Japanese supplier of plate fin heat exchangers, indicate that demand for these units in the cryogenic field and the cost of aluminum result in costs nearly double those from 2006.

Design Basis

The design basis is predicated on tabulated design criteria within the IRT replacement Final Report from Contract No. NAS3-27613 transmitted March 7, 1997. Specifically, the information from Section 2 of that document was directly applicable. The Coolant was chosen as Therminol D-12 with an inlet temperature (from refrigeration system) of -18F.

The following is a restatement of the design point and estimated performance.

	K	L	M	N
47	Fluid		Dry Air	D-12
48	Flow	lbm/sec	1845	1937
49		gpm		17491
50	Inlet T (required)	F	10.94	-18
51	Inlet T - estimated	F	10	
52	Outlet T	F	-2.94	-11.5
53	Pressure Level	psia	14.5	Nom.
54	Pressure Loss (allowed)	psid	0.0361	TBD
55	Estimated Pressure Loss	psid	0.0124	13
56	Heat Load	kW	6048	

The face area was 26.17 ft by 49.17ft on the air side.

From the above table, it can be noted that the estimated thermal performance was better than required and the air side pressure loss was about 1/3 of allowed. The leaving air temperature uniformity was also estimated and is given below. The table is a coarse view of the spatial air temperature distribution. It flows in from the left across the exit pass of the coolant and then over the entrance pass of the coolant and is finally discharged on the right at nominally -3.1F. The nominally temperature variance is 0.13F.

9.97	9.97	air	→	→					0.68365	bdry T =	-3.099
9.97	9.078	7.385	5.815	4.362	3.018	1.759	0.568	-0.557	-1.618	-2.620	-3.100
9.97	9.093	7.426	5.880	4.446	3.118	1.853	0.636	-0.512	-1.594	-2.615	-3.102
9.97	9.108	7.467	5.943	4.528	3.217	1.946	0.702	-0.470	-1.573	-2.611	-3.107
9.97	9.122	7.508	6.006	4.610	3.314	2.036	0.766	-0.430	-1.554	-2.611	-3.115
9.97	9.136	7.547	6.067	4.690	3.411	2.125	0.827	-0.392	-1.537	-2.613	-3.126
9.97	9.150	7.586	6.128	4.769	3.505	2.213	0.887	-0.356	-1.523	-2.618	-3.139
9.97	9.164	7.624	6.187	4.847	3.599	2.298	0.945	-0.323	-1.511	-2.625	-3.155
9.97	9.177	7.662	6.246	4.924	3.691	2.383	1.001	-0.292	-1.502	-2.635	-3.173
9.97	9.190	7.699	6.304	4.999	3.781	2.465	1.055	-0.263	-1.495	-2.647	-3.194
9.97	9.203	7.736	6.361	5.074	3.871	2.546	1.107	-0.236	-1.491	-2.662	-3.218
										bdry T =	-3.231

Note that this was only a first cut, but there is ample room for further refinement. The coolant flow could be reduced, the coolant temperature could be increased, the heat exchanger thermal performance could be increased (decreasing the temperature difference between air and coolant inlet temperatures) among other things.

In summary, the available space, allowable air side pressure loss, and achievable air temperature uniformity restriction are sufficiently comfortable so as to provide a substantial design window. Note that it was designed as a dry core. The FrigidCoil heat exchanger was also not designed for not bulk condensation.

The Heat Exchanger Geometry

The air side passage is formed from 6 fins per inch, plain rectangular fins. The fins are 0.012inches thick and are stacked as a “double” height layer with two layers of 0.464 inch high with and intermediate splitter plate. The total height is 0.928 inches plus splitter plate. The vendor prefers 6 fpi because of mechanical integrity during braze process, but 4 fpi may be possible. The liquid passage is 0.200inch high and is also 6 fins per inch. They are plain fins and are 0.010inch thick. It may be possible to reduce liquid fin height and/or increase fin density. Basically, there is considerable flexibility in adjusting various fin parameters to optimize overall design.

The alternating layers of air and liquid passage are stacked vertically across the 49.17 tunnel width. The coolant flows down to the middle of the tunnel height (along the 26.17 ft dimension) and then turns by an internally mitered flow passage to make an overall two pass cross-counter-flow arrangement. Thus, the tunnel height is divided into modules that are one-half of the 26.17ft in length. Because the heat exchangers are brazed in an oven, the stack height is limited. There

will be approximately 20 modules stack across the 49.17 dimension. This gives a total of 40 identical modules fed vertically by the coolant.

A sketch of a Sumitiomo plate fin heat exchanger module similar in size to the ones required for IRT is attached at the end of this Calculation Package.

The estimated heat exchanger depth in the air flow direction is about 15inches. The liquid velocity is only 5 ft/sec and at low temperature the flow will be in the laminar regime. The thermal conductance ratio is 0.18 (air thermal conductance divided by coolant thermal conductance) so the performance is still dominated by the air thermal resistance. The air velocity within the matrix is about 1240ft/min

A tube and plate type matrix was not evaluated. It would be expected that the tube in plate will fit within the available air side face area, but will have 1.4 to 1.5 times the air side pressure loss. It also should be somewhat less expensive.

Typical Sumitomo Plate Fin Heat Exchanger

SUMITOMO PRECISION PRODUCTS CO.,LTD. HEAT EXCHANGERS SALES & ENGINEERING DEPARTMENT	SHEET No. 1 OF 3 SHEETS		MODEL No. □□□□□□
CUSTOMER: AERO SYSTEMS ENGINEERING, INC.	REV.	DATE Mar.24 '04	REMARKS
Wind Tunnel Heat Exchanger			

DESIGN DATA

Item	Unit	Warm side	Cold side
Fluid		Clean dry air	Treated water
Flow rate		782 lbm/sec.	600 gal/min
Temp. inlet	°□		60
outlet	°F	65□80	
Heat load	kW	350	
Max. op. Press.		14.7 psia	100 psig
Allowable press. drop		0.016 psid	10 psid

BLOCK DETAILS(Brazed aluminium construction)
FLOW PATTERN : CROSS COUNTER FLOW
NUMBER OF MODULES□20

Corrugation code		464P0612	126P0810
Total volume per module	mm	746×2350×130	
No. of layers		50	25
No. of passes		1	2
T/P□t1.05mm S/P□t5mm			

ESTIMATED PERFORMANCE

Item	Unit	Warm side	Cold side
Temp. inlet	°□	71.1	60.0
outlet	°F	69.3	64.0
Net thermal rating	W/K	78730	
Estimated thermal rating	W/K	80074	
Thermal design margin	□	1.7	
Heat load	kW	350	
Block press. drop	psid	0.0153 psid	3.0 psid
Pipe-work press. drop	psid	-	0.43 psid
Total press. drop	psid	0.0153 psid	3.43 psid

Notes 1. This heat exchanger is treated zinc diffusion coating to prevent corrosion at the paths.
2. Please put corrosion inhibitors effective for aluminum into the water, and keep the density to decided value.

Prepared by	Checked by	Approved by
K.Ando		K.Kitani

SUMITOMO PRECISION PRODUCTS CO.,LTD. HEAT EXCHANGERS SALES & ENGINEERING DEPARTMENT	SHEET No. 2 OF 3 SHEETS		MODEL No. □□□□□□
CUSTOMER: AERO SYSTEMS ENGINEERING, INC.	REV.	DATE Mar. 24 '04	REMARKS
Wind Tunnel Heat Exchanger			

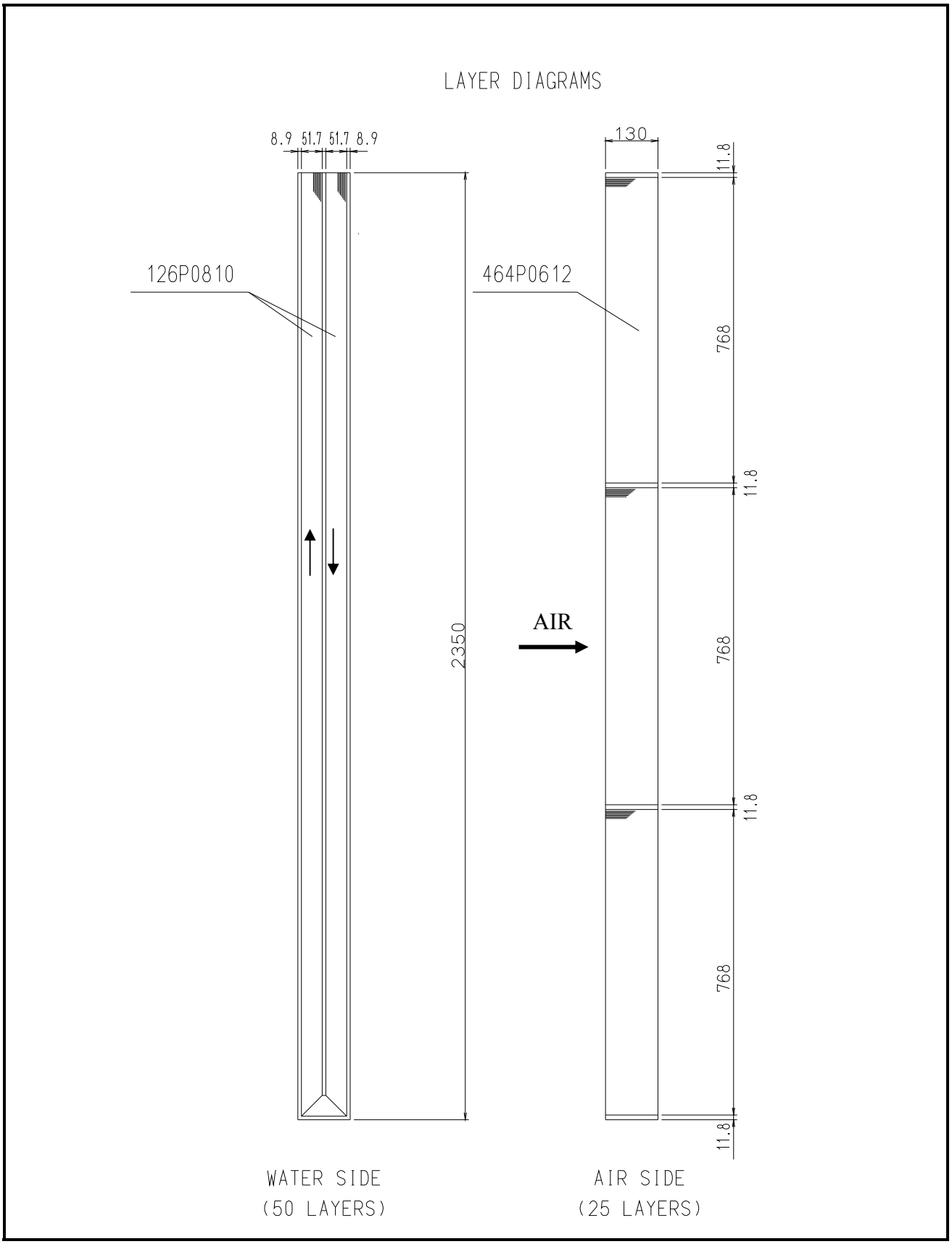
LAYER DIAGRAMS
8.9 51.7 51.7 8.9
126P0810
2350
WATER SIDE
(50 LAYERS)
130
11.8
464P0612
768
11.8
AIR
768
11.8
768
11.8
AIR SIDE
(25 LAYERS)

SUMITOMO PRECISION PRODUCTS CO.,LTD. HEAT EXCHANGERS SALES & ENGINEERING DEPARTMENT	SHEET No. 3 OF 3 SHEETS		MODEL No. □□□□□□
CUSTOMER: AERO SYSTEMS ENGINEERING, INC.	REV.	DATE Mar. 24 '04	REMARKS
Wind Tunnel Heat Exchanger			

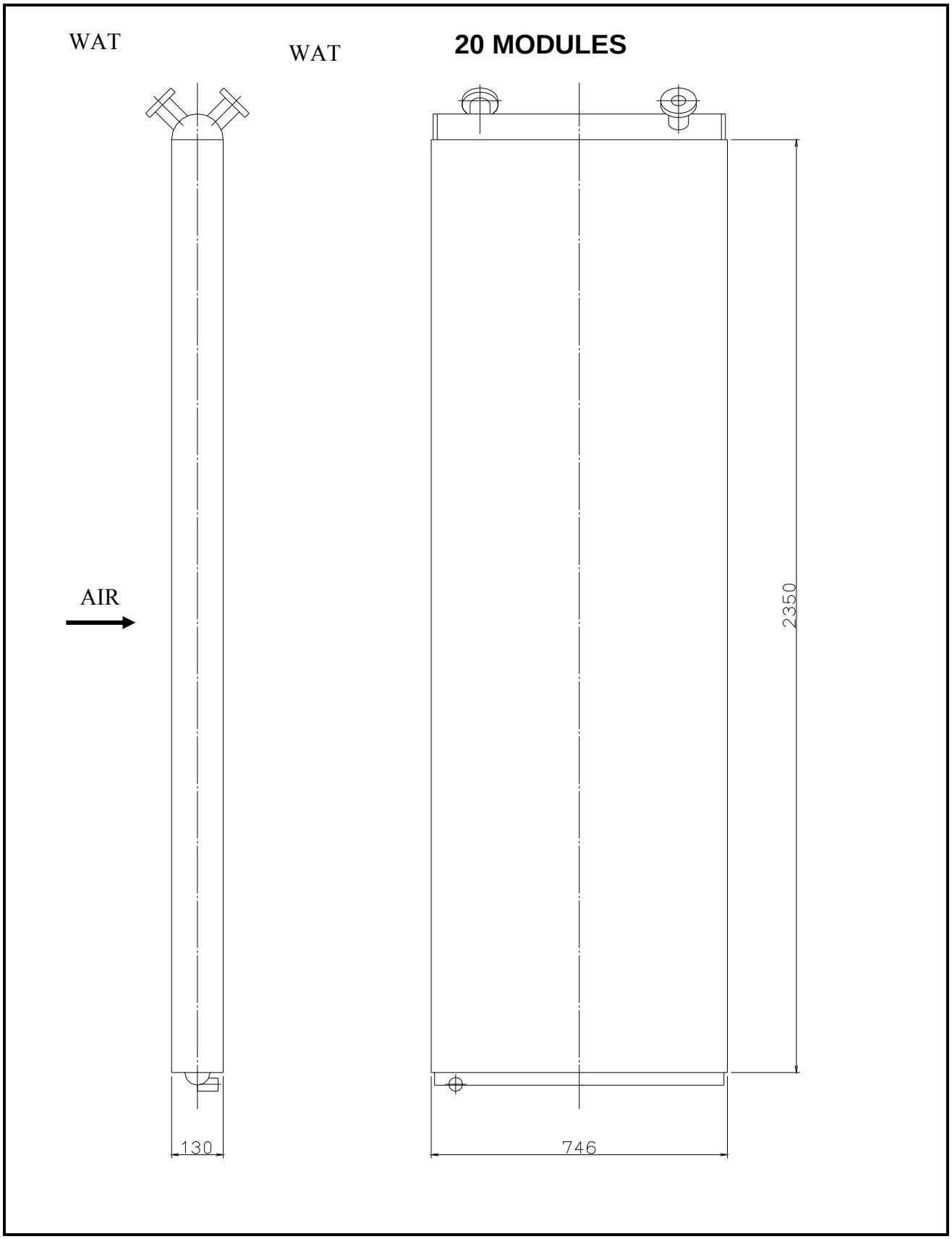
WAT
WAT
20 MODULES
AIR
2350
130
746

AIAA 2002-0740

Performance Assessment of a new Type of Heat Exchanger for Wind Tunnels

Carl E. Jauch
Aero Systems Engineering, St. Paul, MN

Dean F. Long
Aero Systems Engineering, St. Paul, MN

Dennis W. Hergert
The Boeing Company, Seattle, WA

40th AIAA Aerospace Sciences Meeting & Exhibit
14-17 January 2002
Reno, Nevada

For permission to copy or to republish, contact the copyright owner named on the first page.
For AIAA-held copyright, write to AIAA Permissions Department,
1801 Alexander Bell Drive, Suite 500, Reston, VA, 20191-4344.

PERFORMANCE ASSESSMENT OF A NEW TYPE OF HEAT EXCHANGER FOR WIND TUNNELS

Carl E. Jauch*, Dean F. Long†
Aero Systems Engineering
St. Paul, MN

Dennis W. Hergert‡
The Boeing Company
Seattle, WA

Abstract

A major upgrade to the Boeing Transonic Wind Tunnel included the replacement of an air exchanger with a brazed aluminum plate fin heat exchanger. This is the first known installation of this type of heat exchanger in an aerodynamic test facility. The inherent properties of the plate fin heat exchanger make it ideally suited for use in a wind tunnel. Very low blockage is achieved by having all piping connections outside of the wind tunnel. The high heat transfer effectiveness of the plate fin heat exchanger allows for a much smaller face area than conventional wind tunnel heat exchangers, and the mechanical arrangement provides turbulence reducing and flow straightening qualities much like a honeycomb.

The key benefits of the plate fin heat exchanger that led to its installation in the Boeing Transonic Wind Tunnel are discussed in this paper. Model scale and full scale measurements are presented that summarize the performance benefits.

*Senior Engineer, Member AIAA
† Manager, Senior Member AIAA
‡Associate Technical Fellow, Senior Member AIAA

"Copyright © 2002 by The Boeing Company. Published by the American Institute of Aeronautics and Astronautics, Inc. with permission."

Background

The Boeing Transonic Wind Tunnel (BTWT) is a continuous flow, atmospheric facility with an 8 foot high by 12 test section containing 16 slots, giving a porosity of 11%. The 55,000 horsepower electric motor drives a two-stage fixed geometry fan. Maximum Mach number is about 1.12 with no model in the test section.

A major upgrade to the BTWT was completed in 2001 and included replacing the air exchange system with a brazed aluminum plate fin heat exchanger[1].

Heat exchangers are used to remove the heat of compression from the tunnel drive fan. Heat exchangers must be efficient and practical at removing heat with a minimum of air-side pressure loss. Air-side pressure loss is typically traded against heat exchanger frontal area – a larger frontal area results in lower approach velocities and lower pressure drop. Air-side pressure loss can be a measurable component in the total wind tunnel circuit pressure loss, therefore the air side pressure loss must be balanced against the penalty of increased tunnel drive fan motor power and shell cost to accommodate the heat exchanger frontal area.

Prior to the installation of a plate fin type heat exchanger in the BTWT, wind tunnel heat exchangers have been limited to various forms of finned tube heat exchangers. A typical finned tube arrangement is presented in Figure 1. There are a number of heat exchanger materials available to the wind tunnel designer to best fit each tunnel application[2]. A typical finned tube heat exchanger arrangement would include a series of modules installed within a support structure placed in the tunnel. For this type of arrangement, it is not uncommon for the blockage due to the structural support to be as high as 25%.

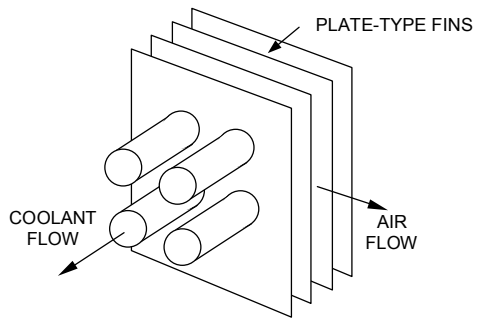

Figure 1: Typical Finned Tube Heat Exchanger Arrangement

Flow induced vibration is a common concern when using a finned tube heat exchanger in a wind tunnel. This can be mitigated somewhat, although rather expensively, by using flattened tubes instead of circular tubes. Wind tunnel operation exposes the finned tube heat exchanger to face velocities that exceed the design range. Over a long period, the heat transfer capability of the heat exchanger is degraded because on a finned tube heat exchanger, the flow induced vibration loosens the mechanical bond between the fins and the tubes, reducing the overall effectiveness of the heat exchanger.

The plate fin arrangement is shown in Figure 2. The entire heat exchanger is brazed together making it very strong and durable assembly, therefore flow conditions will not loosen the structure and there will be no degradation in performance of the heat exchanger over time. Unlike the finned tube heat exchanger, the air flow is thru rectangular passages that allow the plate fin heat exchanger to improve the flow quality of the air stream like a honeycomb.

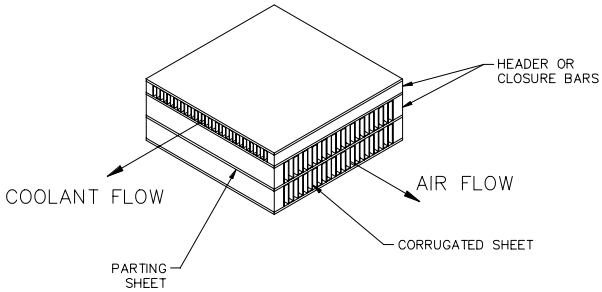

Figure 2: Plate Fin Type Heat Exchanger Arrangement

Advantages of the Plate Fin Heat Exchanger

The plate-fin heat exchanger offers several advantages relative to the finned tube heat exchanger:

- The plate fin heat exchanger requires a smaller face area for the same air pressure loss and heat load
- Heat transfer and pressure drop characteristics are more reliably predicted and flow conditions are well within the standard design parameters of commercially available heat exchangers
- The units are entirely brazed together making them inherently strong and durable. There will be no self-induced flow vibrations and the structure will not loosen over time. Therefore performance will not degrade, nor will any flow disturbances be generated that may affect the flow quality in the test section.
- The air side passages perform a similar function to a long cell honeycomb and will serve to reduce flow angularities and turbulence levels (Figure 3). Passages are approximately 0.5 inch high, 0.2 inch wide and 20 inches deep.
- With a multi-pass coolant arrangement, turns are internal to the heat exchanger and all coolant piping and manifolds can be kept outside of the tunnel (Figure 4). Combined with it's inherent structural integrity, flow blockage is minimized

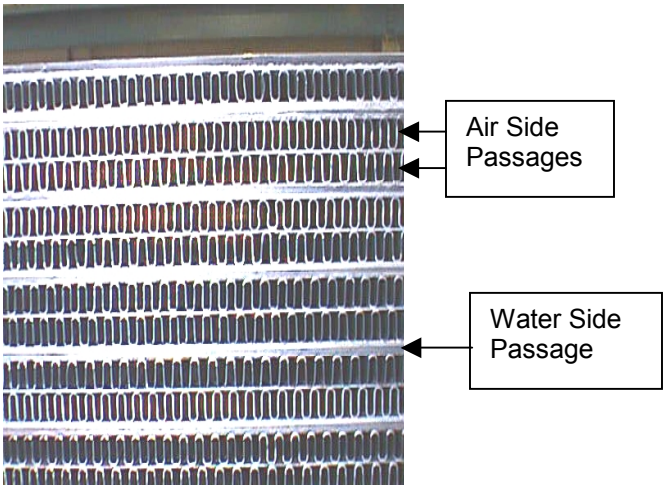

Figure 3: Close-up view of heat exchanger air side passages

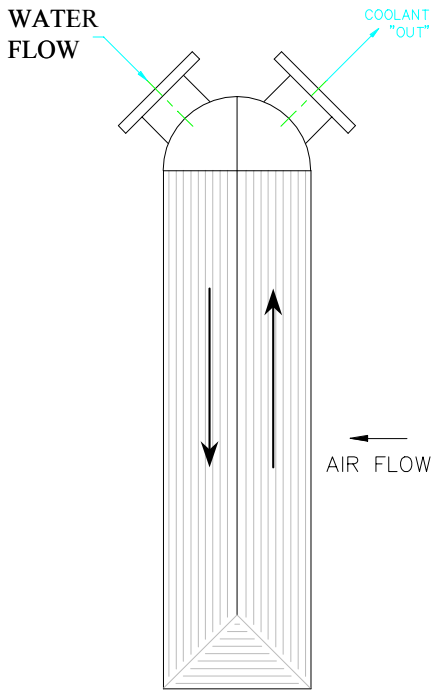

Figure 4: Cross-section of coolant path showing internal mitered turn

Design Point Comparisons

The most obvious physical advantage of the plate fin heat exchanger over a finned tube heat exchanger – for the same design condition – is a much smaller face area. Preliminary design estimates for the BTWT upgrade produced a finned tube heat exchanger that consisted of 28 modules and required a face area of 1,387 square feet. A support structure was required and at least one set of the water connections needed to be made in the air stream. No final design work was performed, but it would be typical for this arrangement to have about 15% blockage. A plate fin heat exchanger that met the same design requirements consisted of 14 modules and required a face area of 935 square feet. The plate fin modules were self-supporting and all water connections could be made outside of the air stream. This installation has only a 2.5% blockage. For the same performance, the face area for the plate fin heat exchanger is 33% smaller.

Cost Comparisons

If considered as an individual component, the cost of a plate fin heat exchanger is greater than that of a finned tube heat exchanger. However, when the overall system cost is compared, they are essentially equal.

This cost comparison is based on conceptual arrangements illustrated in Figures 5 and 6. As can be seen in these layouts, the shell will be considerably larger for the finned tube configuration. In addition, the finned tube heat exchanger requires an internal support structure and water manifolds and connections that are not necessary with the plate fin heat exchanger. Since the support structure and water piping is much simpler, the installation costs for the plate fin heat exchanger are also lower.

This evaluation is based on BTWT and would likely be similar for large, low pressure wind tunnels. On a large pressurized tunnel, the shell costs will be a greater percentage of the system cost, and the system cost for a plate fin heat exchanger is likely to be less than a finned tube heat exchanger. On a small wind tunnel, the opposite would be expected.

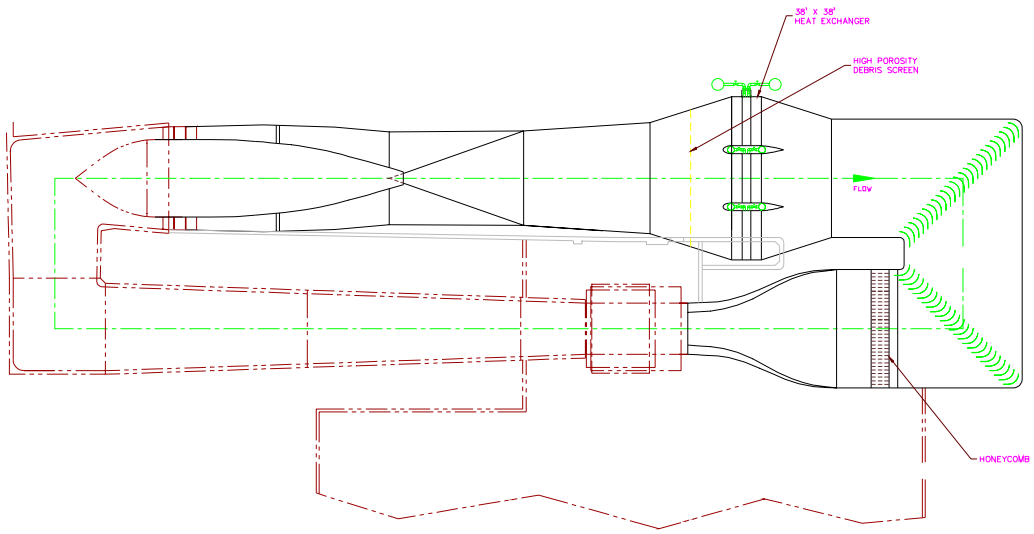

Figure 5: Finned Tube Heat Exchanger Conceptual Arrangement

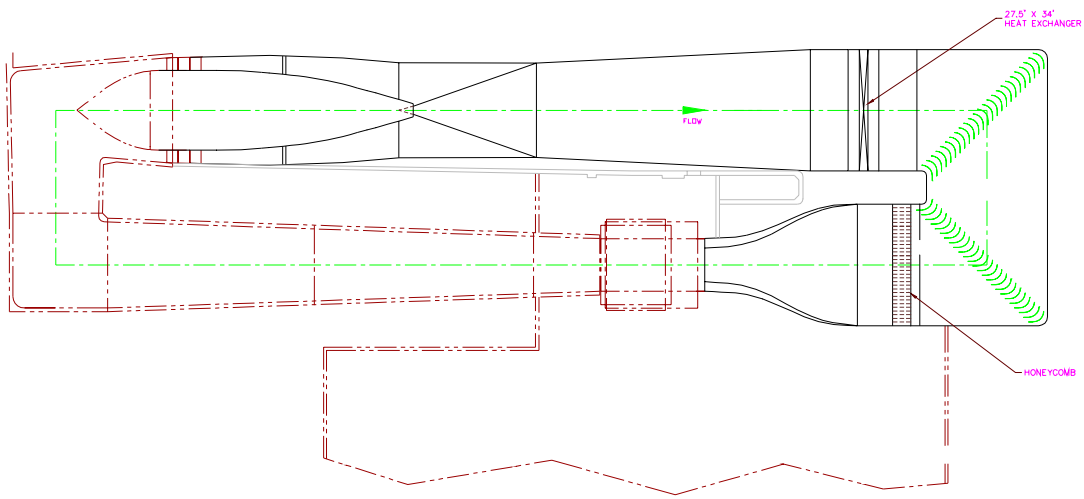

Figure 6: Plate Fin Heat Exchanger Conceptual Arrangement

BTWT Heat Exchanger Arrangement

The plate fin heat exchanger was placed in the drive fan leg of the BTWT, just upstream of the 3rd corner (Figure 7). The arrangement of modules was selected to take advantage of internally mitered turns within the water path. Fourteen modules are used; seven modules above and seven below the tunnel horizontal centerline (refer to Figures 8 and 9). Water inlet and outlet connections are entirely outside of the airflow region. The modules are themselves a two pass cross-counterflow arrangement similar to what is available with a finned tube heat exchanger. However, using internally mitered turns eliminates the u-bends outside of the finned region needed in the finned tube heat exchanger.

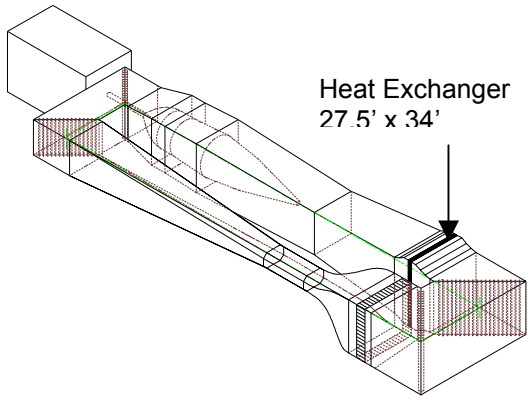

Figure 7: BTWT circuit with plate fin heat exchanger

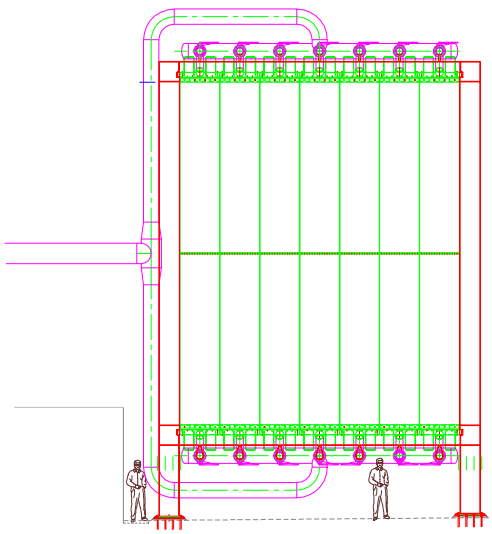

Figure 8: Plate fin heat exchanger arrangement in BTWT

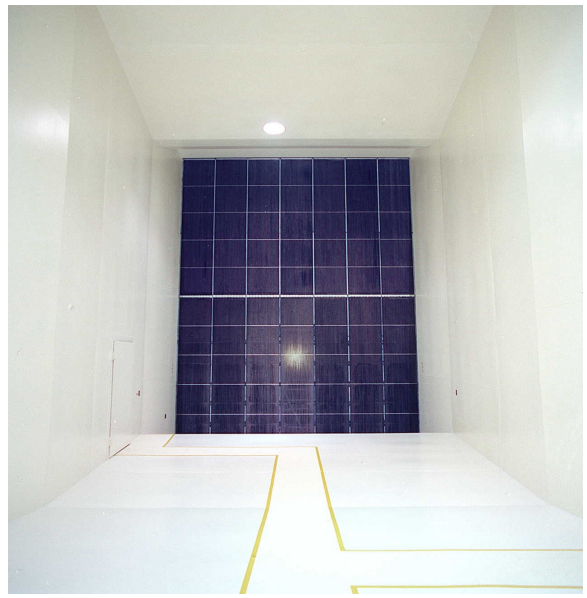

Figure 9: Final installation of heat exchanger in BTWT. View looking downstream from fan.

One design requirement was to provide temperature uniformity within 1 degree F across the test section. Temperature uniformity in the completed tunnel is less than 0.5 degrees. The performance characteristics of the plate fin heat exchanger are particularly suited to very good temperature and flow uniformity. The water side pressure drop is relatively high because the passage height is approximately 0.2 inches and the water length is approximately 34 feet (17 feet for each pass). High water side pressure drop minimizes the outlet air temperature variability between modules as manufacturing variations translate into only small flow rate variations between modules. Therefore, temperature uniformity is nearly guaranteed without the need for individual module flow balancing. With the conventional finned tube heat exchanger, it has been common to include flow balancing valves on each individual module to allow for temperature uniformity adjustments once the wind tunnel is running.

Model Scale Study

A scale model study was conducted to verify that the new back leg diffuser aerodynamic lines would meet the design requirements. Specifically, the objective of the test was to confirm the estimated loss in total pressure in the diffuser and heat exchanger and to quantify

the turbulence reduction characteristics of the heat exchanger. The model consisted of a 1:9 scale replica of the aerodynamic components from the fan exit face to the entrance of corner #3. A segment of the full scale heat exchanger was used to provide the proper Reynolds number and flow development through the individual cells. Figures 10 and 11 illustrate the model set up.

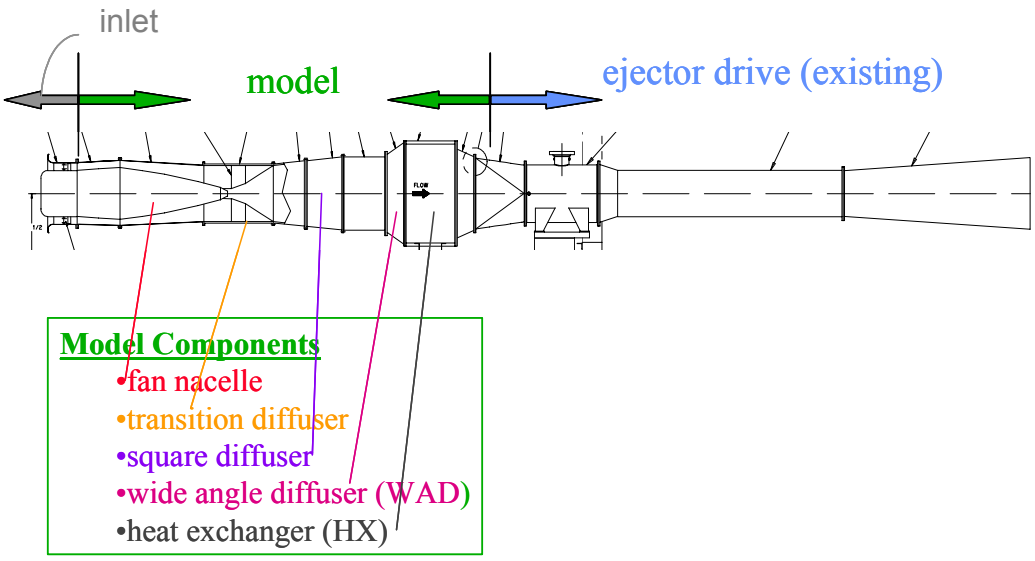

Figure 10: Model scale set-up

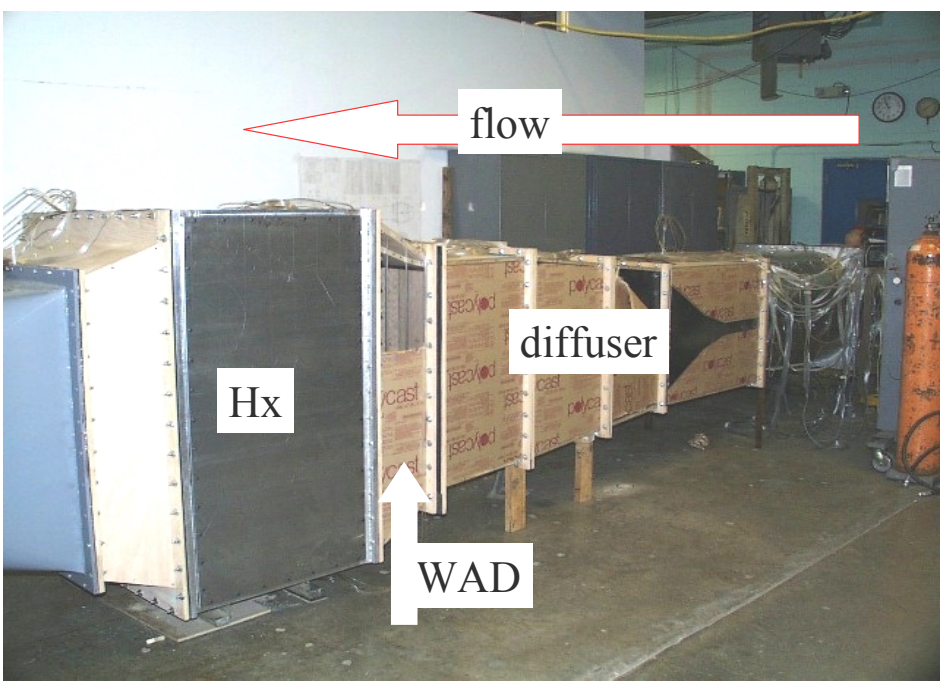

Figure 11: Model scale set-up in ASE test laboratory

The model was configured in an in-draft arrangement; a high pressure ejector nozzle drove the model by drawing in ambient air thru the model inlet. Two sets of swirl vanes and a flow distortion grid were used to provide different flow conditions. The swirl vanes attached to the trailing edges of the nacelle support struts and

could be set to induce either 0 degrees or 10 degrees of swirl. Ten degrees of swirl was chosen to insure that the aerodynamic results were valid even beyond the range of expected test conditions. Swirl in the existing tunnel was measured to be less than 4 degrees with the fan stator blades in their standard position.

Hot wire anemometers were installed upstream and downstream of the heat exchanger section – as mentioned to quantify the turbulence reducing characteristics of the heat exchanger. A five hole flow angularity probe was installed upstream of the heat exchanger – to measure the swirl input into the model.

The turbulence measurements are presented in Figure 12 along with the full scale turbulence measurements.

Full Scale Test Results

During tunnel acceptance and commissioning testing, instruments where installed upstream and downstream of the heat exchanger to measure flow angularity and turbulence intensity. One set of probes was installed on the face of the heat exchanger and another set was installed on the splitter plate at the third corner turning vanes. Both sets of instruments were installed approximately on the tunnel centerline. Due to some problems with the hot wire system, measurements were only taken downstream of the heat exchanger.

Turbulence Intensity

The hot wire tests were conducted using dual sensor hot film probes arranged in an X configuration. One sensor is oriented at +45 degrees to the mean flow and the other is oriented at –45 degrees to the mean flow. Through appropriate processing the axial and transverse components can be identified. The signals are digitized and stored in binary format for subsequent spectral processing using a standard FFT algorithm.

Figure 12 illustrates the results obtained by the hot wire system in both model scale and full scale. As discussed previously, the heat exchanger geometry (including scale) is the same for both model and full scale tests. The full scale result is lower than the model scale result because the measurement location is further downstream (300 inches full scale vs. 24 inches model scale). The frequency spikes in the full scale data are related to the tunnel drive fan blade passing frequency.

Flow Angularity

Five-hole hemispherical probes were used to measure flow angularity. Here, the objective was to quantify the straightening characteristics of the heat exchanger. In the upflow direction (pitch), the probe installation was measured with a digital inclinometer and found to be within 0.1 degrees of horizontal. In the crossflow direction (yaw), the installation orientation could not be measured, so when time permitted the probes where inverted to collect data to remove any installation bias.

When the tunnel operating conditions had stabilized, pressure measurements were recorded with a pressure scanning system over approximately a 30 second period. The pressure transducers were calibrated for 10 inches of water.

The theoretical calibration for a sphere was used to convert the pressure measurements into flow angles. Upflow measurements upstream and downstream of the heat exchanger are shown in Figure 13. Crossflow measurements showed similar results.

Temperature Uniformity

Temperature uniformity in the test section was measured with a rake mounted on the rear sting model support. The rake could be raised and lowered to acquire data at different waterlines. Mean tunnel temperature can be automatically controlled (by the cooling water system controller) to a setpoint input by the tunnel operators, but for the purposes of investigating the temperature uniformity provided by the heat exchanger, the cooling water system was taken out of the control mode and the water entering the heat exchanger was as cold as could be provided. This eliminated any transient effects of the control system during the course of moving the temperature rake in the tunnel. The measured variation in tunnel temperature is presented in the lower set of lines shown in Figure 14. Each line illustrates the lateral variation in temperature. Four tunnel waterlines (heights in the test section) are shown.

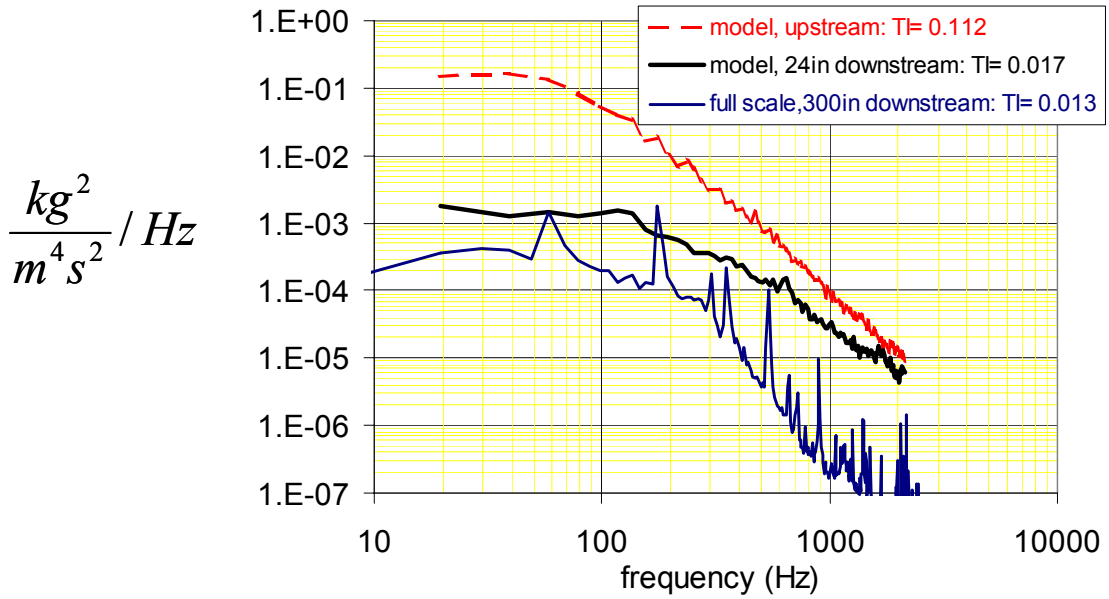

Figure 12: Measured Turbulence Intensity near Plate Fin Heat Exchanger

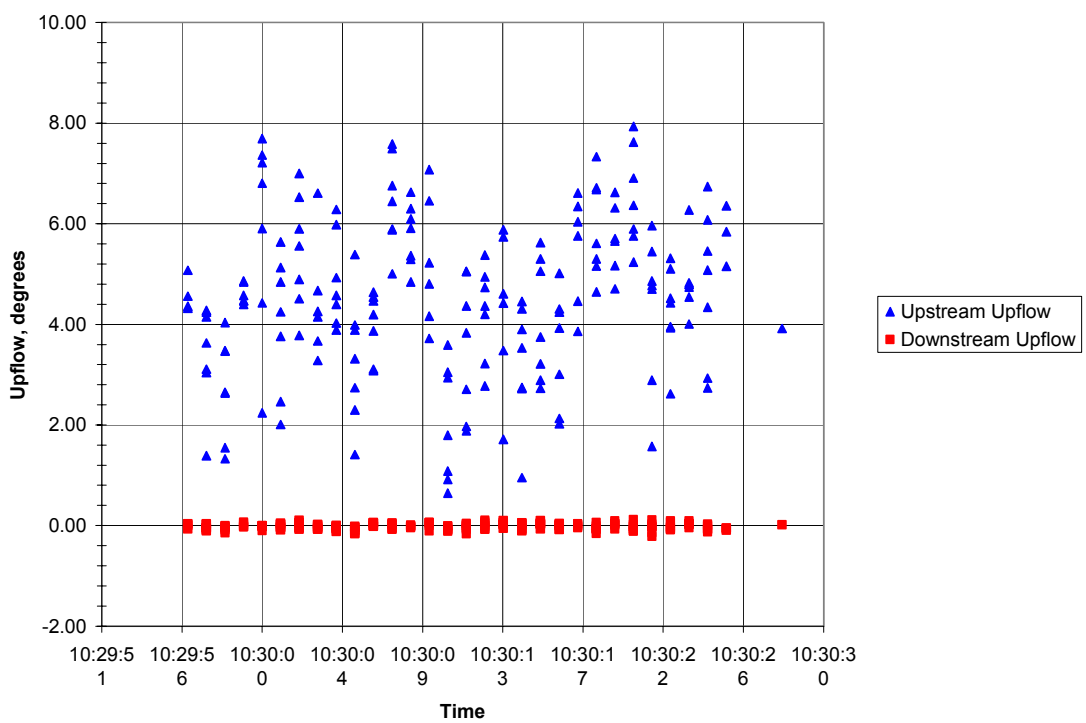

Figure 13: Measured Upflow, Upstream and Downstream of Plate Fin Heat Exchanger

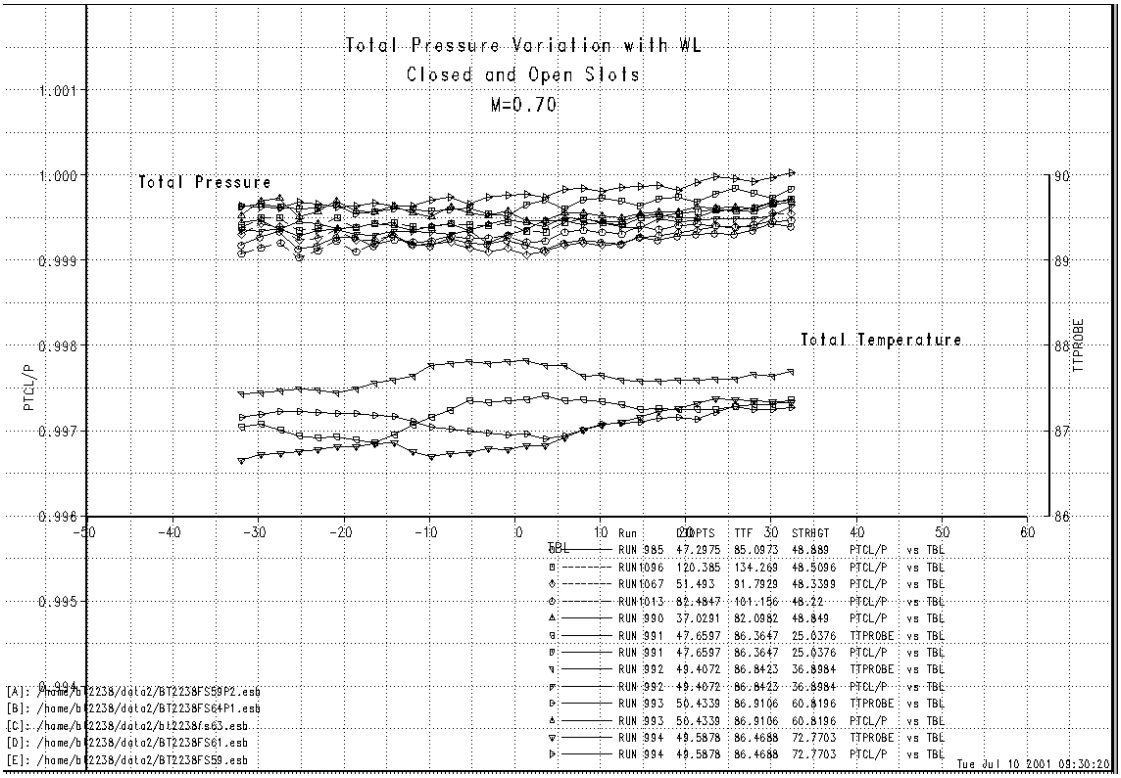

Figure 14: Measured Test Section Temperature Uniformity

Summary

The plate fin type heat exchanger offers many advantages over the traditional finned tube heat exchanger. It requires a smaller frontal area and has much lower blockage because water turns can be internal to the heat exchanger and because all the water connections can be outside the air flow. Of great importance for wind tunnel use are it's inherent geometric properties of low air side blockage and honeycomb-like air side passages. Experience gained from the BTWT circuit upgrade in the form of model scale and full scale measurements has shown that very good flow quality exists downstream of the plate fin heat exchanger. Measured turbulence intensity at the exit of the heat exchanger is very low and the flow straightening characteristics of the heat exchanger is quite good. These results open up the possibility of installing a plate fin type heat exchanger in the stilling chamber and eliminating the need for an additional honeycomb.

References

[1]D. W. Hergert, et al, "Circuit Upgrades to the Boeing Transonic Wind Tunnel (BTWT)", AIAA 2001-0452, January 2001.

[2]Duncan, J., "Heat Exchanger Design Considerations for Transonic Wind Tunnels", AIAA 98-2617, June 1998.

Appendix B

IRTX1 D053 RDG= 227 13-DEC-06 10:07:47 14.35 ESP= 0: 8:32 EU 6/ 12

RUN # 121306.00 TUNNEL/COOLANT FLOW DATA TEST= SWEPT WING

811S	-38.7	5IN	-128.1A	X11	-36.5
831S	-37.3	X51	-35.6	X12	-37.1
8IN	-36.4	X52	-36.0	X13	-34.9
X81	-34.9	X53	-33.6		
X82	-32.7	5EX	-34.9		
X83	-34.7				
8EX	-34.5	X41	-33.5		
811R	-34.5	X42	-32.3		
831R	-34.3	X43	-33.0		
7IN	-38.0	X31	-34.9		
X71	-35.3	X32	-35.6		
X72	-35.3	X33	-33.6		
X73	-33.5				
7EX	-33.8	211S	-28.2		
		231S	-38.6		
6IN	-128.1A	X21	-33.2		
X61	-35.3	X22	-30.9		
X62	-34.3	X23	-31.9		
X63	-32.2	211R	-34.9		
6EX	-33.9	231R	-34.5		

REFRIGERATION		
PMP IN	-2.68	PG
PMP OUT	27.74	PG
PMP DELP(C)	30.42	PD
FLOW1	614.6	GPM
FLOW2	1229.1	GPM
FLOWM1	2.5	GPM
FLOWM2	2.5	GPM
FCP	7.7	PA
FCT	-39.0	C
SP	7.8	PA
HXSP	12.9	PG
HXRT	-6.9	PG
FLASHDP	1.3	PD
PUMPDP	31.6	PD
LWC	9999.000	G/M3
MVD	9999.000	UM

TUNNEL		
DENSITY	0.0027	S/FT3
AVG VEL	100.	KTS
FAN SPEED	144.	RPM
FAN POWER	0.16	MWATT
AVG TOT D	-28.43	C
AVG TOT C		
PT AVG	14.332	
DP AVG	0.265	
PS AVG	14.067	
DRELH	61.91	%
DTEMP	-27.58	C
DDEWPNT	-32.67	C
CRELH	54.05	%
CTEMP	-23.77	C
CDEWPNT	-30.48	C
ICE PAR	-5.00A	V
SPRAY ON=1/OFF=0		
M1 0.0 M2 0.0		
PAIR	19.99	PG
DELP	26.59	PD

100kts, min temp (1)

(1)

10:10:52
12/13/96

MENU

3017 - DETAIL STATUS

	1	2	3	4	8	9	10	11
MTR CURR	173 AMP	177 AMP	178 AMP	153 AMP	177 AMP	178 AMP	178 AMP	175 AMP
MTR PWR	0.6 MW	0.7 MW	0.7 MW	0.6 MW	0.6 MW	0.7 MW	0.3 MW	0.7 MW
CONDSR PRES	76 PSIG	75 PSIG	78 PSIG	73 PSIG	65 PSIG	79 PSIG	81 PSIG	77 PSIG
AUX OIL PMP	OFF	OFF	OFF	OFF	OFF	OFF	OFF	OFF
LUBE OIL PRESS	39 PSIG	27 PSIG	26 PSIG	35 PSIG	31 PSIG	45 PSIG	37 PSIG	39 PSIG
HGBYPS V21	CLSD/ [redacted]	CLSD/ [redacted]	CLSD/ [redacted]	CLSD [redacted]				
HG ISOL VLV	OPEN	OPEN	OPEN	OPEN				
ECONOMIZER V18	CLSD/ [redacted]	CLSD/ [redacted]	CLSD/ [redacted]	CLSD/ [redacted]	CLSD/ [redacted]	CLSD/ [redacted]	CLSD/ [redacted]	CLSD/ [redacted]
COND PURGE VLV	OPEN/ [redacted]	OPEN/ [redacted]	OPEN/ [redacted]	OPEN/ [redacted]	OPEN/ [redacted]	OPEN/ [redacted]	OPEN/ [redacted]	OPEN/ [redacted]
ECONO ISOL VLV	OPEN	OPEN	OPEN	OPEN	OPEN	OPEN	OPEN	OPEN
COMP INLT VLV	OPEN	OPEN	OPEN	OPEN	OPEN	OPEN	OPEN	OPEN
TEMPS:								
REAR BRG	162 F	153 F	153 F	132 F	143 F	146 F	175 F	136 F
SEAL BRG	157 F	169 F	152 F	159 F	167 F	147 F	152 F	155 F
THRUST BRG	155 F	174 F	153 F	159 F	161 F	164 F	156 F	161 F
LUBE OIL	127 F	145 F	140 F	145 F	129 F	144 F	153 F	129 F
MTR GEAR	114 F	128 F	137 F	132 F	133 F	117 F	166 F	131 F
PINION GEAR	109 F	122 F	121 F	116 F	134 F	122 F	137 F	123 F
GEAR BOX OIL	116 F	135 F	135 F	122 F	136 F	128 F	131 F	127 F
MTR BRG INB	120 F	159 F	162 F	151 F	151 F	148 F	152 F	140 F
MTR BRG OUTB	125 F	171 F	154 F	138 F	156 F	150 F	148 F	145 F
COND CTWR	69 F	70 F	69 F	69 F	70 F	72 F	70 F	--- F
COND WTR FLW SW	FLOW	FLOW	FLOW	FLOW	FLOW	FLOW	FLOW	FLOW
INSPEC DATE	04/98	02/97	03/98	02/98	02/97	07/99	08/99	12/99
COMP STARTS TTL	MINS	MINS	MINS	MINS	MINS	MINS	MINS	MINS
COMP RUN TTL	531 MINS	51 MINS	47 MINS	16 MINS	45 MINS	41 MINS	39 MINS	0 MINS

1

10:20:44 MENU

12/13/06

3000 - REFRIGERATION CONTROL

DIA 3000

STATUS

COMPRESSOR NO. :	01	02	03	04	08	09	10	11
CURRENT, AMPS:	173	177	177	155	177	178	178	176
COND. PRES. PSIG:	76	76	75	73	65	79	81	78
OIL PRES, PSIG:	39	27	26	35	31	45	37	39
COND WTR TEMP, F:	69	70	69	69	70	76	70	---
AUXILIARY PMP :	OFF	OFF	OFF	OFF	OFF	OFF	OFF	OFF
BYPASS :	CLOSE	CLOSE	CLOSE	CLOSE				
STATUS :	ON	ON	ON	ON	ON	ON	ON	ON

7 P 7.8 PSIA
S 20.0 PSIA
O 100 %
AUTO

SUCTION HEADER 7.8 PSIA
-36.8 F

O 95% AUTO PRI: 02

O 100% AUTO PRI: 01

O 90% AUTO PRI: 03

O 80% AUTO PRI: 05

O 100% AUTO PRI: 01

O 85% AUTO PRI: 04

MODE: TEMP

8 P 7.5 PSIA
S 20.0 PSIA
O 100 %
AUTO

FLASH COOLER 7.5 PSIA

LVL 0.1 INCH

PUMP #2 PRESS (P) 28 PSIG 5 OFF

TOP -28 C
MID -29 C
BOT -28 C
STEAM 0 %

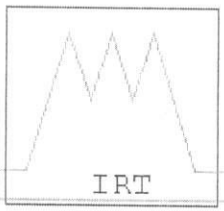

FAN RPM 144

AVG TEMP -28.8 C -19.8 F

SPRAY1 OFF
SPRAY2 OFF

PUMP #1 PRESS (P) 25 PSIG 6 ON

MODE: REFRIG

1: REFRIGERATION

3000

IRTX1 D053 RDG= 227 13-DEC-06 10:35:00 14.35 ESP= 0: 8:32 EU 2/ 12

RUN # 121306.00 TUNNEL/COOLANT FLOW DATA TEST= SWEPT WING

811S	-40.4	5IN	-128.1A	X11	-37.5					
831S	-38.8	X51	-36.6	X12	-37.8			TUNNEL		
8IN	-36.1	X52	-36.7	X13	-35.4			DENSITY	0.0027	S/FT3
X81	-36.0	X53	-34.0					AVG VEL	149.	KTS
X82	-34.1	5EX	-35.6	REFRIGERATION				FAN SPEED	210.	RPM
X83	-35.3			PMP IN		-3.15	PG	FAN POWER	0.55	MWATT
8EX	-35.0	X41	-34.1	PMP OUT		26.37	PG	AVG TOT D	-29.26	C
811R	-36.5	X42	-33.2	PMP DELP(C)		29.52	PD	AVG TOT C		
831R	-36.2	X43	-33.8	FLOW1		622.6	GPM	PT AVG	14.324	
				FLOW2		1245.2	GPM	DP AVG	0.594	
7IN	-38.6	X31	-36.0	FLOWM1		2.5	GPM	PS AVG	13.730	
X71	-36.0	X32	-35.7	FLOWM2		2.1	GPM	DRELH	68.41	%
X72	-36.4	X33	-34.3	FCP		7.2	PA	DTEMP	-29.16	C
X73	-33.7			FCT		-40.4	C	DDEWPNT	-33.15	C
7EX	-34.8	211S	-36.4	SP		7.4	PA	CRELH	60.64	%
		231S	-40.4	HXSP		11.1	PG	CTEMP	-26.00	C
6IN	-128.1A	X21	-34.1	HXRT		-7.3	PG	CDEWPNT	-31.37	C
X61	-36.0	X22	-30.6	FLASHDP		1.1	PD	ICE PAR	-5.00A	V
X62	-34.7	X23	-32.3	PUMPDP		31.0	PD	SPRAY ON=1/OFF=0		
X63	-33.3	211R	-36.2					M1 0.0 M2	0.0	
6EX	-34.5	231R	-36.0	LWC		99999.000	G/M3	PAIR	17.98	PG
				MVD		99999.000	UM	DELP	26.59	PD

150 kts, min temp (2)

10:35:24 MENU 2007 - TUNNEL TEMPERATURE PROFILES 12/13/06

HTD TURNING VANES

A CORNER

TOP	-26.4	C
MID	-27.6	C
BOT	-27.3	C

B CORNER

TOP	-26.3	C
MID	-26.7	C
BOT	-25.4	C

C CORNER

C11	-24.1	C
C12	-25.2	C
C21	-24.6	C
C22	-25.4	C
C31	-25.0	C
C32	-25.6	C
C41	-25.8	C
C42	-25.7	C
C51	-25.2	C
C52	-25.3	C
C61	-25.0	C
C62	-25.3	C
C71	-25.0	C
C72	-25.4	C
C81	-25.2	C
C82	-25.2	C

S HTD WINDOWS

SW	RTD	25.0	C
SWC	RTD	25.0	C
SEC	RTD	25.0	C
SE	RTD	25.0	C

HTCH RTD 25.0

D CORNER

D11	-28.9	C
D12	-29.0	C
D13	-29.5	C
D23	-29.1	C
D22	-29.3	C
D21	-29.2	C
D31	-29.4	C
D32	-29.3	C
D33	-29.8	C
D43	-29.4	C
D42	-29.4	C
D41	-29.4	C
D51	-29.4	C
D52	-29.3	C
D53	-29.6	C
D63	-29.3	C
D62	-29.3	C
D61	-29.3	C
D71	-29.3	C
D72	-28.9	C
D73	-29.0	C
D83	-28.8	C
D82	-28.9	C
D81	-29.3	C

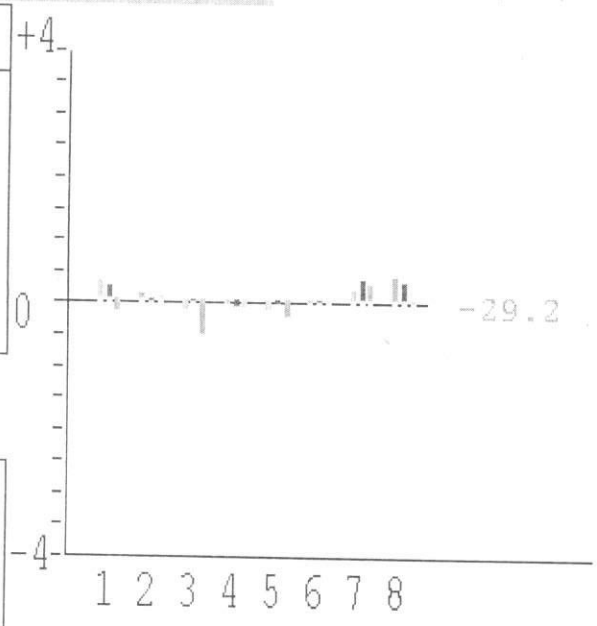

DTEMPS

N HTD WINDOWS

NW	RTD	24.0	C
NC	RTD	25.0	C
NE	RTD	25.0	C

MISC. T & P

OUTSIDE AIR	7	C
BASEMENT P	0.00	"H2O

W1 Graphics Window

Print

N VEL.	149.6	KNOTS
S VEL.	149.6	KNOTS
AVG V	149.7	KNOTS
AVG T	-29.2	C
POWER	0.55	MWATT
ENTER TUNN	NO	
AIR SP	20.0	PG
WTRDPSP1	25.0	PD
TIMESET1	0.50	MIN
TIMEREM1	0.5	MIN
WTRDPSP2	25.0	PD
TIMESET2	10.00	MIN
TIMEREM2	10.0	MIN
MBUS	: :	ENABLED
SPUMP1	: :	ON
SPUMP2	: :	OFF
SPUMP3	: :	OFF
ALLOFF	: :	
SQSPRA	: :	OFF
SPRAY1	: :	OFF
SPRAY2	: :	OFF
FL HD1	-0.338	GPM
FL HD2	3.253	GPM
RELHUM	68.4	PCT
AIRTEM	-29.1	C
TDEW	-33.1	C
SPD A	225	RPM
FBR VIBS	0.06	IN/S
RBR VIBS	0.11	IN/S

B STOP MOTOR : :

2007

10:35:55 MENU **2001 - TUNNEL OVERVIEW** 12/13/06

CDELP 0.077 "WTR

0."OPEN

TOP -25.2 C
MID -25.5 C
BOT -25.2 C

CLOSED

MANUAL

3 DRIVE

S 210.0 RPM
V 212.4 RPM
A 225 RPM

TOP -26.3 C
MID -26.7 C
BOT -25.4 C

CORNER C

STOP NVENT 1

STOP SVENT 2

CORNER B

NEW HT EXCHGR

HE-DP 0.650

CLOSED

0."OPEN

EXDRDP 70 PSFD

211 RPM

0.597 DEL P
14.311 TOTAL
NORTH PITOT

1-01-00

ESCT AEX FLO 5.849 PPS
WDPF AEX FLO 5.94 "

+ 4 −

P -0.52 DEG
S 0.0 DEG
Q 0.0 RATE (40% MAX)
MANUAL

D CORNER

A CORNER

UPPER

LOWER

TOP -29.0 C
MID -29.3 C
BOT -29.0 C

SOUTH PITOT
14.333 TOTAL
0.599 DEL P

BALANCE CHAMBER PRESS.
13.853 PA

TOP -26.5 C
MID -27.6 C
BOT -27.3 C

DDELP -0.57 "WTR

W1 Graphics Window

Print

N VEL.	149.5	KNOTS
S VEL.	149.7	KNOTS
AVG V	149.7	KNOTS
AVG T	-29.3	C
POWER	0.55	MWATT
ENTER TUNN	NO	
AIR SP	20.0	PG
WTRDPSP1	25.0	PD
TIMESET1	0.50	MIN
TIMEREM1	0.5	MIN
WTRDPSP2	25.0	PD
TIMESET2	10.00	MIN
TIMEREM2	10.0	MIN
MBUS	: :	ENABLED
SPUMP1	: :	ON
SPUMP2	: :	OFF
SPUMP3	: :	OFF
ALLOFF	: :	
SQSPRA	: :	OFF
SPRAY1	: :	OFF
SPRAY2	: :	OFF
FL HD1	-0.338	GPM
FL HD2	3.261	GPM
RELHUM	68.5	PCT
AIRTEM	-29.2	C
TDEW	-33.1	C
SPD A	225	RPM
FBR VIBS	0.07	IN/S
RBR VIBS	0.10	IN/S

8 STOP MOTOR : :

(2)

10:35:15 MENU **3000 - REFRIGERATION CONTROL** DIA 3000

12/10/06 STATUS

COMPRESSOR NO. :	01	02	03	04	08	09	10	11
CURRENT, AMPS:	169	172	173	151	173	176	174	172
COND. PRES. PSIG:	73	73	73	71	62	77	79	75
OIL PRES, PSIG:	36	27	26	33	31	44	36	38
COND WTR TEMP, F:	67	69	68	68	68	74	69	---
AUXILIARY PMP :	OFF	OFF	OFF	OFF	OFF	OFF	OFF	OFF
BYPASS :	CLOSE	CLOSE	CLOSE	CLOSE				
STATUS :	ON	ON	ON	ON	ON	ON	ON	ON
	: :	: :	: :	: :	: :	: :	: :	: :

7 P 7.3 PSIA
S 20.0 PSIA
O 100 %
SUCTION HEADER 7.3 PSIA
-38.1 F

O 95% AUTO PRI: 02 | O 100% AUTO PRI: 01 | O 90% AUTO PRI: 03 | O 80% AUTO PRI: 05 | O 100% AUTO PRI: 01 | O 85% AUTO PRI: 04

MODE: TEMP 8 P 7.3 PSIA
S 20.0 PSIA
O 100 %
FLASH COOLER 7.2 PSIA
LVL --- INCH

PUMP #2 PRESS (P) 35 PSIG 5 OFF

TOP -29 C
MID -29 C
BOT -28 C
STEAM 0 %

IRT

FAN RPM 211
AVG TEMP -29.2 C -20.6 F
SPRAY1 OFF
SPRAY2 OFF

PUMP #1 PRESS (P) 24 PSIG 6 ON

MODE: REFRIG

:1: REFRIGERATION

10:35:45
12/13/06

MENU

3017 - DETAIL STATUS

	1	2	3	4	8	9	10	11
MTR CURR	170 AMP	172 AMP	173 AMP	151 AMP	172 AMP	176 AMP	174 AMP	172 AMP
MTR PWR	0.6 MW	0.6 MW	0.7 MW	0.6 MW	0.6 MW	0.6 MW	0.3 MW	0.6 MW
CONDSR PRES	75 PSIG	73 PSIG	74 PSIG	71 PSIG	62 PSIG	77 PSIG	79 PSIG	75 PSIG
AUX OIL PMP	OFF	OFF	OFF	OFF	OFF	OFF	OFF	OFF
LUBE OIL PRESS	38 PSIG	27 PSIG	26 PSIG	23 PSIG	31 PSIG	44 PSIG	36 PSIG	38 PSIG
HGBYPS V21	CLSD/ [redacted]	CLSD/ [redacted]	CLSD/ [redacted]	CLSD [redacted]				
HG ISOL VLV	OPEN	OPEN	OPEN	OPEN				
ECONOMIZER V18	CLSD/ [redacted]	CLSD/ [redacted]	CLSD/ [redacted]	CLSD/ [redacted]	CLSD/ [redacted]	CLSD/ [redacted]	CLSD/ [redacted]	CLSD/ [redacted]
COND PURGE VLV	OPEN/ [redacted]	OPEN/ [redacted]	OPEN/ [redacted]	OPEN/ [redacted]	OPEN/ [redacted]	OPEN/ [redacted]	OPEN/ [redacted]	OPEN/ [redacted]
ECONO ISOL VLV	OPEN	OPEN	OPEN	OPEN	OPEN	OPEN	OPEN	OPEN
COMP INLT VLV	OPEN	OPEN	OPEN	OPEN	OPEN	OPEN	OPEN	OPEN
TEMPS:								
REAR BRG	168 F	155 F	157 F	137 F	145 F	148 F	178 F	142 F
SEAL BRG	166 F	173 F	158 F	164 F	170 F	152 F	159 F	168 F
THRUST BRG	163 F	176 F	159 F	165 F	162 F	165 F	159 F	164 F
LUBE OIL	145 F	149 F	142 F	155 F	134 F	150 F	158 F	142 F
MTR GEAR	129 F	129 F	138 F	136 F	135 F	119 F	166 F	133 F
PINION GEAR	116 F	121 F	122 F	121 F	135 F	123 F	140 F	125 F
GEAR BOX OIL	126 F	136 F	136 F	131 F	138 F	131 F	132 F	132 F
MTR BRG INB	138 F	165 F	168 F	169 F	157 F	156 F	160 F	152 F
MTR BRG OUTB	146 F	175 F	161 F	159 F	165 F	160 F	161 F	162 F
COND CTWR	67 F	58 F	60 F	68 F	68 F	75 F	34 F	--- F
COND WTR FLW SW	FLOW	FLOW	FLOW	FLOW	FLOW	FLOW	FLOW	FLOW
INSPEC DATE	04/98	02/97	03/98	02/98	02/97	07/99	08/99	12/99
COMP STARTS TTL	MINS	MINS	MINS	MINS	MINS	MINS	MINS	MINS
COMP RUN TTL	531 MINS	76 MINS	71 MINS	41 MINS	70 MINS	66 MINS	64 MINS	0 MINS

12:19:36 MENU

3000 - REFRIGERATION CONTROL

DIA 3000

12/13/06

STATUS

COMPRESSOR NO. :	01	02	03	04	08	09	10	11
CURRENT, AMPS:	193	201	190	-0.	-1	-1	-0.	-0.
COND. PRES. PSIG:	84	84	81	-4	-2	-2	-3	-4
OIL PRES, PSIG:	37	30	28	37	39	40	38	35
COND WTR TEMP, F:	70	71	71	-97	68	73	19	---
AUXILIARY PMP :	OFF	OFF	OFF	ON	ON	ON	ON	ON
BYPASS :	CLOSE	CLOSE	CLOSE	CLOSE				
STATUS :	ON	ON	ON	OFF	OFF	OFF	OFF	OFF
	: :	: :	: :	: :	: :	: :	: :	: :

7 P 9.6 PSIA
S 20.0 PSIA
O 100 %

SUCTION HEADER 9.6 PSIA
6.4 F

O 0.0%	O 2.6%	O 0.0%	O 0.0%	O 2.6%	O 0.0%
AUTO	AUTO	AUTO	AUTO	AUTO	AUTO
PRI: 02	PRI: 01	PRI: 03	PRI: 05	PRI: 01	PRI: 04

MODE: TEMP

8 P 23.4 PSIA
S 20.0 PSIA
O 3 %

FLASH COOLER 23.4 PSIA

LVL 0.0 INCH

PUMP #2 PRESS

P

31 PSIG

5 OFF

TOP -10 C

MID -10 C

BOT -10 C

STEAM 0 %

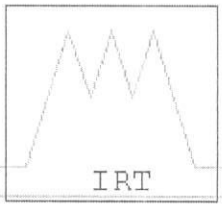

FAN RPM 224

AVG TEMP -10.6 C 12.96 F

SPRAY1 OFF
SPRAY2 OFF

PUMP #1 PRESS

P

30 PSIG

6 ON

MODE: REFRIG

:1: REFRIGERATION

3000

12:19:47 MENU
12/13/06

3017 - DETAIL STATUS

	1	2	3	4	8	9	10	11
MTR CURR	192 AMP	201 AMP	189 AMP	0.1 AMP	-0. AMP	-0. AMP	0.3 AMP	-0. AMP
MTR PWR	0.7 MW	0.8 MW	0.8 MW	--- MW	--- MW	--- MW	--- MW	--- MW
CONDSR PRES	84 PSIG	84 PSIG	82 PSIG	-3 PSIG	-2 PSIG	-1 PSIG	-3 PSIG	-4 PSIG
AUX OIL PMP	OFF	OFF	OFF	ON	ON	ON	ON	ON
LUBE OIL PRESS	37 PSIG	30 PSIG	28 PSIG	37 PSIG	39 PSIG	39 PSIG	38 PSIG	35 PSIG
HGBYPS V21	CLSD/ [redacted]	CLSD/ [redacted]	OPEN/ [redacted]	CLSD [redacted]				
HG ISOL VLV	OPEN	OPEN	OPEN	OPEN				
ECONOMIZER V18	CLSD/ [redacted]	CLSD/ [redacted]	CLSD/ [redacted]	CLSD/ [redacted]	CLSD/ [redacted]	CLSD/ [redacted]	CLSD/ [redacted]	CLSD/ [redacted]
COND PURGE VLV	OPEN/ [redacted]	OPEN/ [redacted]	OPEN/ [redacted]	OPEN/ [redacted]	OPEN/ [redacted]	OPEN/ [redacted]	OPEN/ [redacted]	OPEN/ [redacted]
ECONO ISOL VLV	OPEN	OPEN	OPEN	OPEN	OPEN	OPEN	OPEN	OPEN
COMP INLT VLV	OPEN	OPEN	OPEN	OPEN	OPEN	OPEN	OPEN	OPEN
TEMPS:								
REAR BRG	166 F	154 F	159 F	114 F	113 F	110 F	114 F	121 F
SEAL BRG	170 F	173 F	164 F	126 F	139 F	124 F	125 F	142 F
THRUST BRG	167 F	173 F	163 F	120 F	116 F	116 F	114 F	123 F
LUBE OIL	158 F	153 F	145 F	139 F	133 F	137 F	141 F	134 F
MTR GEAR	135 F	129 F	139 F	130 F	136 F	126 F	129 F	129 F
PINION GEAR	121 F	124 F	123 F	129 F	138 F	128 F	127 F	130 F
GEAR BOX OIL	132 F	138 F	137 F	117 F	132 F	111 F	116 F	117 F
MTR BRG INB	153 F	170 F	172 F	132 F	133 F	129 F	129 F	127 F
MTR BRG OUTB	158 F	186 F	167 F	139 F	150 F	139 F	136 F	139 F
COND CTWR	70 F	71 F	70 F	-37 F	68 F	73 F	13 F	--- F
COND WTR FLW SW	FLOW	FLOW	FLOW	FLOW	FLOW	FLOW	FLOW	FLOW
INSPEC DATE	04/98	02/97	03/98	02/98	02/97	07/99	08/99	12/99
COMP STARTS TTL	MINS	MINS	MINS	MINS	MINS	MINS	MINS	MINS
COMP RUN TTL	531 MINS	180 MINS	176 MINS	98 MINS	141 MINS	131 MINS	125 MINS	0 MINS

12:19:57 MENU **2001 - TUNNEL OVERVIEW** 12/13/06

CDELP 0.048 "WTR

0."OPEN MANUAL

S 211.0 RPM
V 224.2 RPM
A 237 RPM

TOP -8.9 C
MID -9.0 C
BOT -8.5 C

CLOSED 3 DRIVE

TOP -10.4 C
MID -10.1 C
BOT -9.8 C

CORNER C STOP NVENT 1

STOP SVENT 2

CORNER B

NEW HT EXCHGR

HE-DP 0.603

CLOSED 0."OPEN

EXDRDP 65 PSFD

224 RPM

0.555 DEL P
14.301 TOTAL
NORTH PITOT

1-01-00

ESCT AEX FLO 5.842 PPS
WDPF AEX FLO 5.25 "

+ P -0.52 DEG
S 0.0 DEG
4 C 0.0 RATE (40% MAX)
MANUAL

D CORNER

A CORNER

UPPER LOWER

TOP -10.6 C
MID -10.6 C
BOT -10.6 C

SOUTH PITOT
14.323 TOTAL
0.559 DEL P

BALANCE CHAMBER PRESS.
13.877 PA

TOP -10.6 C
MID -10.8 C
BOT -11.0 C

DDELP -0.57 "WTR

W1 Graphics Window

Print

N VEL.	149.7	KNOTS
S VEL.	150.0	KNOTS
AVG V	149.9	KNOTS
AVG T	-10.6 C	
POWER	0.55	MWATT
ENTER TUNN	NO	
AIR SP	20.0	PG
WTRDPSP1	25.0	PD
TIMESET1	0.50	MIN
TIMEREM1	0.5	MIN
WTRDPSP2	75.0	PD
TIMESET2	20.00	MIN
TIMEREM2	20.0	MIN
MBUS	: :	ENABLED
SPUMP1	: :	ON
SPUMP2	: :	OFF
SPUMP3	: :	OFF
ALLOFF	: :	
SQSPRA	: :	OFF
SPRAY1	: :	OFF
SPRAY2	: :	OFF
FL HD1	-0.338	GPM
FL HD2	6.640	GPM
RELHUM	92.0	PCT
AIRTEM	-10.5	C
TDEW	-11.5	C
SPD A	237	RPM
FBR VIBS	0.08	IN/S
RBR VIBS	0.06	IN/S

8 STOP MOTOR : :

2001

12:19:53 MENU **2007 - TUNNEL TEMPERATURE PROFILES** 12/13/06

HTD TURNING VANES

A CORNER

TOP	-10.7	C
MID	-10.8	C
BOT	-11.2	C

B CORNER

TOP	-10.6	C
MID	-10.1	C
BOT	-9.8	C

C CORNER

C11	-8.5	C
C12	-8.9	C
C21	-8.4	C
C22	-9.2	C
C31	-8.6	C
C32	-9.0	C
C41	-9.2	C
C42	-9.2	C
C51	-8.5	C
C52	-8.6	C
C61	-8.4	C
C62	-8.9	C
C71	-8.6	C
C72	-8.8	C
C81	-8.6	C
C82	-8.5	C

S HTD WINDOWS

SW	RTD	25.0	C
SWC	RTD	25.0	C
SEC	RTD	25.1	C
SE	RTD	25.0	C

HTCH RTD 25.0

D CORNER

D11	-10.7	C
D12	-10.6	C
D13	-10.7	C
D23	-10.5	C
D22	-10.6	C
D21	-10.4	C
D31	-10.7	C
D32	-10.6	C
D33	-10.8	C
D43	-10.4	C
D42	-10.5	C
D41	-10.5	C
D51	-10.7	C
D52	-10.7	C
D53	-10.6	C
D63	-10.4	C
D62	-10.6	C
D61	-10.5	C
D71	-10.6	C
D72	-10.6	C
D73	-10.5	C
D83	-10.5	C
D82	-10.6	C
D81	-10.6	C

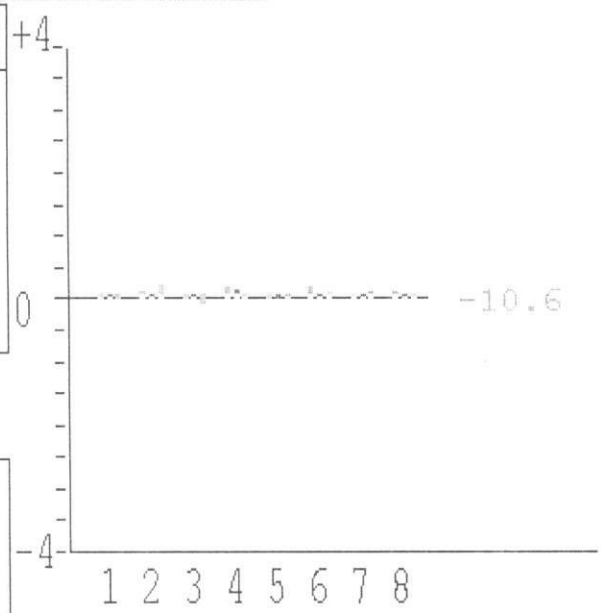

DTEMPS

N HTD WINDOWS

NW	RTD	24.0	C
NC	RTD	25.1	C
NE	RTD	25.1	C

MISC. T & P

OUTSIDE AIR	9	C
BASEMENT P	0.00	"H20

W4 Graphics Window

Print

N VEL.	149.1	KNOTS
S VEL.	149.6	KNOTS
AVG V	149.3	KNOTS
AVG T	-10.6 C	
POWER	0.55	MWATT
ENTER TUNN	NO	
AIR SP	20.0	PG
WTRDPSP1	25.0	PD
TIMESET1	0.50	MIN
TIMEREM1	0.5	MIN
WTRDPSP2	75.0	PD
TIMESET2	20.00	MIN
TIMEREM2	20.0	MIN
MBUS	: :	ENABLED
SPUMP1	: :	ON
SPUMP2	: :	OFF
SPUMP3	: :	OFF
ALLOFF	: :	
SQSPRA	: :	OFF
SPRAY1	: :	OFF
SPRAY2	: :	OFF
FL HD1	-0.338	GPM
FL HD2	6.541	GPM
RELHUM	92.2	PCT
AIRTEM	-10.5	C
TDEW	-11.5	C
SPD A	237	RPM
FBR VIBS	0.08	IN/S
RBR VIBS	0.07	IN/S

STOP MOTOR : :

2007

11:26:13 MENU
12/13/06

3017 - DETAIL STATUS

	1	2	3	4	8	9	10	11
MTR CURR	189 AMP	.197 AMP	179 AMP	-0. AMP	0.1 AMP	-0. AMP	-0. AMP	-0. AMP
MTR PWR	0.7 MW	0.7 MW	0.7 MW	--- MW	--- MW	--- MW	--- MW	--- MW
CONDSR PRES	83 PSIG	84 PSIG	52 PSIG	-3 PSIG	-2 PSIG	-1 PSIG	-3 PSIG	-4 PSIG
AUX OIL PMP	OFF	OFF	OFF	ON	ON	ON	ON	ON
LUBE OIL PRESS	37 PSIG	30 PSIG	28 PSIG	38 PSIG	39 PSIG	40 PSIG	39 PSIG	35 PSIG
HGBYPS V21	CLSD/ [redacted]	CLSD/ [redacted]	OPEN/ [redacted]	CLSD [redacted]				
HG ISOL VLV	OPEN	OPEN	OPEN	OPEN				
ECONOMIZER V18	CLSD/ [redacted]	CLSD/ [redacted]	CLSD/ [redacted]	CLSD/ [redacted]	CLSD/ [redacted]	CLSD/ [redacted]	CLSD/ [redacted]	CLSD/ [redacted]
COND PURGE VLV	OPEN/ [redacted]	OPEN/ [redacted]	OPEN/ [redacted]	OPEN/ [redacted]	OPEN/ [redacted]	OPEN/ [redacted]	OPEN/ [redacted]	OPEN/ [redacted]
ECONO ISOL VLV	OPEN	OPEN	OPEN	OPEN	OPEN	OPEN	OPEN	OPEN
COMP INLT VLV	OPEN	OPEN	OPEN	OPEN	OPEN	OPEN	OPEN	OPEN
TEMPS:								
REAR BRG	166 F	154 F	160 F	113 F	111 F	109 F	112 F	119 F
SEAL BRG	169 F	174 F	164 F	124 F	136 F	122 F	123 F	139 F
THRUST BRG	166 F	174 F	163 F	118 F	115 F	115 F	113 F	121 F
LUBE OIL	159 F	153 F	145 F	136 F	131 F	134 F	138 F	131 F
MTR GEAR	136 F	130 F	140 F	131 F	134 F	125 F	127 F	128 F
PINION GEAR	121 F	125 F	124 F	128 F	137 F	127 F	126 F	129 F
GEAR BOX OIL	132 F	128 F	137 F	116 F	131 F	110 F	115 F	116 F
MTR BRG INB	153 F	170 F	172 F	130 F	130 F	127 F	127 F	125 F
MTR BRG OUTB	159 F	186 F	167 F	137 F	146 F	126 F	133 F	136 F
COND CTWR	71 F	72 F	68 F	-95 F	69 F	73 F	23 F	--- F
COND WTR FLW SW	FLOW	FLOW	FLOW	FLOW	FLOW	FLOW	FLOW	FLOW
INSPEC DATE	04/98	02/97	03/98	02/98	02/97	07/99	08/99	12/99
COMP STARTS TTL	MINS	MINS	MINS	MINS	MINS	MINS	MINS	MINS
COMP RUN TTL	531 MINS	186 MINS	182 MINS	98 MINS	141 MINS	131 MINS	125 MINS	0 MINS

12:26:07 MENU **2007 - TUNNEL TEMPERATURE PROFILES** 12/13/06

HTD TURNING VANES

A CORNER

TOP	-10.2	C
MID	-10.3	C
BOT	-10.6	C

B CORNER

TOP	-10.2	C
MID	-9.6	C
BOT	-9.6	C

C CORNER

C11	-8.7	C
C12	-9.0	C
C21	-8.4	C
C22	-9.4	C
C31	-8.7	C
C32	-9.1	C
C41	-9.4	C
C42	-9.4	C
C51	-8.6	C
C52	-8.7	C
C61	-8.6	C
C62	-9.0	C
C71	-8.8	C
C72	-8.8	C
C81	-8.7	C
C82	-8.7	C

S HTD WINDOWS

SW	RTD	25.1	C
SWC	RTD	25.0	C
SEC	RTD	25.0	C
SE	RTD	25.1	C

HTCH RTD 25.0

D CORNER

D11	-10.1	C
D12	-10.1	C
D13	-10.1	C
D23	-10.0	C
D22	-10.1	C
D21	-9.9	C
D31	-10.2	C
D32	-10.1	C
D33	-10.3	C
D43	-10.0	C
D42	-10.0	C
D41	-10.1	C
D51	-10.3	C
D52	-10.3	C
D53	-10.1	C
D63	-10.1	C
D62	-10.2	C
D61	-10.1	C
D71	-10.2	C
D72	-10.2	C
D73	-10.1	C
D83	-10.3	C
D82	-10.3	C
D81	-10.3	C

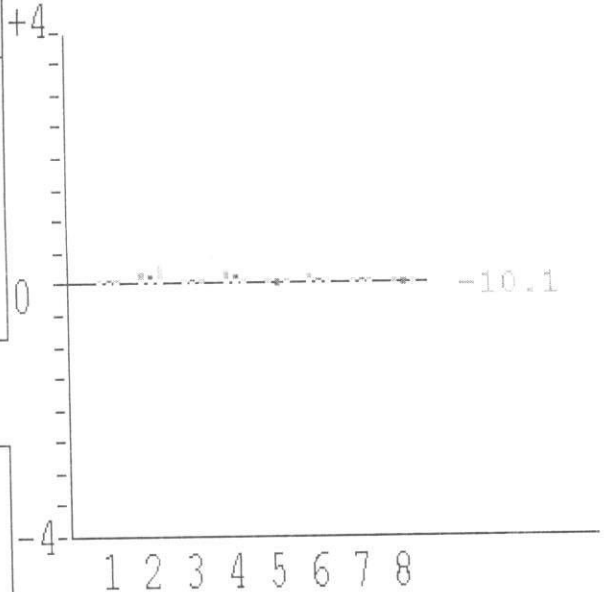

DTEMPS

N HTD WINDOWS

NW	RTD	24.0	C
NC	RTD	25.1	C
NE	RTD	25.1	C

MISC. T & P

OUTSIDE AIR	9	C
BASEMENT P	0.00	"H20

W4 Graphics Window

Print

N VEL.	99.3	KNOTS
S VEL.	99.6	KNOTS
AVG V	99.5	KNOTS
AVG T	-10.1 C	
POWER	0.16	MWATT
ENTER TUNN	NO	
AIR SP	20.0	PG
WTRDPSP1	25.0	PD
TIMESET1	0.50	MIN
TIMEREM1	0.5	MIN
WTRDPSP2	75.0	PD
TIMESET2	20.00	MIN
TIMEREM2	20.0	MIN
MBUS	: :	ENABLED
SPUMP1	: :	ON
SPUMP2	: :	OFF
SPUMP3	: :	OFF
ALLOFF	: :	
SQSPRA	: :	OFF
SPRAY1	: :	OFF
SPRAY2	: :	OFF
FL HD1	-0.338	GPM
FL HD2	6.565	GPM
RELHUM	91.8	PCT
AIRTEM	-9.9	C
TDEW	-10.9	C
SPD A	161	RPM
FBR VIBS	0.07	IN/S
RBR VIBS	0.08	IN/S

B STOP MOTOR : :

2007

12:26:18 MENU **2001 - TUNNEL OVERVIEW** 12/13/06

CDELP 0.040 "WTR

0."OPEN MANUAL

S 150.0 RPM
V 150.0 RPM
A 161 RPM

TOP -10.0 C
MID -9.5 C
BOT -9.7 C

TOP -9.0 C
MID -9.2 C
BOT -8.9 C

CLOSED 3 DRIVE

CORNER C STOP NVENT 1 STOP SVENT 2 CORNER B

NEW HT EXCHGR

HE-DP 0.306

CLOSED 0."OPEN

EXDRDP 27 PSFD

151 RPM

0.245 DEL P
14.316 TOTAL
NORTH PITOT

1-01-00

ESCT AEX FLO 4.230 PPS
WDPF AEX FLO 4.06 "

P -0.52 DEG
S 0.0 DEG
0.0 RATE (40% MAX)
4 MANUAL

D CORNER A CORNER

UPPER LOWER

TOP -10.2 C
MID -10.2 C
BOT -10.3 C

SOUTH PITOT
14.337 TOTAL
0.246 DEL P

BALANCE CHAMBER PRESS.
14.136 PA

TOP -10.1 C
MID -10.4 C
BOT -10.6 C

DDELP -0.26 "WTR

W1 Graphics Window

Print

N VEL.	99.3	KNOTS
S VEL.	99.4	KNOTS
AVG V	99.3	KNOTS
AVG T	-10.2	C
POWER	0.24	MWATT
ENTER TUNN	NO	
AIR SP	20.0	PG
WTRDPSP1	25.0	PD
TIMESET1	0.50	MIN
TIMEREM1	0.5	MIN
WTRDPSP2	75.0	PD
TIMESET2	20.00	MIN
TIMEREM2	20.0	MIN
MBUS	: :	ENABLED
SPUMP1	: :	ON
SPUMP2	: :	OFF
SPUMP3	: :	OFF
ALLOFF	: :	
SQSPRA	: :	OFF
SPRAY1	: :	OFF
SPRAY2	: :	OFF
FL HD1	-0.338	GPM
FL HD2	6.582	GPM
RELHUM	91.1	PCT
AIRTEM	-9.9	C
TDEW	-11.1	C
SPD A	161	RPM
FBR VIBS	0.07	IN/S
RBR VIBS	0.07	IN/S

8 STOP MOTOR : :

2001

12:26:01 MENU

12/13/06

3000 - REFRIGERATION CONTROL

DIA 3000

STATUS

COMPRESSOR NO. :	01	02	03	04	08	09	10	11
CURRENT, AMPS:	188	195	187	0.0	0.0	0.0	0.0	-1
COND. PRES. PSIG:	83	84	82	-3	-2	-1	-3	-4
OIL PRES, PSIG:	37	30	28	38	39	40	39	35
COND WTR TEMP, F:	71	72	71	-96	69	73	23	---
AUXILIARY PMP :	OFF	OFF	OFF	ON	ON	ON	ON	ON
BYPASS :	CLOSE	CLOSE	CLOSE	CLOSE				
STATUS :	ON	ON	ON	OFF	OFF	OFF	OFF	OFF

7 P 9.8 PSIA
S 20.0 PSIA
O 100 %

SUCTION HEADER 9.8 PSIA
9.2 F

O 0.0%	O 1.1%	O 0.0%	O 0.0%	O 1.1%	O 0.0%
AUTO	AUTO	AUTO	AUTO	AUTO	AUTO
PRI: 02	PRI: 01	PRI: 03	PRI: 05	PRI: 01	PRI: 04

MODE: TEMP

8 P 24.9 PSIA
S 20.0 PSIA
O 1 %

FLASH COOLER 24.9 PSIA

LVL 0.0 INCH

PUMP #2 PRESS

P

30 PSIG

5 OFF

TOP -10 C

MID -10 C

BOT -10 C

STEAM 0 %

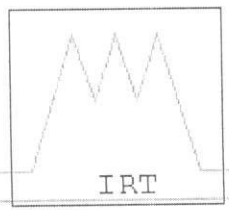

FAN RPM 151

AVG TEMP -10.1 C 13.76 F

SPRAY1 OFF
SPRAY2 OFF

PUMP #1 PRESS

P

33 PSIG

6 ON

MODE: REFRIG

:1: REFRIGERATION

3000

IRTX1 D053 RDG= 228 13-DEC-06 12:25:05 14.35 ESP= 0: 8:32 EU 2/ 12

RUN # 121306.00 TUNNEL/COOLANT FLOW DATA TEST= SWEPT WING

811S	-13.8	5IN	-128.4A	X11	-11.5
831S	-13.3	X51	-11.3	X12	-11.9
8IN	-13.5	X52	-11.7	X13	-11.3
X81	-10.4	X53	-10.0		
X82	-11.4	5EX	-11.9		
X83	-11.2				
8EX	-11.6	X41	-10.4		
811R	-10.5	X42	-10.4		
831R	-11.0	X43	-10.4		
7IN	-13.6	X31	-10.7		
X71	-11.0	X32	-10.7		
X72	-11.0	X33	-9.7		
X73	-10.4				
7EX	-11.7	211S	-11.0		
		231S	-12.8		
6IN	-128.4A	X21	-11.1		
X61	-10.7	X22	-9.7		
X62	-10.7	X23	-9.0		
X63	-10.3	211R	-10.3		
6EX	-11.4	231R	-10.4		

REFRIGERATION

PMP IN	13.25	PG
PMP OUT	35.33	PG
PMP DELP(C)	22.08	PD
FLOW1	684.6	GPM
FLOW2	1369.3	GPM
FLOWM1	91.8	GPM
FLOWM2	85.6	GPM
FCP	25.4	PA
FCT	-13.6	C
SP	9.8	PA
HXSP	21.5	PG
HXRT	10.6	PG
FLASHDP	0.1	PD
PUMPDP	17.9	PD
LWC	9999.000	G/M3
MVD	9999.000	UM

TUNNEL

DENSITY	0.0025	S/FT3
AVG VEL	100.	KTS
FAN SPEED	151.	RPM
FAN POWER	0.16	MWATT
AVG TOT D	-10.11	C
AVG TOT C		
PT AVG	14.326	
DP AVG	0.249	
PS AVG	14.078	
DRELH	93.04	%
DTEMP	-9.82	C
DDEWPNT	-10.73	C
CRELH	86.21	%
CTEMP	-9.09	C
CDEWPNT	-10.97	C
ICE PAR	-5.00A	V

SPRAY ON=1/OFF=0

M1 0.0 M2 0.0

PAIR	20.01	PG
DELP	74.96	PD

IRTX1 D053 RDG= 227 13-DEC-06 11:12:56 14.35 ESP= 0: 8:32 EU 2/ 12

RUN # 121306.00 TUNNEL/COOLANT FLOW DATA TEST= SWEPT WING

811S	-38.5	5IN	-128.2A	X11	-35.4					
831S	-37.6	X51	-34.5	X12	-35.8			TUNNEL		
8IN	-34.4	X52	-35.2	X13	-33.7			DENSITY	0.0025	S/FT3
X81	-34.1	X53	-32.3					AVG VEL	217.	KTS
X82	-32.7	5EX	-34.3	REFRIGERATION				FAN SPEED	297.	RPM
X83	-34.5			PMP IN	-2.47	PG		FAN POWER	1.36	MWATT
8EX	-33.0	X41	-32.3	PMP OUT	29.84	PG		AVG TOT D	-26.82	C
811R	-34.8	X42	-31.0	PMP DELP(C)	32.31	PD		AVG TOT C		
831R	-35.3	X43	-33.0	FLOW1	597.2	GPM		PT AVG	14.307	
				FLOW2	1194.3	GPM		DP AVG	1.222	
7IN	-36.6	X31	-34.3	FLOWM1	2.1	GPM		PS AVG	13.086	
X71	-34.0	X32	-34.0	FLOWM2	2.1	GPM		DRELH	74.66	%
X72	-34.0	X33	-30.9	FCP	8.0	PA		DTEMP	-27.05	C
X73	-31.3			FCT	-38.3	C		DDEWPNT	-30.19	C
7EX	-33.4	211S	-37.2	SP	7.9	PA		CRELH	72.44	%
		231S	-38.8	HXSP	13.0	PG		CTEMP	-23.97	C
6IN	-128.2A	X21	-32.2	HXRT	-6.5	PG		CDEWPNT	-27.53	C
X61	-33.6	X22	-30.2	FLASHDP	1.2	PD		ICE PAR	-5.00A	V
X62	-33.0	X23	-30.9	PUMPDP	33.4	PD		SPRAY ON=1/OFF=0		
X63	-31.6	211R	-35.3					M1 0.0 M2 0.0		
6EX	-32.9	231R	-34.6	LWC	9999.000	G/M3		PAIR	20.00	PG
				MVD	9999.000	UM		DELP	26.59	PD

RUN # 121306.00 TUNNEL FLOW DATA TEST = SWEPT WING

N. PITOT				FLOW			VELOCITY (KNOTS)
PTN	14.315		MACH NO	0.348			COMPRESSIBLE 211.88
DPN	1.149		REY NO	.231E+06			INCOMPRESS 214.75
PSN	13.165		DENSITY	0.00252	(SLUG/FT3)		INDICATED 221.26
			VISCOSITY	0.326E-06	(LBSEC/FT2)		
S. PITOT							
PTS	14.316		AVG TOT T	448.14	(R)		VELOCITY (FT/SEC)
DPS	1.154			-24.18	(C)		COMPRESSIBLE 357.62
PSS	13.163						INCOMPRESS 362.46
			AVG STAT T	437.53	(R)		INDICATED 373.45
N-S PITOT AVG				-30.08	(C)		
PT	14.316						
DP	1.152		TTABLE AOA	-0.6	(DEG)		VELOCITY (MPH)
PS	13.164						COMPRESSIBLE 243.83
			PBALREF	1.280	(PSIA)		INCOMPRESS 247.13
TREF1	71.33	F	RTIME	10.0	(MIN)		INDICATED 254.62
TREF2	71.01	F					VEL (M/SEC) 109.00
			PAIR	60.00	(PG)		
DDEWPNT	-26.49	C	DELP	74.96	(PD)		SPRAY ON=1/OFF=0
DRELH	81.84	%	LWC	1.684	(G/M3)		MAN1(MODS) 0.0
DTEMP	-24.27	C	MVD	25.588	(UM)		MAN2(STDS) 1.0

##

IRTX1 D053 RDG= 228 13-DEC-06 11:30:40 14.35 ESP= 0: 8:32 EU 2/ 12

RUN # 121306.00 TUNNEL/COOLANT FLOW DATA TEST= SWEPT WING

811S	-37.5	5IN	-128.3A	X11	-34.2					
831S	-36.6	X51	-33.0	X12	-34.5			TUNNEL		
8IN	-34.4	X52	-33.8	X13	-33.4			DENSITY	0.0025	S/FT3
X81	-32.4	X53	-30.9					AVG VEL	213.	KTS
X82	-31.0	5EX	-33.0	REFRIGERATION				FAN SPEED	316.	RPM
X83	-33.5			PMP IN		-2.09	PG	FAN POWER	1.55	MWATT
8EX	-32.0	X41	-30.5	PMP OUT		34.95	PG	AVG TOT D	-24.23	C
811R	-33.8	X42	-29.5	PMP DELP(C)		37.04	PD	AVG TOT C		
831R	-34.6	X43	-32.3	FLOW1		550.8	GPM	PT AVG	14.312	
				FLOW2		1101.6	GPM	DP AVG	1.165	
7IN	-35.7	X31	-32.2	FLOWM1		2.1	GPM	PS AVG	13.147	
X71	-32.9	X32	-32.6	FLOWM2		2.5	GPM	DRELH	81.10	%
X72	-33.6	X33	-29.9	FCP		8.4	PA	DTEMP	-24.33	C
X73	-31.2			FCT		-38.3	C	DDEWPNT	-26.64	C
7EX	-32.2	211S	-37.9	SP		8.1	PA	CRELH	77.93	%
		231S	-37.9	HXSP		16.4	PG	CTEMP	-20.81	C
6IN	-128.3A	X21	-31.2	HXRT		-6.2	PG	CDEWPNT	-23.65	C
X61	-32.6	X22	-29.5	FLASHDP		1.8	PD	ICE PAR	-5.00A	V
X62	-29.5	X23	-31.2	PUMPDP		37.7	PD	SPRAY ON=1/OFF=0		
X63	-31.6	211R	-33.9					M1 0.0 M2	0.0	
6EX	-31.5	231R	-33.8	LWC		9999.000	G/M3	PAIR	60.00	PG
				MVD		9999.000	UM	DELP	74.96	PD

IRTX1 D053 RDG= 228 13-DEC-06 12:12:24 14.35 ESP= 0: 8:32 EU 2/ 12

RUN # 121306.00 TUNNEL/COOLANT FLOW DATA TEST= SWEPT WING

811S	-15.5	5IN	-128.4A	X11	-15.7					
831S	-15.0	X51	-14.1	X12	-15.7			TUNNEL		
8IN	-15.5	X52	-14.7	X13	-14.7			DENSITY	0.0024	S/FT3
X81	-13.1	X53	-12.3					AVG VEL	219.	KTS
X82	-13.4	5EX	-12.4	REFRIGERATION				FAN SPEED	320.	RPM
X83	-13.6			PMP IN	10.55	PG		FAN POWER	1.55	MWATT
8EX	-12.0	X41	-13.1	PMP OUT	37.70	PG		AVG TOT D	-9.83	C
811R	-14.8	X42	-12.7	PMP DELP(C)	27.15	PD		AVG TOT C		
831R	-14.7	X43	-13.0	FLOW1	643.2	GPM		PT AVG	14.307	
				FLOW2	1286.4	GPM		DP AVG	1.160	
7IN	-15.9	X31	-14.2	FLOWM1	2.1	GPM		PS AVG	13.148	
X71	-13.9	X32	-13.9	FLOWM2	155.9	GPM		DRELH	94.04	%
X72	-14.2	X33	-12.6	FCP	22.4	PA		DTEMP	-9.94	C
X73	-13.0			FCT	-16.7	C		DDEWPNT	-10.72	C
7EX	-12.0	211S	-15.0	SP	9.8	PA		CRELH	83.86	%
		231S	-15.5	HXSP	24.6	PG		CTEMP	-7.80	C
6IN	-128.4A	X21	-14.0	HXRT	7.7	PG		CDEWPNT	-10.05	C
X61	-12.9	X22	-12.3	FLASHDP	0.5	PD		ICE PAR	-5.00A	V
X62	-12.6	X23	-12.6	PUMPDP	27.6	PD		SPRAY ON=1/OFF=0		
X63	-13.2	211R	-14.7					M1 0.0 M2 0.0		
6EX	-11.5	231R	-14.5	LWC	9999.000	G/M3		PAIR	59.99	PG
				MVD	9999.000	UM		DELP	74.96	PD

IRTX1 D053 RDG= 228 13-DEC-06 12:18:45 14.35 ESP= 0: 8:32 EU 2/ 12

RUN # 121306.00 TUNNEL/COOLANT FLOW DATA TEST= SWEPT WING

811S	-15.9	5IN	-128.4A	X11	-13.8					
831S	-15.3	X51	-12.9	X12	-13.8			TUNNEL		
8IN	-14.8	X52	-13.3	X13	-13.1			DENSITY	0.0025	S/FT3
X81	-11.9	X53	-11.3					AVG VEL	150.	KTS
X82	-11.9	5EX	-12.0	REFRIGERATION				FAN SPEED	224.	RPM
X83	-12.1			PMP IN	11.67	PG		FAN POWER	0.55	MWATT
8EX	-11.7	X41	-11.9	PMP OUT	33.92	PG		AVG TOT D	-10.58	C
811R	-13.0	X42	-11.5	PMP DELP(C)	22.26	PD		AVG TOT C		
831R	-12.9	X43	-11.6	FLOW1	683.3	GPM		PT AVG	14.317	
				FLOW2	1366.5	GPM		DP AVG	0.555	
7IN	-15.0	X31	-12.3	FLOWM1	103.2	GPM		PS AVG	13.762	
X71	-13.0	X32	-12.6	FLOWM2	92.6	GPM		DRELH	93.14	%
X72	-12.6	X33	-11.7	FCP	23.7	PA		DTEMP	-10.53	C
X73	-11.5			FCT	-15.3	C		DDEWPNT	-11.42	C
7EX	-11.7	211S	-14.5	SP	9.8	PA		CRELH	83.98	%
		231S	-15.2	HXSP	21.4	PG		CTEMP	-9.18	C
6IN	-128.4A	X21	-12.8	HXRT	8.9	PG		CDEWPNT	-11.38	C
X61	-11.7	X22	-11.3	FLASHDP	0.1	PD		ICE PAR	-5.00A	V
X62	-11.3	X23	-11.0	PUMPDP	22.2	PD		SPRAY ON=1/OFF=0		
X63	-11.3	211R	-12.0					M1 0.0 M2	0.0	
6EX	-11.5	231R	-12.6	LWC	9999.000	G/M3		PAIR	19.99	PG
				MVD	9999.000	UM		DELP	74.96	PD

11:13:46 MENU

12/13/06

3000 - REFRIGERATION CONTROL

DIA 3000

STATUS

COMPRESSOR NO. :	01	02	03	04	08	09	10	11
CURRENT, AMPS:	183	187	188	165	167	191	192	190
COND. PRES. PSIG:	82	82	82	79	70	85	86	84
OIL PRES, PSIG:	37	28	27	33	32	45	37	38
COND WTR TEMP, F:	72	73	72	72	73	79	46	---
AUXILIARY PMP :	OFF	OFF	OFF	OFF	OFF	OFF	OFF	OFF
BYPASS :	CLOSE	CLOSE	CLOSE	CLOSE				
STATUS :	ON	ON	ON	ON	ON	ON	ON	ON

7 P 7.9 PSIA
S 20.0 PSIA
O 100 %
MANU

SUCTION HEADER 7.9 PSIA
-35.1 F

O 85% AUTO PRI: 02

O 100% AUTO PRI: 01

O 90% AUTO PRI: 03

O 80% AUTO PRI: 05

O 100% AUTO PRI: 01

O 85% AUTO PRI: 04

MODE: TEMP

8 P 8.0 PSIA
S 20.0 PSIA
O 100 %
MANU

FLASH COOLER 8.0 PSIA

LVL 0.2 INCH

PUMP #2 PRESS

P

27 PSIG

5 OFF

TOP -26 C

MID -27 C

BOT -26 C

STEAM 0 %

IRT

FAN RPM 297

AVG TEMP -26.8 C -16.2 F

SPRAY1 OFF
SPRAY2 OFF

PUMP #1 PRESS

P

27 PSIG

6 ON

MODE: REFRIG

:1: REFRIGERATION

3000

11:14:01 MENU
12/13/00

3017 - DETAIL STATUS

	1	2	3	4	8	9	10	11
MTR CURR	183 AMP	187 AMP	188 AMP	163 AMP	187 AMP	192 AMP	192 AMP	189 AMP
MTR PWR	0.7 MW	0.7 MW	0.7 MW	0.6 MW	0.7 MW	0.7 MW	0.3 MW	0.7 MW
CONDSR PRES	83 PSIG	81 PSIG	82 PSIG	79 PSIG	76 PSIG	85 PSIG	88 PSIG	84 PSIG
AUX OIL PMP	OFF	OFF	OFF	OFF	OFF	OFF	OFF	OFF
LUBE OIL PRESS	37 PSIG	22 PSIG	27 PSIG	33 PSIG	31 PSIG	45 PSIG	37 PSIG	38 PSIG
HGBYPS V21	CLSD/ [redacted]	CLSD/ [redacted]	CLSD/ [redacted]	CLSD [redacted]				
HG ISOL VLV	OPEN	OPEN	OPEN	OPEN				
ECONOMIZER V18	CLSD/ [redacted]	CLSD/ [redacted]	CLSD/ [redacted]	CLSD/ [redacted]	CLSD/ [redacted]	CLSD/ [redacted]	CLSD/ [redacted]	CLSD/ [redacted]
COND PURGE VLV	OPEN/ [redacted]	OPEN/ [redacted]	OPEN/ [redacted]	OPEN/ [redacted]	OPEN/ [redacted]	OPEN/ [redacted]	OPEN/ [redacted]	OPEN/ [redacted]
ECONO ISOL VLV	OPEN	OPEN	OPEN	OPEN	OPEN	OPEN	OPEN	OPEN
COMP INLT VLV	OPEN	OPEN	OPEN	OPEN	OPEN	OPEN	OPEN	OPEN
TEMPS:								
REAR BRG	170 F	158 F	158 F	141 F	148 F	153 F	178 F	148 F
SEAL BRG	172 F	176 F	159 F	167 F	172 F	156 F	162 F	172 F
THRUST BRG	170 F	180 F	160 F	172 F	165 F	171 F	162 F	166 F
LUBE OIL	156 F	153 F	144 F	160 F	136 F	153 F	162 F	150 F
MTR GEAR	135 F	130 F	139 F	138 F	136 F	121 F	166 F	135 F
PINION GEAR	121 F	124 F	124 F	123 F	137 F	123 F	139 F	129 F
GEAR BOX OIL	131 F	138 F	137 F	135 F	141 F	133 F	134 F	135 F
MTR BRG INB	148 F	168 F	171 F	180 F	162 F	162 F	165 F	157 F
MTR BRG OUTB	156 F	184 F	165 F	169 F	171 F	165 F	169 F	171 F
COND CTWR	71 F	73 F	72 F	72 F	73 F	79 F	46 F	--- F
COND WTR FLW SW	FLOW	FLOW	FLOW	FLOW	FLOW	FLOW	FLOW	FLOW
INSPEC DATE	04/98	02/97	03/98	02/98	02/97	07/99	08/99	12/99
COMP STARTS TTL	MINS	MINS	MINS	MINS	MINS	MINS	MINS	MINS
COMP RUN TTL	531 MINS	114 MINS	119 MINS	79 MINS	108 MINS	104 MINS	102 MINS	0 MINS

11:14:07 MENU **2007 - TUNNEL TEMPERATURE PROFILES** 12/13/06

HTD TURNING VANES

A CORNER

TOP	-25.3	C
MID	-25.7	C
BOT	-25.7	C

B CORNER

TOP	-25.1	C
MID	-24.8	C
BOT	-24.6	C

C CORNER

C11	-22.9	C
C12	-23.8	C
C21	-22.8	C
C22	-23.9	C
C31	-23.3	C
C32	-23.9	C
C41	-24.0	C
C42	-23.9	C
C51	-23.2	C
C52	-23.4	C
C61	-23.0	C
C62	-23.4	C
C71	-23.4	C
C72	-23.4	C
C81	-23.3	C
C82	-23.2	C

S HTD WINDOWS

SW	RTD	25.0	C
SWC	RTD	25.0	C
SEC	RTD	25.0	C
SE	RTD	25.0	C

HTCH RTD 25.0

D CORNER

D11	-26.7	C
D12	-26.7	C
D13	-27.1	C
D23	-26.7	C
D22	-26.8	C
D21	-26.8	C
D31	-27.0	C
D32	-26.9	C
D33	-27.4	C
D43	-26.8	C
D42	-26.8	C
D41	-27.0	C
D51	-27.0	C
D52	-26.9	C
D53	-27.1	C
D63	-26.7	C
D62	-26.7	C
D61	-26.8	C
D71	-26.7	C
D72	-26.5	C
D73	-26.5	C
D83	-26.6	C
D82	-26.5	C
D81	-26.9	C

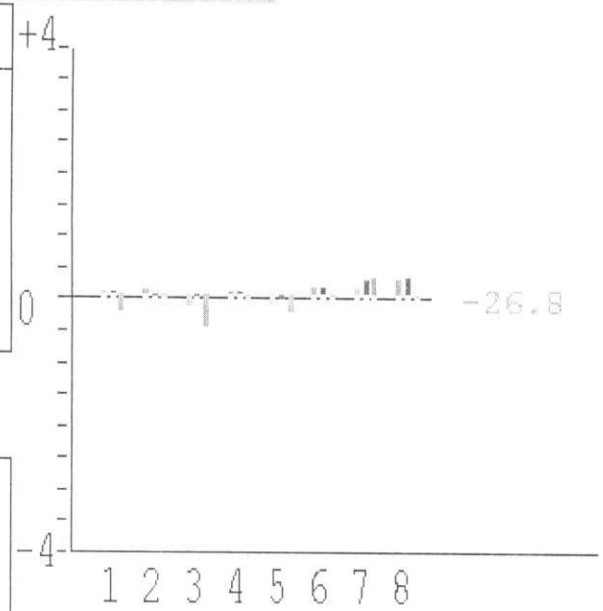

DTEMPS

N HTD WINDOWS

NW	RTD	24.0	C
NC	RTD	25.0	C
NE	RTD	25.0	C

MISC. T & P

OUTSIDE AIR	8	C
BASEMENT P	0.00	"H20

W1 Graphics Window

Print

N VEL.	217.5	KNOTS
S VEL.	218.2	KNOTS
AVG V	217.8	KNOTS
AVG T	-26.8 C	
POWER	1.37	MWATT
ENTER TUNN	NO	
AIR SP	20.0	PG
WTRDPSP1	25.0	PD
TIMESET1	0.50	MIN
TIMEREM1	0.5	MIN
WTRDPSP2	25.0	PD
TIMESET2	10.00	MIN
TIMEREM2	10.0	MIN
MBUS	: :	ENABLED
SPUMP1	: :	ON
SPUMP2	: :	OFF
SPUMP3	: :	OFF
ALLOFF	: :	
SQSPRA	: :	OFF
SPRAY1	: :	OFF
SPRAY2	: :	OFF
FL HD1	-0.338	GPM
FL HD2	3.822	GPM
RELHUM	74.5	PCT
AIRTEM	-27.0	C
TDEW	-30.2	C
SPD A	315	RPM
FBR VIBS	0.10	IN/S
RBR VIBS	0.13	IN/S

B STOP MOTOR : :

2007

11:24:17 MENU **2001 - TUNNEL OVERVIEW** 12/13/06

CDELP 0.210 "WTR

0."OPEN

MANUAL

S 285.0 RPM
V 300.6 RPM
A 315 RPM

TOP -23.4 C
MID -23.8 C
BOT -23.2 C

CLOSED

3 DRIVE

TOP -25.0 C
MID -24.8 C
BOT -24.6 C

CORNER C

STOP NVENT 1

STOP SVENT 2

CORNER B

NEW HT EXCHGR

CLOSED

0. "OPEN

HE-DP 1.227

EXDRDP 139 PSFD

297 RPM

1.214 DEL P
14.296 TOTAL
NORTH PITOT

1-01-00

ESCT AEX FLO 6.709 PPS
WDPF AEX FLO 6.42 "

+

P -0.52 DEG
S 0.0 DEG
C 0.0 RATE (40% MAX)

4

MANUAL

–

D CORNER

A CORNER

UPPER

LOWER

TOP -26.7 C
MID -26.9 C
BOT -26.5 C

SOUTH PITOT
14.318 TOTAL
1.220 DEL P

BALANCE CHAMBER PRESS.
13.369 PA

TOP -25.4 C
MID -25.7 C
BOT -25.7 C

DDELP -0.99 "WTR

W1 Graphics Window

Print

N VEL.	216.8	KNOTS
S VEL.	217.5	KNOTS
AVG V	217.2	KNOTS
AVG T	-26.8	C
POWER	1.37	MWATT
ENTER TUNN	NO	
AIR SP	20.0	PG
WTRDPSP1	25.0	PD
TIMESET1	0.50	MIN
TIMEREM1	0.5	MIN
WTRDPSP2	25.0	PD
TIMESET2	10.00	MIN
TIMEREM2	10.0	MIN
MBUS	: :	ENABLED
SPUMP1	: :	ON
SPUMP2	: :	OFF
SPUMP3	: :	OFF
ALLOFF	: :	
SQSPRA	: :	OFF
SPRAY1	: :	OFF
SPRAY2	: :	OFF
FL HD1	-0.338	GPM
FL HD2	3.822	GPM
RELHUM	74.4	PCT
AIRTEM	-27.1	C
TDEW	-30.2	C
SPD A	315	RPM
FBR VIBS	0.10	IN/S
RBR VIBS	0.08	IN/S

8 STOP MOTOR : :

2001

11:31:36 MENU **2007 - TUNNEL TEMPERATURE PROFILES** 12/13/06

HTD TURNING VANES

A CORNER

TOP	-23.1	C
MID	-23.1	C
BOT	-23.2	C

B CORNER

TOP	-22.6	C
MID	-22.4	C
BOT	-21.9	C

C CORNER

C11	-20.3	C
C12	-20.7	C
C21	-19.9	C
C22	-21.0	C
C31	-20.6	C
C32	-21.0	C
C41	-20.9	C
C42	-20.9	C
C51	-20.5	C
C52	-20.3	C
C61	-20.1	C
C62	-20.3	C
C71	-20.5	C
C72	-20.5	C
C81	-20.2	C
C82	-20.3	C

S HTD WINDOWS

SW	RTD	25.0	C
SWC	RTD	25.0	C
SEC	RTD	25.0	C
SE	RTD	25.0	C

HTCH RTD 25.1

D CORNER

D11	-24.6	C
D12	-24.2	C
D13	-24.7	C
D23	-24.1	C
D22	-24.2	C
D21	-24.8	C
D31	-24.7	C
D32	-24.2	C
D33	-24.8	C
D43	-23.9	C
D42	-24.0	C
D41	-24.6	C
D51	-24.4	C
D52	-24.2	C
D53	-24.6	C
D63	-23.9	C
D62	-24.0	C
D61	-24.4	C
D71	-24.3	C
D72	-23.8	C
D73	-23.9	C
D83	-23.9	C
D82	-23.9	C
D81	-24.7	C

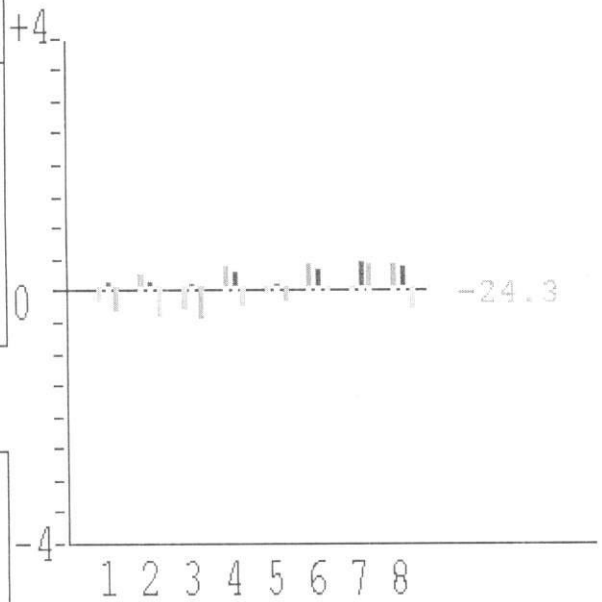

DTEMPS

N HTD WINDOWS

NW	RTD	24.0	C
NC	RTD	25.0	C
NE	RTD	25.0	C

MISC. T & P

OUTSIDE AIR	7	C
BASEMENT P	0.00	"H2O

W4 Graphics Window

Print

N VEL.	212.5	KNOTS
S VEL.	212.5	KNOTS
AVG V	212.5	KNOTS
AVG T	-24.3	C
POWER	1.55	MWATT
ENTER TUNN	NO	
AIR SP	60.0	PG
WTRDPSP1	25.0	PD
TIMESET1	0.50	MIN
TIMEREM1	0.5	MIN
WTRDPSP2	75.0	PD
TIMESET2	20.00	MIN
TIMEREM2	9.0	MIN
MBUS	: :	ENABLED
SPUMP1	: :	ON
SPUMP2	: :	OFF
SPUMP3	: :	OFF
ALLOFF	: :	
SQSPRA	: :	OFF
SPRAY1	: :	OFF
SPRAY2	: :	OFF
FL HD1	-0.338	GPM
FL HD2	6.730	GPM
RELHUM	80.5	PCT
AIRTEM	-24.4	C
TDEW	-26.7	C
SPD A	333	RPM
FBR VIBS	0.07	IN/S
RBR VIBS	0.13	IN/S

7000

8 STOP MOTOR : :

2007

11:31:49 MENU

2001 - TUNNEL OVERVIEW

12/13/06

CDELP 0.299 "WTR

0."OPEN

MANUAL

S 285.0 RPM
V 318.8 RPM
A 333 RPM

TOP -20.9 C
MID -21.0 C
BOT -20.6 C

CLOSED

3 DRIVE

TOP -22.8 C
MID -22.5 C
BOT -22.0 C

CORNER C

STOP NVENT 1

STOP SVENT 2

CORNER B

NEW HT EXCHGR

HE-DP 1.140

CLOSED

0. "OPEN

EXDRDP 135 PSFD

316 RPM

1.158 DEL P
14.296 TOTAL
NORTH PITOT

1-01-00

ESCT AEX FLO 6.713 PPS
WDPF AEX FLO 6.44 "

+

P -0.52 DEG
S 0.0 DEG
C 0.0 RATE (40% MAX)

4

MANUAL

D CORNER

A CORNER

UPPER

LOWER

TOP -24.3 C
MID -24.3 C
BOT -24.0 C

SOUTH PITOT
14.318 TOTAL
1.172 DEL P

BALANCE CHAMBER PRESS.
13.398 PA

TOP -23.3 C
MID -23.3 C
BOT -23.4 C

DDELP -0.82 "WTR

W4 Graphics Window

Print

N VEL.	212.8	KNOTS
S VEL.	212.9	KNOTS
AVG V	213.1	KNOTS
AVG T	-24.4 C	
POWER	1.55	MWATT
ENTER TUNN	NO	
AIR SP	60.0	PG
WTRDPSP1	25.0	PD
TIMESET1	0.50	MIN
TIMEREM1	0.5	MIN
WTRDPSP2	75.0	PD
TIMESET2	20.00	MIN
TIMEREM2	8.8	MIN
MBUS	: :	ENABLED
SPUMP1	: :	ON
SPUMP2	: :	OFF
SPUMP3	: :	OFF
ALLOFF	: :	
SQSPRA	: :	OFF
SPRAY1	: :	OFF
SPRAY2	: :	OFF
FL HD1	-0.338	GPM
FL HD2	6.681	GPM
RELHUM	79.9	PCT
AIRTEM	-24.4	C
TDEW	-26.8	C
SPD A	333	RPM
FBR VIBS	0.14	IN/S
RBR VIBS	0.09	IN/S

8 STOP MOTOR : :

2001

MENU

3000 - REFRIGERATION CONTROL

DIA 3000

STATUS

COMPRESSOR NO. :	01	02	03	04	08	09	10	11
CURRENT, AMPS:	189	192	194	174	193	198	201	195
COND. PRES. PSIG:	84	83	84	82	72	67	91	88
OIL PRES, PSIG:	37	29	27	33	32	45	38	39
COND WTR TEMP, F:	72	74	73	73	74	80	48	---
AUXILIARY PMP :	OFF	OFF	OFF	OFF	OFF	OFF	OFF	OFF
BYPASS :	CLOSE	CLOSE	CLOSE	CLOSE				
STATUS :	ON	ON	ON	ON	ON	ON	ON	ON

7 P 8.3 PSIA
S 20.0 PSIA
O 100 %

SUCTION HEADER 8.3 PSIA
-33.7 F

O 95%	O 100%	O 90%	O 80%	O 100%	O 85%
AUTO	AUTO	AUTO	AUTO	AUTO	AUTO
PRI: 02	PRI: 01	PRI: 03	PRI: 05	PRI: 01	PRI: 04

MODE: TEMP

8 P 8.1 PSIA
S 20.0 PSIA
O 100 %

FLASH COOLER 8.1 PSIA

LVL 0.3 INCH

PUMP #2 PRESS

P

32 PSIG

5 OFF

TOP -24 C

MID -25 C

BOT -24 C

STEAM 0 %

IRT

FAN RPM 315

AVG TEMP -24.4 C -11.9 F

SPRAY1 OFF
SPRAY2 OFF

PUMP #1 PRESS

P

32 PSIG

6 ON

MODE: REFRIG

:1: REFRIGERATION

11:32:16
12/18/06

MENU

3017 - DETAIL STATUS

	1	2	3	4	8	9	10	11
MTR CURR	188 AMP	192 AMP	193 AMP	174 AMP	191 AMP	197 AMP	200 AMP	194 AMP
MTR PWR	0.7 MW	0.7 MW	0.8 MW	0.6 MW	0.7 MW	0.7 MW	0.3 MW	0.7 MW
CONDSR PRES	84 PSIG	83 PSIG	84 PSIG	81 PSIG	71 PSIG	87 PSIG	90 PSIG	86 PSIG
AUX OIL PMP	OFF	OFF	OFF	OFF	OFF	OFF	OFF	OFF
LUBE OIL PRESS	37 PSIG	29 PSIG	27 PSIG	33 PSIG	22 PSIG	45 PSIG	38 PSIG	39 PSIG
HGBYPS V21	CLSD/ [redacted]	CLSD/ [redacted]	CLSD/ [redacted]	CLSD [redacted]				
HG ISOL VLV	OPEN	OPEN	OPEN	OPEN				
ECONOMIZER V18	CLSD/ [redacted]	CLSD/ [redacted]	CLSD/ [redacted]	CLSD/ [redacted]	CLSD/ [redacted]	CLSD/ [redacted]	CLSD/ [redacted]	CLSD/ [redacted]
COND PURGE VLV	OPEN/ [redacted]	OPEN/ [redacted]	OPEN/ [redacted]	OPEN/ [redacted]	OPEN/ [redacted]	OPEN/ [redacted]	OPEN/ [redacted]	OPEN/ [redacted]
ECONO ISOL VLV	OPEN	OPEN	OPEN	OPEN	OPEN	OPEN	OPEN	OPEN
COMP INLT VLV	OPEN	OPEN	OPEN	OPEN	OPEN	OPEN	OPEN	OPEN
TEMPS:								
REAR BRG	172 F	159 F	159 F	142 F	150 F	152 F	179 F	149 F
SEAL BRG	173 F	177 F	160 F	168 F	174 F	156 F	163 F	173 F
THRUST BRG	172 F	182 F	161 F	174 F	166 F	170 F	161 F	166 F
LUBE OIL	158 F	153 F	145 F	160 F	136 F	153 F	162 F	150 F
MTR GEAR	136 F	130 F	140 F	139 F	137 F	127 F	166 F	135 F
PINION GEAR	122 F	125 F	124 F	124 F	137 F	124 F	139 F	130 F
GEAR BOX OIL	132 F	136 F	138 F	136 F	141 F	134 F	134 F	135 F
MTR BRG INB	151 F	169 F	172 F	182 F	163 F	163 F	167 F	158 F
MTR BRG OUTB	158 F	186 F	166 F	172 F	173 F	166 F	170 F	173 F
COND CTWR	72 F	74 F	73 F	73 F	74 F	80 F	49 F	--- F
COND WTR FLW SW	FLOW	FLOW	FLOW	FLOW	FLOW	FLOW	FLOW	FLOW
INSPEC DATE	04/98	02/97	03/98	02/98	02/97	07/99	08/99	12/99
COMP STARTS TTL	MINS	MINS	MINS	MINS	MINS	MINS	MINS	MINS
COMP RUN TTL	531 MINS	132 MINS	128 MINS	97 MINS	127 MINS	122 MINS	120 MINS	0 MINS

12:13:13 MENU **3000 - REFRIGERATION CONTROL** DIA 3000

12/13/06

STATUS

COMPRESSOR NO. :	01	02	03	04	08	09	10	11
CURRENT, AMPS:	196	211	192	-0.	-0.	-0.	-0.	-0.
COND. PRES. PSIG:	85	86	83	-3	-2	-2	-2	-4
OIL PRES, PSIG:	38	30	28	37	39	39	38	35
COND WTR TEMP, F:	70	71	70	67	67	72	15	---
AUXILIARY PMP :	OFF	OFF	OFF	ON	ON	ON	ON	ON
BYPASS :	CLOSE	CLOSE	CLOSE	CLOSE				
STATUS :	ON	ON	ON	OFF	OFF	OFF	OFF	OFF
	: :	: :	: :	: :	: :	: :	: :	: :

7 P 9.7 PSIA
S 20.0 PSIA
O 100 %
MENU

SUCTION HEADER 9.7 PSIA
3.8 F

O 0.0%	O 4.9%	O 0.0%	O 0.0%	O 4.9%	O 0.0%
AUTO	AUTO	AUTO	AUTO	AUTO	AUTO
PRI: 02	PRI: 01	PRI: 03	PRI: 05	PRI: 01	PRI: 04

MODE: TEMP

8 P 22.3 PSIA
S 20.0 PSIA
O 5 %
MENU

FLASH COOLER 22.3 PSIA

LVL 0.1 INCH

PUMP #2 PRESS (P) 35 PSIG

5 OFF

TOP -9.9 C

MID -10 C

BOT -9.8 C

STEAM 0 %

IRT

FAN RPM 320

AVG TEMP -9.8 C 14.29 F

SPRAY1 OFF
SPRAY2 OFF

PUMP #1 PRESS (P) 35 PSIG

6 ON

MODE: REFRIG

1: REFRIGERATION

12:12:25 MENU
12/13/06

3017 - DETAIL STATUS

	1	2	3	4	8	9	10	11
MTR CURR	197 AMP	211 AMP	193 AMP	-0. AMP	-0. AMP	-0. AMP	0.0 AMP	-0. AMP
MTR PWR	0.7 MW	0.8 MW	0.8 MW	0.0 MW	--- MW	0.0 MW	0.0 MW	0.0 MW
CONDSR PRES	84 PSIG	86 PSIG	82 PSIG	-4 PSIG	-2 PSIG	-1 PSIG	-3 PSIG	-4 PSIG
AUX OIL PMP	OFF	OFF	OFF	ON	ON	ON	ON	ON
LUBE OIL PRESS	38 PSIG	30 PSIG	28 PSIG	37 PSIG	39 PSIG	39 PSIG	38 PSIG	35 PSIG
HGBYPS V21	CLSD/ [redacted]	CLSD/ [redacted]	CLSD/ [redacted]	CLSD [redacted]				
HG ISOL VLV	OPEN	OPEN	OPEN	OPEN				
ECONOMIZER V18	CLSD/ [redacted]	CLSD/ [redacted]	CLSD/ [redacted]	CLSD/ [redacted]	CLSD/ [redacted]	CLSD/ [redacted]	CLSD/ [redacted]	CLSD/ [redacted]
COND PURGE VLV	OPEN/ [redacted]	OPEN/ [redacted]	OPEN/ [redacted]	OPEN/ [redacted]	OPEN/ [redacted]	OPEN/ [redacted]	OPEN/ [redacted]	OPEN/ [redacted]
ECONO ISOL VLV	OPEN	OPEN	OPEN	OPEN	OPEN	OPEN	OPEN	OPEN
COMP INLT VLV	OPEN	OPEN	OPEN	OPEN	OPEN	OPEN	OPEN	OPEN
TEMPS:								
REAR BRG	167 F	154 F	158 F	116 F	115 F	112 F	116 F	122 F
SEAL BRG	170 F	173 F	163 F	128 F	143 F	126 F	127 F	145 F
THRUST BRG	166 F	175 F	163 F	121 F	117 F	117 F	117 F	125 F
LUBE OIL	158 F	153 F	144 F	142 F	135 F	140 F	144 F	137 F
MTR GEAR	136 F	129 F	140 F	135 F	139 F	128 F	131 F	131 F
PINION GEAR	121 F	124 F	123 F	130 F	140 F	129 F	129 F	132 F
GEAR BOX OIL	132 F	138 F	137 F	119 F	134 F	113 F	118 F	118 F
MTR BRG INB	153 F	170 F	172 F	135 F	136 F	132 F	132 F	125 F
MTR BRG OUTB	159 F	187 F	187 F	142 F	153 F	142 F	139 F	141 F
COND CTWR	70 F	71 F	70 F	68 F	67 F	72 F	16 F	--- F
COND WTR FLW SW	FLOW	FLOW	FLOW	FLOW	FLOW	FLOW	FLOW	FLOW
INSPEC DATE	04/98	02/97	03/98	02/98	02/97	07/99	08/99	12/99
COMP STARTS TTL	MINS	MINS	MINS	MINS	MINS	MINS	MINS	MINS
COMP RUN TTL	531 MINS	173 MINS	169 MINS	98 MINS	141 MINS	131 MINS	125 MINS	0 MINS

12:13:34 MENU **2007 - TUNNEL TEMPERATURE PROFILES** 12/13/06

HTD TURNING VANES

A CORNER

TOP	-10.2	C
MID	-10.2	C
BOT	-10.4	C

B CORNER

TOP	-10.0	C
MID	-9.3	C
BOT	-9.4	C

C CORNER

C11	-7.3	C
C12	-7.6	C
C21	-7.2	C
C22	-7.8	C
C31	-7.3	C
C32	-7.7	C
C41	-7.7	C
C42	-7.8	C
C51	-7.1	C
C52	-7.1	C
C61	-6.8	C
C62	-7.6	C
C71	-7.7	C
C72	-7.2	C
C81	-7.3	C
C82	-7.1	C

S HTD WINDOWS

SW	RTD	25.0	C
SWC	RTD	25.0	C
SEC	RTD	25.0	C
SE	RTD	25.0	C

HTCH RTD 25.0

D CORNER

D11	-10.0	C
D12	-9.9	C
D13	-10.1	C
D23	-9.7	C
D22	-9.8	C
D21	-9.6	C
D31	-9.9	C
D32	-9.9	C
D33	-10.2	C
D43	-9.6	C
D42	-9.7	C
D41	-9.7	C
D51	-9.9	C
D52	-9.9	C
D53	-10.0	C
D63	-9.6	C
D62	-9.7	C
D61	-9.7	C
D71	-9.8	C
D72	-9.8	C
D73	-9.8	C
D83	-9.8	C
D82	-9.8	C
D81	-9.7	C

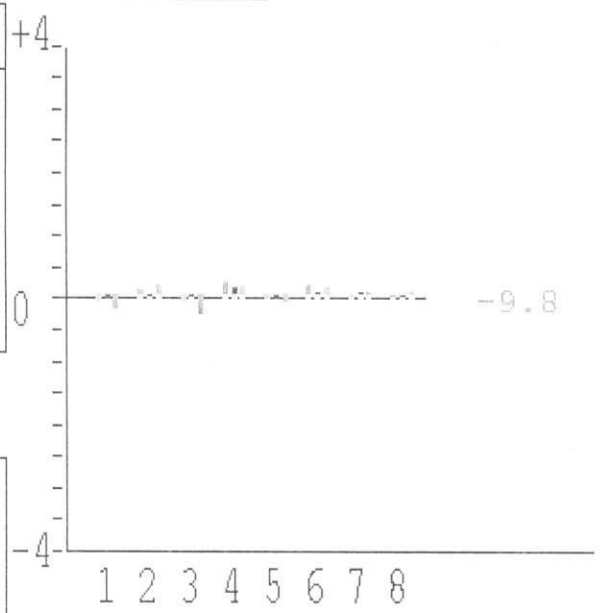

DTEMPS

N HTD WINDOWS

NW	RTD	24.0	C
NC	RTD	25.0	C
NE	RTD	25.0	C

MISC. T & P

OUTSIDE AIR	8	C
BASEMENT P	0.00	"H20

W4 Graphics Window

Print

N VEL.	217.8	KNOTS
S VEL.	218.3	KNOTS
AVG V	218.0	KNOTS
AVG T	-9.8	C
POWER	1.55	MWATT
ENTER TUNN	NO	
AIR SP	60.0	PG
WTRDPSP1	25.0	PD
TIMESET1	0.50	MIN
TIMEREM1	0.5	MIN
WTRDPSP2	75.0	PD
TIMESET2	20.00	MIN
TIMEREM2	20.0	MIN
MBUS	: :	ENABLED
SPUMP1	: :	ON
SPUMP2	: :	OFF
SPUMP3	: :	OFF
ALLOFF	: :	
SQSPRA	: :	OFF
SPRAY1	: :	OFF
SPRAY2	: :	OFF
FL HD1	-0.338	GPM
FL HD2	6.714	GPM
RELHUM	94.0	PCT
AIRTEM	-9.9	C
TDEW	-10.7	C
SPD A	338	RPM
FBR VIBS	0.11	IN/S
RBR VIBS	0.13	IN/S

STOP MOTOR : :

2007

12:13:46 MENU **2007 - TUNNEL TEMPERATURE PROFILES** 12/13/06

HTD TURNING VANES

A CORNER

TOP	-10.2	C
MID	-10.2	C
BOT	-10.4	C

B CORNER

TOP	-10.2	C
MID	-9.4	C
BOT	-9.3	C

C CORNER

C11	-7.3	C
C12	-7.6	C
C21	-7.1	C
C22	-8.0	C
C31	-7.2	C
C32	-7.6	C
C41	-7.9	C
C42	-7.9	C
C51	-7.1	C
C52	-7.1	C
C61	-6.9	C
C62	-7.5	C
C71	-7.6	C
C72	-7.1	C
C81	-7.3	C
C82	-7.2	C

S HTD WINDOWS

SW	RTD	25.0	C
SWC	RTD	25.0	C
SEC	RTD	25.0	C
SE	RTD	25.0	C

HTCH RTD 25.0

D CORNER

D11	-10.0	C
D12	-9.9	C
D13	-10.1	C
D23	-9.7	C
D22	-9.8	C
D21	-9.6	C
D31	-10.0	C
D32	-9.8	C
D33	-10.2	C
D43	-9.6	C
D42	-9.6	C
D41	-9.7	C
D51	-9.9	C
D52	-9.9	C
D53	-10.0	C
D63	-9.6	C
D62	-9.7	C
D61	-9.6	C
D71	-9.8	C
D72	-9.8	C
D73	-9.8	C
D83	-9.8	C
D82	-9.8	C
D81	-9.7	C

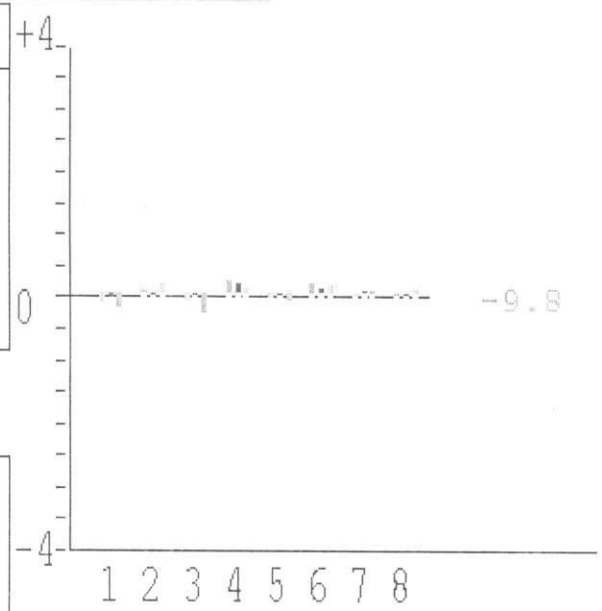

MODULE

DTEMPS

N HTD WINDOWS

NW	RTD	24.0	C
NC	RTD	25.0	C
NE	RTD	25.0	C

MISC. T & P

OUTSIDE AIR	9	C
BASEMENT P	0.00	"H2O

W1 Graphics Window

Print

N VEL.	218.0	KNOTS
S VEL.	218.5	KNOTS
AVG V	218.3	KNOTS
AVG T	-9.8	C
POWER	1.55	MWATT
ENTER TUNN	NO	
AIR SP	60.0	PG
WTRDPSP1	25.0	PD
TIMESET1	0.50	MIN
TIMEREM1	0.5	MIN
WTRDPSP2	75.0	PD
TIMESET2	20.00	MIN
TIMEREM2	20.0	MIN
MBUS	: :	ENABLED
SPUMP1	: :	ON
SPUMP2	: :	OFF
SPUMP3	: :	OFF
ALLOFF	: :	
SQSPRA	: :	OFF
SPRAY1	: :	OFF
SPRAY2	: :	OFF
FL HD1	-0.338	GPM
FL HD2	6.714	GPM
RELHUM	94.0	PCT
AIRTEM	-9.9	C
TDEW	-10.7	C
SPD A	338	RPM
FBR VIBS	0.11	IN/S
RBR VIBS	0.13	IN/S

B STOP MOTOR : :

2007

12:14:16 MENU

2001 - TUNNEL OVERVIEW

12/13/06

CDELP 0.352 "WTR

TOP -7.6 C
MID -7.7 C
BOT -7.1 C

0."OPEN

CLOSED

MANUAL

3 DRIVE

S 144.0 RPM
V 321.4 RPM
A 337 RPM

TOP -10.2 C
MID -9.3 C
BOT -9.6 C

CORNER C

STOP NVENT 1

STOP SVENT 2

CORNER B

NEW HT EXCHGR

HE-DP 1.212

CLOSED

0."OPEN

EXDRDP 135 PSFD

320 RPM

1.154 DEL P
14.296 TOTAL
NORTH PITOT

1-01-00

ESCT AEX FLO 6.708 PPS
WDPF AEX FLO 6.43 "

P -0.52 DEG
S 0.0 DEG
C 0.0 RATE (40% MAX)
MANUAL

4

CORNER D

A CORNER

UPPER

LOWER

TOP -9.9 C
MID -9.8 C
BOT -9.7 C

SOUTH PITOT
14.318 TOTAL
1.160 DEL P

BALANCE CHAMBER PRESS.
13.394 PA

TOP -10.3 C
MID -10.3 C
BOT -10.5 C

DDELP -0.83 "WTR

W1 Graphics Window

Print

N VEL.	218.1	KNOTS
S VEL.	218.2	KNOTS
AVG V	218.1	KNOTS
AVG T	-9.8 C	
POWER	1.55	MWATT
ENTER TUNN	NO	
AIR SP	60.0	PG
WTRDPSP1	25.0	PD
TIMESET1	0.50	MIN
TIMEREM1	0.5	MIN
WTRDPSP2	75.0	PD
TIMESET2	20.00	MIN
TIMEREM2	20.0	MIN
MBUS	: :	ENABLED
SPUMP1	: :	ON
SPUMP2	: :	OFF
SPUMP3	: :	OFF
ALLOFF	: :	
SQSPRA	: :	OFF
SPRAY1	: :	OFF
SPRAY2	: :	OFF
FL HD1	-0.338	GPM
FL HD2	6.780	GPM
RELHUM	93.9	PCT
AIRTEM	-9.9	C
TDEW	-10.7	C
SPD A	337	RPM
FBR VIBS	0.09	IN/S
RBR VIBS	0.14	IN/S

8 STOP MOTOR : :

2001

COMPRESSOR NO. :
CURRENT, AMPS:
COND. PRES, PSIG:
OIL PRES, PSIG:
COND WTR TEMP, F:
AUXILIARY PMP :
BYPASS :
STATUS :

OFF	OFF	OFF	OFF	OFF	OFF	OFF	OFF
ON	ON	ON	ON	ON	ON	ON	ON

7 P PSIA
S PSIA
O %
MAN

SUCTION HEADER PSIA
F

O % AUTO | O % AUTO | O % AUTO | O % AUTO | O % AUTO | O % AUTO

MODE: TEMP 8 P PSIA
S PSIA
O %
MAN

FLASH COOLER PSIA
LVL INCH

TOP C
MID C
BOT C
STEAM 0 %

FAN RPM
AVG TEMP C F
SPRAY1 OFF
SPRAY2 OFF

PUMP #2 PRESS (P) PSIG
5 OFF

PUMP #1 PRESS (P) PSIG
6 ON

IRT

MODE: REFRIG

:1: MAN REFRIGERATION

HTD TURNING VANES

TOP	-25.3	C
MID	-25.7	C
BOT	-25.7	C

TOP	-25.1	C
MID	-25.0	C
BOT	-24.6	C

C11	-23.1	C
C12	-23.6	C
C21	-22.8	C
C22	-23.9	C
C31	-23.3	C
C32	-23.9	C
C41	-24.0	C
C42	-23.7	C
C51	-23.2	C
C52	-23.5	C
C61	-23.1	C
C62	-23.6	C
C71	-23.6	C
C72	-23.5	C
C81	-23.3	C
C82	-23.2	C

D11		C
D12	-26.7	C
D13	-27.1	C
D21		C
D22	-26.8	C
D23	-26.7	C
D31		C
D32	-26.9	C
D33	-27.4	C
D41		C
D42	-26.8	C
D43	-26.8	C
D51		C
D52	-26.9	C
D53	-27.1	C
D61		C
D62	-26.7	C
D63	-26.7	C
D71		C
D72	-26.5	C
D73	-26.5	C
D81		C
D82	-26.5	C
D83	-26.6	C

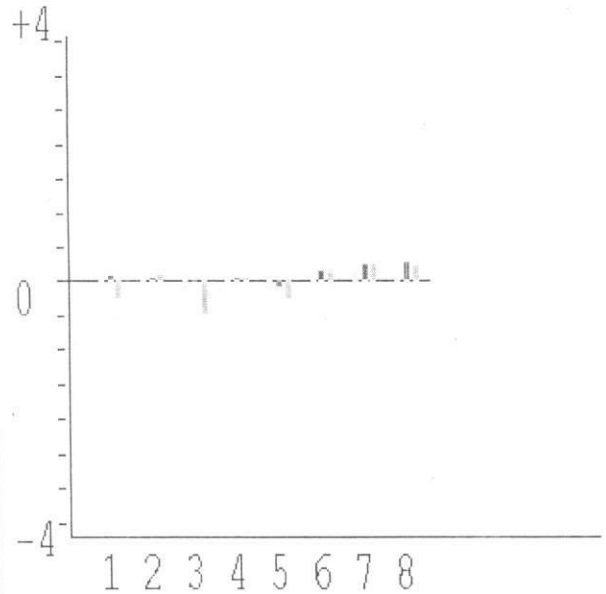

MODULE

DTEMPS

297 RPM

HXTC51	-34	C
TUNNEL DOOR	CLOSED	
OUTSIDE AIR	8	C
LIQ PMP1 DP	14	PSID

W1 Graphics Window

Print

N VEL.	217.2	KNOTS
	250.0	MPH
S VEL.	217.4	KNOTS
	250.3	MPH
AVG V	217.3	KNOTS
	250.1	MPH
AVG T E		C
W	-26.8	C
POWER	1.36	MWATT
ENTER TUNN	NO	
AIR SP	20.0	PG
WTRDPSP1	25.0	PD
TIMESET1	0.50	MIN
TIMEREM1	0.5	MIN
WTRDPSP2	25.0	PD
TIMESET2	10.0	MIN
TIMEREM2	10.0	MIN
MBUS : :	ENABLED	
SPUMP1 : :	ON	
SPUMP2 : :	OFF	
SPUMP3 : :	OFF	
ALLOFF : :		
SQSPRA : :	OFF	
SPRAY1 : :	OFF	
SPRAY2 : :	OFF	
FL HD1	-0.338	GPM
FL HD2	3.830	GPM
RELHUM	74.5	PCT
AIRTEM	-27.0	C
TDEW		C
SPD A	315	RPM
FBR VIBS	0.12	IN/S
RBR VIBS	0.08	IN/S

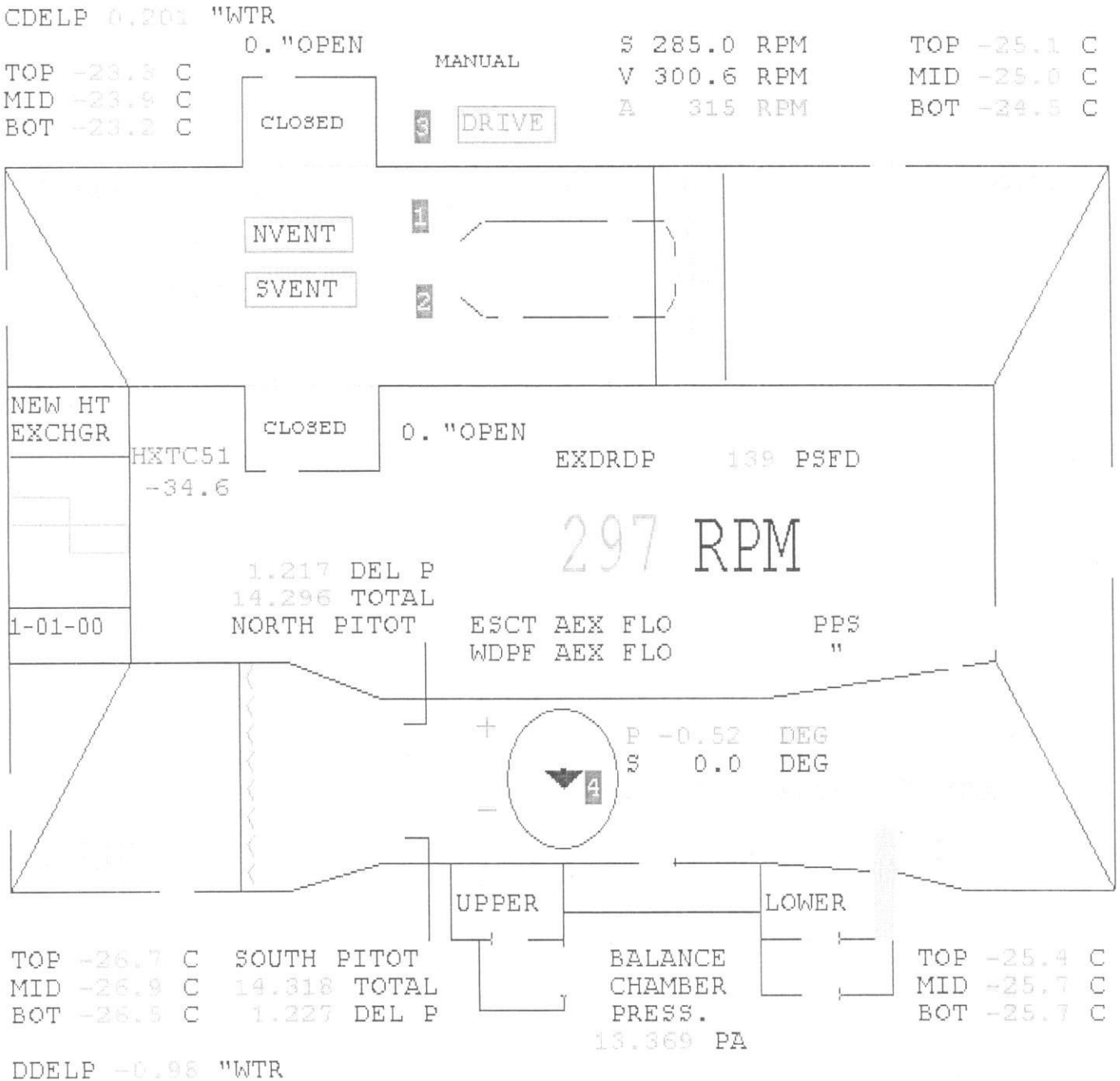
CDELP 0.201 "WTR
0."OPEN
MANUAL
S 285.0 RPM
V 300.6 RPM
A 315 RPM
TOP -25.1 C
MID -25.0 C
BOT -24.5 C
TOP -23.3 C
MID -23.9 C
BOT -23.2 C
CLOSED
3
DRIVE
1
NVENT
SVENT
2
NEW HT
EXCHGR
CLOSED
0."OPEN
HXTC51
-34.6
EXDRDP 139 PSFD
297 RPM
1.217 DEL P
14.296 TOTAL
1-01-00
NORTH PITOT
ESCT AEX FLO
WDPF AEX FLO
PPS
"
+
P -0.52 DEG
S 0.0 DEG
4
-
UPPER
LOWER
TOP -26.7 C
MID -26.9 C
BOT -26.5 C
SOUTH PITOT
14.318 TOTAL
1.227 DEL P
BALANCE
CHAMBER
PRESS.
13.369 PA
TOP -25.4 C
MID -25.7 C
BOT -25.7 C
DDELP -0.98 "WTR
8 STOP MOTOR : :

2001

	1	2	3	4	8	9	10	11
MTR CURR	AMP	AMP	AMP	AMP	AMP	AMP	AMP	AMP
MTR PWR	MW	MW	MW	MW	MW	MW	MW	MW
CONDSR PRES	PSIG	PSIG	PSIG	PSIG	PSIG	PSIG	PSIG	PSIG
AUX OIL PMP	OFF	OFF	OFF	OFF	OFF	OFF	OFF	OFF
LUBE OIL PRESS	PSIG	PSIG	PSIG	PSIG	PSIG	PSIG	PSIG	PSIG
HGBYPS V21	/ [redacted]	/ [redacted]	/ [redacted]	[redacted]				
HG ISOL VLV	OPEN	OPEN	OPEN	OPEN				
ECONOMIZER V18	/ [redacted]	/ [redacted]	/ [redacted]	/ [redacted]	/ [redacted]	/ [redacted]	/ [redacted]	/ [redacted]
COND PURGE VLV	OPEN/ [redacted]	OPEN/ [redacted]	OPEN/ [redacted]	OPEN/ [redacted]	OPEN/ [redacted]	OPEN/ [redacted]	OPEN/ [redacted]	OPEN/ [redacted]
ECONO ISOL VLV	OPEN	OPEN	OPEN	OPEN	OPEN	OPEN	OPEN	OPEN
COMP INLT VLV	OPEN	OPEN	OPEN	OPEN	OPEN	OPEN	OPEN	OPEN
REAR BRG	F	F	F	F	F	F	F	F
SEAL BRG	F	F	F	F	F	F	F	F
THRUST BRG	F	F	F	F	F	F	F	F
LUBE OIL	156 F	F	F	160 F	F	F	162 F	F
MTR GEAR	F	F	F	F	F	F	166 F	F
PINION GEAR	F	F	F	F	F	F	F	F
GEAR BOX OIL	F	F	F	F	F	F	F	F
MTR BRG INB	F	F	F	F	F	F	F	F
MTR BRG OUTB	F	F	F	F	F	F	F	F
COND CTWR	F	F	F	F	F	F	F	F
COND WTR FLW SW	FLOW	FLOW	FLOW	FLOW	FLOW	FLOW	FLOW	FLOW
INSPEC DATE	04/98	02/97	03/98	02/98	02/97	07/99	08/99	12/99
COMP STARTS TTL	MINS	MINS	MINS	MINS	MINS	MINS	MINS	MINS
COMP RUN TTL	MINS	MINS	MINS	MINS	MINS	MINS	MINS	MINS

DIA 3000

STATUS

COMPRESSOR NO. :
CURRENT, AMPS:
COND. PRES, PSIG:
OIL PRES, PSIG:
COND WTR TEMP, F:
AUXILIARY PMP : OFF OFF OFF OFF OFF OFF OFF OFF
BYPASS :
STATUS : ON ON ON ON ON ON ON ON

7 P PSIA
S PSIA
O %
MAN

SUCTION HEADER PSIA
F

O % AUTO | O % AUTO | O % AUTO | O % AUTO | O % AUTO | O % AUTO

MODE: TEMP 8 P PSIA
S PSIA
O %
MAN

FLASH COOLER PSIA
LVL INCH

PUMP #2 PRESS P
PSIG
5 OFF

TOP C
MID C
BOT C
STEAM 0 %

IRT

FAN RPM
AVG TEMP C F
SPRAY1 OFF
SPRAY2 OFF

PUMP #1 PRESS P
PSIG
6 ON

MODE: REFRIG

1 MAN REFRIGERATION

3000

	1	2	3	4	8	9	10	11
MTR CURR	AMP	AMP	AMP	AMP	AMP	AMP	AMP	AMP
MTR PWR	MW	MW	MW	MW	MW	MW	MW	MW
CONDSR PRES	PSIG	PSIG	PSIG	PSIG	PSIG	PSIG	PSIG	PSIG
AUX OIL PMP	OFF	OFF	OFF	OFF	OFF	OFF	OFF	OFF
LUBE OIL PRESS	PSIG	PSIG	PSIG	PSIG	PSIG	PSIG	PSIG	PSIG
HGBYPS V21	/ MAN	/ MAN	/ MAN	MAN				
HG ISOL VLV	OPEN	OPEN	OPEN	OPEN				
ECONOMIZER V18	/ MAN	/ MAN	/ MAN	/ MAN	/ MAN	/ MAN	/ MAN	/ MAN
COND PURGE VLV	OPEN/ MAN	OPEN/ MAN	OPEN/ MAN	OPEN/ MAN	OPEN/ MAN	OPEN/ MAN	OPEN/ MAN	OPEN/ MAN
ECONO ISOL VLV	OPEN	OPEN	OPEN	OPEN	OPEN	OPEN	OPEN	OPEN
COMP INLT VLV	OPEN	OPEN	OPEN	OPEN	OPEN	OPEN	OPEN	OPEN
REAR BRG	F	F	F	F	F	F	F	F
SEAL BRG	F	F	F	F	F	F	F	F
THRUST BRG	F	F	F	F	F	F	F	F
LUBE OIL	F	F	F	F	F	F	F	F
MTR GEAR	F	F	F	F	F	F	166 F	F
PINION GEAR	F	F	F	F	F	F	F	F
GEAR BOX OIL	F	F	F	F	F	F	F	F
MTR BRG INB	F	F	F	F	F	F	F	F
MTR BRG OUTB	F	F	F	F	F	F	F	F
COND CTWR	F	F	F	F	F	F	F	F
COND WTR FLW SW	FLOW	FLOW	FLOW	FLOW	FLOW	FLOW	FLOW	FLOW
INSPEC DATE	04/98	02/97	03/98	02/98	02/97	07/99	08/99	12/99
COMP STARTS TTL	MINS	MINS	MINS	MINS	MINS	MINS	MINS	MINS
COMP RUN TTL	MINS	MINS	MINS	MINS	MINS	MINS	MINS	MINS

3017

HTD TURNING VANES

TOP	-24.9	C
MID	-26.9	C
BOT	-25.8	C

TOP	-24.3	C
MID	-26.0	C
BOT	-23.6	C

C11	-21.1	C
C12	-22.9	C
C21	-22.4	C
C22	-23.5	C
C31	-22.7	C
C32	-23.7	C
C41	-24.2	C
C42	-24.2	C
C51	-23.2	C
C52	-23.4	C
C61	-23.4	C
C62	-23.8	C
C71	-23.6	C
C72	-23.8	C
C81	-23.8	C
C82	-23.5	C

D11		C
D12	-28.2	C
D13	-28.9	C
D21		C
D22	-28.9	C
D23	-28.7	C
D31		C
D32	-29.0	C
D33	-29.5	C
D41		C
D42	-29.2	C
D43	-29.1	C
D51		C
D52	-29.0	C
D53	-29.3	C
D61		C
D62	-29.0	C
D63	-29.1	C
D71		C
D72	-28.4	C
D73	-28.8	C
D81		C
D82	-28.6	C
D83	-28.6	C

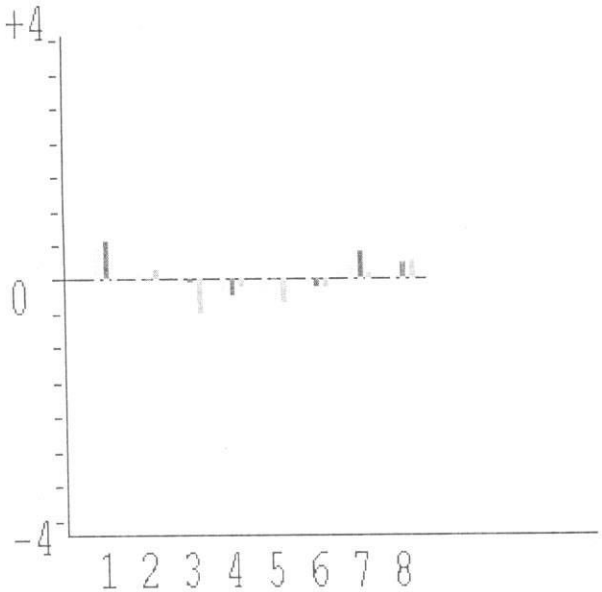

MODULE

DTEMPS

144 RPM

HXTC51	-35	C
TUNNEL DOOR	CLOSED	
OUTSIDE AIR	7	C
LIQ PMP1 DP	12	PSID

W1 Graphics Window

Print

N VEL.	100.0	KNOTS
	115.1	MPH
S VEL.	99.9	KNOTS
	114.8	MPH
AVG V	99.9	KNOTS
	115.0	MPH
AVG T E		C
W	-28.9	C
POWER	0.15	MWATT
ENTER TUNN	NO	
AIR SP	20.0	PG
WTRDPSP1	25.0	PD
TIMESET1	0.50	MIN
TIMEREM1	0.5	MIN
WTRDPSP2	25.0	PD
TIMESET2	10.0	MIN
TIMEREM2	10.0	MIN
MBUS	: :	ENABLED
SPUMP1	: :	ON
SPUMP2	: :	OFF
SPUMP3	: :	OFF
ALLOFF	: :	
SQSPRA	: :	OFF
SPRAY1	: :	OFF
SPRAY2	: :	OFF
FL HD1	-0.338	GPM
FL HD2	3.533	GPM
RELHUM	62.0	PCT
AIRTEM	-28.1	C
TDEW		C
SPD A	155	RPM
FBR VIBS	0.10	IN/S
RBR VIBS	0.13	IN/S

HTD TURNING VANES

TOP	-26.5	C
MID	-27.6	C
BOT	-27.2	C
TOP	-26.2	C
MID	-26.7	C
BOT	-25.6	C
C11	-24.1	C
C12	-25.2	C
C21	-24.6	C
C22	-25.5	C
C31	-24.9	C
C32	-25.6	C
C41	-25.9	C
C42	-25.9	C
C51	-24.9	C
C52	-25.3	C
C61	-25.0	C
C62	-25.3	C
C71	-25.3	C
C72	-25.4	C
C81	-25.1	C
C82	-25.4	C

D11		C
D12	-29.0	C
D13	-29.5	C
D21		C
D22	-29.2	C
D23	-29.1	C
D31		C
D32	-29.3	C
D33	-29.8	C
D41		C
D42	-29.4	C
D43	-29.3	C
D51		C
D52	-29.3	C
D53	-29.6	C
D61		C
D62	-29.2	C
D63	-29.2	C
D71		C
D72	-28.9	C
D73	-29.0	C
D81		C
D82	-28.9	C
D83	-28.8	C

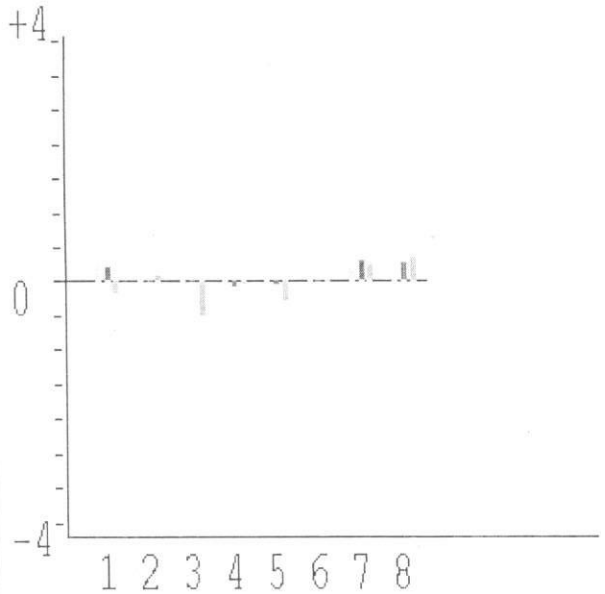

MODULE

DTEMPS

211 RPM

HXTC51	-36	C
TUNNEL DOOR	CLOSED	
OUTSIDE AIR	7	C
LIQ PMP1 DP	13	PSID

W1 Graphics Window

Print

N VEL.	149.3	KNOTS
	171.8	MPH
S VEL.	149.8	KNOTS
	172.4	MPH
AVG V	149.5	KNOTS
	172.1	MPH
AVG T E		C
W	-29.2	C
POWER	0.55	MWATT
ENTER TUNN	NO	
AIR SP	20.0	PG
WTRDPSP1	25.0	PD
TIMESET1	0.50	MIN
TIMEREM1	0.5	MIN
WTRDPSP2	25.0	PD
TIMESET2	10.0	MIN
TIMEREM2	10.0	MIN
MBUS	: :	ENABLED
SPUMP1	: :	ON
SPUMP2	: :	OFF
SPUMP3	: :	OFF
ALLOFF	: :	
SQSPRA	: :	OFF
SPRAY1	: :	OFF
SPRAY2	: :	OFF
FL HD1	-0.338	GPM
FL HD2	3.253	GPM
RELHUM	68.5	PCT
AIRTEM	-29.1	C
TDEW		C
SPD A	225	RPM
FBR VIBS	0.06	IN/S
RBR VIBS	0.11	IN/S

COMPRESSOR NO. :
CURRENT. AMPS:
COND. PRES, PSIG:
OIL PRES, PSIG:
COND WTR TEMP, F:
AUXILIARY PMP : OFF OFF OFF OFF OFF OFF OFF OFF
BYPASS :
STATUS : ON ON ON ON ON ON ON ON

7 P PSIA
S PSIA
O %
MAN

SUCTION HEADER

PSIA
F

O % AUTO | O % AUTO | O % AUTO | O % AUTO | O % AUTO | O % AUTO

MODE:
TEMP

8 P PSIA
S PSIA
O %
MAN

FLASH COOLER

LVL INCH

PSIA

PUMP #2
PRESS
PSIG
5 OFF

TOP C
MID C
BOT C
STEAM 0 %

IRT

FAN RPM

AVG TEMP C F

SPRAY1 OFF
SPRAY2 OFF

PUMP #1
PRESS
PSIG
6 ON

MODE: REFRIG

1 MAN REFRIGERATION

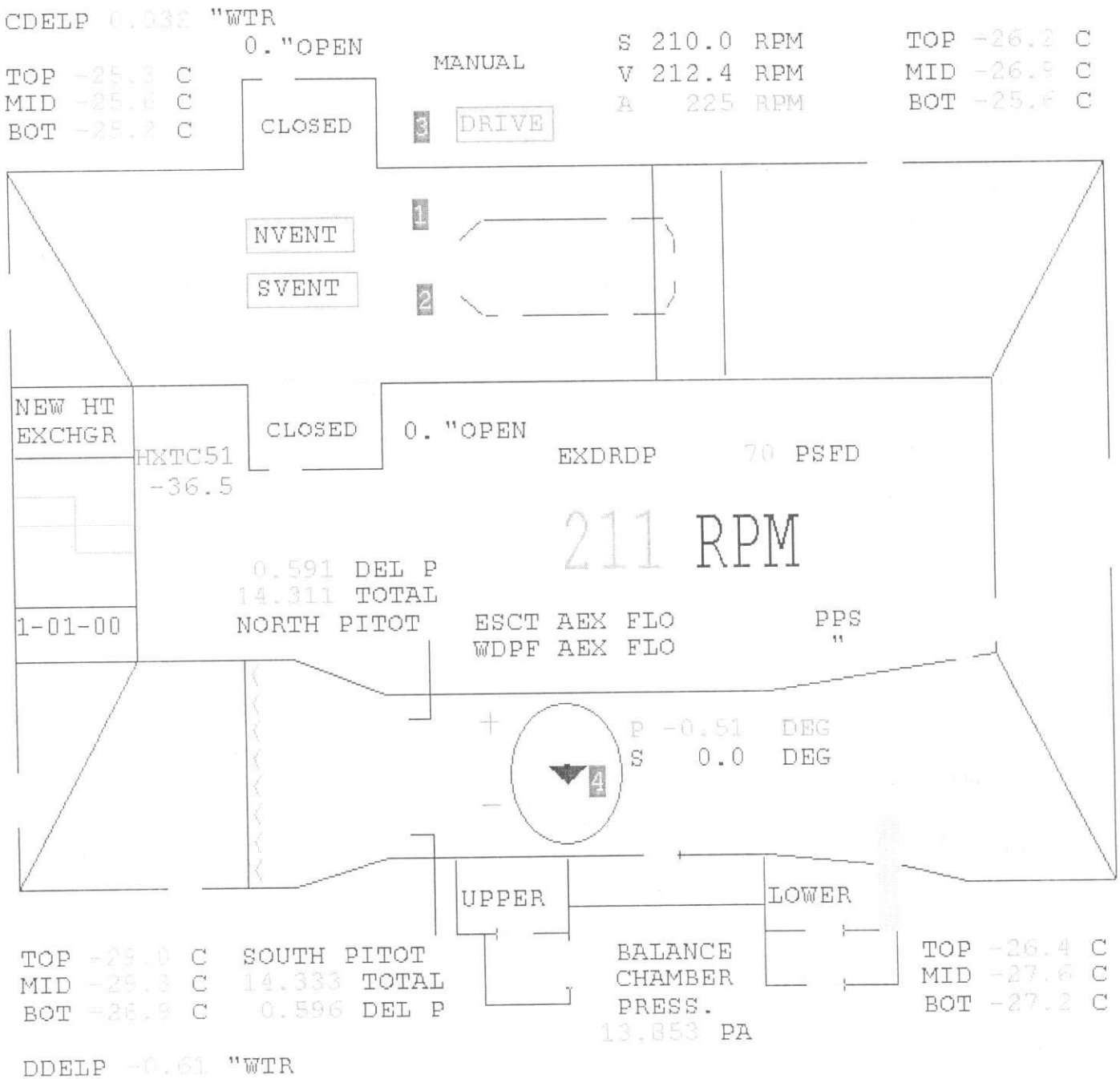
CDELP 0.032 "WTR
0."OPEN
MANUAL
S 210.0 RPM
V 212.4 RPM
A 225 RPM
TOP -26.2 C
MID -26.9 C
BOT -25.6 C
TOP -25.3 C
MID -25.6 C
BOT -25.2 C
CLOSED
3
DRIVE
1
NVENT
SVENT
2
NEW HT
EXCHGR
HXTC51
-36.5
CLOSED
0."OPEN
EXDRDP 70 PSFD
211 RPM
0.591 DEL P
14.311 TOTAL
NORTH PITOT
ESCT AEX FLO
WDPF AEX FLO
PPS
"
1-01-00
+
P -0.51 DEG
S 0.0 DEG
4
-
UPPER
LOWER
TOP -29.0 C
MID -29.3 C
BOT -28.9 C
SOUTH PITOT
14.333 TOTAL
0.596 DEL P
BALANCE
CHAMBER
PRESS.
13.853 PA
TOP -26.4 C
MID -27.6 C
BOT -27.2 C
DDELP -0.61 "WTR
8 STOP MOTOR : :

2001

	1	2	3	4	8	9	10	11
MTR CURR	AMP	AMP	AMP	AMP	AMP	AMP	AMP	AMP
MTR PWR	MW	MW	MW	MW	MW	MW	MW	MW
CONDSR PRES	PSIG	PSIG	PSIG	PSIG	PSIG	PSIG	PSIG	PSIG
AUX OIL PMP	OFF	OFF	OFF	OFF	OFF	OFF	OFF	OFF
LUBE OIL PRESS	PSIG	PSIG	PSIG	PSIG	PSIG	PSIG	PSIG	PSIG
HGBYPS V21	/ MAN	/ MAN	/ MAN	MAN				
HG ISOL VLV	OPEN	OPEN	OPEN	OPEN				
ECONOMIZER V18	/ MAN	/ MAN	/ MAN	/ MAN	/ MAN	/ MAN	/ MAN	/ MAN
COND PURGE VLV	OPEN/ MAN	OPEN/ MAN	OPEN/ MAN	OPEN/ MAN	OPEN/ MAN	OPEN/ MAN	OPEN/ MAN	OPEN/ MAN
ECONO ISOL VLV	OPEN	OPEN	OPEN	OPEN	OPEN	OPEN	OPEN	OPEN
COMP INLT VLV	OPEN	OPEN	OPEN	OPEN	OPEN	OPEN	OPEN	OPEN
REAR BRG	F	F	F	F	F	F	F	F
SEAL BRG	F	F	F	F	F	F	F	F
THRUST BRG	F	F	F	F	F	F	F	F
LUBE OIL	F	F	F	155 F	F	F	F	F
MTR GEAR	F	F	F	F	F	F	165 F	F
PINION GEAR	F	F	F	F	F	F	F	F
GEAR BOX OIL	F	F	F	F	F	F	F	F
MTR BRG INB	F	F	F	F	F	F	F	F
MTR BRG OUTB	F	F	F	F	F	F	F	F
COND CTWR	F	F	F	F	F	F	F	F
COND WTR FLW SW	FLOW	FLOW	FLOW	FLOW	FLOW	FLOW	FLOW	FLOW
INSPEC DATE	04/98	02/97	03/98	02/98	02/97	07/99	08/99	12/99
COMP STARTS TTL	MINS	MINS	MINS	MINS	MINS	MINS	MINS	MINS
COMP RUN TTL	MINS	MINS	MINS	MINS	MINS	MINS	MINS	MINS

DIA 3000

STATUS

COMPRESSOR NO. :
CURRENT, AMPS:
COND. PRES, PSIG:
OIL PRES, PSIG:
COND WTR TEMP, F:

AUXILIARY PMP :	OFF	OFF	OFF	OFF	OFF	OFF	OFF	OFF
BYPASS :								
STATUS :	ON	ON	ON	ON	ON	ON	ON	ON

7 P PSIA
S PSIA
O %
MAN

SUCTION HEADER PSIA
F

O % AUTO | O % AUTO | O % AUTO | O % AUTO | O % AUTO | O % AUTO

MODE: TEMP 8 P PSIA
S PSIA
O %
MAN

FLASH COOLER PSIA
LVL INCH

TOP C
MID C
BOT C
STEAM 0 %

FAN RPM
AVG TEMP C F
SPRAY1 OFF
SPRAY2 OFF

PUMP #2 PRESS PSIG
5 OFF

PUMP #1 PRESS PSIG
6 ON

IRT

MODE: REFRIG

1 MAN REFRIGERATION

3000

HTD TURNING VANES

TOP	-22.6	C
MID	-22.5	C
BOT	-22.6	C

TOP	-22.4	C
MID	-21.9	C
BOT	-21.8	C

C11	-19.9	C
C12	-20.6	C
C21	-19.9	C
C22	-20.7	C
C31	-20.3	C
C32	-20.7	C
C41	-20.9	C
C42	-20.7	C
C51	-20.2	C
C52	-20.3	C
C61	-19.9	C
C62	-20.3	C
C71	-20.2	C
C72	-20.2	C
C81	-20.3	C
C82	-20.3	C

D11		C
D12	-24.1	C
D13	-24.6	C
D21		C
D22	-24.1	C
D23	-24.0	C
D31		C
D32	-24.1	C
D33	-24.7	C
D41		C
D42	-23.9	C
D43	-23.9	C
D51		C
D52	-24.1	C
D53	-24.4	C
D61		C
D62	-23.9	C
D63	-23.8	C
D71		C
D72	-23.7	C
D73	-23.8	C
D81		C
D82	-23.8	C
D83	-23.8	C

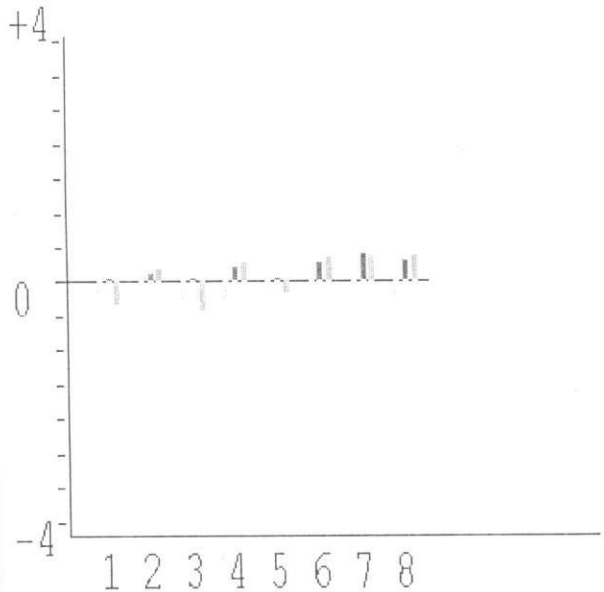

MODULE

DTEMPS

316 RPM

HXTC51	-32	C
TUNNEL DOOR	CLOSED	
OUTSIDE AIR	7	C
LIQ PMP1 DP	16	PSID

W1 Graphics Window

Print

N VEL.	211.2	KNOTS
	243.0	MPH
S VEL.	211.9	KNOTS
	243.4	MPH
AVG V	211.3	KNOTS
	243.2	MPH
AVG T E		C
W	-24.2	C
POWER	1.55	MWATT
ENTER TUNN	NO	
AIR SP	60.0	PG
WTRDPSP1	25.0	PD
TIMESET1	0.50	MIN
TIMEREM1	0.5	MIN
WTRDPSP2	75.0	PD
TIMESET2	20.0	MIN
TIMEREM2	9.5	MIN
MBUS : :	ENABLED	
SPUMP1 : :	ON	
SPUMP2 : :	OFF	
SPUMP3 : :	OFF	
ALLOFF : :		
SQSPRA : :	OFF	
SPRAY1 : :	OFF	
SPRAY2 : :	OFF	
FL HD1	-0.338	GPM
FL HD2	6.673	GPM
RELHUM	81.7	PCT
AIRTEM	-24.2	C
TDEW		C
SPD A	333	RPM
FBR VIBS	0.15	IN/S
RBR VIBS	0.10	IN/S

	1	2	3	4	8	9	10	11
MTR CURR	AMP	AMP	AMP	AMP	AMP	AMP	AMP	AMP
MTR PWR	MW	MW	MW	MW	MW	MW	MW	MW
CONDSR PRES	PSIG	PSIG	PSIG	PSIG	PSIG	PSIG	PSIG	PSIG
AUX OIL PMP	OFF	OFF	OFF	OFF	OFF	OFF	OFF	OFF
LUBE OIL PRESS	PSIG	PSIG	PSIG	PSIG	PSIG	PSIG	PSIG	PSIG
HGBYPS V21	/ MAN	/ MAN	/ MAN	MAN				
HG ISOL VLV	OPEN	OPEN	OPEN	OPEN				
ECONOMIZER V18	/ MAN	/ MAN	/ MAN	/ MAN	/ MAN	/ MAN	/ MAN	/ MAN
COND PURGE VLV	OPEN/ MAN	OPEN/ MAN	OPEN/ MAN	OPEN/ MAN	OPEN/ MAN	OPEN/ MAN	OPEN/ MAN	OPEN/ MAN
ECONO ISOL VLV	OPEN	OPEN	OPEN	OPEN	OPEN	OPEN	OPEN	OPEN
COMP INLT VLV	OPEN	OPEN	OPEN	OPEN	OPEN	OPEN	OPEN	OPEN
REAR BRG	F	F	F	F	F	F	F	F
SEAL BRG	F	F	F	F	F	F	F	F
THRUST BRG	F	F	F	F	F	F	F	F
LUBE OIL	158 F	F	F	160 F	F	F	162 F	F
MTR GEAR	F	F	F	F	F	F	167 F	F
PINION GEAR	F	F	F	F	F	F	F	F
GEAR BOX OIL	F	F	F	F	F	F	F	F
MTR BRG INB	F	F	F	F	F	F	F	F
MTR BRG OUTB	F	F	F	F	F	F	F	F
COND CTWR	F	F	F	F	F	F	F	F
COND WTR FLW SW	FLOW	FLOW	FLOW	FLOW	FLOW	FLOW	FLOW	FLOW
INSPEC DATE	04/98	02/97	03/98	02/98	02/97	07/99	08/99	12/99
COMP STARTS TTL	MINS	MINS	MINS	MINS	MINS	MINS	MINS	MINS
COMP RUN TTL	MINS	MINS	MINS	MINS	MINS	MINS	MINS	MINS

CDELP 0.243 "WTR

0. "OPEN

MANUAL

S 285.0 RPM
V 318.8 RPM
A 333 RPM

TOP -22.7 C
MID -22.4 C
BOT -21.9 C

TOP -20.7 C
MID -20.9 C
BOT -20.5 C

CLOSED

3 DRIVE

NVENT 1

SVENT 2

NEW HT EXCHGR

HXTC51 -33.1

CLOSED

0. "OPEN

EXDRDP 135 PSFD

316 RPM

1.160 DEL P
14.296 TOTAL
NORTH PITOT

1-01-00

ESCT AEX FLO
WDPF AEX FLO

PPS
"

+

P -0.52 DEG
S 0.0 DEG

4

-

UPPER

LOWER

TOP -24.2 C
MID -24.2 C
BOT -23.9 C

SOUTH PITOT
14.323 TOTAL
1.161 DEL P

BALANCE
CHAMBER
PRESS.
13.403 PA

TOP -23.1 C
MID -23.0 C
BOT -23.1 C

DDELP -0.86 "WTR

8 STOP MOTOR : :

2001

MENU

COMPRESSOR NO. :
CURRENT, AMPS :
COND. PRES, PSIG:
POWER, MWATTS :

ON MAN ON MAN ON MAN ON MAN ON MAN ON MAN ON MAN ON MAN

V14A MAN V14 MAN

V49 O %

V35 MAN

SUCTION HEADER

P PSIA
S PSIA

P PSIA
S PSIA

FROM V33 CONDS

PURGE PUMP DOWN UNIT

1 REMOTE

2 REMOTE

V13A MAN

V13 MAN

FLASH COOLER

P PSIA
S PSIA

IN

V16

V15

OPEN

COIL DRN VLV CLOSED

V32

V80 O %

MAN

H

MAN

3015

STORAGE TANK

TRAVEL

OPEN

V24 MAN

PSIA
IN

MODE: REFRIG

MODE:

MENU

DIA 3000

STATUS

COMPRESSOR NO. :
CURRENT. AMPS:
COND. PRES, PSIG:
OIL PRES, PSIG:
COND WTR TEMP, F:

AUXILIARY PMP :	OFF	OFF	OFF	ON	ON	ON	ON	ON
BYPASS :								
STATUS :	ON	ON	ON	OFF	OFF	OFF	OFF	OFF

7 P PSIA
S PSIA
O %
MAN

SUCTION HEADER

PSIA
F

O % AUTO | O % AUTO | O % AUTO | O % AUTO | O % AUTO | O % AUTO

MODE: TEMP

8 P PSIA
S PSIA
O %
MAN

FLASH COOLER

LVL INCH

PSIA

TOP C
MID C
BOT C
STEAM 0 %

FAN RPM

AVG TEMP C F

SPRAY1 OFF
SPRAY2 OFF

PUMP #2 PRESS P PSIG 5 OFF

PUMP #1 PRESS P PSIG 6 ON

IRT

MODE: REFRIG

:1: MAN REFRIGERATION

3000

CDELP 0.415 "WTR

0."OPEN

MANUAL

S 297.0 RPM
V 321.4 RPM
A 338 RPM

TOP -10.2 C
MID -9.2 C
BOT -9.4 C

TOP -7.7 C
MID -7.9 C
BOT -7.2 C

CLOSED

3 DRIVE

1 NVENT

2 SVENT

NEW HT EXCHGR

HXTC51
-14.1

CLOSED

0."OPEN

EXDRDP 135 PSFD

320 RPM

1.156 DEL P
14.296 TOTAL
NORTH PITOT

1-01-00

ESCT AEX FLO
WDPF AEX FLO

PPS
"

+

P -0.52 DEG
S 0.0 DEG

4

−

UPPER

LOWER

TOP -10.0 C
MID -9.9 C
BOT -9.8 C

SOUTH PITOT
14.318 TOTAL
1.163 DEL P

BALANCE
CHAMBER
PRESS.
13.394 PA

TOP -10.3 C
MID -10.3 C
BOT -10.4 C

DDELP -0.77 "WTR

8 STOP MOTOR

2001

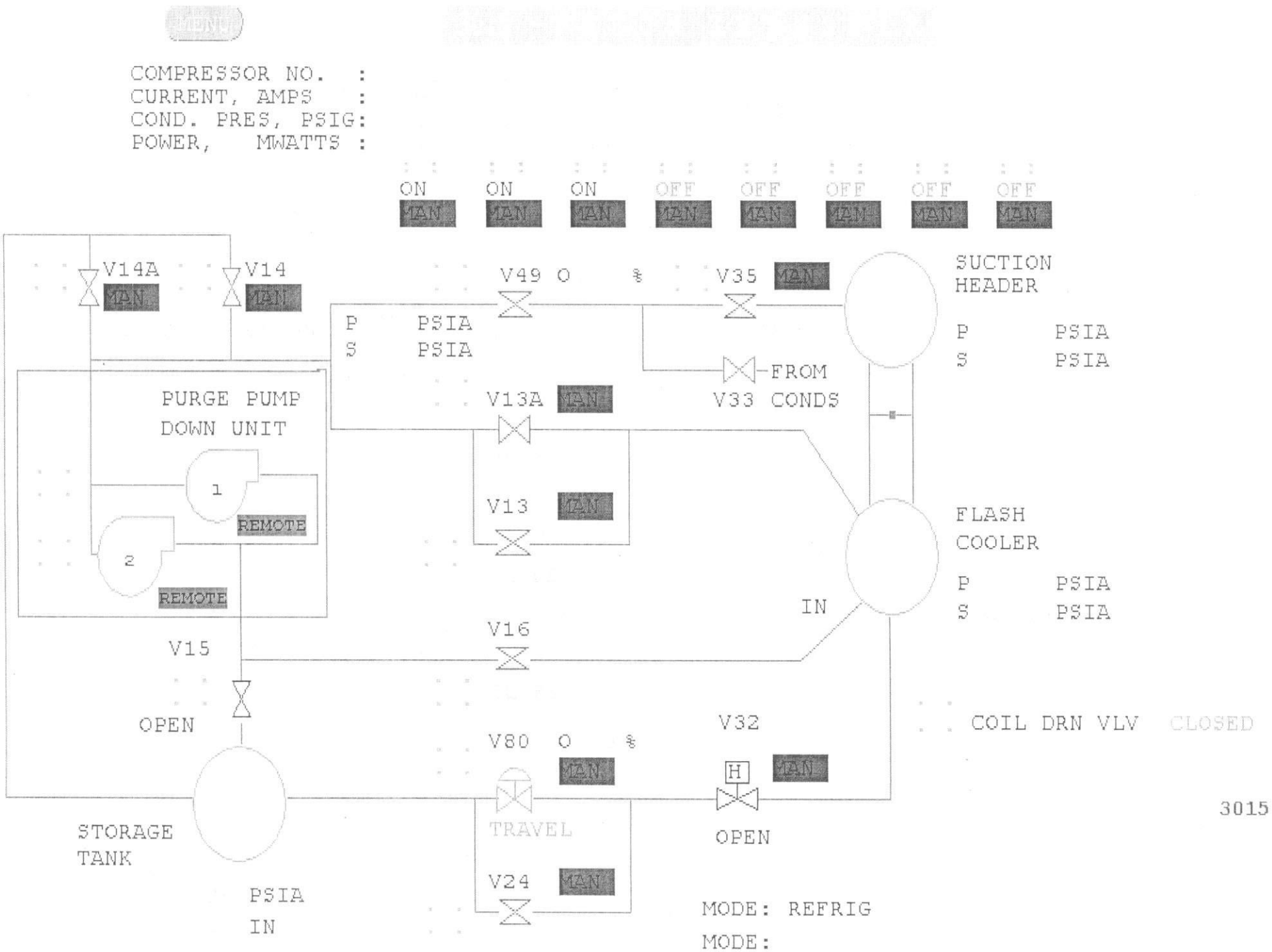
COMPRESSOR NO. :
CURRENT, AMPS :
COND. PRES, PSIG:
POWER, MWATTS :
ON
ON
ON
OFF
OFF
OFF
OFF
OFF
V14A
V14
V49 O %
V35
SUCTION HEADER
P PSIA
S PSIA
P PSIA
S PSIA
FROM V33 CONDS
PURGE PUMP DOWN UNIT
V13A
1
REMOTE
V13
2
REMOTE
FLASH COOLER
P PSIA
S PSIA
IN
V16
V15
OPEN
V32
COIL DRN VLV CLOSED
V80 O %
H
TRAVEL
OPEN
3015
STORAGE TANK
V24
PSIA IN
MODE: REFRIG
MODE:

MENU

HTD TURNING VANES

TOP	-10.2	C
MID	-10.2	C
BOT	-10.3	C

TOP	-10.2	C
MID	-9.4	C
BOT	-9.6	C

C11	-7.2	C
C12	-7.7	C
C21	-7.2	C
C22	-8.0	C
C31	-7.2	C
C32	-7.7	C
C41	-7.7	C
C42	-7.8	C
C51	-7.1	C
C52	-7.1	C
C61	-6.9	C
C62	-7.4	C
C71	-7.6	C
C72	-7.2	C
C81	-7.2	C
C82	-7.2	C

D11		C
D12	-9.9	C
D13	-10.1	C
D21		C
D22	-9.8	C
D23	-9.7	C
D31		C
D32	-9.8	C
D33	-10.2	C
D41		C
D42	-9.6	C
D43	-9.6	C
D51		C
D52	-9.9	C
D53	-10.0	C
D61		C
D62	-9.7	C
D63	-9.6	C
D71		C
D72	-9.8	C
D73	-9.8	C
D81		C
D82	-9.8	C
D83	-9.8	C

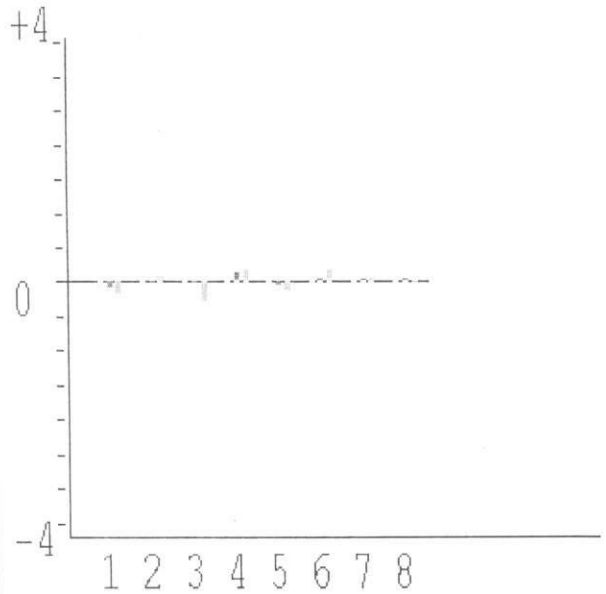

MODULE

DTEMPS

320 RPM

HXTC51	-14	C
TUNNEL DOOR	CLOSED	
OUTSIDE AIR	9	C
LIQ PMP1 DP	11	PSID

W1 Graphics Window

Print

N VEL.	217.8	KNOTS
	250.6	MPH
S VEL.	217.9	KNOTS
	251.3	MPH
AVG V	218.0	KNOTS
	251.0	MPH
AVG T E		C
W	-9.8	C
POWER	1.55	MWATT
ENTER TUNN	NO	
AIR SP	60.0	PG
WTRDPSP1	25.0	PD
TIMESET1	0.50	MIN
TIMEREM1	0.5	MIN
WTRDPSP2	75.0	PD
TIMESET2	20.0	MIN
TIMEREM2	20.0	MIN
MBUS	: :	ENABLED
SPUMP1	: :	ON
SPUMP2	: :	OFF
SPUMP3	: :	OFF
ALLOFF	: :	
SQSPRA	: :	OFF
SPRAY1	: :	OFF
SPRAY2	: :	OFF
FL HD1	-0.338	GPM
FL HD2	6.738	GPM
RELHUM	94.0	PCT
AIRTEM	-9.9	C
TDEW		C
SPD A	338	RPM
FBR VIBS	0.08	IN/S
RBR VIBS	0.14	IN/S

/v01

2007

	1	2	3	4	8	9	10	11
MTR CURR	AMP	AMP	AMP	AMP	AMP	AMP	AMP	AMP
MTR PWR	MW	MW	MW	MW	MW	MW	MW	MW
CONDSR PRES	PSIG	PSIG	PSIG	PSIG	PSIG	PSIG	PSIG	PSIG
AUX OIL PMP	OFF	OFF	OFF	ON	ON	ON	ON	ON
LUBE OIL PRESS	PSIG	PSIG	PSIG	PSIG	PSIG	PSIG	PSIG	PSIG
HGBYPS V21	/ MAN	/ MAN	/ MAN	MAN				
HG ISOL VLV	OPEN	OPEN	OPEN	OPEN				
ECONOMIZER V18	/ MAN	/ MAN	/ MAN	/ MAN	/ MAN	/ MAN	/ MAN	/ MAN
COND PURGE VLV	OPEN/ MAN	OPEN/ MAN	OPEN/ MAN	OPEN/ MAN	OPEN/ MAN	OPEN/ MAN	OPEN/ MAN	OPEN/ MAN
ECONO ISOL VLV	OPEN	OPEN	OPEN	OPEN	OPEN	OPEN	OPEN	OPEN
COMP INLT VLV	OPEN	OPEN	OPEN	OPEN	OPEN	OPEN	OPEN	OPEN
REAR BRG	F	F	F	F	F	F	F	F
SEAL BRG	F	F	F	F	F	F	F	F
THRUST BRG	F	F	F	F	F	F	F	F
LUBE OIL	158 F	F	F	F	F	F	F	F
MTR GEAR	F	F	F	F	F	F	F	F
PINION GEAR	F	F	F	F	F	F	F	F
GEAR BOX OIL	F	F	F	F	F	F	F	F
MTR BRG INB	F	F	F	F	F	F	F	F
MTR BRG OUTB	F	F	F	F	F	F	F	F
COND CTWR	F	F	F	F	F	F	F	F
COND WTR FLW SW	FLOW	FLOW	FLOW	FLOW	FLOW	FLOW	FLOW	FLOW
INSPEC DATE	04/98	02/97	03/98	02/98	02/97	07/99	08/99	12/99
COMP STARTS TTL	MINS	MINS	MINS	MINS	MINS	MINS	MINS	MINS
COMP RUN TTL	MINS	MINS	MINS	MINS	MINS	MINS	MINS	MINS

STATUS

COMPRESSOR NO. :
CURRENT, AMPS:
COND. PRES, PSIG:
OIL PRES, PSIG:
COND WTR TEMP, F:

AUXILIARY PMP :	OFF	OFF	OFF	ON	ON	ON	ON	ON
BYPASS :								
STATUS :	ON	ON	ON	OFF	OFF	OFF	OFF	OFF

7 P PSIA
S PSIA
O %
MAN

SUCTION HEADER

PSIA
F

O % AUTO | O % AUTO | O % AUTO | O % AUTO | O % AUTO | O % AUTO

MODE:
TEMP

8 P PSIA
S PSIA
O %
MAN

FLASH COOLER

LVL INCH

PSIA

TOP C
MID C
BOT C
STEAM 0 %

FAN RPM

AVG TEMP C F

SPRAY1 OFF
SPRAY2 OFF

IRT

PUMP #2
PRESS
PSIG
5 OFF

PUMP #1
PRESS
PSIG
6 ON

MODE: REFRIG

:1: MAN REFRIGERATION

CDELP 0.123 "WTR

0."OPEN

MANUAL

S 211.0 RPM
V 224.2 RPM
A 237 RPM

TOP -10.6 C
MID -10.1 C
BOT -9.9 C

TOP -8.9 C
MID -9.2 C
BOT -8.8 C

CLOSED

3 DRIVE

1

NVENT

SVENT

2

NEW HT
EXCHGR

HXTC51
-12.8

CLOSED

0."OPEN

EXDRDP 65 PSFD

224 RPM

0.553 DEL P
14.301 TOTAL
NORTH PITOT

1-01-00

ESCT AEX FLO
WDPF AEX FLO

PPS
"

+

P -0.51 DEG
S 0.0 DEG

4

−

UPPER

LOWER

TOP -10.7 C
MID -10.6 C
BOT -10.6 C

SOUTH PITOT
14.328 TOTAL
0.557 DEL P

BALANCE
CHAMBER
PRESS.
13.877 PA

TOP -10.7 C
MID -10.7 C
BOT -11.0 C

DDELP -0.49 "WTR

8 STOP MOTOR

2001

MENU

COMPRESSOR NO. :
CURRENT, AMPS :
COND. PRES, PSIG:
POWER, MWATTS :

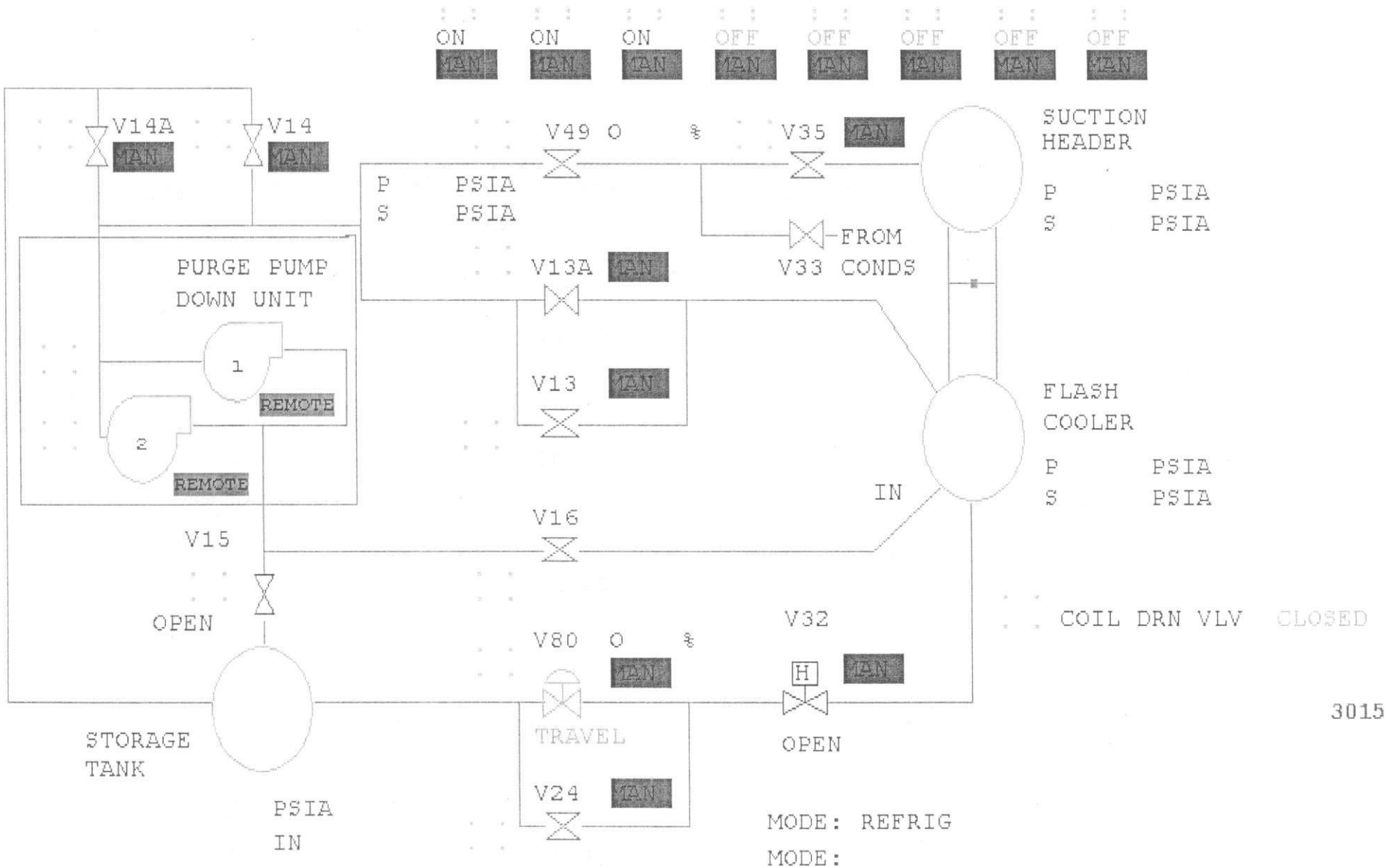

MENU

	1	2	3	4	8	9	10	11
MTR CURR	AMP	AMP	AMP	AMP	AMP	AMP	AMP	AMP
MTR PWR	MW	MW	MW	MW	MW	MW	MW	MW
CONDSR PRES	PSIG	PSIG	PSIG	PSIG	PSIG	PSIG	PSIG	PSIG
AUX OIL PMP	OFF	OFF	OFF	ON	ON	ON	ON	ON
LUBE OIL PRESS	PSIG	PSIG	PSIG	PSIG	PSIG	PSIG	PSIG	PSIG
HGBYPS V21	/ MAN	/ MAN	/ MAN	MAN				
HG ISOL VLV	OPEN	OPEN	OPEN	OPEN				
ECONOMIZER V18	/ MAN	/ MAN	/ MAN	/ MAN	/ MAN	/ MAN	/ MAN	/ MAN
COND PURGE VLV	OPEN/ MAN	OPEN/ MAN	OPEN/ MAN	OPEN/ MAN	OPEN/ MAN	OPEN/ MAN	OPEN/ MAN	OPEN/ MAN
ECONO ISOL VLV	OPEN	OPEN	OPEN	OPEN	OPEN	OPEN	OPEN	OPEN
COMP INLT VLV	OPEN	OPEN	OPEN	OPEN	OPEN	OPEN	OPEN	OPEN
REAR BRG	F	F	F	F	F	F	F	F
SEAL BRG	F	F	F	F	F	F	F	F
THRUST BRG	F	F	F	F	F	F	F	F
LUBE OIL	158 F	F	F	F	F	F	F	F
MTR GEAR	F	F	F	F	F	F	F	F
PINION GEAR	F	F	F	F	F	F	F	F
GEAR BOX OIL	F	F	F	F	F	F	F	F
MTR BRG INB	F	F	F	F	F	F	F	F
MTR BRG OUTB	F	F	F	F	F	F	F	F
COND CTWR	F	F	F	F	F	F	F	F
COND WTR FLW SW	FLOW	FLOW	FLOW	FLOW	FLOW	FLOW	FLOW	FLOW
INSPEC DATE	04/98	02/97	03/98	02/98	02/97	07/99	08/99	12/99
COMP STARTS TTL	MINS	MINS	MINS	MINS	MINS	MINS	MINS	MINS
COMP RUN TTL	MINS	MINS	MINS	MINS	MINS	MINS	MINS	MINS

MENU

HTD TURNING VANES

TOP	-10.7	C
MID	-10.8	C
BOT	-11.0	C

TOP	-10.6	C
MID	-10.1	C
BOT	-9.8	C

C11	-8.5	C
C12	-9.1	C
C21	-8.4	C
C22	-9.2	C
C31	-8.6	C
C32	-8.9	C
C41	-9.2	C
C42	-9.2	C
C51	-8.4	C
C52	-8.6	C
C61	-8.2	C
C62	-8.8	C
C71	-8.6	C
C72	-8.8	C
C81	-8.6	C
C82	-8.7	C

D11		C
D12	-10.6	C
D13	-10.7	C
D21		C
D22	-10.6	C
D23	-10.5	C
D31		C
D32	-10.6	C
D33	-10.8	C
D41		C
D42	-10.5	C
D43	-10.5	C
D51		C
D52	-10.7	C
D53	-10.6	C
D61		C
D62	-10.6	C
D63	-10.5	C
D71		C
D72	-10.6	C
D73	-10.5	C
D81		C
D82	-10.6	C
D83	-10.6	C

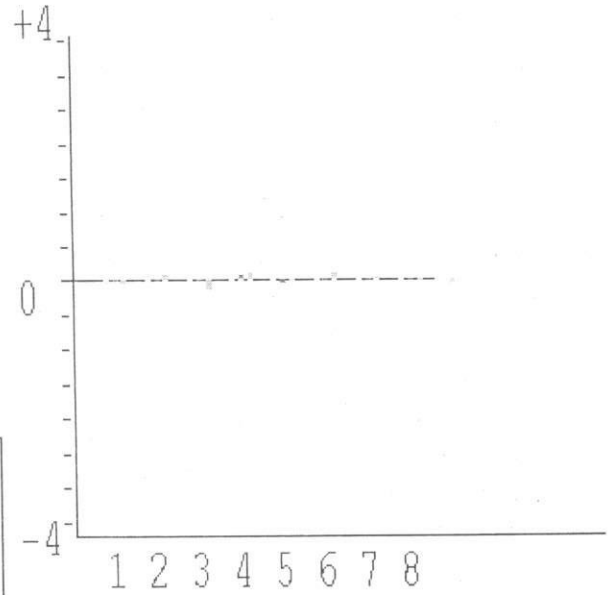

DTEMPS

224 RPM

HXTC51	-12	C
TUNNEL DOOR	CLOSED	
OUTSIDE AIR	9	C
LIQ PMP1 DP	7.6	PSID

W1 Graphics Window

Print

N VEL.	149.7	KNOTS
	172.3	MPH
S VEL.	150.0	KNOTS
	172.9	MPH
AVG V	149.9	KNOTS
	172.6	MPH
AVG T E		C
W	-10.6	C
POWER	0.55	MWATT
ENTER TUNN	NO	
AIR SP	20.0	PG
WTRDPSP1	25.0	PD
TIMESET1	0.50	MIN
TIMEREM1	0.5	MIN
WTRDPSP2	75.0	PD
TIMESET2	20.0	MIN
TIMEREM2	20.0	MIN
MBUS	: :	ENABLED
SPUMP1	: :	ON
SPUMP2	: :	OFF
SPUMP3	: :	OFF
ALLOFF	: :	
SQSPRA	: :	OFF
SPRAY1	: :	OFF
SPRAY2	: :	OFF
FL HD1	-0.338	GPM
FL HD2	6.640	GPM
RELHUM	92.0	PCT
AIRTEM	-10.5	C
TDEW		C
SPD A	237	RPM
FBR VIBS	0.07	IN/S
RBR VIBS	0.06	IN/S

MENU

HTD TURNING VANES

TOP	-10.7	C
MID	-11.0	C
BOT	-11.3	C

TOP	-10.6	C
MID	-10.0	C
BOT	-10.1	C

C11	-8.5	C
C12	-8.8	C
C21	-8.5	C
C22	-9.2	C
C31	-8.7	C
C32	-9.0	C
C41	-9.2	C
C42	-9.2	C
C51	-8.4	C
C52	-8.7	C
C61	-8.4	C
C62	-8.9	C
C71	-8.8	C
C72	-8.8	C
C81	-8.5	C
C82	-8.9	C

D11		C
D12	-10.7	C
D13	-10.7	C
D21		C
D22	-10.6	C
D23	-10.5	C
D31		C
D32	-10.6	C
D33	-10.8	C
D41		C
D42	-10.5	C
D43	-10.5	C
D51		C
D52	-10.7	C
D53	-10.7	C
D61		C
D62	-10.6	C
D63	-10.5	C
D71		C
D72	-10.6	C
D73	-10.6	C
D81		C
D82	-10.7	C
D83	-10.6	C

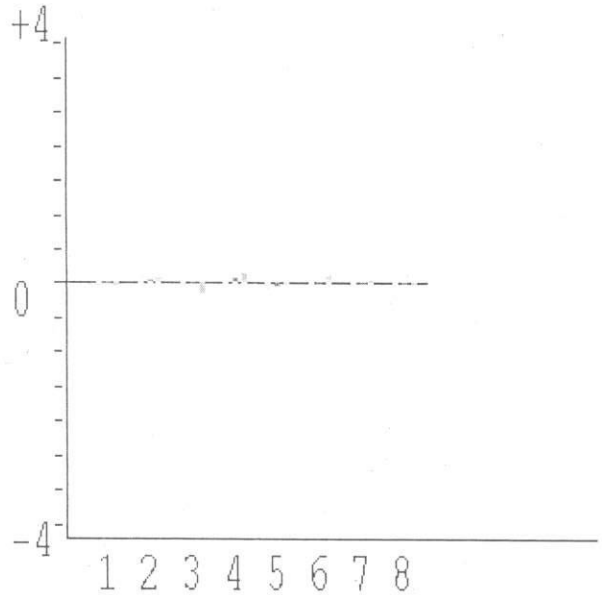

MODULE

DTEMPS

224 RPM

HXTC51	-12	C
TUNNEL DOOR	CLOSED	
OUTSIDE AIR	9	C
LIQ PMP1 DP	11	PSID

W1 Graphics Window

Print

N VEL.	149.7	KNOTS
	172.3	MPH
S VEL.	150.0	KNOTS
	172.8	MPH
AVG V	149.9	KNOTS
	172.6	MPH
AVG T E		C
W	-10.6	C
POWER	0.55	MWATT
ENTER TUNN	NO	
AIR SP	20.0	PG
WTRDPSP1	25.0	PD
TIMESET1	0.50	MIN
TIMEREM1	0.5	MIN
WTRDPSP2	75.0	PD
TIMESET2	20.0	MIN
TIMEREM2	20.0	MIN
MBUS : :	ENABLED	
SPUMP1 : :	ON	
SPUMP2 : :	OFF	
SPUMP3 : :	OFF	
ALLOFF : :		
SQSPRA : :	OFF	
SPRAY1 : :	OFF	
SPRAY2 : :	OFF	
FL HD1	-0.338	GPM
FL HD2	6.574	GPM
RELHUM	91.5	PCT
AIRTEM	-10.6	C
TDEW		C
SPD A	237	RPM
FBR VIBS	0.08	IN/S
RBR VIBS	0.07	IN/S

7001

2007

MENU

DIA 3000

STATUS

COMPRESSOR NO. :
CURRENT, AMPS:
COND. PRES, PSIG:
OIL PRES, PSIG:
COND WTR TEMP, F:

AUXILIARY PMP :	OFF	OFF	OFF	ON	ON	ON	ON	ON
BYPASS :								
STATUS :	ON	ON	ON	OFF	OFF	OFF	OFF	OFF

7 P PSIA
S PSIA
O %
MAN

SUCTION HEADER

PSIA
F

O % AUTO | O % AUTO | O % AUTO | O % AUTO | O % AUTO | O % AUTO

MODE: TEMP

8 P PSIA
S PSIA
O %
MAN

FLASH COOLER

LVL INCH

PSIA

PUMP #2 PRESS

P

PSIG

5 OFF

TOP C
MID C
BOT C
STEAM 0 %

IRT

FAN RPM

AVG TEMP C F

SPRAY1 OFF
SPRAY2 OFF

PUMP #1 PRESS

P

PSIG

6 ON

MODE: REFRIG

1 MAN REFRIGERATION

3000

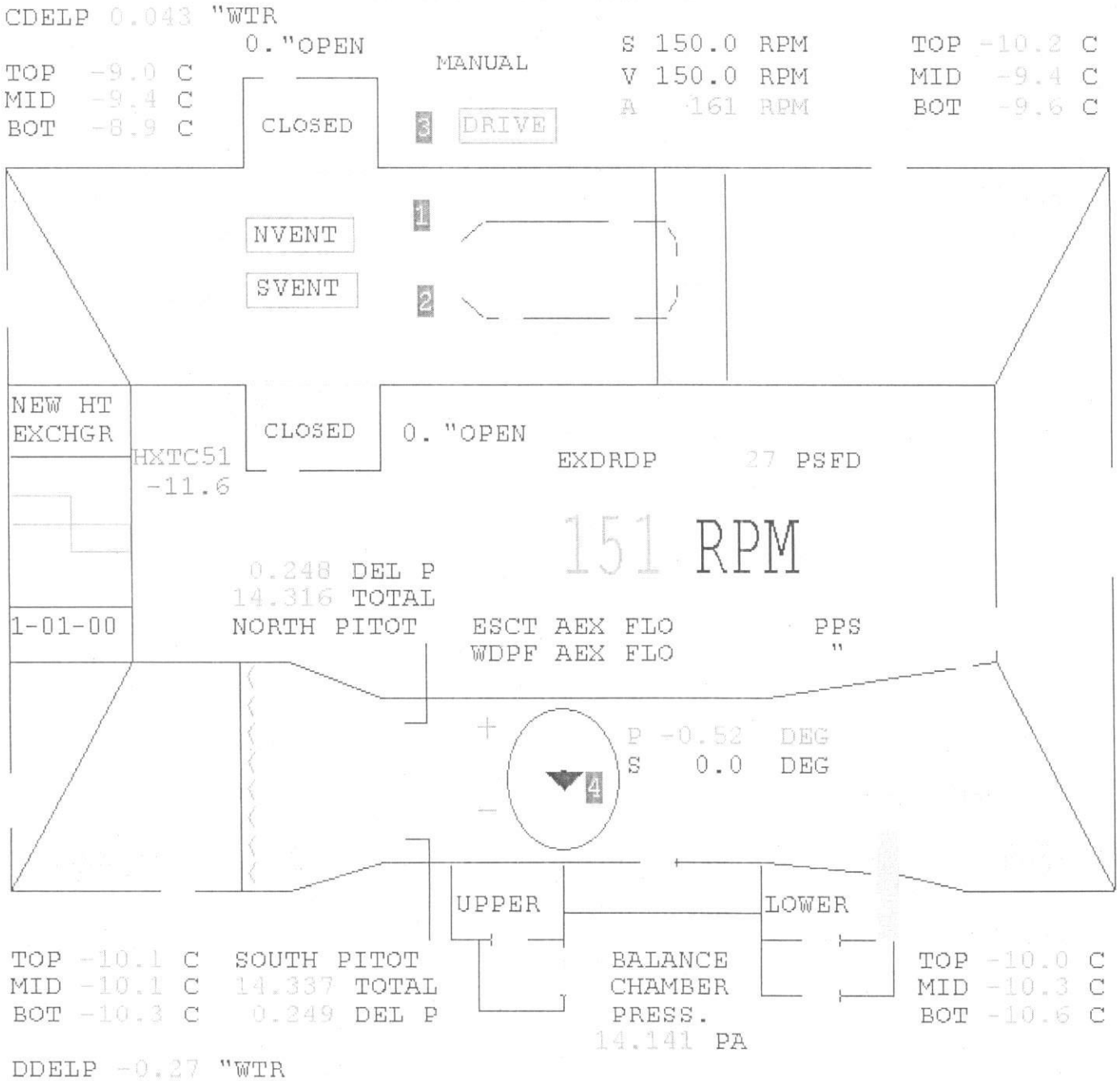
CDELP 0.043 "WTR
0."OPEN
MANUAL
S 150.0 RPM
V 150.0 RPM
A 161 RPM
TOP -10.2 C
MID -9.4 C
BOT -9.6 C
TOP -9.0 C
MID -9.4 C
BOT -8.9 C
CLOSED
3
DRIVE
1
NVENT
SVENT
2
NEW HT
EXCHGR
HXTC51
-11.6
CLOSED
0."OPEN
EXDRDP 27 PSFD
151 RPM
0.248 DEL P
14.316 TOTAL
NORTH PITOT
ESCT AEX FLO
WDPF AEX FLO
PPS
"
1-01-00
+
P -0.52 DEG
S 0.0 DEG
4
-
UPPER
LOWER
TOP -10.1 C
MID -10.1 C
BOT -10.3 C
SOUTH PITOT
14.337 TOTAL
0.249 DEL P
BALANCE
CHAMBER
PRESS.
14.141 PA
TOP -10.0 C
MID -10.3 C
BOT -10.6 C
DDELP -0.27 "WTR
8 STOP MOTOR

2001

MENU

COMPRESSOR NO. :
CURRENT, AMPS :
COND. PRES, PSIG:
POWER, MWATTS :

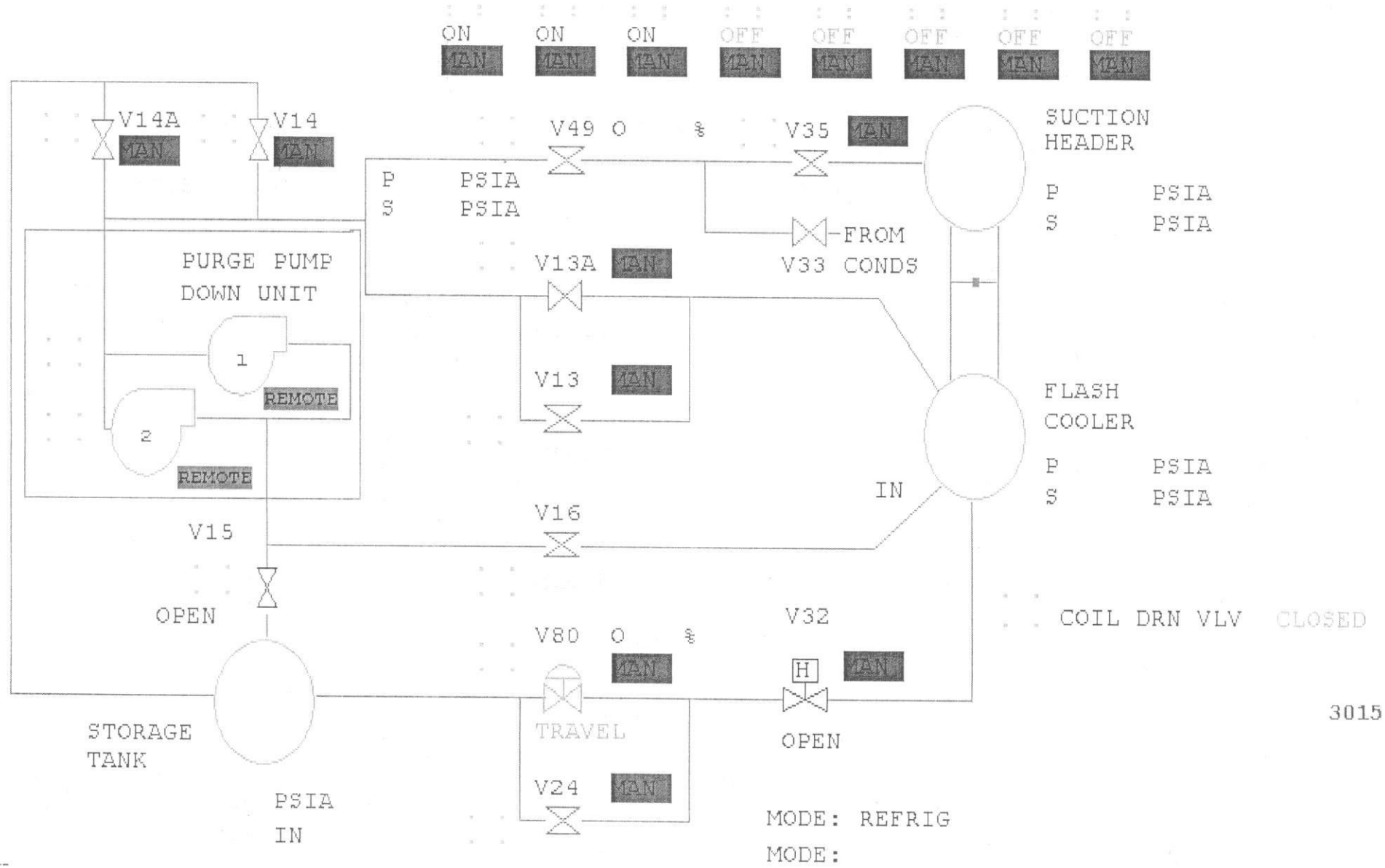

3015

	1	2	3	4	8	9	10	11
MTR CURR	AMP	AMP	AMP	AMP	AMP	AMP	AMP	AMP
MTR PWR	MW	MW	MW	MW	MW	MW	MW	MW
CONDSR PRES	PSIG	PSIG	PSIG	PSIG	PSIG	PSIG	PSIG	PSIG
AUX OIL PMP	OFF	OFF	OFF	ON	ON	ON	ON	ON
LUBE OIL PRESS	PSIG	PSIG	PSIG	PSIG	PSIG	PSIG	PSIG	PSIG
HGBYPS V21	/ MAN	/ MAN	OPEN/ MAN	MAN				
HG ISOL VLV	OPEN	OPEN	OPEN	OPEN				
ECONOMIZER V18	/ MAN	/ MAN	/ MAN	/ MAN	/ MAN	/ MAN	/ MAN	/ MAN
COND PURGE VLV	OPEN/ MAN	OPEN/ MAN	OPEN/ MAN	OPEN/ MAN	OPEN/ MAN	OPEN/ MAN	OPEN/ MAN	OPEN/ MAN
ECONO ISOL VLV	OPEN	OPEN	OPEN	OPEN	OPEN	OPEN	OPEN	OPEN
COMP INLT VLV	OPEN	OPEN	OPEN	OPEN	OPEN	OPEN	OPEN	OPEN
REAR BRG	F	F	F	F	F	F	F	F
SEAL BRG	F	F	F	F	F	F	F	F
THRUST BRG	F	F	F	F	F	F	F	F
LUBE OIL	159 F	F	F	F	F	F	F	F
MTR GEAR	F	F	F	F	F	F	F	F
PINION GEAR	F	F	F	F	F	F	F	F
GEAR BOX OIL	F	F	F	F	F	F	F	F
MTR BRG INB	F	F	F	F	F	F	F	F
MTR BRG OUTB	F	F	F	F	F	F	F	F
COND CTWR	F	F	F	F	F	F	F	F
COND WTR FLW SW	FLOW	FLOW	FLOW	FLOW	FLOW	FLOW	FLOW	FLOW
INSPEC DATE	04/98	02/97	03/98	02/98	02/97	07/99	08/99	12/99
COMP STARTS TTL	MINS	MINS	MINS	MINS	MINS	MINS	MINS	MINS
COMP RUN TTL	MINS	MINS	MINS	MINS	MINS	MINS	MINS	MINS

HTD TURNING VANES

TOP	-10.1	C
MID	-10.4	C
BOT	-10.7	C

TOP	-10.1	C
MID	-9.5	C
BOT	-9.7	C

C11	-8.7	C
C12	-9.0	C
C21	-8.6	C
C22	-9.3	C
C31	-8.7	C
C32	-9.1	C
C41	-9.3	C
C42	-9.2	C
C51	-8.5	C
C52	-8.7	C
C61	-8.5	C
C62	-8.9	C
C71	-8.7	C
C72	-8.9	C
C81	-8.9	C
C82	-8.8	C

D11		C
D12	-10.2	C
D13	-10.2	C
D21		C
D22	-10.1	C
D23	-10.1	C
D31		C
D32	-10.2	C
D33	-10.4	C
D41		C
D42	-10.1	C
D43	-10.1	C
D51		C
D52	-10.4	C
D53	-10.3	C
D61		C
D62	-10.3	C
D63	-10.2	C
D71		C
D72	-10.3	C
D73	-10.2	C
D81		C
D82	-10.4	C
D83	-10.4	C

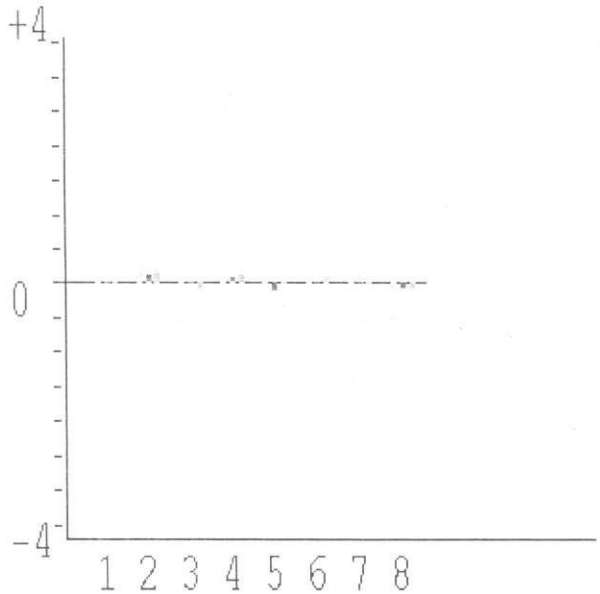

MODULE

DTEMPS

151 RPM

HXTC51	-11	C
TUNNEL DOOR	CLOSED	
OUTSIDE AIR	9	C
LIQ PMP1 DP	11	PSID

W1 Graphics Window

Print

N VEL.	99.6	KNOTS
	114.7	MPH
S VEL.	99.7	KNOTS
	114.8	MPH
AVG V	99.7	KNOTS
	114.7	MPH
AVG T E		C
W	-10.2	C
POWER	0.15	MWATT
ENTER TUNN	NO	
AIR SP	20.0	PG
WTRDPSP1	25.0	PD
TIMESET1	0.50	MIN
TIMEREM1	0.5	MIN
WTRDPSP2	75.0	PD
TIMESET2	20.0	MIN
TIMEREM2	20.0	MIN
MBUS	: :	ENABLED
SPUMP1	: :	ON
SPUMP2	: :	OFF
SPUMP3	: :	OFF
ALLOFF	: :	
SQSPRA	: :	OFF
SPRAY1	: :	OFF
SPRAY2	: :	OFF
FL HD1	-0.338	GPM
FL HD2	6.557	GPM
RELHUM	90.6	PCT
AIRTEM	-9.9	C
TDEW		C
SPD A	161	RPM
FBR VIBS	0.07	IN/S
RBR VIBS	0.08	IN/S