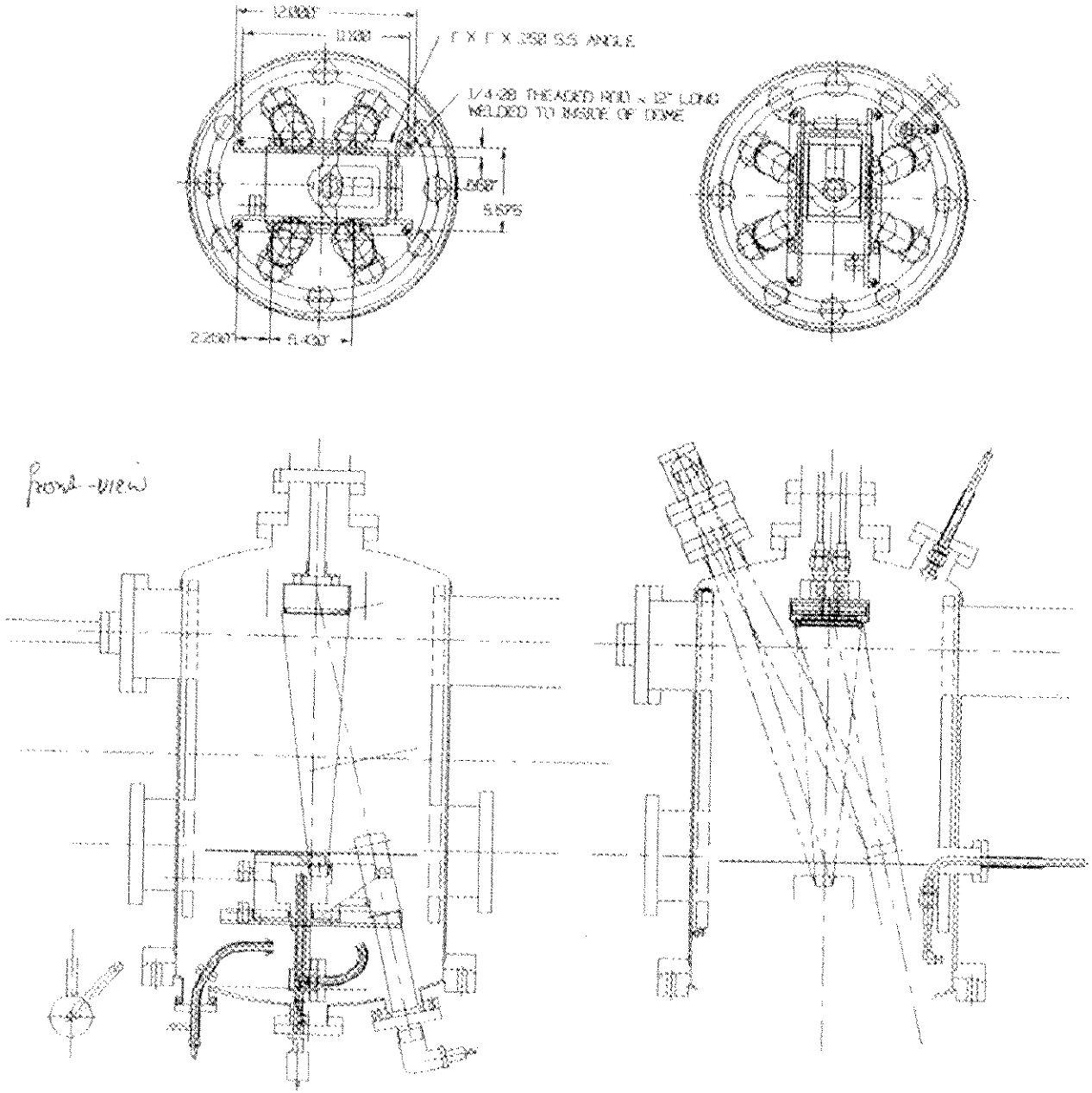

NO.	DESCRIPTION	QTY
X	X	1
X	X	1

NO.	DATE	DESCRIPTION	REV	CHK	APP
		REVISIONS			

REFER. 2034

THIRD ANGLE PROJECTION

ALL DIMENSIONS ARE IN INCHES

TOLERANCES UNLESS OTHERWISE SPECIFIED

LINEAR DIMENSIONS	ANGULAR DIMENSIONS	SURFACE ROUGHNESS
±.010	±0.5°	63

SCALE

APX SCIENTIFIC INSTRUMENTS

DRN CW

CHD

APP

TITLE

BASE FLANGE LAYOUT

DATE DEC 95

DWG NO. 0000702

SHEET 1 OF 1

REV B

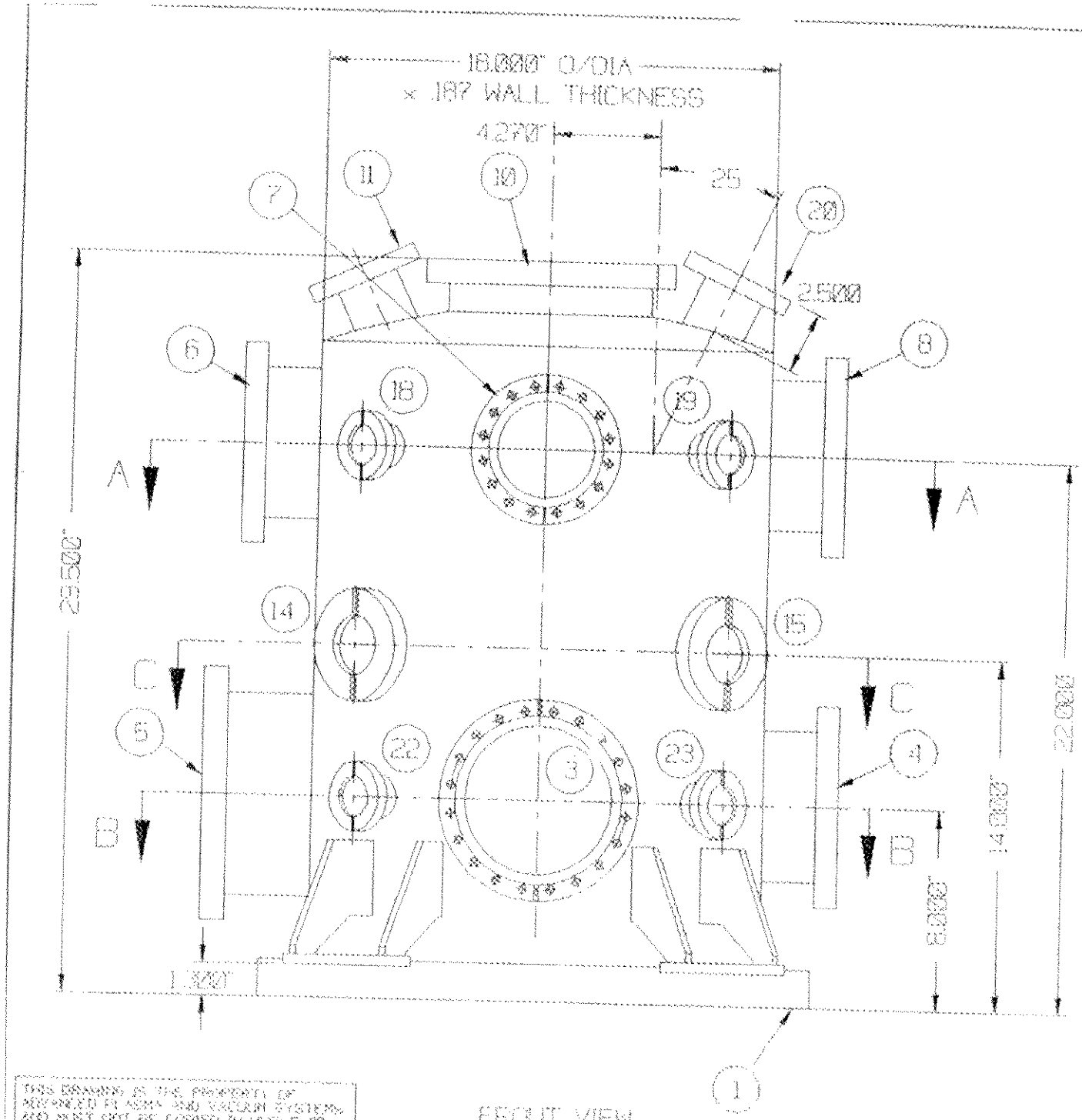

FRONT VIEW

NO		DESCRIPTION	QTY
1	[illegible]	[illegible]	1
2	[illegible]	[illegible]	1
3	[illegible]	[illegible]	1
4	[illegible]	[illegible]	1
5	[illegible]	[illegible]	1
6	[illegible]	[illegible]	1
7	[illegible]	[illegible]	1
8	[illegible]	[illegible]	1
9	[illegible]	[illegible]	1
10	[illegible]	[illegible]	1
11	[illegible]	[illegible]	1
12	[illegible]	[illegible]	1
13	[illegible]	[illegible]	1
14	[illegible]	[illegible]	1
15	[illegible]	[illegible]	1
16	[illegible]	[illegible]	1
17	[illegible]	[illegible]	1
18	[illegible]	[illegible]	1
19	[illegible]	[illegible]	1
20	[illegible]	[illegible]	1
21	NO FLANGE		1
22	[illegible]	[illegible]	1
23	[illegible]	[illegible]	1
24	[illegible]	[illegible]	1
25	[illegible]	[illegible]	1

REV	DATE	CHANGE POINTS DESCRIPTION REQUESTS	REQ'D BY	APPD BY
1	[illegible]			
2	[illegible]			

REF: J 2804

THIRD ANGLE PROJECTION

ALL DIMENSIONS ARE IN INCHES

TOLERANCES UNLESS OTHERWISE SPECIFIED

SCALE	LINEAR DIMENSIONS	ANGULAR DIMENSIONS	SURFACE FINISHING
	.000	±0.5°	32

ADVANCED PLASMA & VACUUM SYSTEMS

DRN: CW	TITLE: UHV DEPOSITION CHAMBER
CHK:	
APP:	
DATE: JAN 1995	DWG NO: 0000[illegible] REV: 0

THIS DRAWING IS THE PROPERTY OF ADVANCED PLASMA AND VACUUM SYSTEMS AND MUST NOT BE COPIED IN WHOLE OR IN PART WITHOUT WRITTEN PERMISSION OF ADVANCED PLASMA AND VACUUM SYSTEMS