SEE SHEET 1 FOR REVISIONS

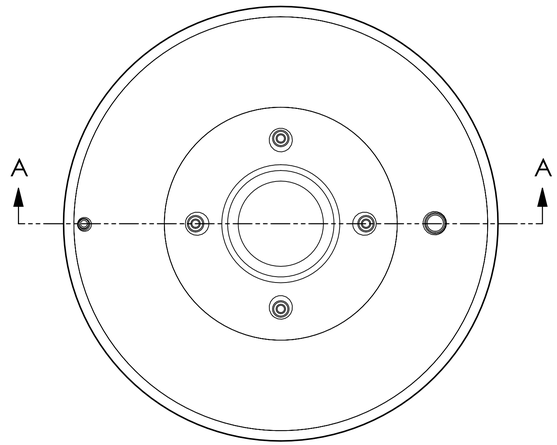

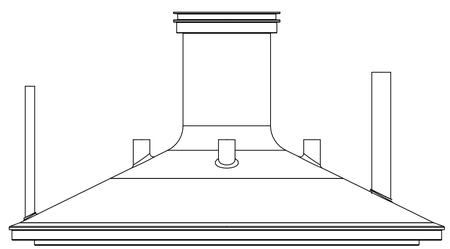

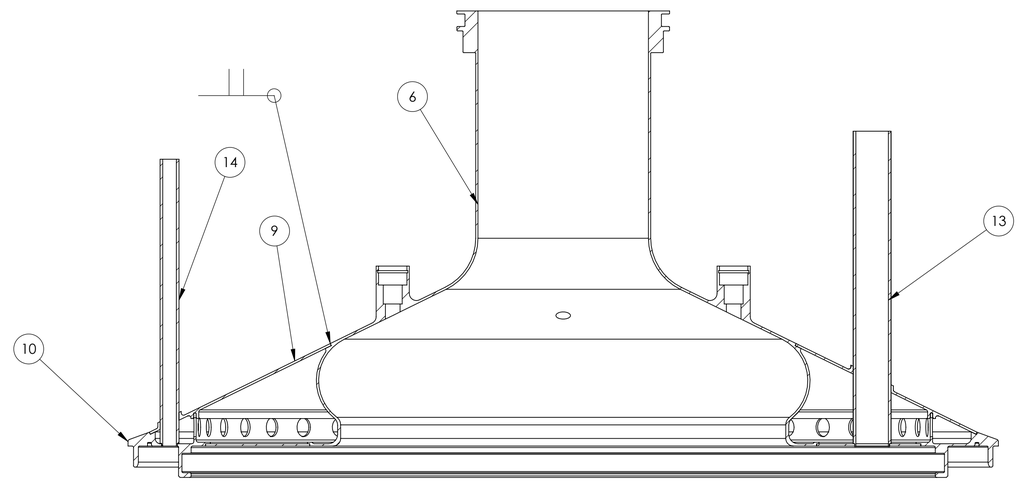

SECTION A-A
SCALE 1 : 1

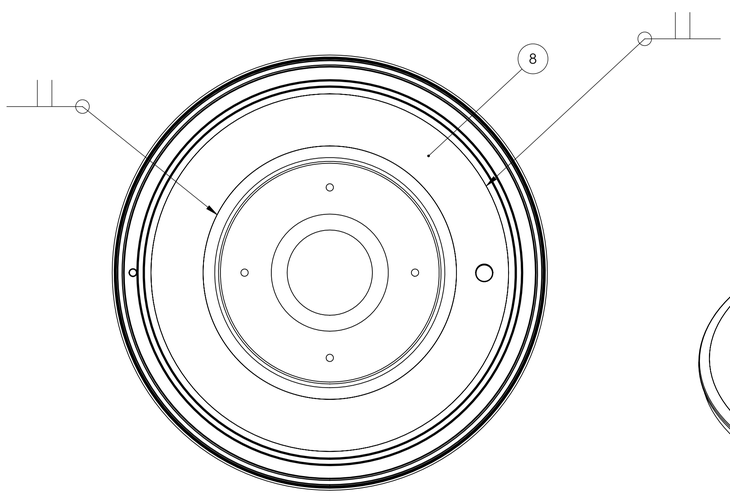

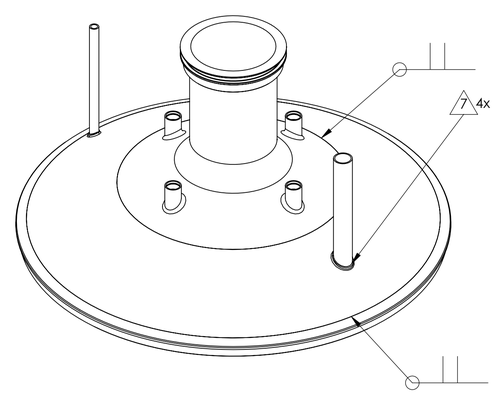

-2 OUTLET COVER WELDMENT
DIMENSIONS SHOWN ON -1 APPLY

QTY REQ'D PER ASSY				CAGE CODE	PART OR IDENTIFYING NO.	DESCRIPTION/NOMENCLATURE	MATERIAL SPECIFICATION	ZONE	ITEM NO.
									28
									27
									26
									25
									24
									23
									22
									21
									20

PARTS LIST

SIZE	CAGE CODE		REV
D	25307	A339-0901-M006	-
SCALE: AS NOTED		INDEX DATE 98-06-18 SHEET 2 OF 2	

FILE NAME: M000.SLDDRW

MAT2 1-94