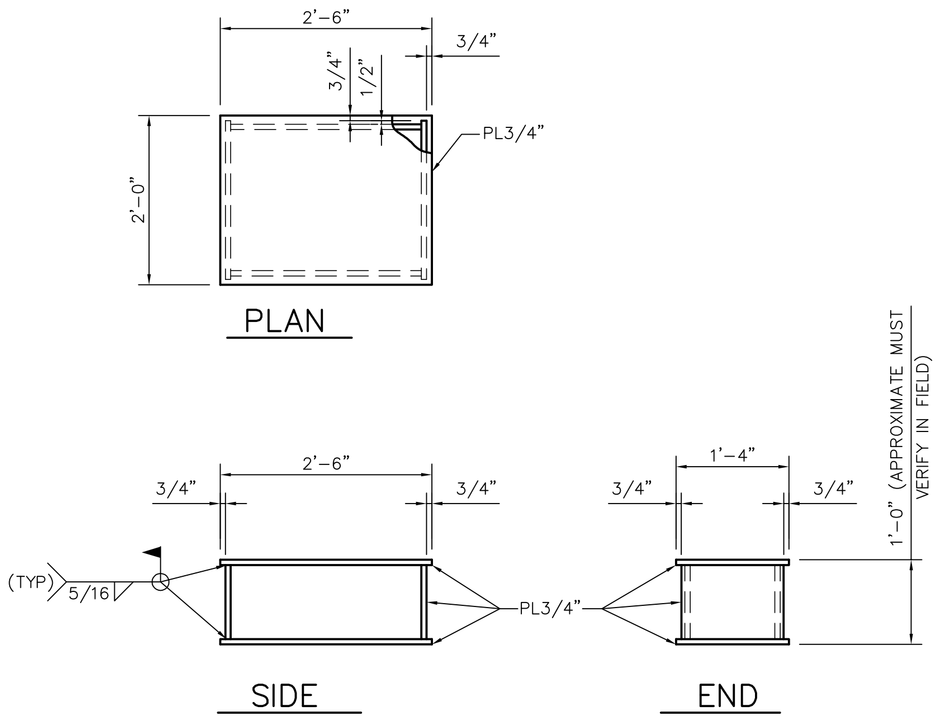

SPACER DETAIL "1"

SCALE 3/4" = 1'-0"

MATERIAL: ASTM A36 STEEL

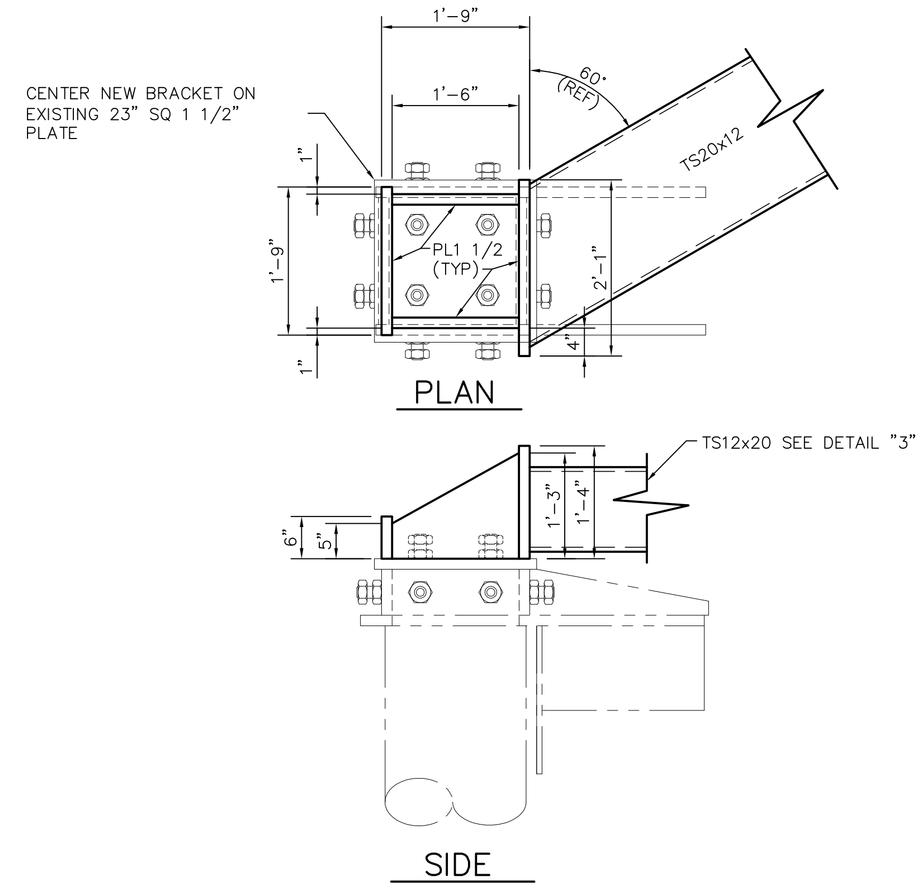

SUPPORT BRACKET DETAIL "2"

SCALE 3/4" = 1'-0"

MATERIAL: ASTM A36 STEEL 1 1/2" THICK

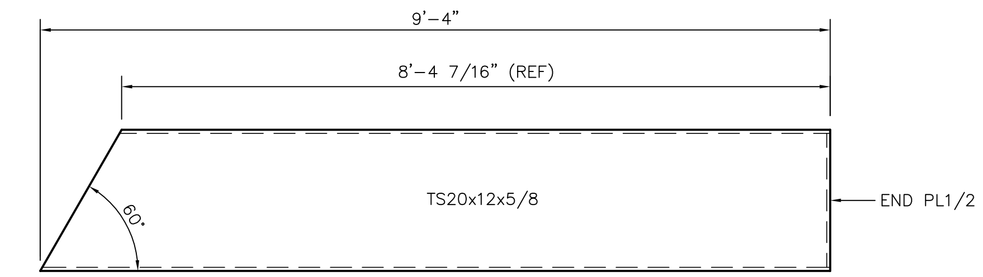

STRUCTURAL TUBE BRACE DETAIL "3"

SCALE 3/4" = 1'-0"

MATERIAL: ASTM A36 STEEL

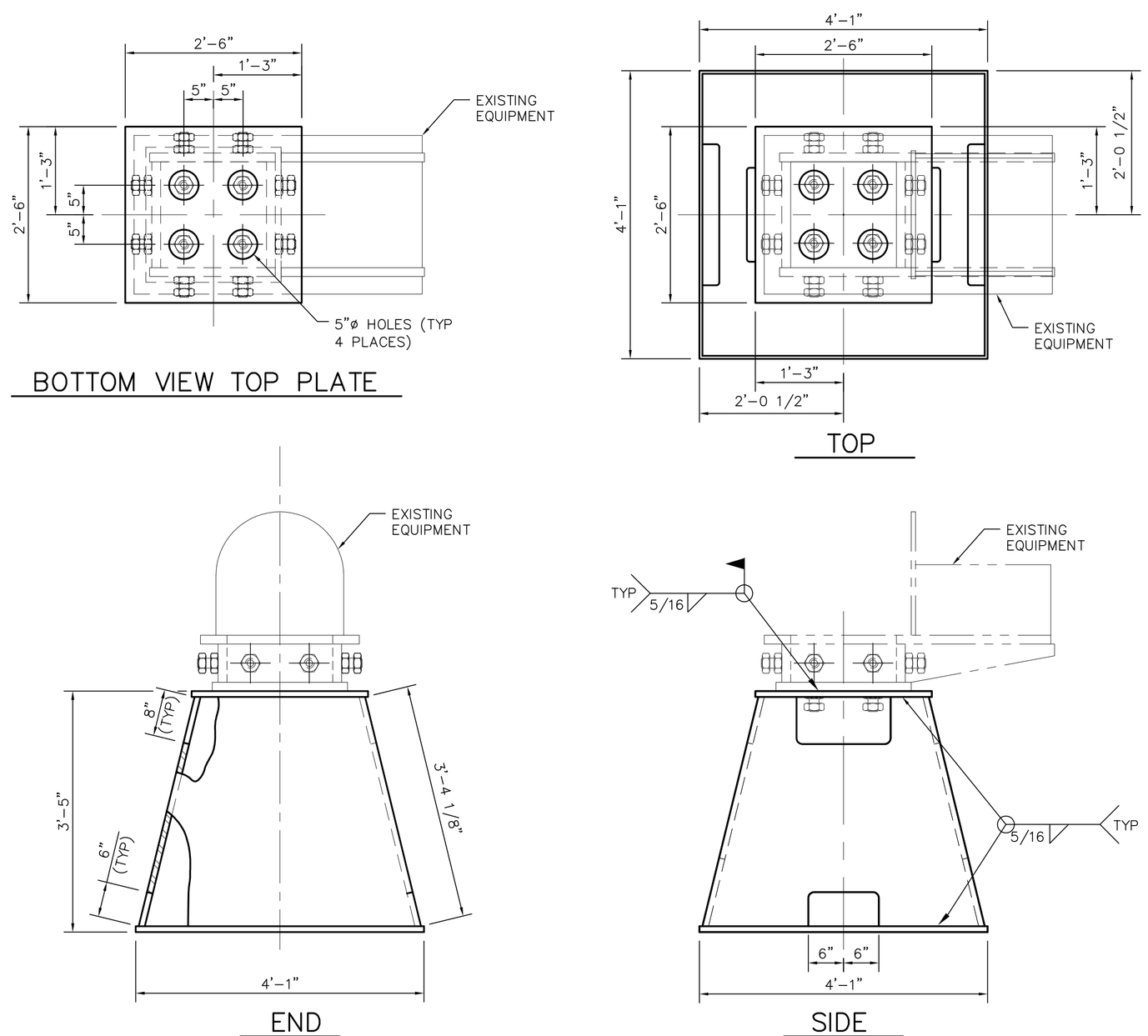

NEW BASE FRAME DETAIL "4"

SCALE 3/4" = 1'-0"

MATERIAL: ASTM A36 STEEL 1" THICK

DRAWING No.	REF DRAWING	REV.	DATE	REVISION	REV. BY	CHECKED	APPROVED
070275-S-002	ELEVATIONS						
070275-S-001	PLAN, SECTION AND NOTES	0	8/22/07	ISSUED FOR CONSTRUCTION	WC	RG	

KEY ENGINEERING, INC.
The key to your engineering solutions
P.O. BOX 1725
DECATUR, AL 35602
PH: (256) 351-1350
FAX: (256) 351-1360

TITLE REDSTONE ARSENAL BUILDING 4707
AUTOCLAVE DOOR SUPPORT MODIFICATIONS
MISC. STRUCTURAL DETAILS

DWN WC | SCALE Shown | DATE 8/9/2007
CHKD Roy Germash | SHEET 070275-S-003 | REV. 0
APPR