HVAC LEGEND

SYMBOL DOUBLE LINE	SYMBOL SINGLE LINE	DESCRIPTION
20x12	20x12	DUCTWORK (SIZE INDICATED)
20x12	20x12(L)	ACOUSTICALLY LINED DUCT (SIZE INDICATED): INSTALL LINING WHERE SPECIFIED, AND WHERE SHOWN ON PLANS
R	R	DUCT RISE IN DIRECTION OF AIR FLOW
D	D	DUCT DROP IN DIRECTION OF AIR FLOW
		FLEXIBLE DUCT CONNECTION
		RADIUS ELBOW: MINIMUM RADIUS = 1.5 x DUCT WIDTH
		DUCT ELBOW (90°) WITH TURNING VANES
		BRANCH TAKE- OFF
AP		ACCESS PANEL OR DOOR
VD	VD	MANUAL VOLUME DAMPER
VD	VD	MANUAL VOLUME DAMPER WITH CONCEALED REGULATOR
FSD	FSD	COMBINATION FIRE AND SMOKE DAMPER WITH DUCT DETECTOR AND HINGED ACCESS PANEL
FD	FD	FIRE DAMPER WITH HINGED ACCESS PANEL
MD	MD	MOTORIZED DAMPER
200 8ø	200 8ø	CEILING SUPPLY AIR DIFFUSER OR REGISTER (RECTANGULAR OR SQUARE) (AIR FLOW AND NECK SIZE INDICATED) (ARROWS INDICATED NUMBER AND DIRECTION OF BLOWS)
200 8ø	200 8ø	CEILING RETURN OR EXHAUST REGISTER (AIR FLOW AND NECK SIZE INDICATED)
BDD	BDD	BACKDRAFT DAMPER
		FLEXIBLE ROUND DUCT
		SUPPLY AIR OR OUTSIDE AIR DUCT SECTION
		RETURN AIR OR EXHAUST AIR DUCT SECTION
		SUPPLY AIR OR OUTSIDE AIR DUCT DOWN
		RETURN AIR OR EXHAUST AIR DUCT DOWN
		RECTANGULAR TO ROUND TRANSITION
SD		DUCT OR EQUIPMENT SMOKE DETECTOR WITH DUCT ACCESS PANEL
CFM / SIZE		SIDEWALL SUPPLY REGISTER OR GRILLE (AIR FLOW AND NECK SIZE INDICATED)
CFM / SIZE		SIDEWALL RETURN OR EXHAUST REGISTER GRILLE (AIR FLOW AND NECK SIZE INDICATED)

SYMBOL	DESCRIPTION
	ROOF EXHAUST FAN OR GRAVITY VENTILATOR
P / F	PRE-FILTER
F / F	FINAL FILTER
C / C	COOLING COIL
H / C	HEATING COIL
	FAN OR PUMP
	LOUVER
	HUMIDIFIER
	SOUND TRAP

CONTROL LEGEND

SYMBOL	DESCRIPTION
—— A ——	CONTROL AIR SUPPLY
- - - - - -	ELECTRICAL WIRING
M	CONTROL AIR MAIN
E	ELECTRICAL POWER CONNECTION
D	DATA CABLE LINK (BLN OR FLN)
M	ELECTRICAL MOTOR
MS	MOTOR STARTER BY DIV. 23
CB	SHUNT TRIP CIRCUIT BREAKER
VFD	VARIABLE FREQUENCY DRIVE
DS	ELECTRICAL DISCONNECT SWITCH
HOA	MANUAL HAND-OFF-AUTOMATIC SWITCH
BPT	MANUAL BYPASS TIMER
DM	AUTOMATIC DAMPER MOTOR (ACTUATOR)
ΔP	DIFFERENTIAL PRESSURE SENSOR
DPS	DIFFERENTIAL PRESSURE SWITCH
SP	DUCT STATIC PRESSURE SENSOR
FS	FLOW SENSOR
AFS	AIR FLOW SWITCH
CS	CURRENT SENSOR (TRANSFORMER)
ES	END SWITCH
R	CONTROL RELAY
S	MANUAL SWITCH
V	VELOCITY SENSOR
CS	CURRENT SENSOR
M	AUTOMATIC CONTROL VALVE (2-WAY)
M	AUTOMATIC CONTROL VALVE (2-WAY)
M	AUTOMATIC CONTROL VALVE (3-WAY)
T	DRY BULB TEMPERATURE SENSOR (WALL MOUNT)
T	DRY BULB TEMPERATURE SENSOR
H	RELATIVE HUMIDITY SENSOR
T	DUCT TEMPERATURE SENSOR
H	DUCT HUMIDITY SENSOR OR HUMIDISTAT
T	WATER TEMPERATURE SENSOR IN WELL
SD	DUCT SMOKE DETECTOR
XFMR	STEP-DOWN CONTROLS TRANSFORMER
FACP	FIRE ALARM CONTROL PANEL
DI	FMCS DIGITAL INPUT
DO	FMCS DIGITAL OUTPUT
AI	FMCS ANALOG INPUT
AO	FMCS ALALOG OUPUT
AFM	AIR FLOW MEASURING STATION
BB	BLACK BULB TEMPERATURE SENSOR (OPERATIVE "COMFORT" TEMPERATURE)
RG	RED LIGHT / GREEN LIGHT INDICATOR
PC (P)	PHOTO CELL (PERIMETER ZONE)
PC (I)	PHOTO CELL (INTERIOR ZONE)
	INTERIOR WINDOW BLIND
LT	LEAK DETECTION TAPE (LOCATE ON CRCP PIPE TAILS)
CO_2	CARBON DIOXIDE SENSOR (2% ACCURACY). MOUNT AT 5' AFF
DPT	DEW POINT TEMPERATURE SENSOR
R	RADIOMETER
R	REFRIGERANT LEAK DETECTION SENSOR

PIPING LEGEND

SYMBOL	DESCRIPTION
	LEVEL CONTROL VALVE / FLOAT VALVE
	PRESSURE CONTROL VALVE (SELF-CONTAINED)
	PRESSURE RELIEF OR SAFETY RELIEF VALVE
	PRESSURE REGULATING VALVE
M	MOTOR OPERATED BUTTERFLY VALVE
M	MOTOR OPERATED VALVE (2-WAY)
M	MOTOR OPERATED VALVE (3-WAY)
M	SOLENOID OPERATED VALVE
	TRIPLE DUTY VALVE
	BUTTERFLY VALVE
	ANGLE VALVE
	STRAINER WITH BLOWDOWN COCK AND HOSE ADAPTOR
	GATE VALVE
	BALL VALVE
	GLOBE VALVE
	CHECK VALVE
	SHUT-OFF COCK
	CALIBRATED BALANCING VALVE (CIRCUIT SETTER)
FLV	AUTOMATIC FLOW LIMITING VALVE (PRESSURE INDEPENDENT)
FLV	AUTOMATIC FLOW LIMITING VALVE WITH READOUT PORTS (CIRCUIT SENTRY)
AFLV	ADJUSTABLE AUTOMATIC FLOW LIMITING VALVE WITH PRESSURE PORTS (ULTRASET)
	PUMP
	EXPANSION JOINT
	FLOW DIRECTION
	WELD CAP
	SCREW CAP
	UNION
	FLANGE CONNECTION (BOLTED)
	PIPE ANCHOR
	PIPE GUIDE
	SLOPE DOWN IN DIRECTION OF ARROW
	TEE DOWN
	TEE UP
	ELBOW DOWN
	ELBOW UP
	TOP BRANCH CONNECTION
	BOTTOM BRANCH CONNECTION
AVA	AIR VENT (AUTOMATIC)
AVM	AIR VENT (MANUAL)
P	PRESSURE GAUGE
	THERMOMETER
	PRESSURE & TEMPERATURE TEST PORT
	WAFER ORIFACE PLATE FOR FLOW MEASUREMENT

SYMBOL	DESCRIPTION
CHS	CHILLED WATER SUPPLY
CHR	CHILLED WATER SUPPLY
GWS	GEOTHERMAL WATER SUPPLY
GWR	GEOTHERMAL WATER RETURN
HWS	HEATING WATER SUPPLY
HWR	HEATING WATER RETURN
DCW	DOMESTIC COLD WATER
MU	MAKE-UP WATER
CD	CONDENSATE DRAIN
D	DRAIN
	FLEXIBLE PIPE OR HOSE:, BRAIDED
	FLEXIBLE PIPE CONNECTION, SPHERE
	PIPE REDUCER (CONCENTRIC)
	PIPE REDUCER (ECCENTRIC)
	POINT OF CONNECTION
	POINT OF DISCONNECTION
	SPACE TEMPERATURE SENSOR
	EXISTING PIPE TO BE REMOVED
	EXISTING PIPE TO REMAIN
	DIAGRAM OR DETAIL NOTE REFERENCE

PROJECT STATUS

BID SET 04/30/09

ISSUE

MARK	DATE	DESCRIPTION	INITIAL

		DATE
DRAWN	J HO	
DESIGNED	M CALLAHAN	
CHECKED	S PAINTER	
PROJMGR	J GRANT	
REQUESTOR	R SCHULER	
R&QA		
SAFETY		
SUPERVISOR	S FRANKEL	

Ames Research Center
Moffet Field, California

N232 COLLABORATIVE SUPPORT FACILITY
MECHANICAL
LEGENDS AND SYMBOLS

SIZE	CAGE CODE		REV
D	25307	A232-0800- M001	

SCALE | INDEX | SHEET OF

DWG: R:\232\W232 Collaborative Support Facility\500_CAD\CAD\Drawings\M001.dwg User: jlho
DATE: Apr 30, 2009 - 1:19:03 pm Images:
Xrefs: 7KBDR-SHORT

ABBREVIATIONS

@	AT
&	AND
AABC	ASSOCIATED AIR BALANCING COUNCIL
ACU	AIR CONDITIONING UNIT
ACCU	AIR COOLED CONDENSING UNIT
ACR	AIR CONDITIONING & REFRIGERATION
AD	ACCESS DOOR
AF	AIRFOIL FAN WHEEL
AFF	ABOVE FINISH FLOOR
AMP	AMPERE
APD	AIR PRESSURE DROP (IN–WG)
APPROX	APPROXIMATE
ARCH	ARCHITECTURAL
AS	AIR SEPARATOR
ASCS	AMES STANDARD CONSTRUCTION SPECIFICATION
ASHRAE	AMERICAN SOCIETY OF HEATING VENTILATING & AIR CONDITIONING ENGINEERS
ASME	AMERICAN SOCIETY OF MECHANICAL ENGINEERS
ASTM	AMERICAN SOCIETY FOR TESTING AND MATERIALS
AUTO	AUTOMATIC
AX	AXIAL FAN
AVA	AIR VENT (AUTOMATIC)
AVM	AIR VENT (MANUAL)
AWG	AMERICAN WIRE GUAGE
BFP	BACKFLOW PREVENTER ASSEMBLY
BFV	BUTTERFLY VALVE
BHP	BRAKE HORSEPOWER
BI	BACKWARD INCLINED FAN WHEEL
BLDG	BUILDING
BLN	BUILDING LAN NETWORK CABLE
BOD	BOTTOM OF DUCT
BOP	BOTTOM OF PIPE
BT	BUFFER TANK
BP	BEAM PENETRATION
BPD	BY–PASS ZONE DAMPER
BTUH	BRITISH THERMAL UNITS PER HOUR
CD	CONDENSATE DRAIN
CFC	CALIFORNIA FIRE CODE
CFF	CAP FOR FUTURE CONNECTION
CFM	CUBIC FEET PER MINUTE
CHR	CHILLED WATER RETURN
CHS	CHILLED WATER SUPPLY
CMC	CALIFORNIA MECHANICAL CODE
CO2	CARBON DIOXIDE
CONC	CONCRETE
COND	CONDENSATE
CONN	CONNECTION
CONT	CONTINUATION
COP	COEFFICIENT OF PERFORMANCE
COTR	CONTRACTING OFFICER'S TECHNICAL REPRESENTATIVE
CP	CONDENSATE PUMP
CPC	CALIFORNIA PLUMBING CODE
CPF	CHEMICAL POT FEEDER
CRCP	CEILING RADIANT COOLING PANEL
C&S	CORE & SHELL
DB	DRY BULB
DCW	DOMESCTIC COLD WATER
DDC	DIRECT DIGITAL CONTROL
DEFL	DEFLECTION
DET	DETAIL
DIA	DIAMETER
DN	DOWN
DSD	DUCT SMOKE DETECTOR
DOAS	DEDICATED OUTSIDE AIR SYSTEM
DWG	DRAWING
DX	DIRECT EXPANSION
(E)	EXISTING
EA	EACH
EAT	ENTERING AIR TEMPERATURE
EER	ENERGY EFFICIENCY RATIO
EF	EXHAUST FAN
EDB	ENTERING DRY BULB TEMPERATURE
EFF	EFFICIENCY
EL	ELEVATION
ELEC	ELECTRICAL
ENT	ENTERING
EQUIP	EQUIPMENT
ESP	EXTERNAL STATIC PRESSURE
ET	EXPANSION TANK
EWB	ENTERING WET BULB TEMPERATURE
EWT	ENTERING WATER TEMPERATURE
°F	DEGREES FAHRENHEIT
FA	FROM ABOVE
FACP	FIRE ALARM CONTROL PANEL
FB	FROM BELOW
FC	FLEXIBLE DUCT CONNECTION
FC	FORWARD CURVED FAN WHEEL
FC	FOOT CANDLE
FD	FIRE DAMPER
FIN	FINISHED
FLEX	FLEXIBLE
FLA	FULL LOAD AMPERE
FLR	FLOOR
FLN	FIELD LAN NETWORK CABLE
FMCS	FACILITY MANAGEMENT CONTROL SYSTEM
FPM	FEET PER MINUTE
FSD	FIRE SMOKE DAMPER
FS	FLOOR SINK
FSP	FAN STATIC PRESSURE
FT	FEET, FOOT
FT–WG, "WG	FEET WATER GAUGE
FV	FACE VELOCITY
FW	FEED WATER
G	(NATURAL) GAS
GA	GAUGE
GAL	GALLON
GALV	GALVANIZED
GC	GENERAL CONTRACTOR
GFE	GOVERNMENT FURNISHED EQUIPMENT
GN	GENERAL NOTE
GPM	GALLONS PER MINUTE
GSM	GALVANIZED SHEET METAL
GUI	GRAPHICAL USER INTERFACE
GV	GRAVITY VENTILATOR
GWR	GEOTHERMAL WATER RETURN
GWS	GEOTHERMAL WATER SUPPLY
H	HEIGHT
HG	REFRIGERANT HOT GAS
HORIZ	HORIZONTAL
HP	HORSEPOWER
HR	HOUR
HSPF	HEATING SEASONAL PERFORMANCE FACTOR
HVAC	HEATING, VENTILATING AND AIR CONDITIONING
HW	HOT WATER
HWR	HEATING WATER RETURN
HWS	HEATING WATER SUPPLY
HZ	HERTZ
ID	INSIDE DIAMETER
IFS	IN FURRED SPACE
IN	INCH, INCHES
IN WG, "WG	INCHES WATER GAUGE
INIT	INITIAL
ISO	ISOLATION
KEF	KITCHEN EXHAUST FAN
KW	KILOWATT
KWH	KILOWATT–HOUR
L	LENGTH
LAT	LEAVING AIR TEMPERATURE
LB	POUND
LDB	LEAVING DRY BULB TEMPERATURE
LDP	LEAVING DEW POINT TEMPERATURE
LF	LINEAR FEET
LLH	LONG LEG HORIZONTAL
LLV	LONG LEG VERTICAL
LRA	LOCKED ROTOR AMPERES
LVG	LEAVING
LWB	LEAVING WET BULB TEMPERATURE
LWT	LEAVING WATER TEMPERATURE
MAU	MAKE–UP AIR UNIT
MBH	THOUSANDS OF BTUH
MAX	MAXIMUM
MCA	MINIMUM CIRCUIT AMPACITY
MCC	MOTOR CONTROL CENTER
MD	MOTORIZED DAMPER
MECH	MECHANICAL
MER	MECHANICAL EQUIPMENT ROOM
MFR	MANUFACTURER
MHP	MOTOR HORSEPOWER
MIN	MINIMUM
MISC	MISCELLANEOUS
MOCP	MAXIMUM OVER CORRECT PROTECTION
MOV	MOTOR OPERATED VALVE, AUTOMATIC
MSL	MEAN SEA LEVEL
MSS	MANUFACTURERS' STANDARDIZATION SOCIETY
MTD	MOUNTED
MTG	MOUNTING
MU	MAKE–UP WATER
N/A	NOT APPLICABLE
NC	NOISE CRITERIA
(NC)	NORMALLY CLOSED
NEBB	NATIONAL ENVIRONMENTAL BALANCING BUREAU
NEMA	NATIONAL ELECTRICAL MANUFACTURERS ASSOCIATION
(NO)	NORMALLY OPEN
NIC	NOT IN CONTRACT
NPSHR	NET POSITIVE SUCTION HEAD REQUIRED
NTS	NOT TO SCALE
OBD	OPPOSED BLADE DAMPER
OD	OUTSIDE DIAMETER
ODC	OZONE DEPLETING COMPOUND
OPER	OPERATING
OSA,OA	OUTSIDE AIR
OV	OUTLET VELOCITY
PCF	POUNDS PER CUBIC FEET
PD	PRESSURE DROP
POC	POINT OF CONNECTION
POD	POINT OF DISCONNECTION
PPM	PARTS PER MILLION
PRESS	PRESSURE
PRV	PRESSURE REDUCING VALVE
PSI	POUNDS PER SQUARE INCH
PSIA	POUNDS PER SQUARE INCH ABSOLUTE
PSIG	POUNDS PER SQUARE INCH GAUGE
PTT	PRESSURE & TEMPERATURE TEST PORT
QTY	QUANTITY
RA	RELIEF AIR
REF	REFERENCE
REQD	REQUIRED
REV	REVISION, REVISE
RH	RELATIVE HUMIDITY
RLA	RUNNING LOAD AMPS
RM	ROOM
RPM	REVOLUTIONS PER MINUTE
RPZ	REDUCED PRESSURE ZONE BFP
RRV	REFRIGERANT RELIEF VENT
RS	REFRIGERANT SUCTION
RTU	ROOF TOP UNIT
SECT	SECTION
SEER	SEASONAL ENERGY EFFICIENCY RATIO
SENS	SENSIBLE
SF	SQUARE FEET
SG	SPECIFIC GRAVITY
SHT	SHEET
SMACNA	SHEET METAL AND AIR CONDITIONING CONTRACTORS' NATIONAL ASSOCIATION, INC.
SMS	SHEET METAL SCREW
SOV	SHUT OFF VALVE
SP	STATIC PRESSURE
SPECS	SPECIFICATIONS
SQ	SQUARE
SQ FT	SQUARE FEET
SS	STAINLESS STEEL
STD	STANDARD
STRUCT	STRUCTURAL
SW	SWITCH
T	THERMOSTAT
TEC	TERMINAL EQUIPMENT CONTROLLER
TEFC	TOTALLY ENCLOSED FAN COOLED
TCC	TOTAL COOLING CAPACITY
THC	TOTAL HEATING CAPACITY
TDH	TOTAL DYNAMIC HEAD
TEMP	TEMPERATURE
THC	TOTAL HEATING CAPACITY
THRU	THROUGH
TI	TENANT IMPROVEMENT
TOS	TOP OF STEEL
TSP	TOTAL STATIC PRESSURE
TYP	TYPICAL, UNLESS OTHERWISE NOTED
UFAD	UNDERFLOOR AIR DISTRIBUTION
UL	UNDERWRITER LABORATORIES
UON	UNLESS OTHERWISE NOTED
UTR	UP THROUGH ROOF
U/C	UNDERCUT
V	VOLT/VENT
VB	VACUUM BREAKER
VAV	VACUUM
VAC	VARIABLE AIR VOLUME
VD	MANUAL VOLUME DAMPER
VERT	VERTICAL
VFD	VARIABLE FREQUENCY DRIVE
VTR	VENT THROUGH ROOF
VAV	VARIABLE AIR VOLUME
W	WATT, WIDTH
W/	WITH
WB	WET BULB
WG	WATER GAUGE PRESSURE
WGT	WEIGHT
WP	WEATHER PROOF
WPD	WATER PRESSURE DROP (FT–WG)
WMS	WIRE MESH SCREEN, SEE GN#32.

GENERAL NOTES

1. THE DRAWINGS AND SPECIFICATIONS REPRESENT THE FINISHED PROJECT. UNLESS OTHERWISE NOTED, THEY DO NOT INDICATE THE METHOD OF CONSTRUCTION. CONTRACTOR SHALL SUPERVISE AND DIRECT THE WORK AND SHALL BE SOLELY RESPONSIBLE FOR ALL CONSTRUCTION MEANS, METHODS, TECHNIQUES, SEQUENCES AND PROCEDURES IN ACCORDANCE WITH GENERALLY ACCEPTED CONSTRUCTION PRACTICES. DESIGN, INSTALL, AND ASSURE ADEQUACY AND SAFETY OF TEMPORARY BRACING AND SUPPORTS.

2. PREPARATION: BEFORE PERFORMING MECHANICAL WORK, BECOME FULLY ACQUAINTED WITH JOB CONDITIONS AFFECTING INSTALLATION WORK COVERED BY THE DRAWINGS AND SPECIFICATIONS.

3. SAFETY: CONTRACTOR IS RESPONSIBLE FOR SAFETY OF WORK AREA DURING ENTIRE CONSTRUCTION PERIOD. PROTECT ADJACENT PROPERTIES AND UTILITIES IN ACCORDANCE WITH ALL NATIONAL, STATE AND LOCAL SAFETY ORDINANCES.

4. REFRIGERANTS: USE OF NON–OZONE DEPLETING COMPOUNDS IS MANDATORY.

5. SCHEDULE: SUBMIT WORK SEQUENCE SCHEDULE FOR APPROVAL BY COTR. DO NOT OPERATE ANY UTILITIES WITHOUT PRIOR PERMISSION FROM COTR. THIS INCLUDES, BUT IS NOT LIMITED TO, OPENING & CLOSING VALVES & SWITCHES, ETC. FOR DOMESTIC WATER, FIRE SPRINKLER SYSTEMS, ETC.

6. SUBMIT PRODUCT DATA TO COTR FOR APPROVAL OF ITEMS LISTED IN MECHANICAL EQUIPMENT LIST. OBTAIN ENGINEER'S APPROVAL PRIOR TO PURCHASE OR INSTALLATION.

7. COORDINATION: COORDINATE WORK AND INSTALLATION BETWEEN ALL TRADES AND WORKMEN. COORDINATE ELECTRICAL POWER SOURCES AND REQUIREMENTS FOR MECHANICAL EQUIPMENT AND MOTORIZED DEVICES, INCLUDING COMBINATION FIRE & SMOKE DAMPERS, AND CONTROL DAMPERS.

8. CODE COMPLIANCE: INSTALL MECHANICAL SYSTEMS PER CURRENT CALIFORNIA BUILDING CODES, INCLUDING CMC, CFC AND CPC. CONSTRUCT, INSULATE, SUPPORT, BRACE, AND SEAL PER CHAPTER 6 OF CMC.

9. EQUIPMENT INSTALLATION: INSTALL PER MANUFACTURER'S RECOMMENDATIONS AND WRITTEN INSTRUCTIONS, AND IN ACCORDANCE WITH LISTING REQUIREMENTS. SUPPORT AND ANCHOR ALL EQUIPMENT. PROVIDE MINIMUM SERVICE CLEARANCES. INSTALL PIPE REDUCERS AND DUCT TRANSITIONS WHERE REQUIRED FOR FINAL CONNECTION TO EQUIPMENT.

10. EQUIPMENT PADS: PROVIDE REINFORCED CONCRETE EQUIPMENT HOUSEKEEPING PAD PER SHEET S601 FOR ALL BASE MOUNTED EQUIPMENT, UON. FORM 1" CHAMFER ON ALL TOP EDGES. MINIMUM PAD HEIGHT IS 6" AFF, UON.

11. SUPPLEMENTAL STEEL: ATTACH ANCHORS, SUPPORTS AND BRACING FOR EQUIPMENT, DUCTS AND PIPES DIRECTLY TO CONCRETE OR STRUCTURAL STEEL ONLY. DO NOT ATTACH TO ROOF DECK. PROVIDE SUPPLEMENTAL STRUCTURAL STEEL WHERE UPPER ATTACHMENT CANNOT BE MADE DIRECTLY TO BUILDING STRUCTURAL FRAMING. SUPPLEMENTAL STRUCTURAL STEEL AND CONNECTIONS SHALL BE AS SPECIFIED FOR BUILDING FRAMING. SUBMIT DESIGN OF SUPPLEMENTAL STEEL AND APPLIED FORCES TO COTR FOR APPROVAL.

12. BASIS OF DESIGN: EQUIPMENT LOCATION, AND SERVICE ACCESS CLEARANCE INDICATED ON PLANS WERE SELECTED AS ENGINEERED BASIS OF DESIGN. ACTUAL SPACE REQUIREMENTS MAY VARY FROM DESIGN DEPENDING ON PURCHASED EQUIPMENT. IF APPROVED EQUIPMENT TO BE INSTALLED DIFFERS FROM THAT ILLUSTRATED ON PLANS, PROVIDE ALL ADJUSTMENTS REQUIRED FOR A FULLY FUNCTIONAL SYSTEM, AND COORDINATE ALL CONNECTING SERVICES WITHOUT ADDITIONAL COST TO GOVERNMENT.

13. DIMENSIONS: DO NOT SCALE DRAWINGS. ALL DIMENSIONS SHALL TAKE PRECEDENCE OVER SCALE. SITE CONDITIONS SHALL PREVAIL. DIMENSIONS INDICATED ARE FOR PRICING PURPOSES ONLY. FIELD VERIFY ALL DIMENSIONS TO ENSURE PRECISE FIT.

14. MOTORS: PREMIUM EFFICIENCY.

15. PIPING INSTALLATION: ALL VALVES AND PIPING SYSTEM SPECIALTIES SHALL BE FULL–LINE SIZE, UON. PROVIDE CHAIN OPERATOR FOR VALVES INSTALLED OVER 6'–0" AFF. ALL HORIZONTAL REDUCTIONS IN PIPE SIZE SHALL MADE ECCENTRIC REDUCERS WITH TOP SIDE FLAT. INSTALL VENTS AT ALL HIGH POINTS, AND DRAINS AT ALL LOW POINTS OF PIPING. DO NOT INSTALL WATER PIPING ABOVE ELECTRICAL EQUIPMENT. INSTALL HORIZONTAL PIPES WITH MINIMUM 7'–0" HEADROOM CLEARANCE IN MECHANICAL ROOMS, UNLESS OTHERWISE NOTED. SUPPORT ALL SUSPENDED PIPES INSIDE MECHANICAL ROOM WITH SPRING HANGER ISOLATORS. SEAL ALL PIPE PENETRATIONS THROUGH RAISED FLOOR PLENUM AIR TIGHT. INSTALL ESCUTCHEON ON PIPE PENETRATION THROUGH FINISHED WALLS AND FLOORS.

16. PIPE INSULATION: INSTALL INSULATION INSERT AND INSULATION SHIELD AT ALL INSULATED PIPE SUPPORTS. INSULATE PIPING WITH THICKNESS AS LISTED BELOW:
    CHS & CHR: 1" HWS & HWR: 1"

17. REFRIGERANT FIELD PIPING:
    TUBING: COPPER TYPE K, ASTM B 280, HARD DRAWN, ACR GRADE FACTORY CLEANED
    REFRIGERANT PIPING, SLOPE ALL TUBING ½" PER 10 FEET IN DIRECTION OF FLOW.
    JOINTS: BRAZED, TYPE BCuP–5 FILLER METAL, NITROGEN PURGE
    SUPPORTS: CONFORM TO MSS SP–58 AND MSS SP–69. PROVIDE VIBRATION ABSORBING
    NEOPRENE CUSHION AT SUPPORTS.
    FITTINGS: WROUGHT COPPER OR BRONZE FOR BRAZED JOINTS, ASME B16.22.
    INSULATION SYSTEM: ASCS TYPE T–3, CELLULAR ELASTOMERIC, ASTM C 534, GRADE 1, TYPE 1,
    ¾" THICK. DO NOT INSULATE RL TUBING.
    VALVES: TESTED FOR REFRIGERANT SERVICE, BRAZED CONNECTIONS, FULL–PORT BALL VALVE
    FOR REFRIGERANT STOPS.

18. FIRESTOP ALL PIPE PENETRATIONS THROUGH FIRE RATED WALLS OR FLOORS USING UL LISTED FIRESTOP ASSEMBLY.

19. SEISMIC BRACING: SUPPORT AND BRACE ALL PIPING AND DUCTWORK PER SMACNA "SEISMIC RESTRAINT MANUAL GUIDELINES FOR MECHANICAL SYSTEMS", LATEST EDITION. DESIGN TO SEISMIC HAZARD LEVEL A.

20. DUCTWORK: CONSTRUCT ALL DUCTWORK TO SMACNA PRESSURE CLASS 1" WG, AND SMACNA SEAL CLASS "B", UON. INSTALL DOUBLE THICKNESS TURNING VANES IN ALL 90° MITERED DUCT ELBOWS, UON. MAXIMUM ALLOWABLE FLEXIBLE DUCT LENGTH IS 5'–0". INSTALL HIGH EFFICIENCY TAKE–OFF'S DOWNSTREAM OF FAN. DUCT SIZES ARE IN INCHES, AND INDICATE INDICATE CLEAR INSIDE DIMENSION OF AIR PATH. RECTANGULAR DUCT FIRST DIMENSION IS SIDE VIEWED, SECOND DIMENSION IS PERPENDICULAR TO VIEW. SEAL ALL DUCT CONNECTION, AND PENETRATIONS THEROUGH RAISED FLOOR PLENUM AIR TIGHT.

21. DUCTWORK AND PIPE ROUTING SHOWN ON DRAWINGS IS DIAGRAMMATIC, AND IS NOT TO BE SCALED. PROVIDE ALTERNATE ROUTING, OFFSETS AND TRANSITIONS WHERE REQUIRED FOR COMPLETION OF WORK, AT NO ADDITIONAL COST TO GOVERNMENT.

22. DUCT INSULATION: INSULATE ALL SUPPLY DUCTS. INSULATE RELIEF DUCTS ABOVE ROOF. PROVIDE ACOUSTIC DUCT LINER IN RECTANGULAR SUPPLY AND RELIEF DUCTS WITHIN 15 FEET OF A FAN, INSIDE THE MER, AND WHERE INDICATED OTHERWISE. INSULATION AND DUCT LINER THICKNESS SHALL BE 1" MINIMUM, UON.

23. COMBINATION FIRE AND SMOKE DAMPERS: INSTALL DAMPERS PER ASSEMBLY LISTING. INSTALL DUCT MOUNTED SMOKE DETECTORS WITH IN 5 FEET OF DAMPER ASSEMBLY, UNLESS AREA SMOKE DETECTION IS PROVIDED THROUGHOUT THE BUILDING.

24. ACCESS: INSTALL SERVICE ACCESS PANEL OR DOOR FOR EQUIPMENT INSTALLED IN INACCESSIBLE WALLS OR CEILINGS, INCLUDING, BUT NOT LIMITED TO, DAMPERS, VALVES, FLOW METERS, TRAP PRIMERS. COORDINATE LOCATION WITH GENERAL CONTRACTOR.

25. CONTROLS: CONTROL DIAGRAMS ARE SCHEMATIC REPRESENTATIONS ONLY. PROVIDE ALL ADDITIONAL CONTROL ITEMS NECESSARY TO MEET THE FUNCTIONAL REQUIREMENTS OF THE SEQUENCE OF OPERATIONS, AND SPECIFICATIONS. PROVIDE COMPLETE SYSTEM WHICH IS FUNCTIONAL IN ALL RESPECTS. TEST FOR CONFORMANCE TO THE PERFORMANCE REQUIREMENTS. COMMISSION INTO OPERATION, AND CALIBRATE UNDER OPERATING CONDITIONS. MOUNT ROOM TEMPERATURE SENSORS AT 44 INCHES ABOVE FINISHED FLOOR, UON.

26. BALANCING DAMPERS: INSTALL DAMPER IN EACH BRANCH DUCT CONNECTED TO AN AIR OUTLET OR INLET, WHETHER SHOWN ON PLAN OR NOT. INSTALL BALANCING DAMPER AT MAXIMUM DISTANCE FROM AIR OUTLET OR INLET. PROVIDE CONCEALED REGULATOR FOR MANUAL VOLUME DAMPERS INSTALLED IN GYPSUM BOARD CEILINGS.

27. TEST AND BALANCE: BALANCE AIR SUPPLY, RETURN AND EXHAUST SYSTEMS TO AIR FLOW QUANTITIES SHOWN ON PLAN. BALANCE AIR OUTLETS AND INLETS TO +5% TO –5% TOLERANCE. BALANCE AIR DELIVERY EQUIPMENT TO +5% TO –0% TOLERANCE. BALANCE HYDRONIC CIRCUITS TO WATER FLOW QUANTITIES SHOWN ON PLAN. SUBMIT CERTIFIED AIR AND WATER BALANCE REPORT AND OUTSIDE AIR CERTIFICATION TO COTR & ENGINEER FOR REVIEW PRIOR TO PROJECT CLOSEOUT AND OCCUPANCY. TEST AND BALANCE AGENCY SHALL BE CERTIFIED BY AABC OR NEBB, OR EQUAL.

28. RECORD DRAWINGS: SUBMIT AS–BUILT DRAWINGS OF ALL MECHANICAL AND PLUMBING SYSTEMS PRIOR TO JOB COMPLETION AND PROJECT CLOSEOUT

29. NOT ALL SYMBOLS AND ABBREVIATIONS LISTED ON SHEET M001 AND M002 ARE USED.

30. LOCATION AND QUANTITY OF SUPPLY AIR OUTLETS IN RAISED FLOOR IS APPROXIMATE. FINAL LOCATION IS DEPENDENT ON FUTURE TENANT FURNITURE LAYOUT.

31. CO2 SENSORS: CERTIFIED BY MANUFACTURER FOR ACCURACY:±75 PPM AT 600 PPM AND 1000 PPM AT MSL AND 77°F, AND NOT TO REQUIRE RECALIBRATION MORE THAN ONCE EVERY 5 YEARS. FACTORY CALIBRATED OR CALIBRATED AT START UP. IN ADDITION TO ZONE SENSORS SHOWN ON M501, INSTALL ONE SENSOR IN EACH CONFERENCE ROOM, OR ASSEMBLY SPACE. MOUNT CO2 SENSORS BETWEEN 3' AND 6' ABOVE FINISHED FLOOR. REFER TO ARCHITECTURAL DRAWINGS FOR EXACT HEIGHT.

32. WIRE MESH SCREEN: ½" MESH GALVANIZED STEEL WIRE (0.08" DIAMETER).

33. APPROVED MANUFACTURERS: MANUFACTURERS NAMED ON DRAWINGS REFER TO ALL MANUFACTURERS FOR SIMILAR PRODUCTS AS LISTED BELOW. PRODUCT MUST BE EQUIVALENT IN MATERIAL, DIMENSIONS, FUNCTION AND APPLICATION AS THE NAMED PRODUCT:

    METAL FRAMING CHANNEL, PIPE GUIDES, PIPE CLAMPS: COOPER B–LINE, UNISTRUT, POWERSTRUT, OR EQUAL. "B–LINE" REFERS TO COOPER B–LINE.

PROJECT STATUS

BID SET 04/30/09

ISSUE

MARK	DATE	DESCRIPTION	INITIAL

DRAWN	J HO	DATE
DESIGNED	M CALLAHAN	DATE
CHECKED	S PAINTER	DATE
PROJMGR	J GRANT	DATE
REQUESTOR	R SCHULER	DATE
R&QA		DATE
SAFETY		DATE
SUPERVISOR	S FRANKEL	DATE

Ames Research Center
Moffet Field, California

N232 COLLABORATIVE SUPPORT FACILITY
MECHANICAL
ABBREVIATIONS AND
GENERAL NOTES

SIZE	CAGE CODE		REV
D	25307	A232-0800- M002	

SCALE | INDEX | SHEET OF

DWG: R:\232\N232 Collaborative Support Facility\500_CAD\CAD\Drawings\M002.dwg User: jjho
DATE: Apr 30, 2009 – 1:18:50 pm Images:
Xrefs: RBDR–SHORT

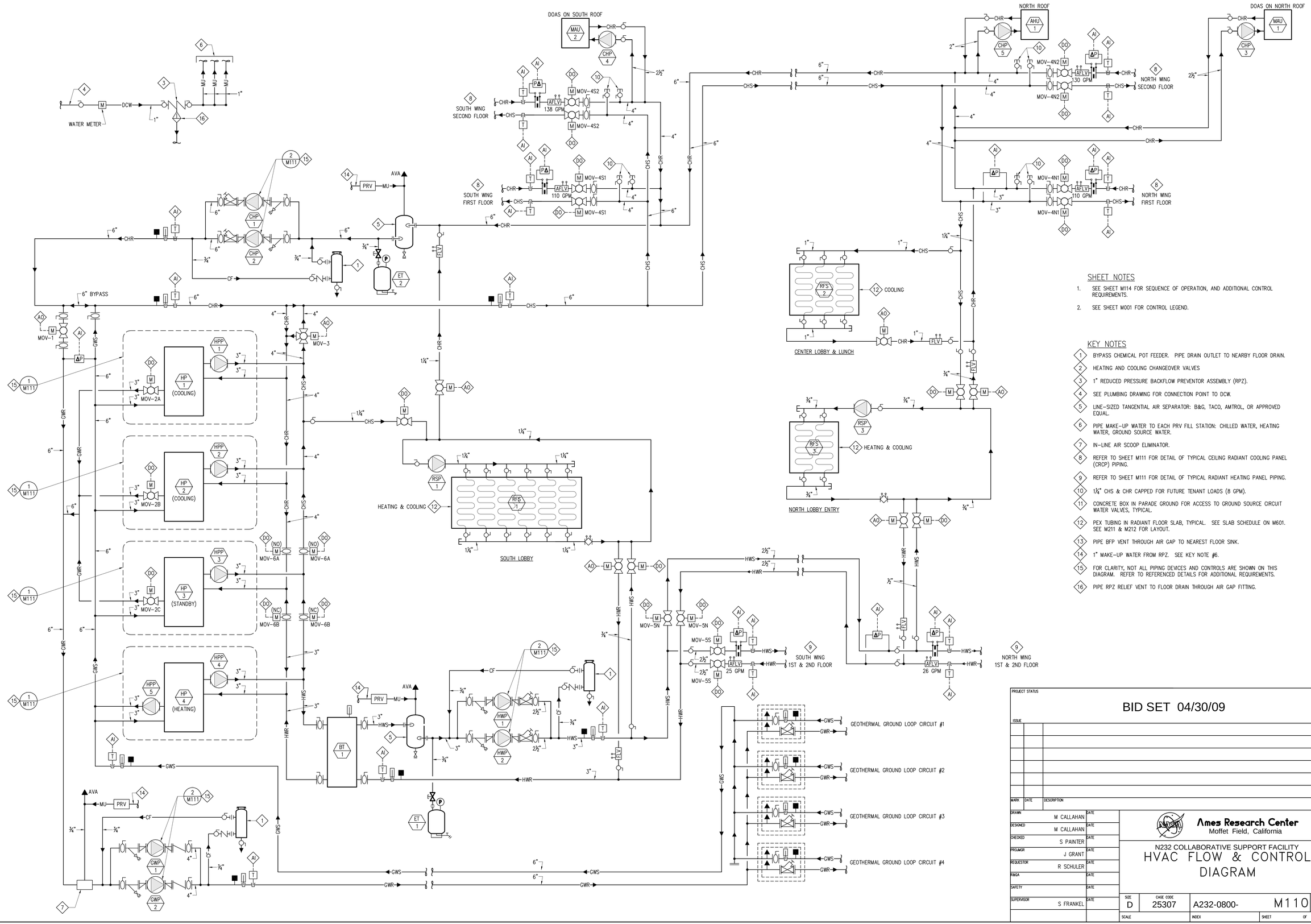

SHEET NOTES

1. SEE SHEET M114 FOR SEQUENCE OF OPERATION, AND ADDITIONAL CONTROL REQUIREMENTS.
2. SEE SHEET M001 FOR CONTROL LEGEND.

KEY NOTES

1. BYPASS CHEMICAL POT FEEDER. PIPE DRAIN OUTLET TO NEARBY FLOOR DRAIN.
2. HEATING AND COOLING CHANGEOVER VALVES
3. 1" REDUCED PRESSURE BACKFLOW PREVENTOR ASSEMBLY (RPZ).
4. SEE PLUMBING DRAWING FOR CONNECTION POINT TO DCW.
5. LINE-SIZED TANGENTIAL AIR SEPARATOR: B&G, TACO, AMTROL, OR APPROVED EQUAL.
6. PIPE MAKE-UP WATER TO EACH PRV FILL STATION: CHILLED WATER, HEATING WATER, GROUND SOURCE WATER.
7. IN-LINE AIR SCOOP ELIMINATOR.
8. REFER TO SHEET M111 FOR DETAIL OF TYPICAL CEILING RADIANT COOLING PANEL (CRCP) PIPING.
9. REFER TO SHEET M111 FOR DETAIL OF TYPICAL RADIANT HEATING PANEL PIPING.
10. 1¼" CHS & CHR CAPPED FOR FUTURE TENANT LOADS (8 GPM).
11. CONCRETE BOX IN PARADE GROUND FOR ACCESS TO GROUND SOURCE CIRCUIT WATER VALVES, TYPICAL.
12. PEX TUBING IN RADIANT FLOOR SLAB, TYPICAL. SEE SLAB SCHEDULE ON M601. SEE M211 & M212 FOR LAYOUT.
13. PIPE BFP VENT THROUGH AIR GAP TO NEAREST FLOOR SINK.
14. 1" MAKE-UP WATER FROM RPZ. SEE KEY NOTE #6.
15. FOR CLARITY, NOT ALL PIPING DEVICES AND CONTROLS ARE SHOWN ON THIS DIAGRAM. REFER TO REFERENCED DETAILS FOR ADDITIONAL REQUIREMENTS.
16. PIPE RPZ RELIEF VENT TO FLOOR DRAIN THROUGH AIR GAP FITTING.

PROJECT STATUS

BID SET 04/30/09

ISSUE			
MARK	DATE	DESCRIPTION	INITIAL

DRAWN	M CALLAHAN	DATE
DESIGNED	M CALLAHAN	DATE
CHECKED	S PAINTER	DATE
PROJMGR	J GRANT	DATE
REQUESTOR	R SCHULER	DATE
R&QA		DATE
SAFETY		DATE
SUPERVISOR	S FRANKEL	DATE

Ames Research Center
Moffet Field, California

N232 COLLABORATIVE SUPPORT FACILITY

HVAC FLOW & CONTROL DIAGRAM

SIZE	CAGE CODE		REV
D	25307	A232-0800- M110	
SCALE		INDEX	SHEET OF

DWG: R:\232\N232 Collaborative Support Facility\500_CAD\CAD\Drawings\M110.dwg User: jjiho
DATE: April 30, 2009 - 11:18:38 pm Images:
Xrefs: XBDR-SHORT

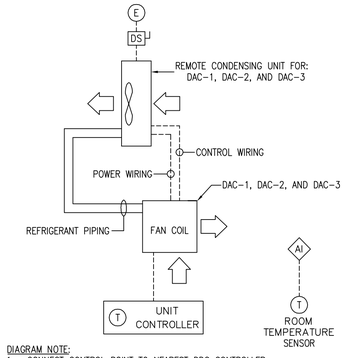

DIAGRAM NOTE:
1. CONNECT CONTROL POINT TO NEAREST DDC CONTROLLER.

5 ELEVATOR MACHINE ROOM, COMM ROOM & TEL/DATA ROOM COOLING

M111 REF. NONE SCALE: NONE

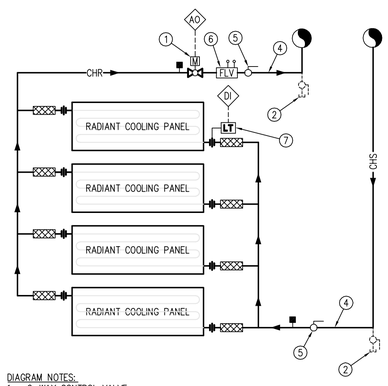

DIAGRAM NOTES:
1. 2-WAY CONTROL VALVE.
2. CAPPED DRAIN VALVE WITH HOSE ADAPTOR REQUIRED AT ALL LOW POINTS FOR DRAINAGE
3. AIR VENT REQUIRED WHEN TAPPED INTO TOP OF MAINS.
4. 1/2" BRANCH PIPE TO PANEL.
5. LINE SIZE SHUT-OFF SERVICE VALVE
6. AUTOMATIC FLOW LIMITING VALVE WITH PRESSURE PORTS FOR COMMISSIONING.
7. LEAK DETECTION TAPE: SEE M501 FOR LOCATION.

DISCRETE PIPING COMPONENTS MAY BE COMBINED IN AVAILABLE KITS.

4 CEILING RADIANT COOLING PANELS (CRCP)

M111 REF. NONE SCALE: NONE

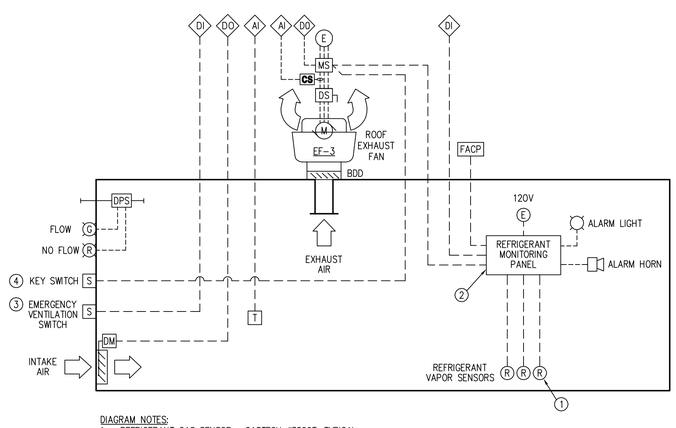

DIAGRAM NOTES:
1. REFRIGERANT GAS SENSOR: GASTECH #3890T, TYPICAL.
2. REFRIGERANT GAS MONITOR PANEL OUTSIDE MECHANICAL EQUIPMENT ROOM: GASTECH #1620, TYPICAL. CALIBRATE AND ADJUST MONITORS.
3. EMERGENCY SWITCH: "ON" ONLY BREAK-GLASS TYPE SWITCH, CLEARLY IDENTIFIED.
4. KEY SWITCH: KEY OPERATED THREE POSITION H-O-A SWITCH, WITH COLORED LAMPS TO INDICATE AIR FLOW.

6 REFRIGERANT PURGE

M111 REF. NONE SCALE: NONE

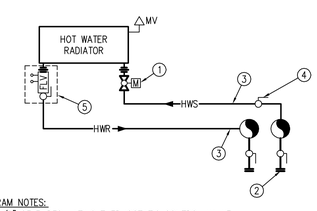

DIAGRAM NOTES:
1. 1/2" SELF-REGULATING THERMOSTATIC CONTROL VALVE:
2. DRAIN VALVE WITH CAPPED HOSE ADAPTOR REQUIRED AT ALL LOW POINTS FOR DRAINAGE
3. 1/2" BRANCH PIPE TO RADIANT HEATER.
4. SHUT-OFF SERVICE VALVE
5. COMBINATION AUTOMATIC FLOW LIMITING VALVE WITH PRESSURE PORTS FOR COMMISSIONING, SHUTOFF VALVE, AND UNION CONNECTION.

3 RADIANT HEATING PANEL

M111 REF. NONE SCALE: NONE

SHEET NOTES

1. SEE SHEET M114 FOR SEQUENCE OF OPERATION, AND ADDITIONAL CONTROL REQUIREMENTS.
2. SEE SHEET M001 FOR CONTROL LEGEND.

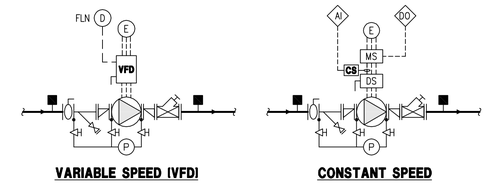

VARIABLE SPEED (VFD) **CONSTANT SPEED**

2 HYDRONIC PUMPS

M111 REF. NONE SCALE: NONE

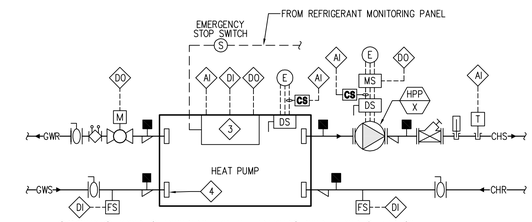

COOLING AND STANDBY HEAT PUMPS (HP-1, HP-2, HP-3)

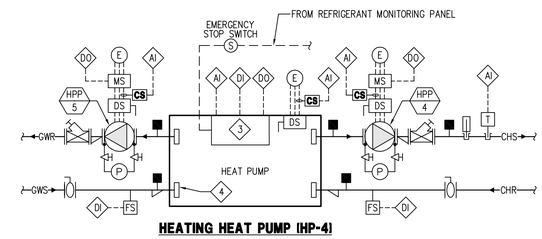

HEATING HEAT PUMP (HP-4)

DIAGRAM NOTES:
1. CONNECT ALL DDC CONTROL POINTS TO LOCAL DDC CONTROLLER: SIEMENS. PROVIDE ADDITIONAL CONTROLLERS AS REQUIRED FOR NUMBER OF POINTS.
2. CONNECT 24 VOLT POWER FROM STEP-DOWN TRANSFORMER IN LOCAL CONTROL PANEL
3. HEAT PUMP FACTORY CONTROLS FOR INTERNAL FUNCTIONS, INCLUDING COMPRESSORS, REFRIGERANT CIRCUITS, AND ALL SAFETIES. SEE MFR SUBMITTAL FOR CONTROL WIRING.
4. CONNECT PIPING TO HEAT PUMP WITH FLEXIBLE GROOVED COUPLINGS, TYPICAL: VICTAULIC, GRUVLOK, OR APPROVED EQUAL.

1 HEAT PUMP

M111 REF. NONE SCALE: NONE

PROJECT STATUS

BID SET 04/30/09

ISSUE

MARK	DATE	DESCRIPTION	INITIAL

		DATE
DRAWN	J HO	
DESIGNED	M CALLAHAN	
CHECKED	S PAINTER	
PROJMGR	J GRANT	
REQUESTOR	R SCHULER	
R&QA		
SAFETY		
SUPERVISOR	S FRANKEL	

Ames Research Center
Moffet Field, California

N232 COLLABORATIVE SUPPORT FACILITY
HVAC FLOW & CONTROL DIAGRAMS

SIZE	CAGE CODE		REV
D	25307	A232-0800- M111	
SCALE		INDEX	SHEET OF

DWG: R:\232\N232 Collaborative Support Facility\500_CAD\CAD\Drawings\M111.dwg User: jjho
DATE: Apr 30, 2009 - 1:16:05 pm Images:
Xrefs: ROBR-SHORT

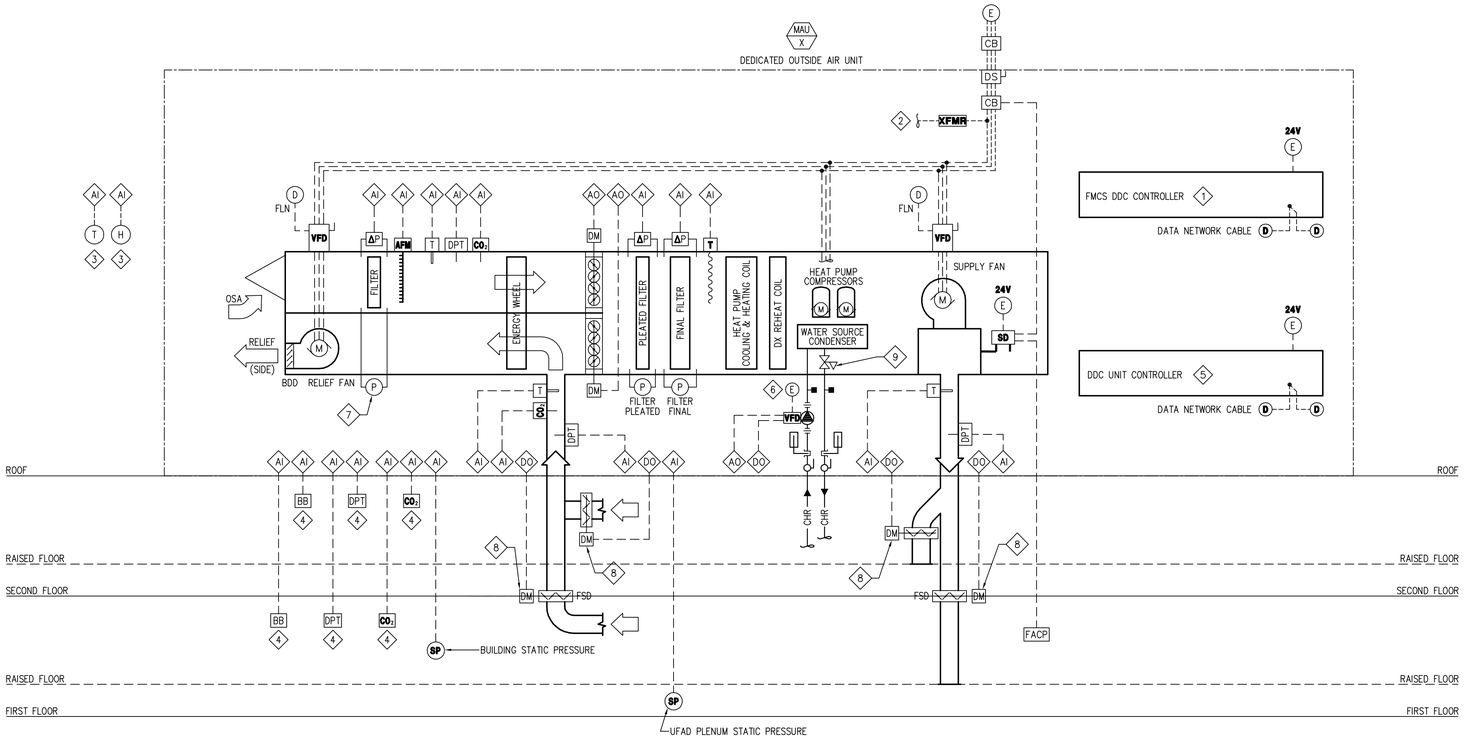

SHEET NOTES

1. SEE SHEET M114 FOR SEQUENCE OF OPERATION, AND ADDITIONAL CONTROL REQUIREMENTS.
2. SEE SHEET M001 FOR CONTROL LEGEND.

DIAGRAM NOTES:

1. CONNECT ALL DDC CONTROL POINTS AND DATA NETWORK CABLES TO DDC CONTROLLERS: SIEMENS PXC24 FOR ROOFTOP APPLICATION WITH COMMUNICATION COMPATIBLE WITH FMCS AND UNIT CONTROL SYSTEM. FACTORY MOUNT FMCS CONTROLLER INSIDE UNIT CONTROL PANEL. PROVIDE ADDITIONAL CONTROLLERS AS REQUIRED FOR NUMBER OF POINTS.
2. CONNECT 24 VOLT POWER FROM STEP-DOWN TRANSFORMER TO UNIT CONTROL PANEL, CONTROLLERS, AND UNIT SMOKE DETECTOR.
3. HOODED OSA TEMPERATURE AND HUMIDITY SENSOR. LOCATE ON PROTECTED AREA OF BUILDING.
4. REFER TO SHEET M501 FOR NUMBER AND LOCATION OF SENSORS ON EACH FLOOR.
5. FACTORY DDC UNIT CONTROLLER BY MANUFACTURER: PROVIDE ALL NECESSARY INTERNAL ROOFTOP UNIT AND HEAT PUMP CONTROL FUNCTIONS REQUIRED BY MANUFACTURER THAT IS NOT PROVIDED BY FMCS CONTROLLERS.
6. PUMP INSIDE CONDENSER CABINET. PLUG PUMP INTO INTERNAL CONVENIENCE OUTLET.
7. INSTALL MAGNEHELIC GAGE FOR DIFFERENTIAL PRESSURE INDICATION ACROSS EACH FILTER BANK, TYPICAL.
8. MOTOR OPERATED ZONE DAMPER – SEE M501 FOR ZONING (N1, N2, SI, S2)
9. UNIT HEAT EXCHANGER FLOW REGULATOR.

2 DEDICATED OUTSIDE AIR SYSTEMS (DOAS)

M112 REF. NONE SCALE: NONE

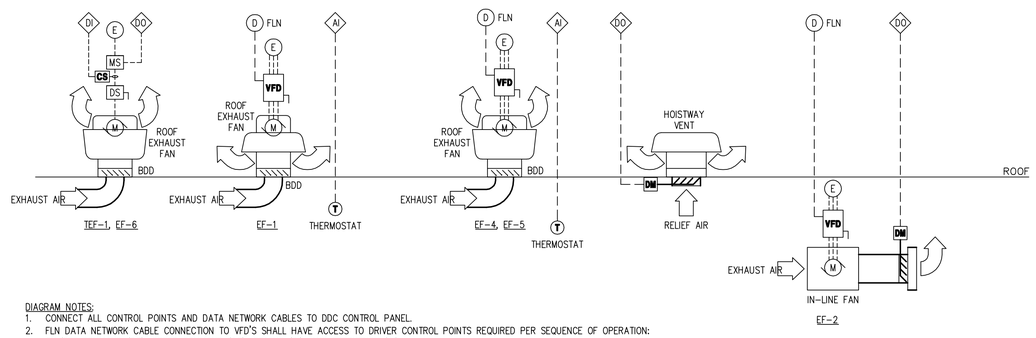

DIAGRAM NOTES:

1. CONNECT ALL CONTROL POINTS AND DATA NETWORK CABLES TO DDC CONTROL PANEL.
2. FLN DATA NETWORK CABLE CONNECTION TO VFD'S SHALL HAVE ACCESS TO DRIVER CONTROL POINTS REQUIRED PER SEQUENCE OF OPERATION: ON/OFF COMMAND (DO), SPEED COMMAND (AO), STATUS (DI), AND FREQUENCY (AI).

1 MISCELLANEOUS FANS

M112 REF. NONE SCALE: NONE

PROJECT STATUS

BID SET 04/30/09

ISSUE			
MARK	DATE	DESCRIPTION	INITIAL

DRAWN	M CALLAHAN	DATE
DESIGNED	M CALLAHAN	DATE
CHECKED	S PAINTER	DATE
PROJMGR	J GRANT	DATE
REQUESTOR	R SCHULER	DATE
R&QA		DATE
SAFETY		DATE
SUPERVISOR	S FRANKEL	DATE

Ames Research Center
Moffet Field, California

N232 COLLABORATIVE SUPPORT FACILITY
HVAC FLOW & CONTROL DIAGRAMS

SIZE	CAGE CODE		REV
D	25307	A232-0800- M112	
SCALE		INDEX	SHEET OF

DWG: R:\232\N232 Collaborative Support Facility\500_CAD\CAD\Drawings\M112.dwg User: jjho
DATE: Apr 30, 2009 – 1:17:53 pm Images:
Xrefs: ROBR-SHORT

FMCS INPUT/OUTPUT TABLE

INPUTS (MONITOR AND DISPLAY) — ANALOG

SYSTEM, APPARATUS, OR AREA POINT DESCRIPTION	HEAT PUMP CURRENT DRAW	LOAD WATER SUPPLY TEMP.	LOAD WATER RETURN TEMP.	GROUND SOURCE EWT	GROUND SOURCE LWT			SUPPLY AIR DRY BULB TEMP.	SUPPLY AIR DEW POINT	RELIEF AIR DRY BULB TEMP.	RELIEF AIR DEW POINT		FLOOR PLENUM STATIC PRESSURE	BUILDING STATIC PRESSURE	OSA DRY-BULB TEMP.	OSA WET-BULB TEMP.	OSA CO2 CONCENTRATION	OSA DEW POINT		ROOM AIR DRY BULB TEMP.	ROOM OPERATIVE TEMP.	ROOM HUMIDITY	CRITICAL ROOM CO2 PPM	REFRIGERANT PPM	PUMP DIFFERENTIAL PRESSURE	AIR FILTER PRESSURE DROP	ZONE CHS TEMP.	ZONE CHR TEMP.	ZONE CHILLED WATER FLOW	ZONE HWS TEMP.	ZONE HWR TEMP.	ZONE HEATING WATER FLOW	ZONE DEW POINT TEMPERATURE	ZONE CO2 PPM		
HP-1,2,3,4	●	●	●	●	●																															
MAU-1,2								●	●	●	●		●	●	●	●	●									●								●		
AHU-1								●	●	●	●															●								●		
TEF-1, EF-6																																				
EF-1 (LOBBY)																				●			●													
EF-2,4 (ELEC)																				●																
EF-3 (MER)																				●				●												
EF-5 (ELEC)																				●																
CHP-1,2																									●											
GWP-1,2																									●											
HPP-1,2,3,4,5																																				
HWP-1,2																									●											
RSP-1,3																																				
CHP-3,4,5																																				
CRCP																					●															
RADIANT HEAT PANELS																					●															
RADIANT SLAB																					●															
DAC-1,2,3																				●																
ENERGY DISPLAY																											●	●	●	●	●	●				

INPUTS (MONITOR AND DISPLAY) — DIGITAL

SYSTEM, APPARATUS, OR AREA POINT DESCRIPTION	FAN STATUS	PUMP STATUS	DUCT (UNIT) SMOKE DETECTOR	COOLING ISO VALVE POSITION	HEATING ISO VALVE POSITION	HEAT PUMP ISO VALVE POSITION	HEAT PUMP FLOW SWITCH	MOISTURE DETECTION
HP-1,2,3,4						●	●	●
MAU-1,2	●		●					
AHU-1	●		●					
TEF-1, EF-6	●							
EF-1 (LOBBY)	●							
EF-2,4 (ELEC)	●							
EF-3 (MER)	●							
EF-5 (ELEC)	●							
CHP-1,2		●		●				
GWP-1,2		●						
HPP-1,2,3,4,5		●						
HWP-1,2		●			●			
RSP-1,3		●						
CHP-3,4,5								
CRCP								
RADIANT HEAT PANELS								
RADIANT SLAB								
DAC-1,2,3								
ENERGY DISPLAY								

OUTPUTS AND PROGRAMS — COMMANDABLE

SYSTEM, APPARATUS, OR AREA POINT DESCRIPTION	EQUIPMENT UNIT START/STOP	FAN START/STOP	LOAD WATER TEMP. SET PT.	GROUND SOURCE ISO VALVE	CHS TEMP SET POINT	HWS TEMP SET POINT	PUMP SPEED		SUPPLY FAN SPEED	EXHAUST FAN SPEED	COOLING WATER ISO VALVE	HEATING WATER ISO VALVE	BLDG STATIC PRESSURE SET PT.	HEAT PUMP STANDBY VALVES	DOAS FLOOR ISO DAMPERS	CHANGEOVER VALVES	REVERSING VALVES	
HP-1,2,3,4	●		●	●	●	●								●			●	
MAU-1,2	●	●							●	●			●		●			
AHU-1		●							●	●			●					
TEF-1, EF-6		●																
EF-1 (LOBBY)		●								●								
EF-2,4 (ELEC)		●								●								
EF-3 (MER)		●								●								
EF-5 (ELEC)		●								●								
CHP-1,2	●						●				●							
GWP-1,2	●						●											
HPP-1,2,3,4,5	●																	
HWP-1,2	●						●					●						
RSP-1,3	●						●									●		
CHP-3,4,5																		
CRCP											●							
RADIANT HEAT PANELS																		
RADIANT SLAB																		
DAC-1,2,3																		
ENERGY DISPLAY																		

OUTPUTS AND PROGRAMS — ALARM

SYSTEM, APPARATUS, OR AREA POINT DESCRIPTION	HEAT PUMP SUMMARY ALARM	HEAT PUMP ALERT		FAN FAILURE	SUPPLY AIR LOW LIMIT	ROOM DEW POINT HIGH LIMIT	FILTER DELTA-P HIGH LIMIT	RELIEF AIR CO2 HIGH LIMIT	ROOM TEMPERATURE HIGH LIMIT		PUMP FAILURE
HP-1,2,3,4	●	●									
MAU-1,2				●	●	●	●	●			
AHU-1				●	●		●	●			
TEF-1, EF-6				●							
EF-1 (LOBBY)				●					●		
EF-2,4 (ELEC)				●					●		
EF-3 (MER)				●							
EF-5 (ELEC)				●							
CHP-1,2											●
GWP-1,2											●
HPP-1,2,3,4,5											●
HWP-1,2											●
RSP-1,3											●
CHP-3,4,5											
CRCP											
RADIANT HEAT PANELS											
RADIANT SLAB											
DAC-1,2,3									●		
ENERGY DISPLAY											

OUTPUTS AND PROGRAMS — PROGRAM

SYSTEM, APPARATUS, OR AREA POINT DESCRIPTION	OCCUPANCY SCHEDULE	HEAT PUMP SEQUENCING	CHS TEMPERATURE SET POINT	HWS TEMPERATURE SET POINT	SUPPLY AIR DEW POINT SET PT.	SUPPLY AIR DRY BULB SET PT.	CO2 DIFFERENTIAL SET PT.	OPTIMUM WARM-UP START TIME		ROOM TEMP SET PONT	PRE-OCCUPANCY PURGE	PUMP PRESSURE DIFF SET POINT	HVAC ENERGY USAGE DISPLAY	.	.	.	RELIEF AIR CO2 TRENDING	DEW POINT TRENDING	HEAT PUMP CURRENT TRENDING	ALARM INSTRUCTION
HP-1,2,3,4		●	●	●															●	●
MAU-1,2	●				●	●	●	●	●		●						●	●		●
AHU-1	●					●	●	●	●		●						●			●
TEF-1, EF-6																				●
EF-1 (LOBBY)																				●
EF-2,4 (ELEC)																				●
EF-3 (MER)																				●
EF-5 (ELEC)																				●
CHP-1,2												●								●
GWP-1,2												●								●
HPP-1,2,3,4,5																				●
HWP-1,2												●								●
RSP-1,3												●								●
CHP-3,4,5																				
CRCP																				●
RADIANT HEAT PANELS																				●
RADIANT SLAB																				
DAC-1,2,3										●										●
ENERGY DISPLAY													●							

NOTES:
1. TABLE IS TO SHOW FUNCTIONAL INTENT, AND IS NOT INTENDED TO BE A COMPLETE AND EXACT LIST OF ALL POINTS REQUIRED. DESIGN AND INSTALL CONTROL SYSTEM TO PERFORM AND FUNCTION AS REQUIRED BY SEQUENCE OF OPERATION.
2. AMBIENT AIR SENSORS ON MAU-1 ONLY.
3. TERMINATE ALL I/O POINTS IN FMCS PANEL.
4. SHIELDED DATA LINK CABLE: TSP CABLE PER SEIMENS SPECIFICATIONS WITH LOW CAPACITANCE TO PREVENT DATA TRANSMISSION LOSS. COMPLY WITH TSP CABLE LENGTH RESTRICTIONS.

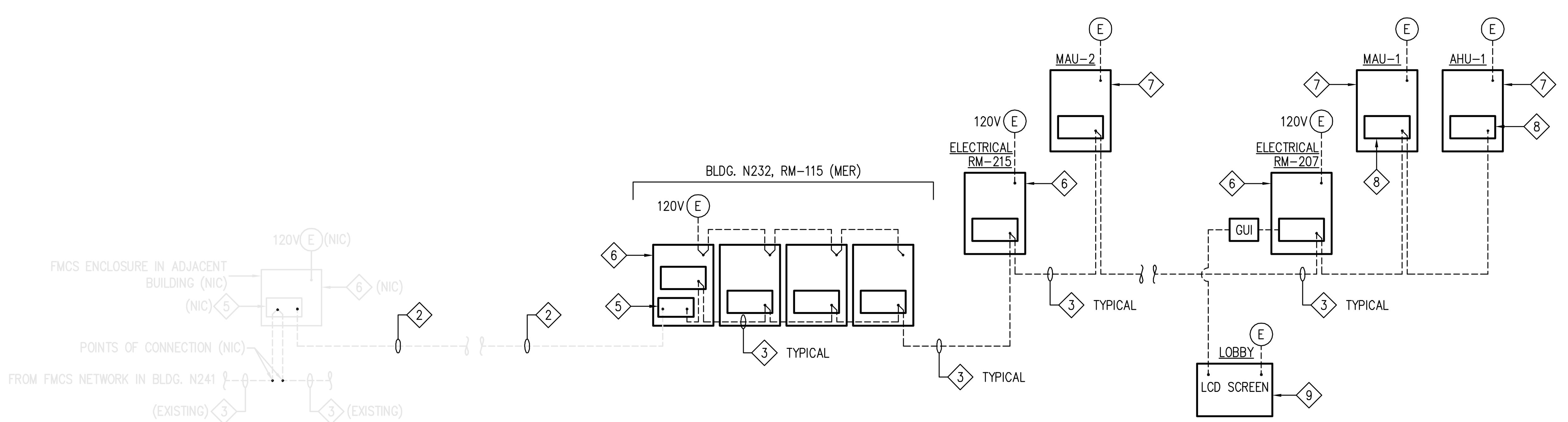

SHEET NOTES
1. SEE SHEET M114 FOR SEQUENCE OF OPERATION, AND ADDITIONAL CONTROL REQUIREMENTS.
2. SEE SHEET M001 FOR CONTROL LEGEND.

DIAGRAM NOTES:
1. GENERAL: ILLUSTRATED FMCS (DDC) ARCHITECTURE IS CONCEPTUAL, AND QUANTITIES ARE APPROXIMATE. PROVIDE COMPLETE DESIGN OF CONTROL SYSTEM PER CONTROL NOTE #1/M114.
2. FIBER OPTIC CABLE FROM BUILDING N241 PER CODE JT SPECIFICATIONS, FOR CONNECTIVITY WITH FMCS CENTRAL CONTROL IN BUILDING M510. CABLE NOT IN CONTRACT. SEE ELECTRICAL FOR CONDUIT.
3. DATA NETWORK CABLE IN CONDUIT: RS-485 BLN (BUILDING LEVEL NETWORK) TRUNK, 24 AWG, 1 PAIR, TWISTED, SHIELDED CABLE. CONNECT ALL DDC CONTROLLERS, TYPICAL. "DAISY-CHAIN" CONNECTIONS IN AND OUT OF CONTROLLER WITHOUT SPLICES.
4. DDC CONTROLLER, TYPICAL: SIEMENS MODEL PXC WITH BLN CONNECTIVITY. REFER TO RESPECTIVE CONTROL DIAGRAMS FOR FUNCTION.
5. FIBER OPTIC TRUNK INTERFACE DRIVER PER CODE JT SPECIFICATIONS.
6. FMCS ENCLOSURES: NEMA RATED, DEDICATED 120V, 15A, 5-15R DUPLEX RECEPTACLE. COORDINATE PANEL AND DEVICE NUMBER AND LABELING WITH GOVERNMENT MAINTENANCE CONTRACTOR, TYPICAL. PROVIDE NEMA 1 FOR INDOOR OR INSIDE ROOFTOP UNIT ENCLOSURE. PROVIDE NEMA 4A WHERE EXPOSED TO WEATHER.

DIAGRAM NOTES (CONTINUED):
7. ROOFTOP UNIT ENCLOSURE WITH FACTORY MOUNTED FMCS CONTROLS. CONTROL POWER WILL BE TAKEN OFF OF UNIT POWER. SEE M112 FOR ADDITIONAL INFORMATION.
8. UNIT DDC CONTROLLER, TYPICAL: MODEL PXM WITH FLN CONNECTIVITY. PROVIDE ROOF-RATED CONTROLLER FOR ROOFTOP UNITS. REFER TO RESPECTIVE CONTROL DIAGRAMS FOR FUNCTIONS.
9. VISUAL LCD SCREEN DISPLAY IN LOBBY. SEE ARCHITECTURAL PLAN FOR LOCATION. PROGRAM SCREEN TO TRACK BUILDING ENERGY USAGE FOR EACH FLOOR OF NORTH AND SOUTH WING.

1 FMCS (DDC) ARCHITECTURE
M113 REF. NONE SCALE: NONE

PROJECT STATUS: BID SET 04/30/09
ISSUE

MARK	DATE	DESCRIPTION	INITIAL

DRAWN	M CALLAHAN	DATE
DESIGNED	M CALLAHAN	DATE
CHECKED	S PAINTER	DATE
PROJMGR	J GRANT	DATE
REQUESTOR	R SCHULER	DATE
R&QA		DATE
SAFETY		DATE
SUPERVISOR	S FRANKEL	DATE

Ames Research Center
Moffet Field, California

N232 COLLABORATIVE SUPPORT FACILITY
HVAC
CONTROLS

SIZE D | CAGE CODE 25307 | A232-0800- | M113 | REV
SCALE | INDEX | SHEET | OF

DWG: R:\232\N232 Collaborative Support Facility\500_CAD\Drawings\M113.dwg User: jjho
DATE: Apr 30, 2009 - 1:17:30 pm Images:
Xrefs: XBDR-SHORT

SEQUENCE OF OPERATION

GENERAL

1. CONTROL SET POINTS: SET POINTS, HIGH LIMITS, AND LOW LIMITS SHALL BE PROGRAMMABLE BY FMCS. PROGRAM SET POINT, FEEDBACK, AND CONTROL RANGE FOR STABLE OPERATION, AND TO PREVENT SHORT CYCLING OF EQUIPMENT.
2. OCCUPANCY SCHEDULE: SCHEDULE SHALL BE PROGRAMMABLE BY FMCS. CHANGES MAY BE MADE BY REQUEST TO FMCS.
3. EQUIPMENT ENABLE: ALLOW EQUIPMENT TO BE STARTED DURING SCHEDULED OCCUPANCY, AND AS NOTED IN SEQUENCES BELOW, UNLESS LOCKED OUT FOR SERVICE.
4. EQUIPMENT MONITORING: MONITOR EQUIPMENT STATUS, UNLESS LOCKED OUT FOR SERVICE. DETERMINE FAN STATUS BY CURRENT SWITCH. DETERMINE PUMP STATUS BY PRESSURE DIFFERENTIAL OR FLOW SWITCH. DETERMINE EQUIPMENT STATUS FROM UNIT SUMMARY ALARM.
5. EQUIPMENT ALARMS: NOTIFY FMCS AND STOP EQUIPMENT IF EQUIPMENT FAILS TO START OR TO CONTINUE OPERATING WHEN COMMANDED AFTER ALLOWING SUFFICIENT TIME FOR START SEQUENCE TO COMPLETE. ALSO CLOSE ASSOCIATED ISOLATION AND STOP DEDICATED PUMP ASSOCIATED, WHEN EQUIPMENT FAIL. IDENTIFY SPECIFIC UNIT OR DEVICE THAT FAILED.

MORNING WARM UP

1. OPTIMIZE WARM-UP SEQUENCE START TIME BASED ON OUTSIDE AIR TEMPERATURE AND AVERAGE SPACE AIR TEMPERATURE RELATIVE TO ROOM TEMPERATURE SET POINT. PROGRAM START TIME TO HEAT ALL ZONES UP TO HEATING SETPOINT PRIOR TO SCHEDULED OCCUPANCY.
2. OPERATE RADIANT HEATING WALL PANELS AND RADIANT LOBBY SLABS TO PICK UP AND MAINTAIN SPACE TEMPERATURE TO OCCUPIED HEATING TEMPERATURE SET POINT. SEE HEATING SEQUENCE FOR CONTROL OF HEATING PANELS AND SLABS.

PRE-OCCUPANCY PURGE

1. DEDICATED OUTSIDE AIR SYSTEM (DOAS): OPERATE RESPECTIVE DOAS DURING ONE HOUR PERIOD PRIOR TO SCHEDULED OCCUPANCY. SUPPLY AIR AT ASHRAE MINIMUM OSA CFM AS LISTED ON EQUIPMENT SCHEDULE. DO NOT USE DEMAND CONTROLLED VENTILATION. SUPPLY AIR AT A TEMPERATURE NEUTRAL TO AVERAGE SPACE TEMPERATURE SET POINT. SEE DOAS SEQUENCE FOR CONTROL OF DOAS.

SPACE HEATING

1. OPERATE RADIANT HEATING PANELS AND RADIANT LOBBY FLOOR SLABS ONLY DURING SCHEDULED OCCUPANCY AND MORNING WARM-UP TO MAINTAIN ZONE AIR TEMPERATURE. SEE LOBBY HVAC FOR CONTROL OF LOBBY SPACES.
2. ZONE TEMPERATURE: DETERMINE ZONE OPERATIVE TEMPERATURE BY AVERAGING THE TEMPERATURE READING FROM ADJACENT BLACK BULB TEMPERATURE SENSORS.
3. RADIANT HEATING PANELS: SELF-REGULATING 2-WAY CONTROL VALVE MODULATES HEATING WATER FLOW RATE TO MAINTAIN OCCUPANT COMFORT (OCCUPANT ADJUSTABLE).
4. HEATING ZONE ISO VALVES: OPEN ASSOCIATED SUPPLY AND RETURN VALVES (MOV-5X) IF ANY ZONE TEMPERATURE IN THE WING SERVED IS BELOW HEATING SET POINT RANGE. CLOSE VALVES WHEN AVERAGE ZONE TEMPERATURE EXCEEDS HEATING SET POINT RANGE.
5. HEATING WATER SECONDARY PUMPS: COMMAND PUMPS (HWP-1, 2) TO OPERATE WHEN ANY HEATING ZONE ISO VALVES ARE OPEN, OR ANY RADIANT SLAB ZONE HEATING VALVE IS OPEN. SEE PUMP SEQUENCE FOR CONTROL OF PUMPS.
6. HEATING HEAT PUMP: CYCLE HEAT PUMP WHILE SECONDARY PUMPS ARE OPERATING, TO MAINTAIN HEATING WATER SUPPLY TEMPERATURE SET POINT. SEE HEAT PUMP SEQUENCE FOR CONTROL OF HEAT PUMP.
7. HEATING WATER SUPPLY TEMPERATURE SET POINT: REFER TO HEATING PANEL SCHEDULE, AND RADIANT SLAB SCHEDULE FOR DESIGN SECONDARY LOOP TEMPERATURE SET POINT. DURING OCCUPIED HOURS, ADJUST SET POINT LOWER, AS LONG AS ALL OPERATIVE TEMPERATURES ARE WITHIN HEATING CONTROL RANGE.

SPACE COOLING

1. OPERATE COOLING RADIANT CEILING PANELS, AND RADIANT LOBBY FLOOR SLABS ONLY DURING SCHEDULED OCCUPANCY TO MAINTAIN SPACE COOLING TEMPERATURE SET POINT. SEE LOBBY HVAC FOR CONTROL OF LOBBY SPACES.
2. ZONE TEMPERATURE: DETERMINE ZONE TEMPERATURE BY AVERAGING THE TEMPERATURE READING FROM ADJACENT BLACK BULB TEMPERATURE SENSORS.
3. COOLING ZONE ISO VALVES: OPEN ASSOCIATED SUPPLY AND RETURN VALVES (MOV-4XX) IF ANY ZONE TEMPERATURE ON THE FLOOR IS ABOVE COOLING SET POINT RANGE. CLOSE VALVES WHEN AVERAGE ZONE TEMPERATURE IS BELOW COOLING SET POINT RANGE, OR HEATING ZONE ISO VALVES FOR THE WING ARE OPEN.
4. CEILING RADIANT COOLING PANELS: MODULATE 2-WAY ZONE CONTROL VALVE TO MAINTAIN ZONE COOLING TEMPERATURE SET POINT.
5. CHILLED WATER SECONDARY PUMPS: COMMAND PUMPS (CHP-1, 2) TO OPERATE WHEN ANY COOLING ZONE ISO VALVE IS OPEN, OR ANY RADIANT SLAB COOLING VALVE IS OPEN. SEE PUMP SEQUENCE FOR CONTROL OF PUMPS.
6. COOLING HEAT PUMP: CYCLE HEAT PUMP WHILE SECONDARY PUMPS ARE OPERATING, TO MAINTAIN CHILLED WATER SUPPLY TEMPERATURE SET POINT. SEE HEAT PUMP SEQUENCE FOR CONTROL OF HEAT PUMP.
7. CHILLED WATER SUPPLY TEMPERATURE SET POINT: SECONDARY LOOP CHS TEMPERATURE SET POINT IS EQUAL TO GWS TEMPERATURE, WHILE ALL ZONES ARE BELOW MAXIMUM COOLING TEMPERATURE RANGE. ADJUST CHS SET POINT LOWER ONLY AS NEEDED TO KEEP ALL ZONE OPERATIVE TEMPERATURES WITHIN CONTROL RANGE. REFER TO CRCP SCHEDULE FOR DESIGN CHS TEMPERATURE.
8. CONDENSATION CONTROL: WHEN COOLING ISO VALVES ARE OPEN, CLOSE MOTORIZED WINDOWS AND START DOAS IF OSA DEW POINT EXCEEDS SUPPLY AIR DEW POINT TEMPERATURE SET POINT. OVERRIDE CHS TEMPERATURE CONTROL TO MAINTAIN MINIMUM SET POINT 1°F HIGHER THAN HIGHEST SPACE DEW POINT TEMPERATURE. CLOSE COOLING ZONE ISO VALVES UPON DETECTION OF MOISTURE BY LEAK DETECTION TAPE.

VENTILATION

1. ENABLE DOAS DURING SCHEDULED OCCUPANCY AND PRE-OCCUPANCY PURGE.
2. USE NATURAL VENTILATION WHENEVER PRACTICAL. SEE WINDOW CONTROL.
2. OPERATE DOAS WHEN OUTSIDE AIR TEMPERATURE IS LESS THAN 63°F, OR HIGHER THAN 82°F. SEE DOAS SEQUENCE FOR DOAS CONTROL.
3. CONDENSATION CONTROL OVERRIDE: START DOAS TO PREVENT CONDENSATION ON CEILING PANELS AS DESCRIBED UNDER WINDOW CONTROL ON SHEET M501.
3. MODULATE DOAS FAN SPEED TO MAINTAIN MINIMUM VENTILATION AIR FLOW AS SCHEDULED. OVERRIDE MINIMUM VENTILATION CONTROL TO MAINTAIN INDOOR AIR QUALITY BY DEMAND CONTROLLED VENTILATION.
4. DOAS PUMP (CHP-3, 4): OPERATE ASSOCIATED DOAS PUMP WHEN RESPECTIVE DOAS COMPRESSOR IS RUNNING.
5. SECONDARY CHILLED WATER PUMP: COMMAND PUMP TO OPERATE WHILE ANY DOAS PUMP IS OPERATING. SEE PUMP SEQUENCE FOR CONTROL OF PUMPS.
6. GROUND SOURCE PUMP: COMMAND PUMP TO START WHEN A SECONDARY PUMP IS OPERATING. SEE PUMP SEQUENCE FOR CONTROL OF PUMPS.
7. ZONE ISO DAMPERS: OPEN ZONE DAMPERS WHEN DOAS IS COMMANDED TO START.

WATER PUMPS

1. SECONDARY HEATING WATER PUMPS (HWP-1, 2):
   a. OPERATION: START AND STOP LEAD PUMP WHEN COMMANDED BY HEATING OR WARM-UP SEQUENCE. IF LEAD PUMP IS UNABLE TO MAINTAIN REQUIRED PRESSURE DIFFERENTIAL, START LAG PUMP. MAXIMUM PRESSURE DIFFERENTIAL SET POINT SHALL BE DETERMINED BY BALANCING AGENCY AT DESIGN WATER FLOW.
   b. PUMP SPEED: MODULATE PUMP SPEED TO MAINTAIN OPERATING PRESSURE DIFFERENTIAL SET POINT BETWEEN SUPPLY AND RETURN MAIN. OPERATE BOTH PUMPS AT SAME SPEED WHEN BOTH ARE OPERATING.
   c. PUMP ALTERNATION: ALTERNATE LEAD AND LAG PUMP WEEKLY.
   d. PUMP FAILURE: STOP FAILED PUMP. START OTHER PUMP, IF AVAILABLE.
   e. ALARMS: PUMP FAILURE, LOW LOOP DIFFERENTIAL PRESSURE.
2. SECONDARY CHILLED WATER PUMPS (CHP-1, 2): START AND STOP LEAD PUMP WHEN COMMANDED BY COOLING OR VENTILATION SEQUENCE. SEQUENCE PUMPS AS DESCRIBED FOR SECONDARY HEATING WATER PUMPS. RESET PRESSURE DIFFERENTIAL SET POINT LOWER IF ALL ZONE CONTROL VALVES ARE LESS THAN 90% OPEN.
3. GROUND SOURCE WATER PUMPS (GWP-1, 2): START AND STOP LEAD PUMP WHEN ANY SECONDARY CHILLED WATER PUMP OR HEATING WATER PUMP IS STARTED. SEQUENCE PUMPS AS DESCRIBED FOR SECONDARY HEATING WATER PUMPS.

DEDICATED OUTSIDE AIR UNITS (MAU-1 AND MAU-2)

1. UNIT OPERATION: ENABLE UNIT TO OPERATE DURING SCHEDULED OCCUPANCY, AND ONE HOUR PRIOR TO SCHEDULED OCCUPANCY FOR PRE-OCCUPANCY PURGE.
2. OUTSIDE AIR AND RELIEF AIR DAMPERS: OPEN OSA DAMPER PRIOR TO STARTING SUPPLY FAN. OPEN RELIEF DAMPER PRIOR TO STARTING RELIEF FAN. CLOSE DAMPER AFTER RESPECTIVE FAN IS STOPPED.
3. SUPPLY AIR FAN: START FAN ONE HOUR BEFORE SCHEDULED OCCUPANCY. PROVE OUTSIDE AIR AND RELIEF AIR DAMPERS ARE OPEN, BEFORE STARTING FAN. PROVE AT LEAST ONE PAIR OF SUPPLY AND RETURN ZONE ISO DAMPERS ARE OPEN, BEFORE STARTING FAN. STOP FAN WHEN WINDOWS ARE OPEN (NATURAL VENTILATION MODE). STOP FAN UPON DETECTION OF SMOKE BY ANY SMOKE DETECTOR, OR FIRE ALARM SYSTEM ALARM.
4. SUPPLY FAN SPEED: MODULATE FAN SPEED TO SUPPLY SCHEDULED MINIMUM OSA, AS MEASURED BY FLOW MEASURING STATION. PROVIDE ECONOMIZER OVERRIDE FOR FREE COOLING. PROVIDE DEMAND CONTROLLED VENTILATION (DCV) OVERRIDE TO MAINTAIN AIR QUALITY.
5. ECONOMIZER OVERRIDE: DURING DOAS OPERATION, INCREASE SUPPLY FAN SPEED AS REQUIRED TO MAINTAIN SUPPLY AIR TEMPERATURE SET POINT. LOCKOUT ECONOMIZER OVERRIDE WHEN OSA ENTHALPY IS HIGHER THAN RELIEF AIR ENTHALPY.
6. DEMAND CONTROLLED VENTILATION OVERRIDE (SUPPLY FAN): WHEN DOAS IS OPERATING AND SUPPLY AND RELIEF AIR ZONE ISO DAMPERS ARE OPEN, INCREASE SUPPLY FAN SPEED AS REQUIRED TO MAINTAIN ALL ZONE CO2 CONCENTRATIONS BELOW SET POINT IN THE OPERATING ZONES. TREND LOG OSA AND SPACE CO2 CONCENTRATION.
7. ENERGY WHEEL: ROTATE ENERGY WHEEL, EXCEPT DURING ECONOMIZER OVERRIDE. STOP ENERGY WHEEL WHEN OSA ENTHALPY IS LESS THAN RETURN AIR ENTHALPY WHILE DEHUMIDIFYING OR COOLING. UPON FAILURE OF CO2 SENSORS, FAN SPEED SHALL RESET TO SUPPLY MINIMUM VENTILATION AS LISTED ON SCHEDULE.
8. RELIEF AIR FAN: OPERATE FAN WHEN SUPPLY FAN IS OPERATING. START FAN AFTER PROOF OF OPEN RELIEF AIR DAMPER.
9. BUILDING PRESSURIZATION: WHEN SUPPLY FAN IS OPERATING, MODULATE RELIEF FAN SPEED TO MAINTAIN BUILDING STATIC PRESSURE IN RESPECTIVE BUILDING WING. CALIBRATE STATIC PRESSURE SET POINT FOR SLIGHT POSITIVE (+0.05"WG) PRESSURE IN WING SUPPLIED, WHEN DOORS AND WINDOWS ARE CLOSED.
10. DEMAND CONTROLLED VENTILATION OVERRIDE (RELIEF FAN): WHEN WINDOWS ARE IN FULL OPEN POSITION, OPEN RELIEF DAMPER AND START RESPECTIVE RELIEF FAN ONLY IF SPACE CO2 CONCENTRATION EXCEEDS SET POINT, MODULATE RELIEF FAN SPEED TO MAINTAIN CO2 CONCENTRATION BELOW SET POINT.
11. DX COOLING AND HEATING COIL: MODULATE COIL CAPACITY BY FACTORY CONTROLS TO MAINTAIN CONSTANT SUPPLY AIR TEMPERATURE SET POINT (65°F). START ASSOCIATED DOAS PUMP PRIOR TO COMPRESSOR START UP.
12. DEHUMIDIFICATION: ONLY WHEN CEILING RADIANT COOLING PANELS ARE OPERATING, LOWER SUPPLY AIR TEMPERATURE SET POINT TO MAINTAIN MAXIMUM RETURN AIR DEW POINT TEMPERATURE AND ALL SPACE DEW POINT TEMPERATURES 1°F BELOW CHS TEMPERATURE.
13. REHEAT COIL: MODULATE REFRIGERANT HOT GAS FLOW BY FACTORY CONTROLS TO MAINTAIN SUPPLY AIR TEMPERATURE SET POINT.
14. SOURCE WATER COOLED CONDENSER: MODULATE WATER FLOW FROM DOAS PUMP BY FACTORY SUPPLIED TEMPERATURE REGULATOR.
15. SPACE HUMIDITY: TREND LOG SPACE AND RETURN AIR DEW POINT TEMPERATURE.
16. FILTER BANK: MONITOR DIFFERENTIAL PRESSURE ACROSS BANK. SEE FINAL APD IN SCHEDULE FOR HIGH PRESSURE LIMIT.
17. ALARMS: HIGH SUPPLY AIR DEW POINT (SET POINT +1°F), HIGH SPACE DEW POINT (EQUAL TO CHS TEMPERATURE), LOW SPACE HUMIDITY (35%), FILTER PRESSURE DIFFERENTIAL HIGH LIMIT.

WATER-TO-WATER HEAT PUMPS

1. GENERAL: ENABLE ALL HEAT PUMPS DURING SCHEDULED OCCUPANCY. ENABLE HEATING HEAT PUMP ALSO DURING MORNING WARM-UP.
2. HEAT PUMP PRIMARY PUMP (HPP-1, HPP-2, HPP-3, OR HPP-4): START ASSOCIATED LOAD WATER PRIMARY PUMP WHEN LEAD HEAT PUMP IS COMMANDED TO START BY A CONTROL SEQUENCE.
3. SOURCE WATER ISOLATION VALVE: OPEN ASSOCIATED ISOLATION VALVE (MOV-2A, MOV-2B, OR MOV-2C) WHEN A PRIMARY PUMP IS STARTED
4. SOURCE WATER PRIMARY PUMP: START PUMP (HPP-5) WHEN LOAD WATER PRIMARY PUMP (HPP-4) IS STARTED.
5. LEAD HEAT PUMP: START COMMANDED HEAT PUMP UPON PROOF OF LOAD WATER FLOW AND GROUND SOURCE WATER FLOW BY FLOW SWITCHES. MODULATE HEAT PUMP THERMAL CAPACITY BY INTERNAL FACTORY CONTROLS TO MAINTAIN LEAVING LOAD WATER TEMPERATURE SET POINT. AS DETERMINED UNDER SPACE COOLING NOTES. SEND SUMMARY ALARM TO FMCS, UPON HEAT PUMP MALFUNCTION.
6. LAG HEAT PUMP: COMMAND LAG HEAT PUMP TO START WHEN LEAD HEAT PUMP CANNOT MAINTAIN LOAD TEMPERATURE SET POINT (+ 2°F FOR COOLING, -2°F FOR HEATING). USE SAME START SEQUENCE DESCRIBED ABOVE. MAINTAIN SAME LEAVING LOAD WATER TEMPERATURE SET POINT AS LEAD HEAT PUMP.
7. CHANGE-OVER VALVES: WHEN LAG HEATING HEAT PUMP (HP-3) IS COMMANDED TO START FOR HEATING DUTY, OPEN BOTH SUPPLY AND RETURN VALVES (MOV-6B), AND CLOSE BOTH SUPPLY AND RETURN VALVES (MOV-6A), AND SWITCH HP-3 REVERSING VALVE (INSIDE UNIT) FROM COOLING TO HEATING. OTHERWISE, CHANGE-OVER VALVES (MOV-6A AND MOV-6B) SHOULD BE MAINTAINED IN NORMAL POSITION FOR HP-3 COOLING DUTY.
9. CHILLED WATER VALVE: MODULATE 3-WAY CHILLED WATER INJECTION VALVE (MOV-3) TO MAINTAIN SECONDARY LOOP CHILLED WATER SUPPLY SET POINT. SEE SPACE COOLING FOR SET POINT CONTROL.
10. LEAVING CHILLED WATER TEMPERATURE: ADJUST LEAVING WATER SET POINT TO MINIMIZE BYPASS OF CHILLED WATER THROUGH INJECTION VALVE (MOV-3). IF MORE THAN ONE COOLING HEAT PUMP IS OPERATING, ADJUST LEAVING WATER SET POINT TO BE EQUAL FOR ALL OPERATING HEAT PUMPS.
11. LEAVING HEATING WATER TEMPERATURE: ADJUST LEAVING WATER SET POINT TO MAINTAIN SECONDARY LOOP HEATING WATER SUPPLY SET POINT, AND MINIMIZE CYCLING OF HEAT PUMP.
12. HEAT PUMP ALTERNATION: ALTERNATE LEAD COOLING HEAT PUMP WEEKLY.
13. ALARMS: HEAT PUMP MALFUNCTION, ANY FLOW SWITCH INDICATING NO FLOW FOR COMMANDED HEAT PUMP

LOBBY HVAC

1. RADIANT FLOOR SLAB ZONE CIRCULATING PUMPS (RSP-1, RSP-3): OPERATE PUMPS DURING SCHEDULED OCCUPANCY, AND DURING WARM-UP PERIOD.
2. RADIANT FLOOR SLAB ZONE VALVES: OPEN HEATING ISO VALVES, AND MODULATE 2-WAY HEATING ZONE VALVES TO MAINTAIN ROOM HEATING TEMPERATURE SET POINT. OPEN COOLING ISO VALVE, AND MODULATE 2-WAY COOLING ZONE VALVES TO MAINTAIN ROOM COOLING TEMPERATURE SET POINT. PROGRAM DEADBAND BETWEEN HEATING AND COOLING SET POINT TO PREVENT SIMULTANEOUS HEATING AND COOLING.
3. NATURAL VENTILATION: MINIMUM VENTILATION IS PROVIDED BY INFILTRATION THROUGH MANUAL OPERATION OF LOBBY DOORS BY OCCUPANTS, AND EXHAUST OF THE LUNCH AREA BY TEF-1 DURING SCHEDULED OCCUPANCY. CLOSE WINDOWS WHEN OSA TEMPERATURE IS BELOW 63°F. OPEN WINDOWS TO MINIMUM POSITION WHEN OSA TEMPERATURE IS BETWEEN 63°F AND 72°F. POSITION WINDOWS TO FULL OPEN POSITION WHEN OSA TEMPERATURE IS ABOVE 72°F. CLOSE OPERABLE WINDOWS UPON DETECTION OF RAIN.
4. DEMAND CONTROLLED VENTILATION: WHEN WINDOWS ARE IN FULL OPEN POSITION, AND CO2 CONCENTRATION IS ABOVE SET POINT, START ATRIUM VENTILATION FAN (EF-1). MODULATE FAN SPEED TO MAINTAIN CO2 CONCENTRATION BELOW SET POINT.
5. ECONOMIZER OVERRIDE: OVERRIDE CO2 CONTROL OPEN WINDOWS FULLY AND OPERATE ATRIUM VENTILATION FAN (EF-1) WHEN SPACE TEMPERATURE RISES ABOVE ROOM COOLING TEMPERATURE SET POINT, AND ABOVE OSA TEMPERATURE. MODULATE FAN SPEED TO MAINTAIN ROOM COOLING TEMPERATURE SET POINT.

MISCELLANEOUS

1. TOILET EXHAUST FAN (TEF-1) AND JANITOR EXHAUST FAN (EF-6): OPERATE CONTINUOUSLY DURING SCHEDULED OCCUPANCY.
2. ELECTRIC ROOM EXHAUST FANS (EF-2 AND EF-4): START FAN WHEN ROOM TEMPERATURE EXCEEDS 85°F. MODULATE FAN SPEED TO MAINTAIN ROOM TEMPERATURE BELOW 95°F SET POINT. PROGRAM MINIMUM FAN SPEED FOR STABLE OPERATION WITHOUT OVERHEATING FAN MOTOR OR VFD. NOTIFY FMCS WHEN SPACE TEMPERATURE EXCEEDS 104°F.
3. COMM AND TEL/DATA ROOMS: DUCTLESS DX FAN COILS, AND ASSOCIATED CONDENSING UNITS, MUST BE AVAILABLE TO OPERATE AT ANY TIME (24 HR/7 DAYS A WEEK). UNIT FACTORY THERMOSTATIC CONTROLLER SHALL CONTROL AND OPERATE INDOOR AND OUTDOOR UNITS TO MAINTAIN ROOM TEMPERATURE BELOW 77°F SET POINT. VERIFY SET POINT WITH TENANT. NOTIFY FMCS WHEN SPACE TEMPERATURE EXCEEDS SET POINT BY +3°F.
4. ELEVATOR MACHINE ROOM: SAME AS COMM AND TEL/DATA ROOMS. MAINTAIN ROOM TEMPERATURE BELOW 95°F SET POINT. NOTIFY FMCS WHEN SPACE TEMPERATURE EXCEEDS 100°F.
5. MECHANICAL EQUIPMENT ROOM: OPEN INTAKE DAMPER AND START EXHAUST FAN (EF-3) WHEN ROOM TEMPERATURE EXCEEDS 85°F. MODULATE FAN SPEED TO MAINTAIN ROOM TEMPERATURE BELOW 95°F SET POINT. PROGRAM MINIMUM FAN SPEED FOR STABLE OPERATION WITHOUT OVERHEATING FAN MOTOR OR VFD. NOTIFY FMCS WHEN SPACE TEMPERATURE EXCEEDS 104°F. SEE ALSO REFRIGERANT PURGE.
6. REFRIGERANT PURGE: UPON DETECTION OF REFRIGERANT LEAK IN MER OR ACTIVATION OF EMERGENCY BREAK-GLASS SWITCH, NOTIFY FACP, OPEN INTAKE DAMPER, START AND OPERATE EXHAUST FAN (EF-3) AT FULL SPEED, AND DE-ENERGIZE ALL ELECTRICALLY POWERED EQUIPMENT AND DEVICES IN EQUIPMENT ROOM. PROVIDE KEYED CONTROL OUTSIDE MER FOR EXHAUST FAN. PROVIDE SIGNAL LIGHTS TO INDICATE FAN OPERATION BASED ON ROOM PRESSURE DIFFERENTIAL. (MINIMUM SET POINT IS -0.05"WG)
7. COMBINATION FIRE & SMOKE DAMPERS: STOP ALL SUPPLY AND RELIEF FANS, AND CLOSE ALL FIRE AND SMOKE DAMPERS UPON DETECTION OF SMOKE OR HEAT BY FACP, OR ANY SMOKE DETECTOR.
8. WINDOW CONTROL: CLOSE MOTORIZED WINDOWS WHEN OSA TEMPERATURE IS BELOW 63°F, OR ABOVE 82°F. OPEN MOTORIZED WINDOWS TO MINIMUM POSITION WHEN OSA TEMPERATURE IS BETWEEN 63°F AND 72°F, AND BETWEEN 77°F AND 82°F. POSITION MOTORIZED WINDOWS TO FULL OPEN POSITION WHEN OSA TEMPERATURE IS 72°F AND 77°F. CLOSE MOTORIZED WINDOWS UPON DETECTION OF RAIN. CLOSE MOTORIZED WINDOWS WHEN INTERIOR LIGHT LEVEL EXCEEDS 100 FC. CLOSE MOTORIZED WINDOWS AND START DOAS WHEN SPACE DEW POINT TEMPERATURE EXCEEDS CHS TEMPERATURE WHILE COOLING. SEE SHEET M501 AND M502.
9. WINDOW BLIND CONTROL: LOWER BLINDS OVER 50% OF FIXED GLAZING, WHEN INTERIOR LIGHT LEVEL EXCEEDS 50 FC. LOWER BLINDS FULLY, WHEN INTERIOR LIGHT LEVEL EXCEEDS 100 FC. SEE SHEETS M501 AND M502.
10. RED/GREEN LIGHTS: ILLUMINATE RED LIGHT WHEN OPERABLE WINDOWS ARE CLOSED, OR OPEN TO MINIMUM POSITION. ILLUMINATE GREEN LIGHT WHEN OPERABLE WINDOWS ARE OPEN. SEE SHEETS M501 AND M502.
11. GROUND SOURCE WATER VALVE: MODULATE VALVE POSITION TO MAINTAIN CHILLED WATER SUPPLY SET POINT. CLOSE VALVE WHEN ANY COOLING WATER-TO-WATER HEAT PUMP IS OPERATING.

HVAC CONTROL NOTES

1. DESIGN AND INSTALL CONTROL SYSTEM TO PERFORM AND FUNCTION AS REQUIRED BY SEQUENCE OF OPERATION. DESIGN AND INSTALLATION SHALL CONFORM TO AMES STANDARDS FOR FMCS INSTALLATIONS PER SPECIFICATIONS. PROVIDE ALL EQUIPMENT, COMPONENTS, WIRING, CONDUIT, CONNECTIONS AND PROGRAMMING NECESSARY FOR A FULLY FUNCTIONAL SYSTEM.
2. INSTALL ALL WIRING AND CABLES IN CONDUIT, AS SPECIFIED IN DIVISION 26. MINIMUM CONDUIT SIZE IS 3/4". LOW VOLTAGE POWER, SIGNAL AND DATA WIRING AND CABLES SHALL BE PROVIDED BY DIVISION 23. SEE ELECTRICAL DRAWINGS FOR OTHER RELATED WORK.
3. COORDINATE CONTROLS WITH AMES FMCS SYSTEM. SUBMIT CUT SHEETS FOR ALL PROPOSED FMCS EQUIPMENT, INCLUDING WIRING DIAGRAMS AND CONTROL DETAILS.
4. PROGRAM AMES FMCS AS REQUIRED BY SEQUENCE OF OPERATION. COORDINATE FMCS PROGRAMING WITH GOVERNMENT FMCS COORDINATOR. PROGRAMMING MUST BE DONE BY SEIMENS.
5. PROVIDE NEW FMCS PANELS AND ENCLOSURES AS NEEDED TO ACCOMMODATE ALL SPECIFIED POINTS. PAINT PANEL AND JUNCTION BOX COVERS, AND CONDUIT FITTINGS AND CONNECTORS "FMCS BLUE" FOR FMCS-RELATED CONTROL WIRING AND FIELD DEVICES. "FMCS BLUE" IS FULLER O'BRIAN ROYAL BLUE NO. RFK 505-S4, OR APPROVED EQUAL. SUBMIT SAMPLE FOR APPROVAL PRIOR TO APPLICATION.
6. ALL CONTROL DEVICES, WIRING AND CONDUIT SHALL BE NEW. SPLICING OF WIRES IS NOT ACCEPTABLE.
7. PROVIDED PROTECTED POWER TO ALL CONTROL PANELS AND DEVICES. EXTEND 24 VAC POWER TO ALL LOW VOLTAGE CONTROL DEVICES FROM LOCAL PANEL OR CONTROLLER.
8. SENSORS AND INDICATING DEVICES MONITORED BY FMCS: 4-20mA OUTPUT.
9. GROUND LOW VOLTAGE ANALOG TSP CABLE SHIELD IN LOCAL PANEL. GROUND LOW VOLTAGE TSP CABLE FOR DIGITAL CONTROLS AT FIELD DEVICE.
9. REFER TO M501 FOR WINDOW AND CONDENSATION CONTROL LAYOUT AND SEQUENCE OF OPERATION.
10. REFER TO M601 AND M602 FOR DESIGN OPERATING CONDITIONS. DESIGN SET POINTS WILL APPROXIMATE THESE CONDITIONS. OPERATING SET POINTS WILL BE ADJUSTED FOR PART LOAD CONDITIONS AS DESCRIBED IN SEQUENCE.
11. ALL VFD'S MUST BE ABLE TO COMMUNICATE THROUGH FLN CABLE.
12. REFER TO SHEETS M501 AND M502 FOR ADDITIONAL INFORMATION.

PROJECT STATUS

BID SET 04/30/09

ISSUE

MARK	DATE	DESCRIPTION	INITIAL

		DATE
DRAWN	M CALLAHAN	
DESIGNED	M CALLAHAN	
CHECKED	S PAINTER	
PROJMGR	J GRANT	
REQUESTOR	R SCHULER	
R&QA		
SAFETY		
SUPERVISOR	S FRANKEL	

Ames Research Center
Moffet Field, California

N232 COLLABORATIVE SUPPORT FACILITY
CONTROLS
SEQUENCE OF OPERATION

SIZE	CAGE CODE		REV
D	25307	A232-0800- M114	
SCALE		INDEX	SHEET OF

DWG: R:\232\N232 Collaborative Support Facility\500_CAD\CAD\Drawings\M114.dwg User: jjho
DATE: Apr 30, 2009 - 1:17:10 pm Images:
Xrefs: RBDR-SHORT

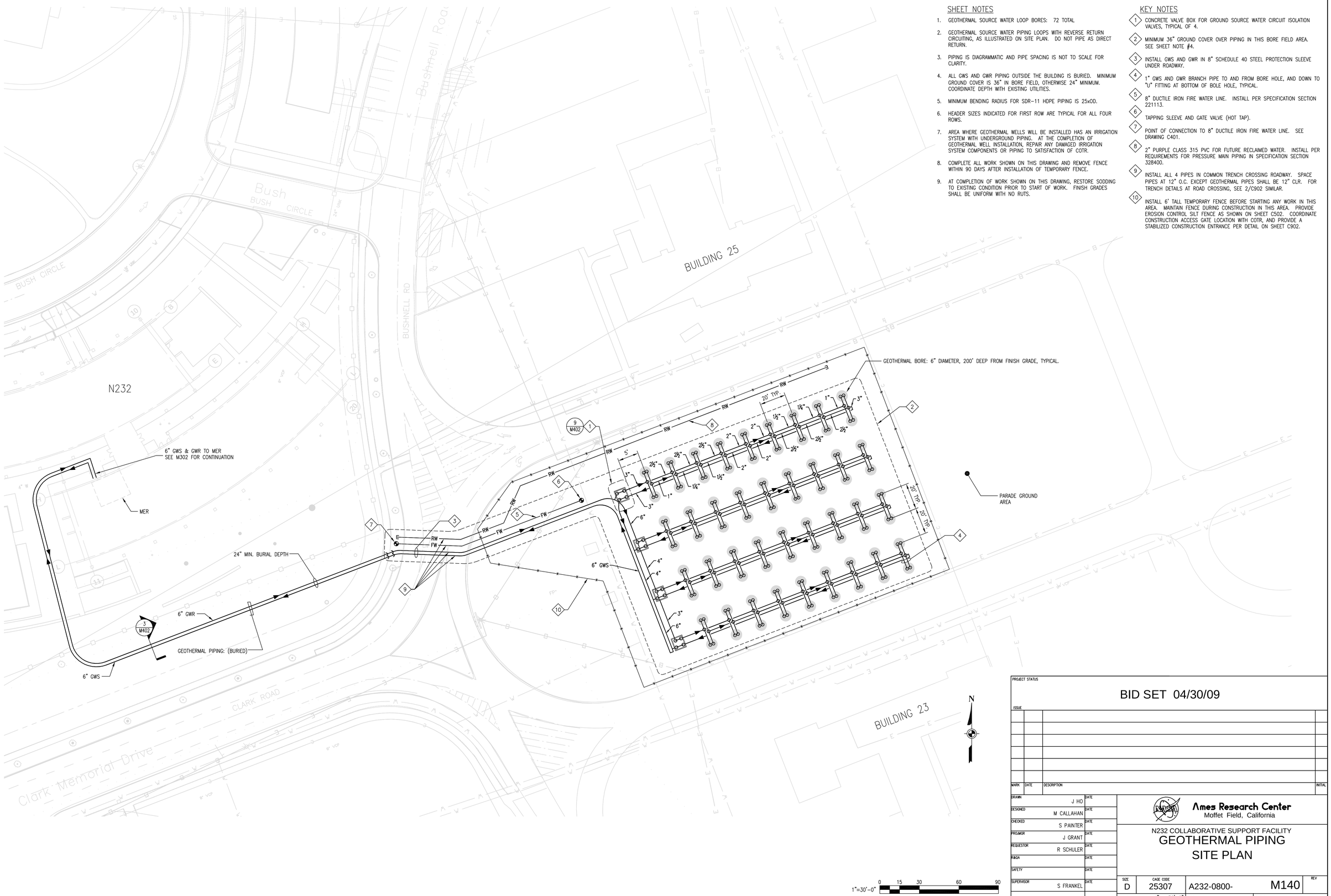

SHEET NOTES

1. GEOTHERMAL SOURCE WATER LOOP BORES: 72 TOTAL
2. GEOTHERMAL SOURCE WATER PIPING LOOPS WITH REVERSE RETURN CIRCUITING, AS ILLUSTRATED ON SITE PLAN. DO NOT PIPE AS DIRECT RETURN.
3. PIPING IS DIAGRAMMATIC AND PIPE SPACING IS NOT TO SCALE FOR CLARITY.
4. ALL GWS AND GWR PIPING OUTSIDE THE BUILDING IS BURIED. MINIMUM GROUND COVER IS 36" IN BORE FIELD, OTHERWISE 24" MINIMUM. COORDINATE DEPTH WITH EXISTING UTILITIES.
5. MINIMUM BENDING RADIUS FOR SDR-11 HDPE PIPING IS 25xOD.
6. HEADER SIZES INDICATED FOR FIRST ROW ARE TYPICAL FOR ALL FOUR ROWS.
7. AREA WHERE GEOTHERMAL WELLS WILL BE INSTALLED HAS AN IRRIGATION SYSTEM WITH UNDERGROUND PIPING. AT THE COMPLETION OF GEOTHERMAL WELL INSTALLATION, REPAIR ANY DAMAGED IRRIGATION SYSTEM COMPONENTS OR PIPING TO SATISFACTION OF COTR.
8. COMPLETE ALL WORK SHOWN ON THIS DRAWING AND REMOVE FENCE WITHIN 90 DAYS AFTER INSTALLATION OF TEMPORARY FENCE.
9. AT COMPLETION OF WORK SHOWN ON THIS DRAWING, RESTORE SODDING TO EXISTING CONDITION PRIOR TO START OF WORK. FINISH GRADES SHALL BE UNIFORM WITH NO RUTS.

KEY NOTES

1. CONCRETE VALVE BOX FOR GROUND SOURCE WATER CIRCUIT ISOLATION VALVES, TYPICAL OF 4.
2. MINIMUM 36" GROUND COVER OVER PIPING IN THIS BORE FIELD AREA. SEE SHEET NOTE #4.
3. INSTALL GWS AND GWR IN 8" SCHEDULE 40 STEEL PROTECTION SLEEVE UNDER ROADWAY.
4. 1" GWS AND GWR BRANCH PIPE TO AND FROM BORE HOLE, AND DOWN TO "U" FITTING AT BOTTOM OF BOLE HOLE, TYPICAL.
5. 8" DUCTILE IRON FIRE WATER LINE. INSTALL PER SPECIFICATION SECTION 221113.
6. TAPPING SLEEVE AND GATE VALVE (HOT TAP).
7. POINT OF CONNECTION TO 8" DUCTILE IRON FIRE WATER LINE. SEE DRAWING C401.
8. 2" PURPLE CLASS 315 PVC FOR FUTURE RECLAIMED WATER. INSTALL PER REQUIREMENTS FOR PRESSURE MAIN PIPING IN SPECIFICATION SECTION 328400.
9. INSTALL ALL 4 PIPES IN COMMON TRENCH CROSSING ROADWAY. SPACE PIPES AT 12" O.C. EXCEPT GEOTHERMAL PIPES SHALL BE 12" CLR. FOR TRENCH DETAILS AT ROAD CROSSING, SEE 2/C902 SIMILAR.
10. INSTALL 6' TALL TEMPORARY FENCE BEFORE STARTING ANY WORK IN THIS AREA. MAINTAIN FENCE DURING CONSTRUCTION IN THIS AREA. PROVIDE EROSION CONTROL SILT FENCE AS SHOWN ON SHEET C502. COORDINATE CONSTRUCTION ACCESS GATE LOCATION WITH COTR, AND PROVIDE A STABILIZED CONSTRUCTION ENTRANCE PER DETAIL ON SHEET C902.

PROJECT STATUS

BID SET 04/30/09

ISSUE

MARK	DATE	DESCRIPTION	INITIAL

		DATE
DRAWN	J HO	
DESIGNED	M CALLAHAN	
CHECKED	S PAINTER	
PROJMGR	J GRANT	
REQUESTOR	R SCHULER	
R&QA		
SAFETY		
SUPERVISOR	S FRANKEL	

Ames Research Center
Moffet Field, California

N232 COLLABORATIVE SUPPORT FACILITY
GEOTHERMAL PIPING
SITE PLAN

SIZE	CAGE CODE		REV
D	25307	A232-0800- M140	
SCALE 1" = 30'-0"	INDEX	SHEET OF	

DWG: R:\232\N232 Collaborative Support Facility\500_CAD\CAD\Drawings\M140.dwg User: jjho
DATE: Apr 30, 2009 11:58 pm Images
Xrefs: "Xctlp01" "Xsite01" "Xcutsd01" "Xmedsite-existing utilities" "XBDR-SHORT" "site pain with geothermal wells in parade ground

SHEET NOTES

1. SEE SHEET M601 FOR EQUIPMENT SCHEDULES

KEY NOTES

1. PLENUM DIVIDER EMPLOYED IN RAISED ACCESS FLOOR FOR AIR DISTRIBUTION (DIVIDER PROVIDED BY RAISED FLOOR VENDOR).
2. HWS & HWR BELOW RAISED FLOOR.
3. INSTALL PUMP RSP-3, PIPING AND VALVES IN UTILITY SPACE WITH ACCESS FROM MEN 105, FOR LOBBY RADIANT HEATING AND COOLING SYSTEM. SEE PIPING DIAGRAM M110 FOR DETAIL.
4. TERMINATE DUCT AT RAISED FLOOR WITH WMS IN FLOOR OPENING FOR DISCHARGE TO UNDER FLOOR PLENUM.

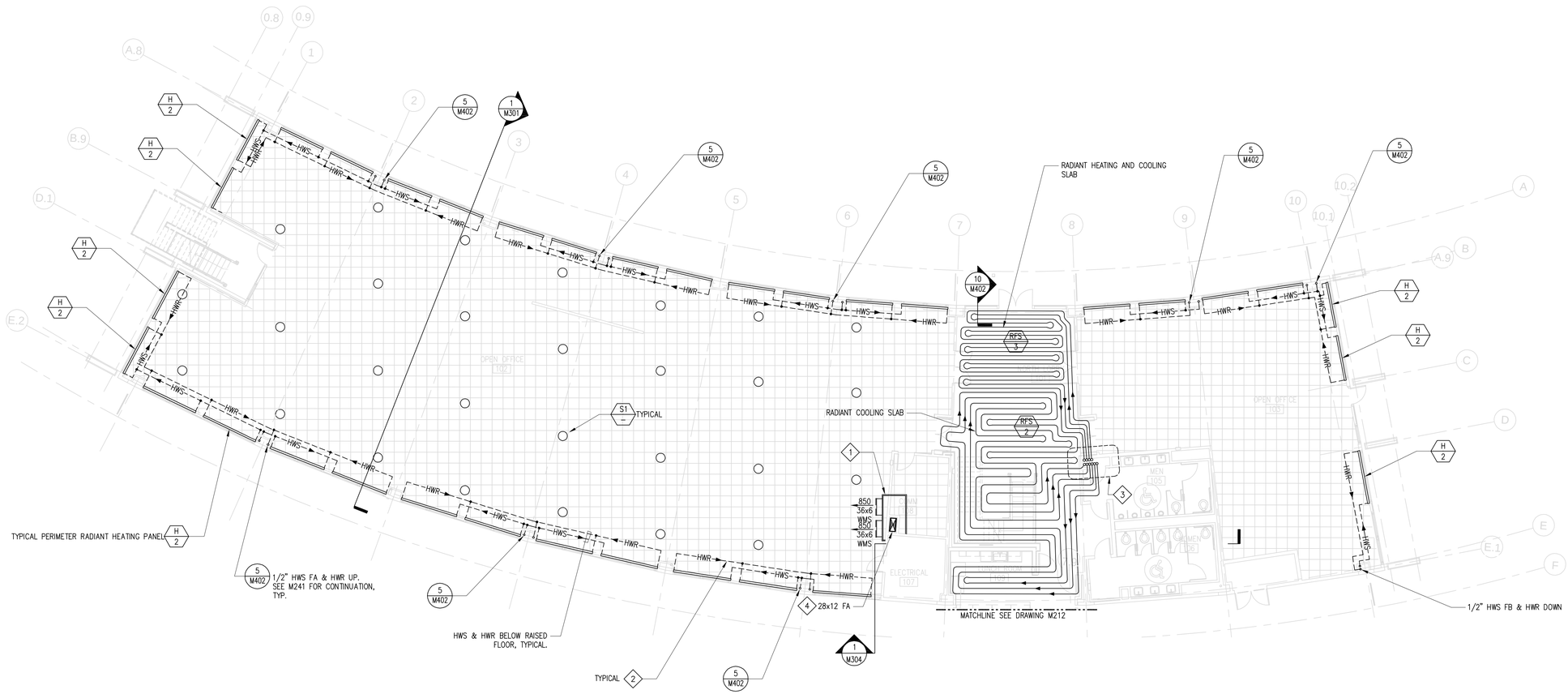

PROJECT STATUS

BID SET 04/30/09

ISSUE			
MARK	DATE	DESCRIPTION	INITIAL

KEY PLAN

NORTH ARROW

BLDG NORTH / TRUE NORTH

3/32"=1' 0 6 12 24 32

DRAWN	J HO	DATE
DESIGNED	M CALLAHAN	DATE
CHECKED	S PAINTER	DATE
PROJMGR	J GRANT	DATE
REQUESTOR	R SCHULER	DATE
R&QA		DATE
SAFETY		DATE
SUPERVISOR	S FRANKEL	DATE

Ames Research Center
Moffet Field, California

N232 COLLABORATIVE SUPPORT FACILITY

LOW LEVEL MECHANICAL
PARTIAL FIRST FLOOR PLAN
NORTH WING

SIZE	CAGE CODE			REV
D	25307	A232-0800-	M211	
SCALE 3/32" = 1'-0"	INDEX		SHEET OF	

DWG: R:\232\N232 Collaborative Support Facility\500_CAD\CAD\Drawings\M211.dwg User: jjho
DATE: Apr 30, 2009 - 11:23 pm Images: "XMFP01" "XMRG01" "XBDR-SHORT" "XMFP01-SPACEPLAN-N232_S09_CENTRAL_rvt-1-Level1Export
Xrefs: "XMFP01"

SHEET NOTES

1. SEE SHEET M601 FOR EQUIPMENT SCHEDULES
2. TERMINATE DUCT AT RAISE FLOOR WITH FLOOR OPENING FOR DISCHARGE TO UNDER FLOOR PLENUM.

KEY NOTES

1. PLENUM DIVIDER EMPLOYED IN RAISED ACCESS FLOOR FOR AIR DISTRIBUTION (DIVIDER PROVIDED BY RAISED FLOOR VENDOR).
2. HWS & HWR BELOW RAISED FLOOR.

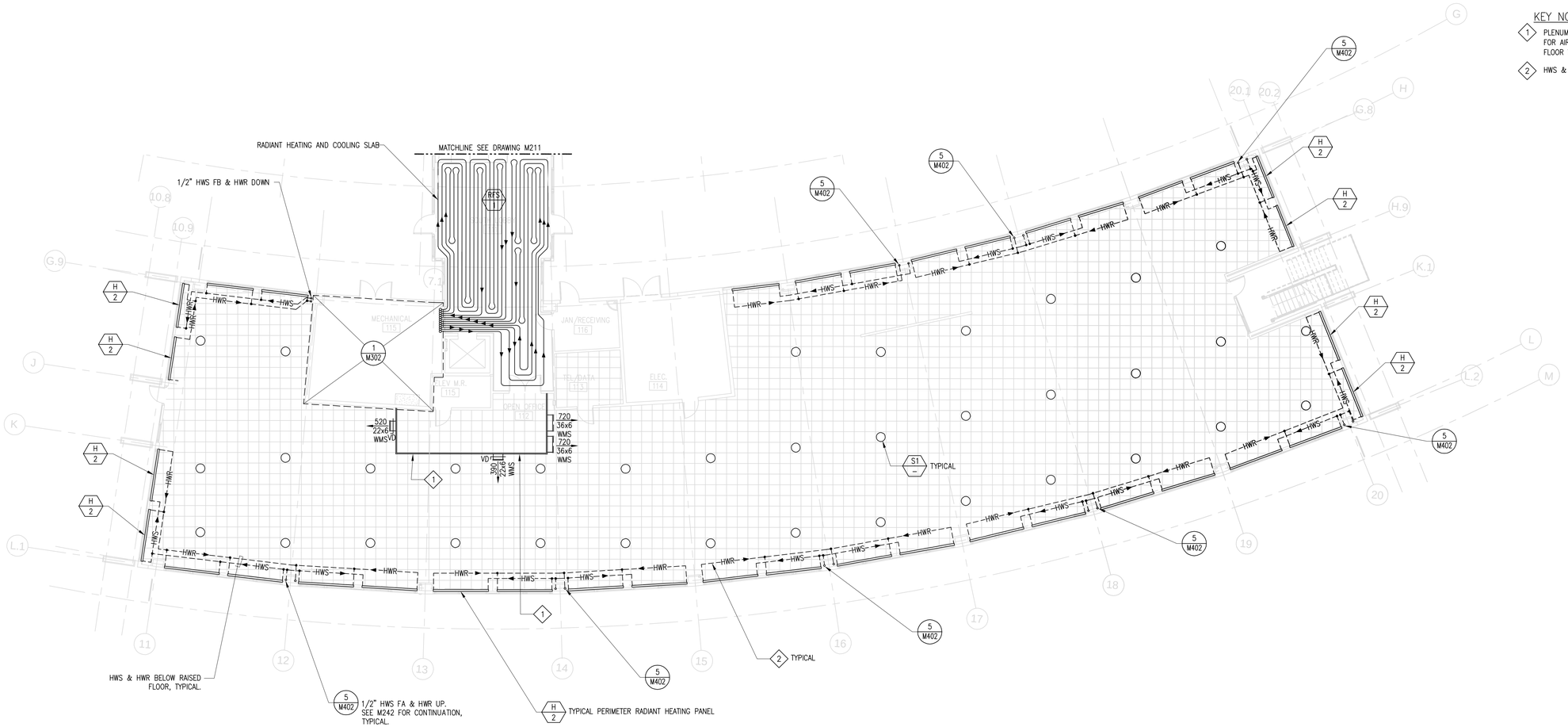

DWG: R:\A232\N232 Collaborative Support Facility\500_CAD\CAD\Drawings\M212.dwg User: jjho
DATE: Apr 20, 2009 - 11:08 am Images:
Xrefs: "xAFP01" "xARC01" "xBDR-SHORT" "xMTP01" "xAFP01-SPACEPLAN-N232_S09_CENTRAL-rvt-1-Level1Export

PROJECT STATUS

BID SET 04/30/09

ISSUE

MARK	DATE	DESCRIPTION	INITIAL

KEY PLAN

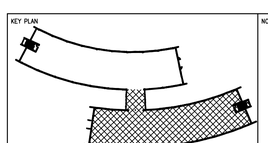

NORTH ARROW

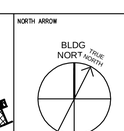

3/32"=1' 0 6 12 24 32

		DATE
DRAWN	J HO	
DESIGNED	M CALLAHAN	
CHECKED	S PAINTER	
PROJMGR	J GRANT	
REQUESTOR	R SCHULER	
R&QA		
SAFETY		
SUPERVISOR	S FRANKEL	

Ames Research Center
Moffet Field, California

N232 COLLABORATIVE SUPPORT FACILITY

LOW LEVEL MECHANICAL PARTIAL FIRST FLOOR PLAN SOUTH WING

SIZE	CAGE CODE		REV
D	25307	A232-0800- M212	

SCALE 3/32" = 1'-0" INDEX SHEET OF

SHEET NOTES

1. SEE SHEET M601 FOR EQUIPMENT SCHEDULES

KEY NOTES

1. PLENUM DIVIDER EMPLOYED IN RAISED ACCESS FLOOR FOR AIR DISTRIBUTION (DIVIDER PROVIDED BY RAISED FLOOR VENDOR).
2. PROVIDE FSD AT STRUCTURAL FLOOR PENETRATION.
3. HWS & HWR BELOW RAISED FLOOR.
4. FMCS PANEL: 28"Wx36"Hx8" DEEP
5. 1/2" HWS FB & HWR DOWN. SEE M241 FOR CONTINUATION.
6. TERMINATE DUCT AT RAISED FLOOR WITH WMS IN FLOOR OPENING FOR DISCHARGE TO UNDER FLOOR PLENUM.

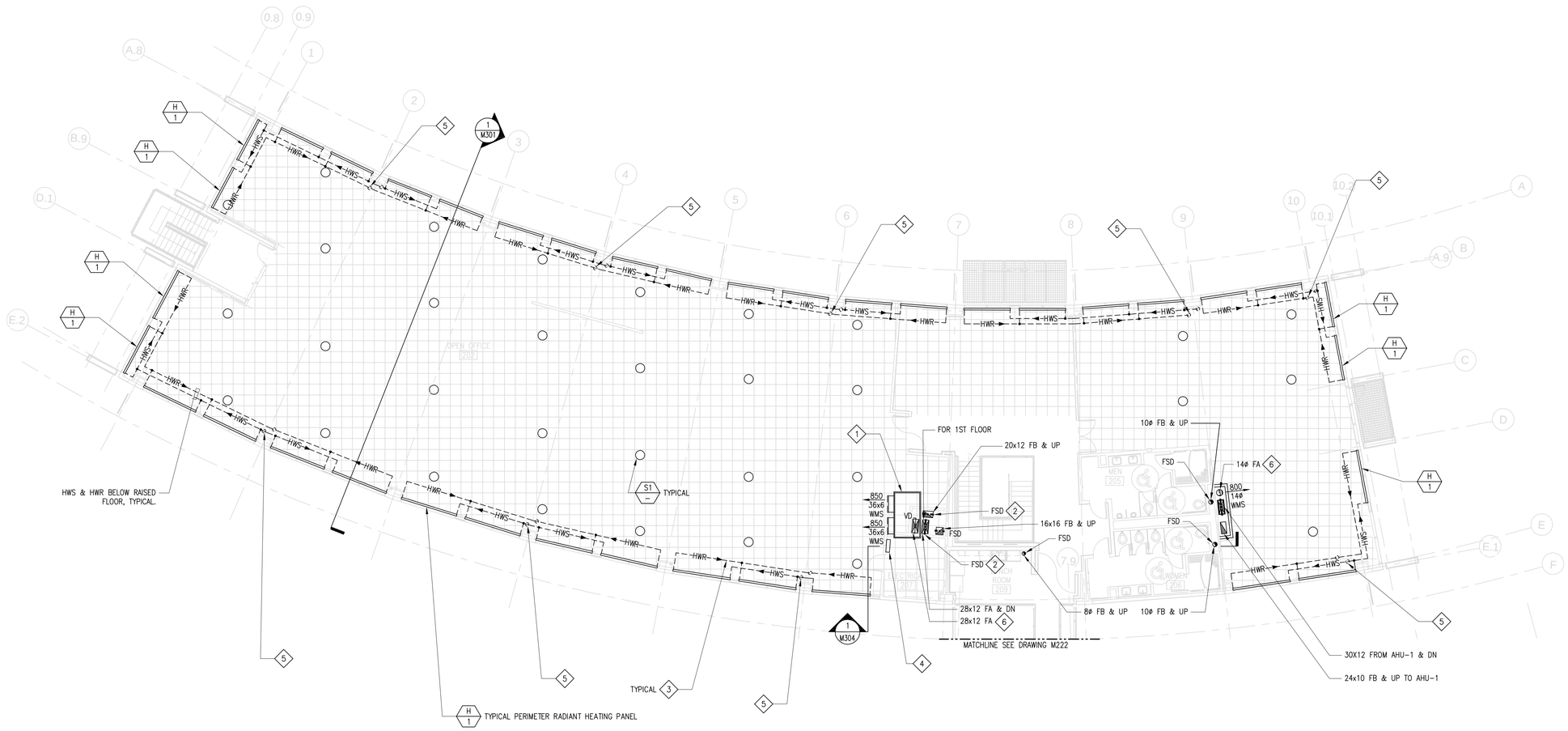

PROJECT STATUS

BID SET 04/30/09

ISSUE			
MARK	DATE	DESCRIPTION	INITIAL

KEY PLAN

NORTH ARROW

BLDG NORTH — TRUE NORTH

3/32"=1' 0 6 12 24 32

DRAWN	J HO	DATE
DESIGNED	M CALLAHAN	DATE
CHECKED	S PAINTER	DATE
PROJMGR	J GRANT	DATE
REQUESTOR	R SCHULER	DATE
R&QA		DATE
SAFETY		DATE
SUPERVISOR	S FRANKEL	DATE

Ames Research Center
Moffet Field, California

N232 COLLABORATIVE SUPPORT FACILITY

LOW LEVEL MECHANICAL PARTIAL SECOND FLOOR PLAN NORTH WING

SIZE	CAGE CODE		REV
D	25307	A232-0800- M221	
SCALE 3/32" = 1'-0"		INDEX	SHEET OF

DWG: R:\232\W232-Collaborative Support Facility\500_CAD\CAD\Drawings\M221.dwg User: jlho
DATE: Apr 30, 2009 - 1:55:49 pm Images:
Xrefs: "AFP02" "XBDR-SHORT" "AFP02"

SHEET NOTES

1. SEE SHEET M601 FOR EQUIPMENT SCHEDULES

KEY NOTES

1. PLENUM DIVIDER EMPLOYED IN RAISED ACCESS FLOOR FOR AIR DISTRIBUTION (DIVIDER PROVIDED BY RAISED FLOOR VENDOR).
2. PROVIDE FSD AT STRUCTURAL FLOOR PENETRATION.
3. HWS & HWR BELOW RAISED FLOOR.
4. FMCS PANEL: 28"Wx30"Hx8"DEEP.
5. 1/2" HWS FB & HWR DN. SEE M242 FOR CONTINUATION.
6. TERMINATE DUCT AT RAISED FLOOR WITH WMS IN FLOOR OPENING FOR DISCHARGE TO UNDER FLOOR PLENUM.

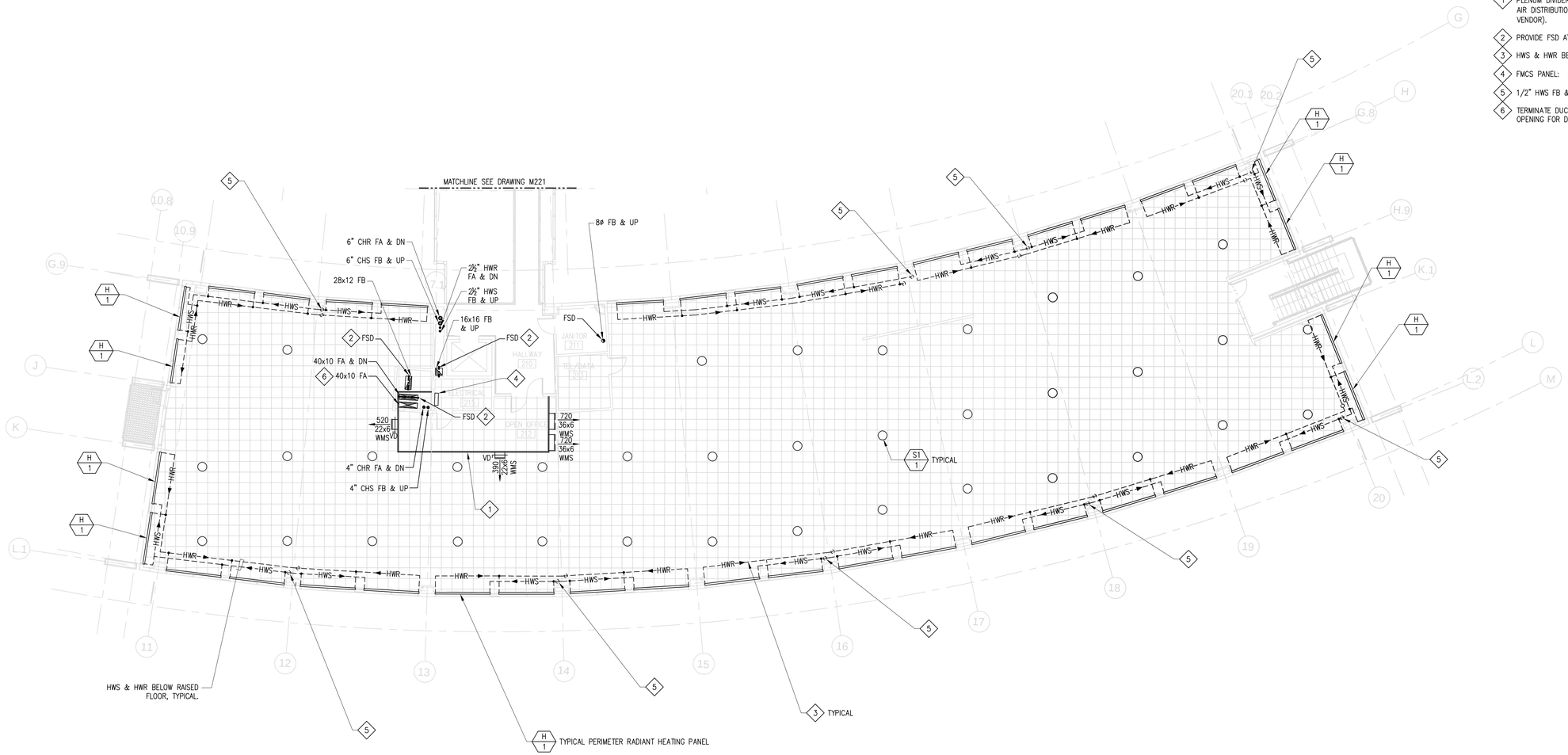

PROJECT STATUS

BID SET 04/30/09

ISSUE			
MARK	DATE	DESCRIPTION	INITIAL

KEY PLAN

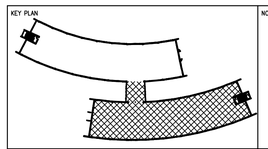

NORTH ARROW

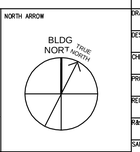

3/32"=1' 0 6 12 24 32

		DATE
DRAWN	J HO	
DESIGNED	M CALLAHAN	
CHECKED	S PAINTER	
PROJMGR	J GRANT	
REQUESTOR	R SCHULER	
R&QA		
SAFETY		
SUPERVISOR	S FRANKEL	

Ames Research Center
Moffet Field, California

N232 COLLABORATIVE SUPPORT FACILITY

LOW LEVEL MECHANICAL
PARTIAL SECOND FLOOR PLAN
SOUTH WING

SIZE	CAGE CODE		REV
D	25307	A232-0800- M222	
SCALE 3/32" = 1'-0"	INDEX	SHEET OF	

DWG: R:\232\N232 Collaborative Support Facility\500_CAD\CAD\Drawings\M222.dwg User: jjho
DATE: Apr 30, 2009 - 11:53:2 pm
Xrefs: AMFP02 7NEBR-SHORT AMFP02 images:

SHEET NOTES

1. SEE SHEET M601 FOR EQUIPMENT SCHEDULES

KEY NOTES

1. FRESH OUTSIDE AIR INTAKE HOOD
2. PROVIDE TRANSITION AND ADAPTOR FROM DUCT SIZE TO UNIT CONNECTION SIZE. LOCATE TRANSITION INSIDE ROOF CURB BETWEEN ROOF SUPPORT SLAB AND UNIT BASE. PROVIDE FLEXIBLE CONNECTION AT UNIT CONNECTION.

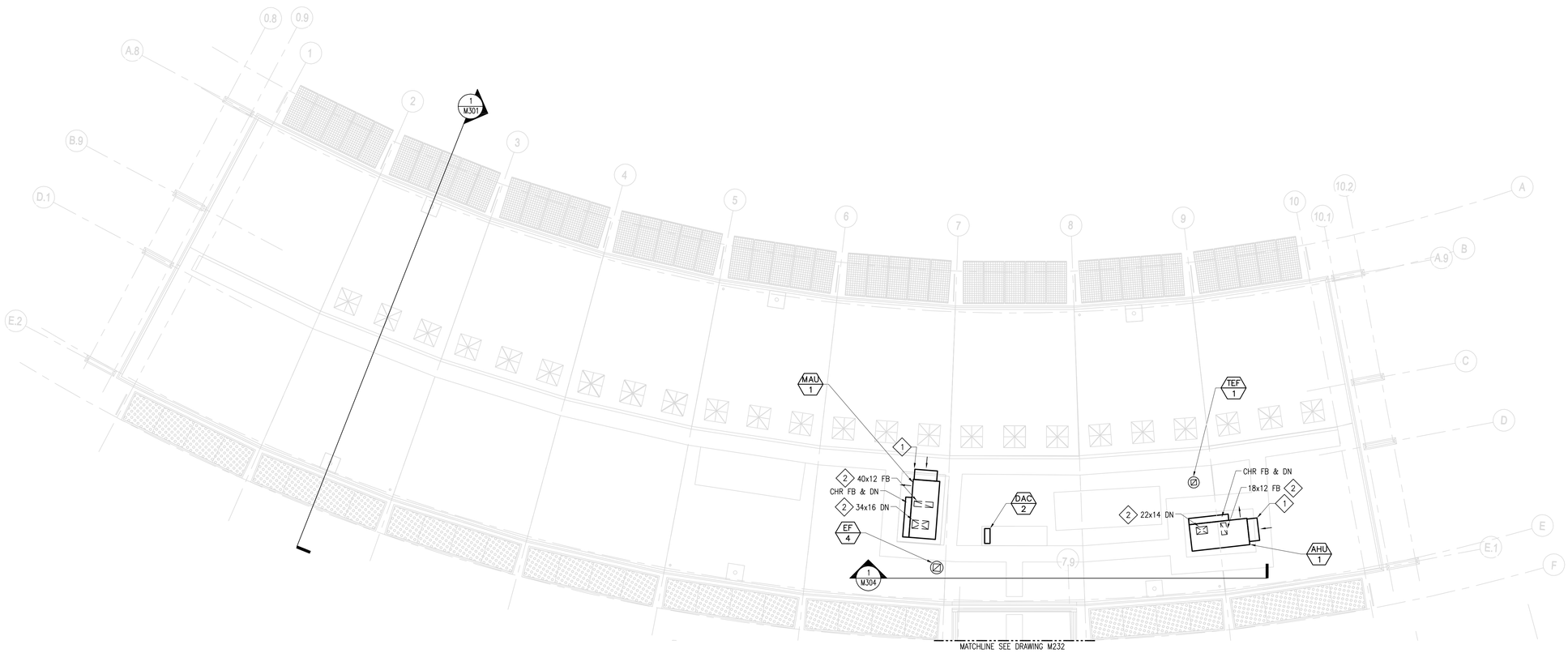

KEY PLAN

NORTH ARROW

BLDG NORTH

TRUE NORTH

3/32"=1'

0 6 12 24 32

PROJECT STATUS

BID SET 04/30/09

ISSUE

MARK	DATE	DESCRIPTION	INITIAL

		DATE
DRAWN	J HO	
DESIGNED	M CALLAHAN	
CHECKED	S PAINTER	
PROJMGR	J GRANT	
REQUESTOR	R SCHULER	
R&QA		
SAFETY		
SUPERVISOR	S FRANKEL	

Ames Research Center
Moffet Field, California

N232 COLLABORATIVE SUPPORT FACILITY

MECHANICAL
PARTIAL ROOF PLAN
–NORTH WING

SIZE	CAGE CODE		REV
D	25307	A232-0800- M231	
SCALE 3/32" = 1'-0"		INDEX	SHEET OF

DWG: R:\A232\W232_Collaborative Support Facility\500_CAD\CAD\Drawings\M231.dwg User: jlho
DATE: Apr 30, 2009 - 11:51 5 pm Progress
Xrefs: "AMFP01" "XBGR-SHORT" "AMFP02" "AMFG01"

SHEET NOTES

1. SEE SHEET M601 FOR EQUIPMENT SCHEDULES

KEY NOTES

1. FRESH OUTSIDE AIR INTAKE HOOD.
2. ELEVATOR HOISTWAY VENT: HOODED GRAVITY VENT WITH 24"x18" (3.0 SQ.FT. MIN.) THROAT, ALUMINUM BIRDSCREEN, ROOF CURB MOUNT. GREENHECK FHR, OR APPROVED EQUAL.
3. PROVIDE TRANSITION AND ADAPTOR FROM DUCT SIZE TO UNIT CONNECTION SIZE. LOCATE TRANSITION INSIDE ROOF CURB BETWEEN ROOF SUPPORT SLAB AND UNIT BASE. PROVIDE FLEXIBLE CONNECTION AT UNIT CONNECTION.
4. ELECTRICAL ROOM 215 VENT: HOOD GRAVITY VENT WITH 12"x12", ALUMINUM BIRDSCEEN, ROOF CURB MOUNT. GREENHECK FNR, OR APPROVED EQUAL.

KEY PLAN

NORTH ARROW

BLDG NORTH

TRUE NORTH

3/32"=1' 0 6 12 24 32

PROJECT STATUS

BID SET 04/30/09

ISSUE			
MARK	DATE	DESCRIPTION	INITIAL

DRAWN	J HO	DATE
DESIGNED	M CALLAHAN	DATE
CHECKED	S PAINTER	DATE
PROJMGR	J GRANT	DATE
REQUESTOR	R SCHULER	DATE
R&QA		DATE
SAFETY		DATE
SUPERVISOR	S FRANKEL	DATE

Ames Research Center
Moffet Field, California

N232 COLLABORATIVE SUPPORT FACILITY

MECHANICAL PARTIAL ROOF PLAN –SOUTH WING

SIZE	CAGE CODE		REV
D	25307	A232-0800- M232	
SCALE 3/32" = 1'-0"	INDEX	SHEET OF	

DWG: R:\232\N232 Collaborative Support Facility\500_CAD\CAD\Drawings\M232.dwg User: jjho
DATE: Apr 30, 2009 - 14:54 pmrr Images:
Xrefs: "KMFP01" "RBBR-SHORT" "KMFP02"

SHEET NOTES

1. SEE SHEET M601 FOR EQUIPMENT SCHEDULES

KEY NOTES

1. PROVIDE FSD AT STRUCTURAL FLOOR PENETRATION.
2. INSTALL PUMP RSP-3, PIPING AND VALVES FOR LOBBY RADIANT HEATING AND COOLING SYSTEM. SEE PIPING DIAGRAM M110 FOR DETAIL.
3. SHELL BUILDING FOR FUTURE CONFERENCE CENTER TENANT IMPROVEMENT.
4. CHS & CHR SOV FOR FUTURE CONNECTION TO TENANT LOADS (8 GPM).
5. SEE REFERENCED DETAIL FOR TYPICAL BAY ZONING, WHICH INCLUDES NORTH ZONE, INTERIOR ZONE, AND SOUTH ZONE. ZONING AND PIPING DETAIL ALSO APPLIES TO SIMILAR BAYS AND HALF BAYS, UNLESS OTHERWISE NOTED.
6. THIS PANEL IS ONE COMPLETE ZONE. PROVIDE ZONE CONTROLS, AND PIPE AS A SEPARATE ZONE.
7. EXTEND CHS & CHR TO CONNECT TO LAST ZONE PIPING.
8. EXTEND EXHAUST DUCT THROUGH WALL OF COPY ROOM. SEAL DUCT PENETRATION. SEE G101 FOR FUTURE TENANT COPY ROOM LOCATION.
9. MOUNT UNIT WITH TOP AT 6" BELOW CEILING PANEL. ATTACH MOUNTING BRACKET TO BLOCKING BETWEEN WALL STUDS. SEE DETAIL 7/S009.

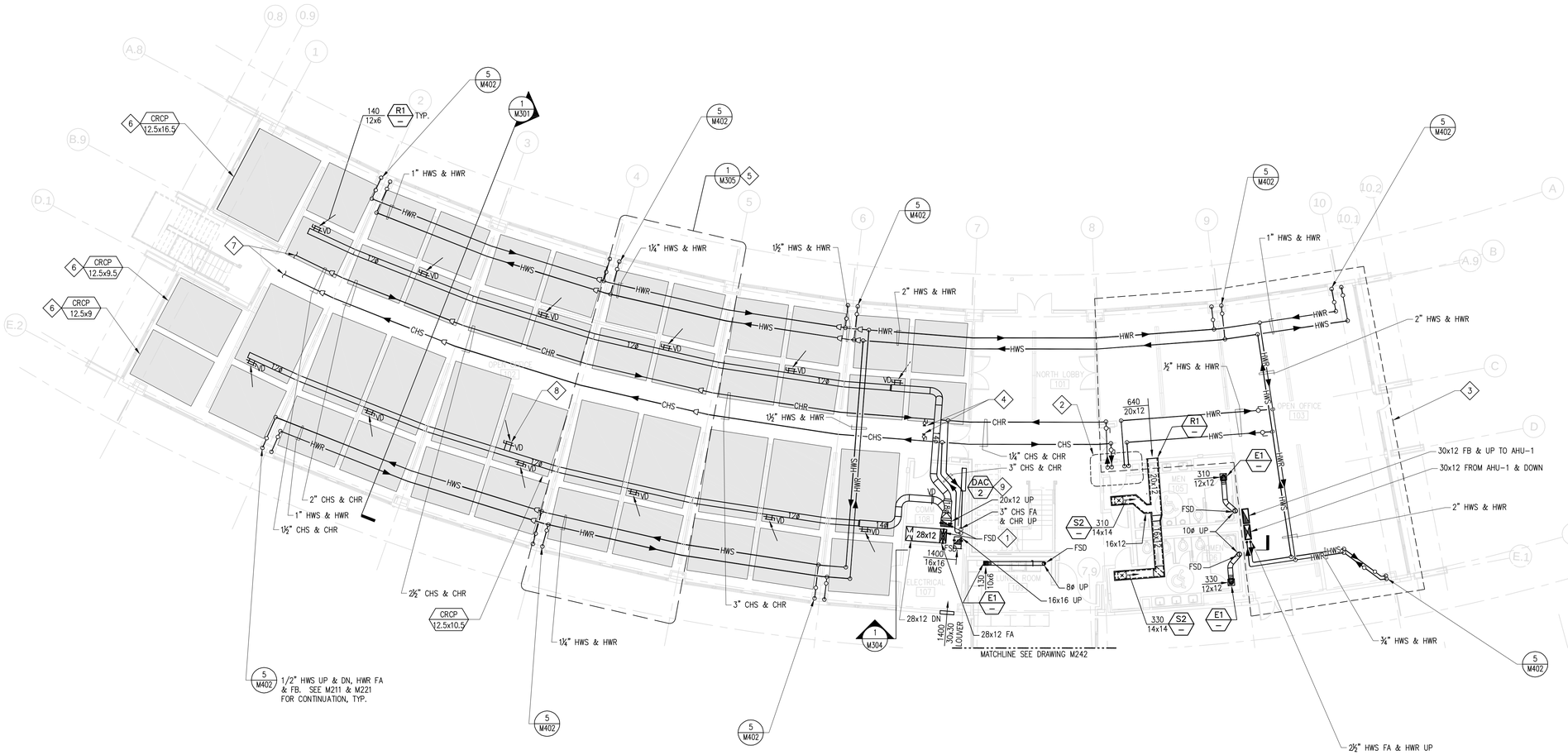

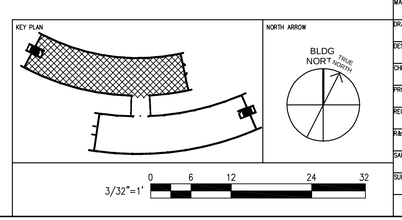

PROJECT STATUS

BID SET 04/30/09

ISSUE			
MARK	DATE	DESCRIPTION	INITIAL

DRAWN	J HO	DATE
DESIGNED	M CALLAHAN	DATE
CHECKED	S PAINTER	DATE
PROJMGR	J GRANT	DATE
REQUESTOR	R SCHULER	DATE
R&QA		DATE
SAFETY		DATE
SUPERVISOR	S FRANKEL	DATE

Ames Research Center
Moffet Field, California

N232 COLLABORATIVE SUPPORT FACILITY

HIGH LEVEL MECHANICAL PARTIAL FIRST FLOOR PLAN NORTH WING

SIZE	CAGE CODE		REV
D	25307	A232-0800- M241	
SCALE 3/32" = 1'-0"	INDEX	SHEET OF	

DWG: R:\232\N232_Collaborative Support Facility\500_CAD\CAD\Drawings\M241.dwg User: jjho
DATE: Apr 30, 2009 - 1:43:34 pm Images:
Xrefs: "AXF001" "ARC01" "RBDR-SHORT" "AXF001" "AXF001-SPACEPLAN-N232_509_CENTRAL-rvt-1-Level1Export

SHEET NOTES

1. SEE SHEET M601 FOR EQUIPMENT SCHEDULES

KEY NOTES

1. CHS & CHR SOV FOR FUTURE CONNECTION TO TENANT LOADS (8 GPM).
2. SEE REFERENCED DETAIL FOR TYPICAL BAY ZONING, WHICH INCLUDES NORTH ZONE, INTERIOR ZONE, AND SOUTH ZONE. ZONING AND PIPING DETAIL ALSO APPLIES TO SIMILAR BAYS AND HALF BAYS, UNLESS OTHERWISE NOTED.
3. THIS PANEL IS ONE COMPLETE ZONE. PROVIDE ZONE CONTROLS, AND PIPE AS A SEPARATE ZONE.
4. EXTEND CHS & CHR TO CONNECT TO LAST ZONE PIPING.
5. EXTEND EXHAUST DUCT THROUGH WALL OF COPY ROOM. SEAL DUCT PENETRATION. SEE G101 FOR FUTURE TENANT COPY ROOM LOCATION.
6. MOUNT UNIT WITH TOP AT 6" BELOW 2ND FLOOR DECK. ATTACH MOUNTIN BRACKET TO BLOCKING BETWEEN WALL STUDS. SEE DETAIL 7/S009.

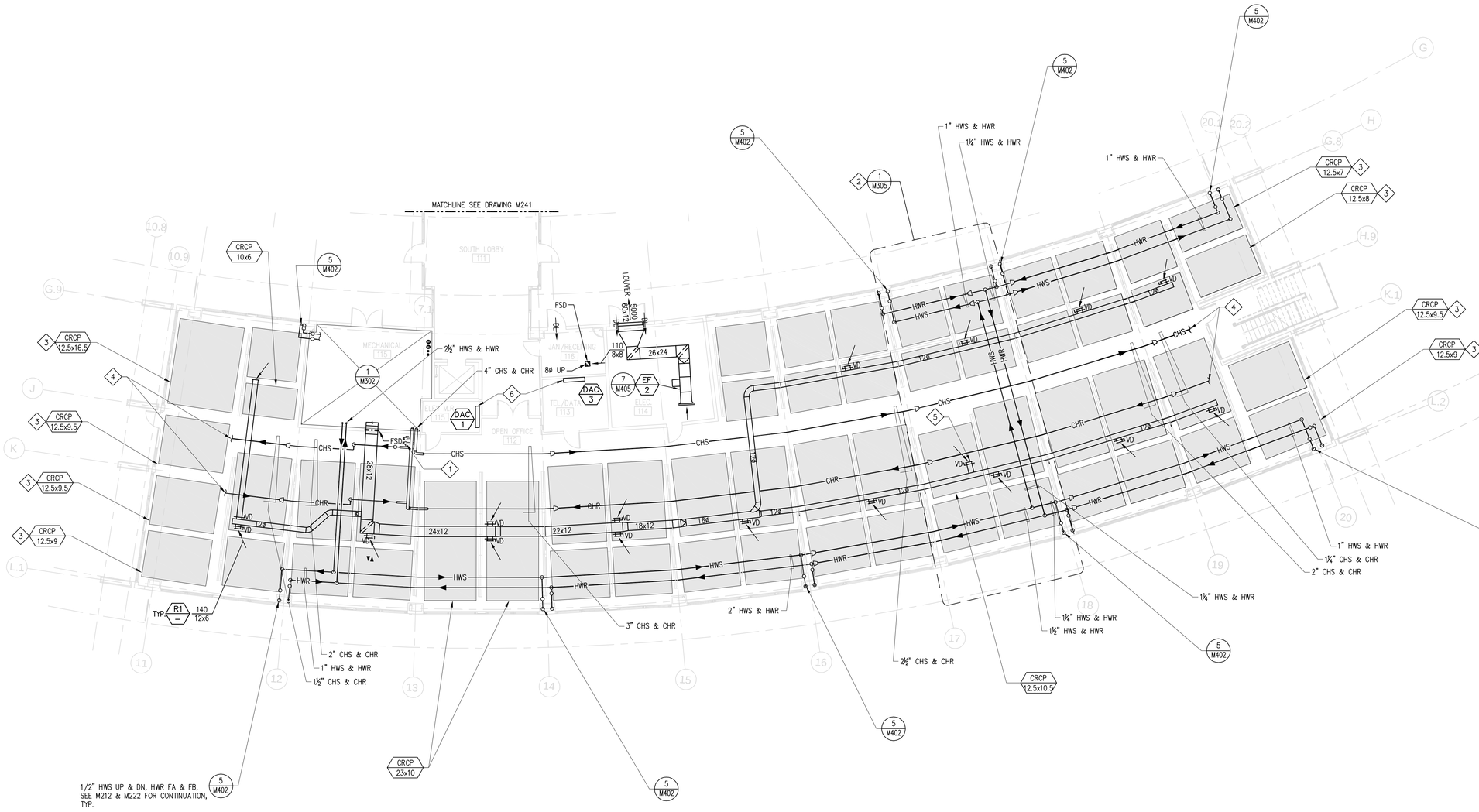

PROJECT STATUS

BID SET 04/30/09

ISSUE			
MARK	DATE	DESCRIPTION	INITIAL

KEY PLAN

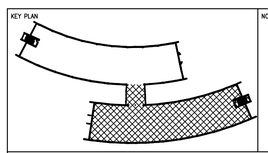

NORTH ARROW

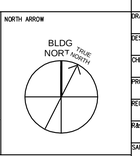

3/32"=1' 0 6 12 24 32

DRAWN	J HO	DATE
DESIGNED	M CALLAHAN	DATE
CHECKED	S PAINTER	DATE
PROJMGR	J GRANT	DATE
REQUESTOR	R SCHULER	DATE
R&QA		DATE
SAFETY		DATE
SUPERVISOR	S FRANKEL	DATE

Ames Research Center
Moffet Field, California

N232 COLLABORATIVE SUPPORT FACILITY
HIGH LEVEL MECHANICAL
PARTIAL FIRST FLOOR PLAN
SOUTH WING

SIZE	CAGE CODE		REV
D	25307	A232-0800- M242	
SCALE 3/32" = 1'-0"	INDEX	SHEET OF	

DWG: R:\232\W232 Collaborative Support Facility\500_CAD\CAD\Drawings\M242.dwg User: jjho
DATE: Apr 30, 2009 - 11:46 am
Xrefs: "xAFP01" "xARC01" "XBDR-SHORT" "xMFP01" "xAFP01-SPACEPLAN-N232_S09_CENTRAL-rvt-1-Level1Export

SHEET NOTES

1. SEE SHEET M601 FOR EQUIPMENT SCHEDULES

KEY NOTES

1. CONNECT TO ROOF TOP UNIT WITH TRANSITION TO UNIT CONNECTION SIZE.
2. CHS & CHR SOV FOR FUTURE CONNECTION TO TENANT LOADS (8 GPM).
3. SEE REFERENCED DETAIL FOR TYPICAL BAY ZONING, WHICH INCLUDES NORTH ZONE, INTERIOR ZONE, AND SOUTH ZONE. ZONING AND PIPING DETAIL ALSO APPLIES TO SIMILAR BAYS AND HALF BAYS, UNLESS OTHERWISE NOTED.
4. THIS PANEL IS ONE COMPLETE ZONE. PROVIDE ZONE CONTROLS, AND PIPE AS A SEPARATE ZONE.
5. EXTEND CHS & CHR TO CONNECT TO LAST ZONE PIPING.
6. SEISMIC PIPE JOINT: DOUBLE FLEXIBLE ASSEMBLY WITH U-BEND AND FLANGE CONNECTION, MINIMUM 4" ALLOWABLE MOVEMENT IN ALL DIRECTIONS, METRAFLEX METRALOOP, OR APPROVED EQUAL.
7. EXTEND EXHAUST DUCT THROUGH WALL OF COPY ROOM. SEAL DUCT PENETRATION. SEE G102 FOR FUTURE TENANT COPY ROOM LOCATION.

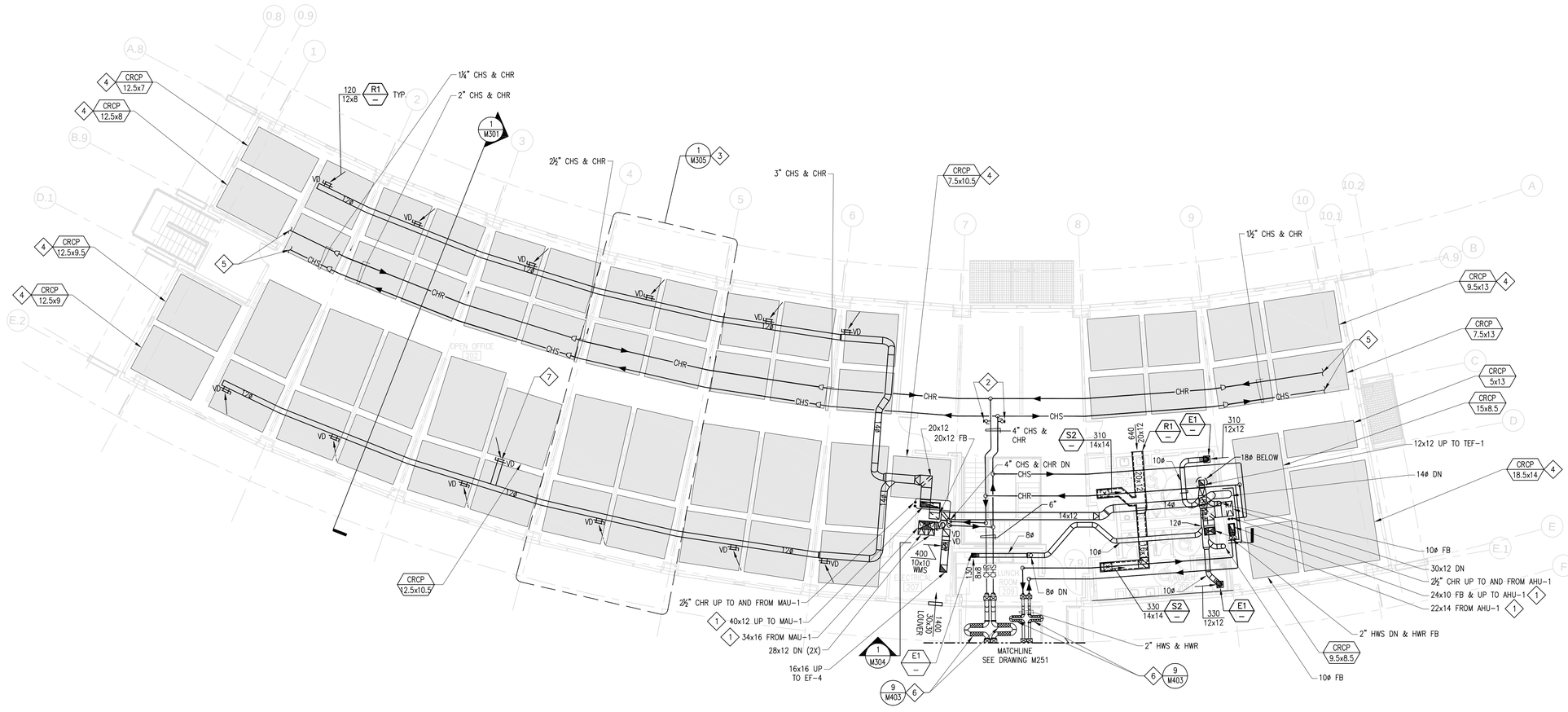

PROJECT STATUS

BID SET 04/30/09

ISSUE			
MARK	DATE	DESCRIPTION	INITIAL

KEY PLAN

NORTH ARROW

BLDG NORTH TRUE NORTH

3/32"=1' 0 6 12 24 32

DRAWN	J HO	DATE
DESIGNED	M CALLAHAN	DATE
CHECKED	S PAINTER	DATE
PROJMGR	J GRANT	DATE
REQUESTOR	R SCHULER	DATE
R&QA		DATE
SAFETY		DATE
SUPERVISOR	S FRANKEL	DATE

Ames Research Center
Moffet Field, California

N232 COLLABORATIVE SUPPORT FACILITY

HIGH LEVEL MECHANICAL PARTIAL SECOND FLOOR PLAN NORTH WING

SIZE	CAGE CODE		REV
D	25307	A232-0800- M251	
SCALE 3/32" = 1'-0"	INDEX	SHEET OF	

DWG: R:\232\N232 Collaborative Support Facility\500_CAD\CAD\Drawings\M251.dwg User: jlho
DATE: Apr 30, 2009 - 11:33 am
Xrefs: XAFP02, XEBR-SHORT, XMFP02

SHEET NOTES

1. SEE SHEET M601 FOR EQUIPMENT SCHEDULES

KEY NOTES

1. 12x12 DUCT DOWN FROM FRESH AIR INTAKE HOOD ON ROOF. EXTEND DUCT DOWN TO 12" AFF, AND TERMINATE WITH WMS.
2. SEISMIC PIPE JOINT: DOUBLE FLEXIBLE ASSEMBLY WITH U-BEND AND FLANGE CONNECTION, MINIMUM 4" ALLOWABLE MOVEMENT IN ALL DIRECTIONS, METRAFLEX METRALOOP, OR APPROVED EQUAL.
3. CONNECT DUCT TO ROOFTOP UNIT WITH TRANSITION TO UNIT CONNECTION SIZE.
4. CHS & CHR SOV FOR FUTURE CONNECTION TO TENANT LOADS (8 GPM).
5. SEE REFERENCED DETAIL FOR TYPICAL BAY ZONING, WHICH INCLUDES NORTH ZONE, INTERIOR ZONE, AND SOUTH ZONE. ZONING AND PIPING DETAIL ALSO APPLIES TO SIMILAR BAYS AND HALF BAYS, UNLESS OTHERWISE NOTED.
6. THIS PANEL IS ONE COMPLETE ZONE. PROVIDE ZONE CONTROLS, AND PIPE AS A SEPARATE ZONE.
7. EXTEND CHS & CHR TO CONNECT TO LAST ZONE PIPING.
8. EXTEND EXHAUST DUCT THROUGH WALL OF COPY ROOM. SEAL DUCT PENETRATION. SEE G102 FOR FUTURE TENANT COPY ROOM LOCATION.

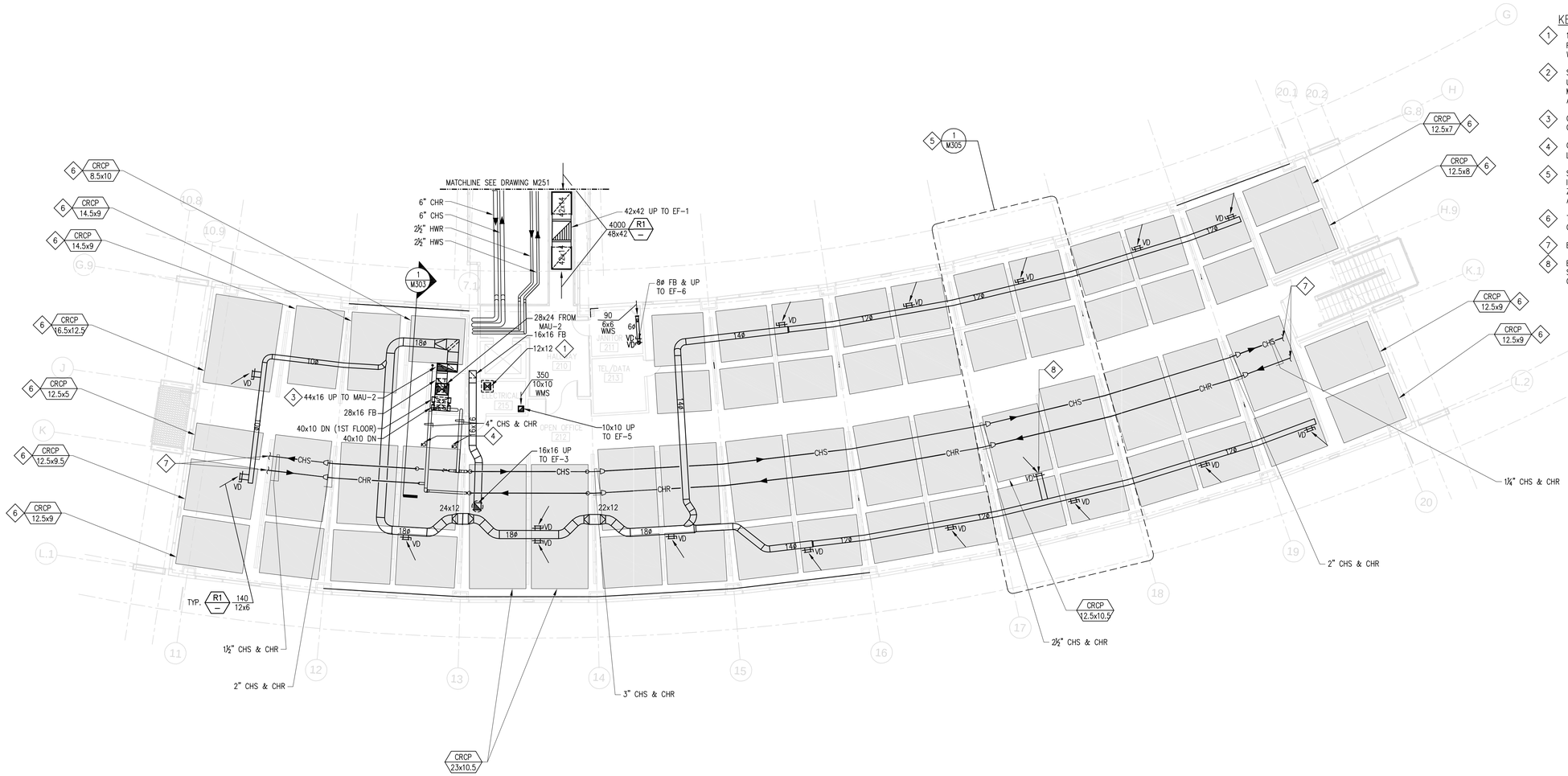

PROJECT STATUS

BID SET 04/30/09

ISSUE			
MARK	DATE	DESCRIPTION	INITIAL

KEY PLAN

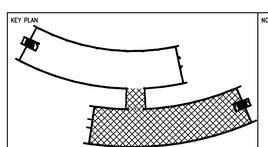

NORTH ARROW

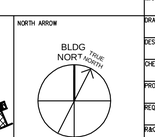

3/32"=1' 0 6 12 24 32

DRAWN	J HO	DATE
DESIGNED	M CALLAHAN	DATE
CHECKED	S PAINTER	DATE
PROJMGR	J GRANT	DATE
REQUESTOR	R SCHULER	DATE
R&QA		DATE
SAFETY		DATE
SUPERVISOR	S FRANKEL	DATE

Ames Research Center
Moffet Field, California

N232 COLLABORATIVE SUPPORT FACILITY

HIGH LEVEL MECHANICAL PARTIAL SECOND FLOOR PLAN SOUTH WING

SIZE	CAGE CODE		REV
D	25307	A232-0800- M252	
SCALE 3/32" = 1'-0"	INDEX	SHEET OF	

DWG: R:\232\W232 Collaborative Support Facility\500_CAD\CAD\Drawings\M252.dwg User: jjho
DATE: Apr 30, 2009 - 12:16 pm Images:
Xrefs: XAFP02" "RGBR-SNORT" "XMFP02

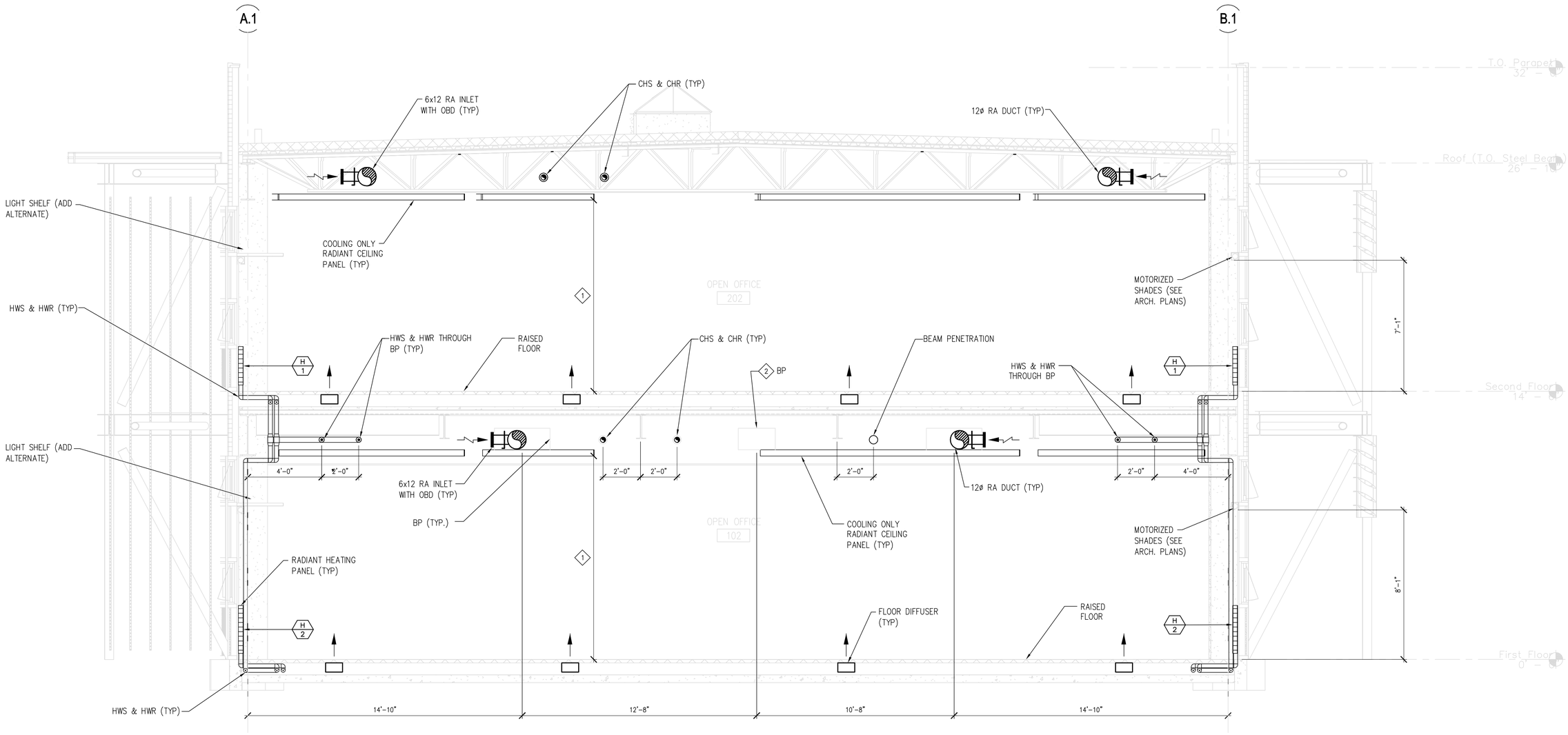

KEY NOTES

1. REFER TO DWG A312 FOR CEILING PANEL HEIGHT.
2. BEAM PENETRATION DESIGNATED FOR ELECTRICAL, AND FIRE ALARM USE.

3/8"=1' 0 1 2 4 6 8

PROJECT STATUS

BID SET 04/30/09

ISSUE			
MARK	DATE	DESCRIPTION	INITIAL

DRAWN	J HO	DATE
DESIGNED	M CALLAHAN	DATE
CHECKED	S PAINTER	DATE
PROJMGR	J GRANT	DATE
REQUESTOR	R SCHULER	DATE
R&QA		DATE
SAFETY		DATE
SUPERVISOR	S FRANKEL	DATE

Ames Research Center
Moffet Field, California

N232 COLLABORATIVE SUPPORT FACILITY
MECHANICAL
SECTIONS

SIZE	CAGE CODE			REV
D	25307	A232-0800-	M301	
SCALE 3/8" = 1'-0"	INDEX		SHEET OF	

DWG: R:\232\N232 Collaborative Support Facility\500_CAD\Drawings\M301.dwg User: jjho
DATE: Apr 30, 2009 - 12:46 pm Images:
Xrefs: XA5S01 * 7680R- SHORT

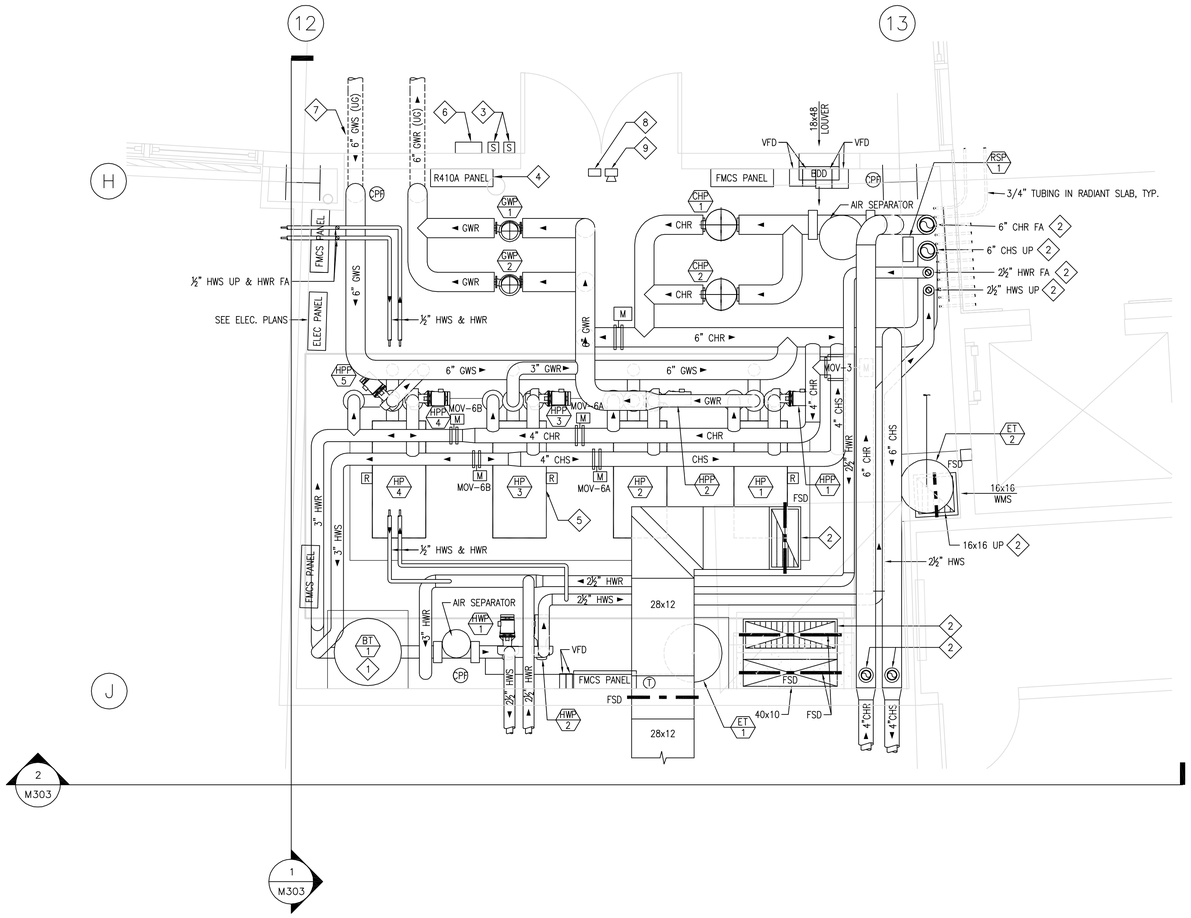

KEY NOTES

1. BUFFER TANK: 140 GAL. INSULATED, WATER STORAGE TANK, A.O. SMITH TJV-140, OR APPROVED EQUAL.
2. PIPES AND DUCTS UP INTO SECOND FLOOR CHASE.
3. EMERGENCY VENTILATION SWITCH AND KEY SWITCH.
4. REFRIGERANT MONITORING PANEL.
5. MOUNT REFRIGERANT SENSORS ON HOUSEKEEPING PAD, TYPICAL OF 3.
6. FAN INDICATOR LAMPS, AND PRESSURE DIFFERENTIAL TRANSDUCER.
7. UNDERGROUND PIPING. SEE 3/S005.
8. LEAK DETECTION VISUAL ALARM ABOVE DOOR.
9. LEAK DECTION AUDIBLE ALARM ABOVE DOOR.

PROJECT STATUS

BID SET 04/30/09

ISSUE

MARK	DATE	DESCRIPTION	INITIAL

KEY PLAN

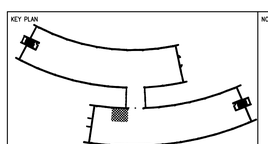

NORTH ARROW

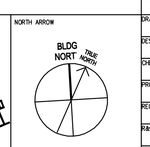

3/8"=1' 0 1 2 4 6 8

		DATE
DRAWN	M CALLAHAN	
DESIGNED	M CALLAHAN	
CHECKED	S PAINTER	
PROJMGR	J GRANT	
REQUESTOR	R SCHULER	
R&QA		
SAFETY		
SUPERVISOR	S FRANKEL	

Ames Research Center
Moffet Field, California

N232 COLLABORATIVE SUPPORT FACILITY

PARTIAL PLAN – MECHANICAL EQUIPMENT ROOM

SIZE	CAGE CODE		REV
D	25307	A232-0800- M302	

SCALE 3/8" = 1'-0" INDEX SHEET OF

DWG: R:\232\N232 Collaborative Support Facility\500_CAD\CAD\Drawings\M302.dwg User: jjho
DATE: Apr 30, 2009 - 12:21:00 pm Images:
Xrefs: RBDR-SHORT "xMFP01_MC" "xMFP01" "xMFP01"

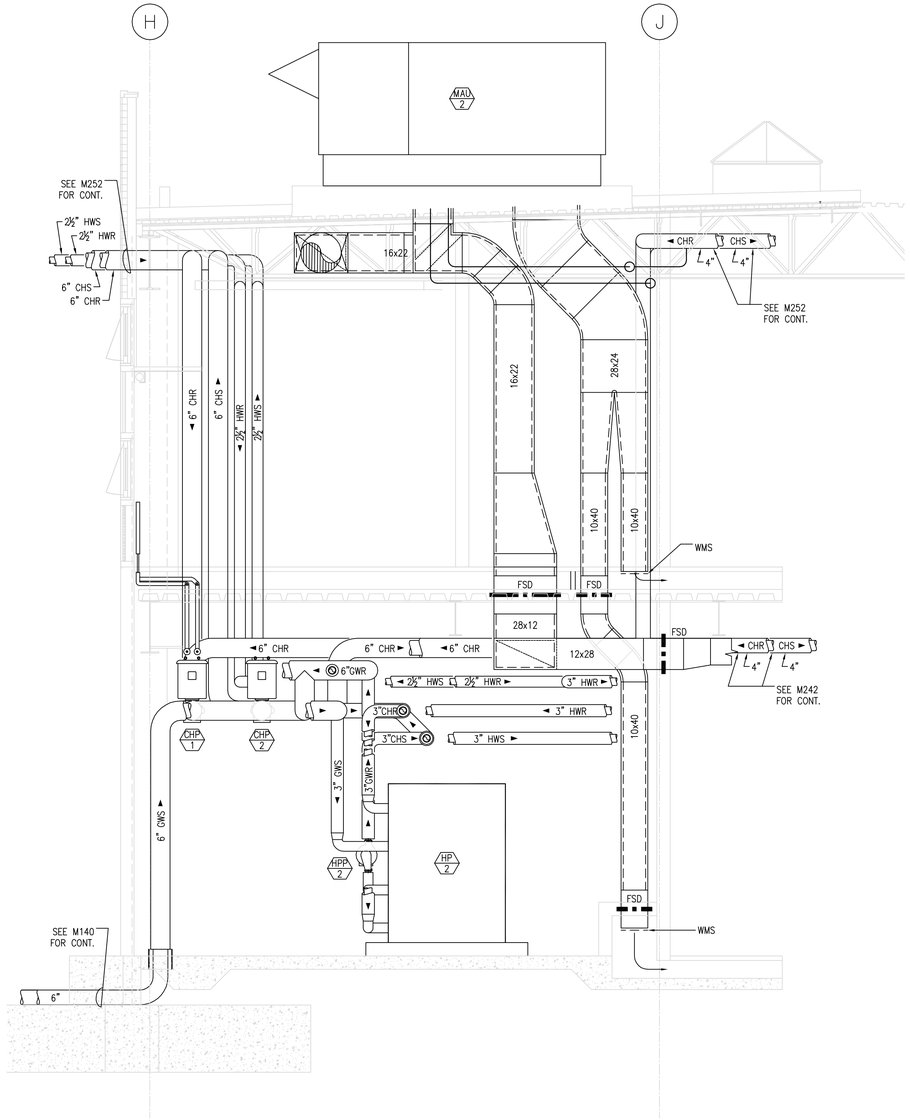

1 SECTION – MECHANICAL EQUIPMENT ROOM

M303 REF. NONE SCALE: 3/8" = 1'-0"

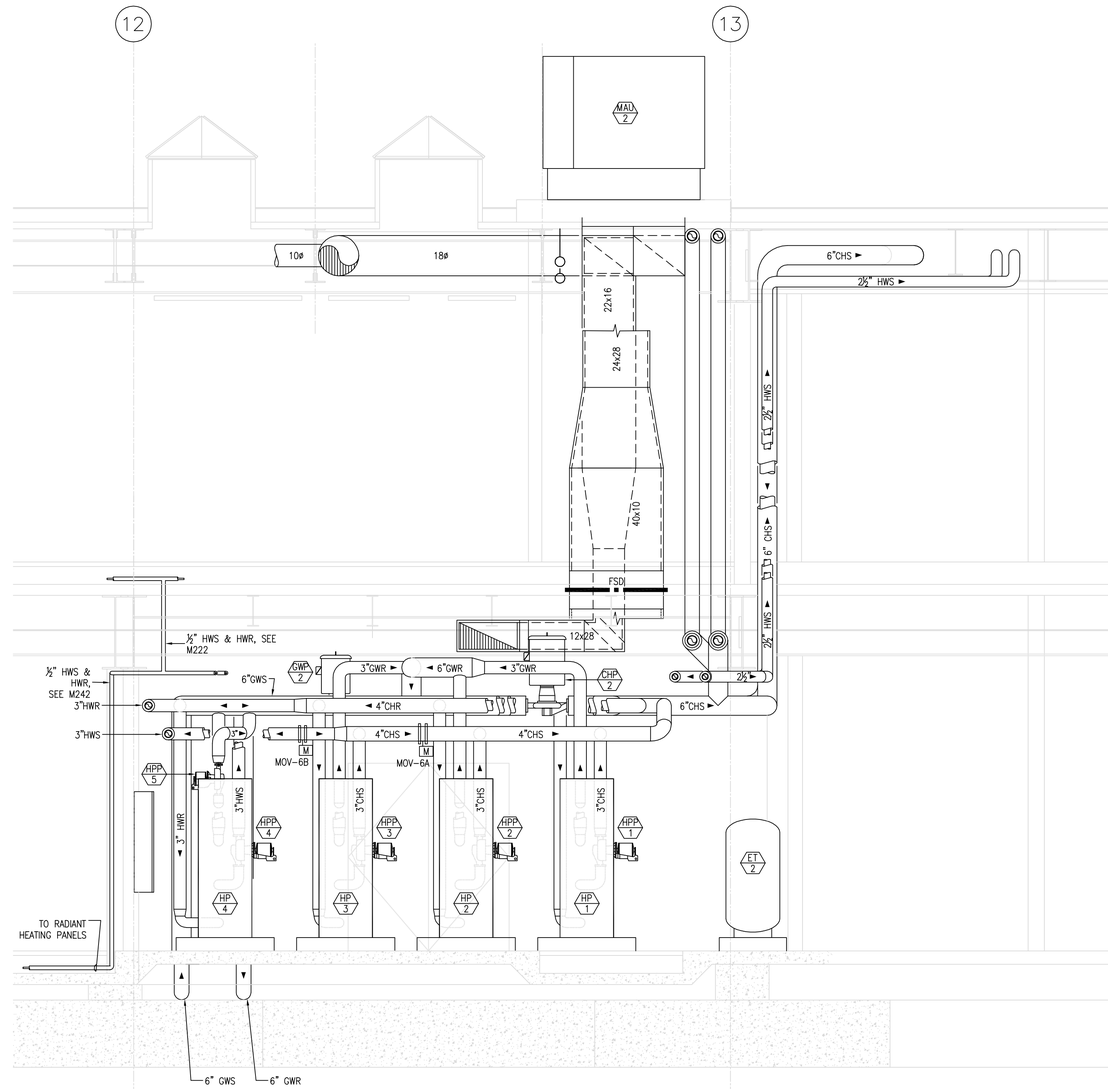

2 SECTION – MECHANICAL EQUIPMENT ROOM

M303 REF. NONE SCALE: 3/8" = 1'-0"

3/8"=1' 0 1 2 4 6 8

PROJECT STATUS

BID SET 04/30/09

ISSUE

MARK	DATE	DESCRIPTION	INITIAL

		DATE
DRAWN	M CALLAHAN	
DESIGNED	M CALLAHAN	
CHECKED	S PAINTER	
PROJMGR	J GRANT	
REQUESTOR	R SCHULER	
R&QA		
SAFETY		
SUPERVISOR	S FRANKEL	

Ames Research Center
Moffet Field, California

N232 COLLABORATIVE SUPPORT FACILITY
FIRST FLOOR MECHANICAL ROOM – SECTIONS

SIZE	CAGE CODE		REV
D	25307	A232-0800- M303	
SCALE		INDEX / SHEET OF	

DWG: R:\232\W232 Collaborative Support Facility\500_CAD\CAD\Drawings\M303.dwg User: jlho
DATE: Apr 30, 2009 - 2:23:17 pm Images:
Xrefs: "XBUR-SHORT" "xMIFT01" "xMIFT01_MC" "xMIFT01"

SHEET NOTES

1. SEE SHEET M601 FOR EQUIPMENT SCHEDULES

KEY NOTES

1. FUTURE TENANT CONNECTION

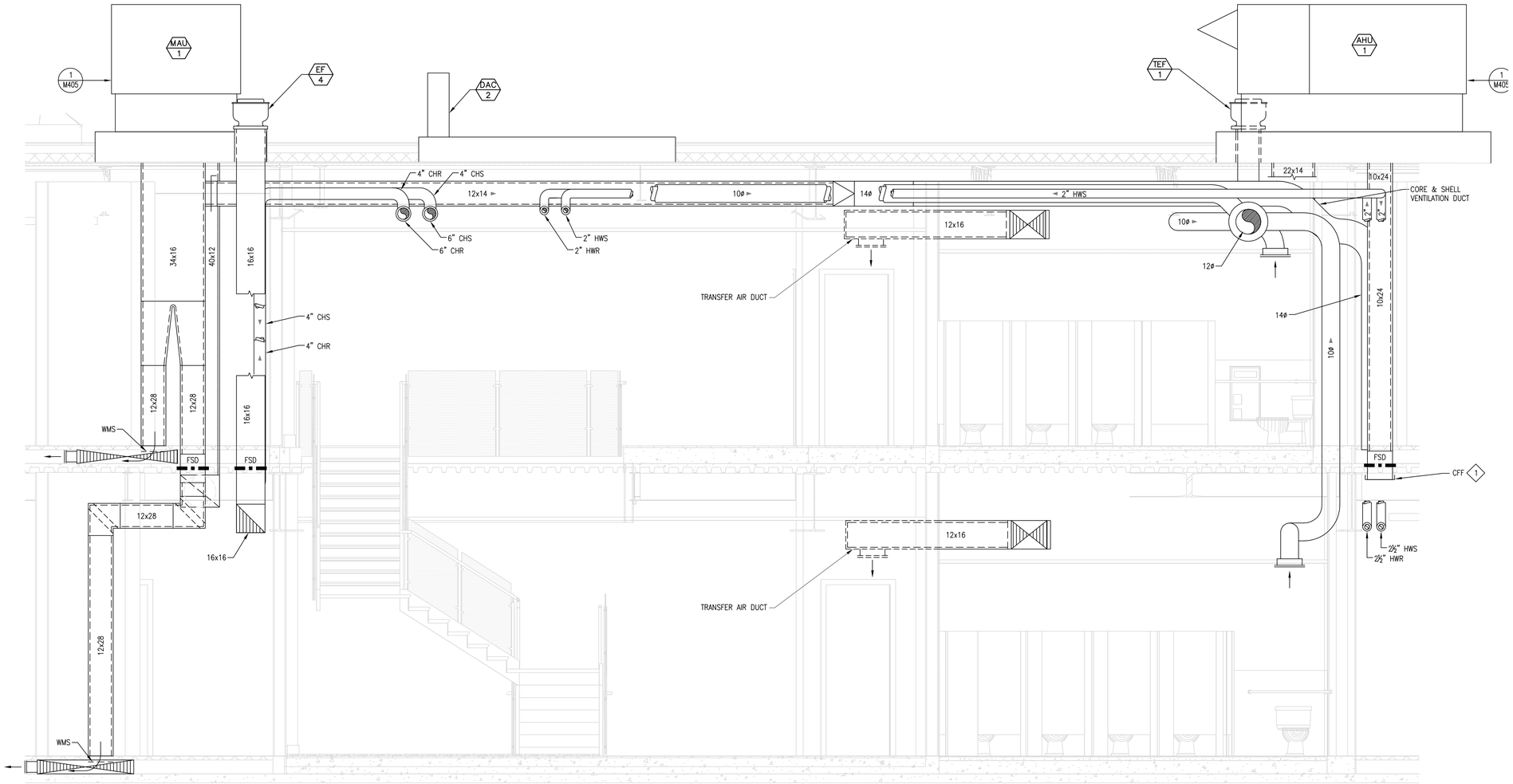

3/8"=1' 0 1 2 4 6 8

PROJECT STATUS

BID SET 04/30/09

ISSUE			
MARK	DATE	DESCRIPTION	INITIAL

DRAWN	J HO	DATE
DESIGNED	M CALLAHAN	DATE
CHECKED	S PAINTER	DATE
PROJMGR	J GRANT	DATE
REQUESTOR	R SCHULER	DATE
R&QA		DATE
SAFETY		DATE
SUPERVISOR	S FRANKEL	DATE

Ames Research Center
Moffet Field, California

N232 COLLABORATIVE SUPPORT FACILITY
MECHANICAL
SECTIONS

SIZE	CAGE CODE		REV
D	25307	A232-0800- M304	
SCALE 3/8" = 1'-0"	INDEX	SHEET OF	

DWG: R:\232\W232 Collaborative Support Facility\500_CAD\CAD\Drawings\M304.dwg User: jlho
DATE: Apr 30, 2009 - 12:22 pm Images:
Xrefs: "NEBR-SHORT" "xNB302"

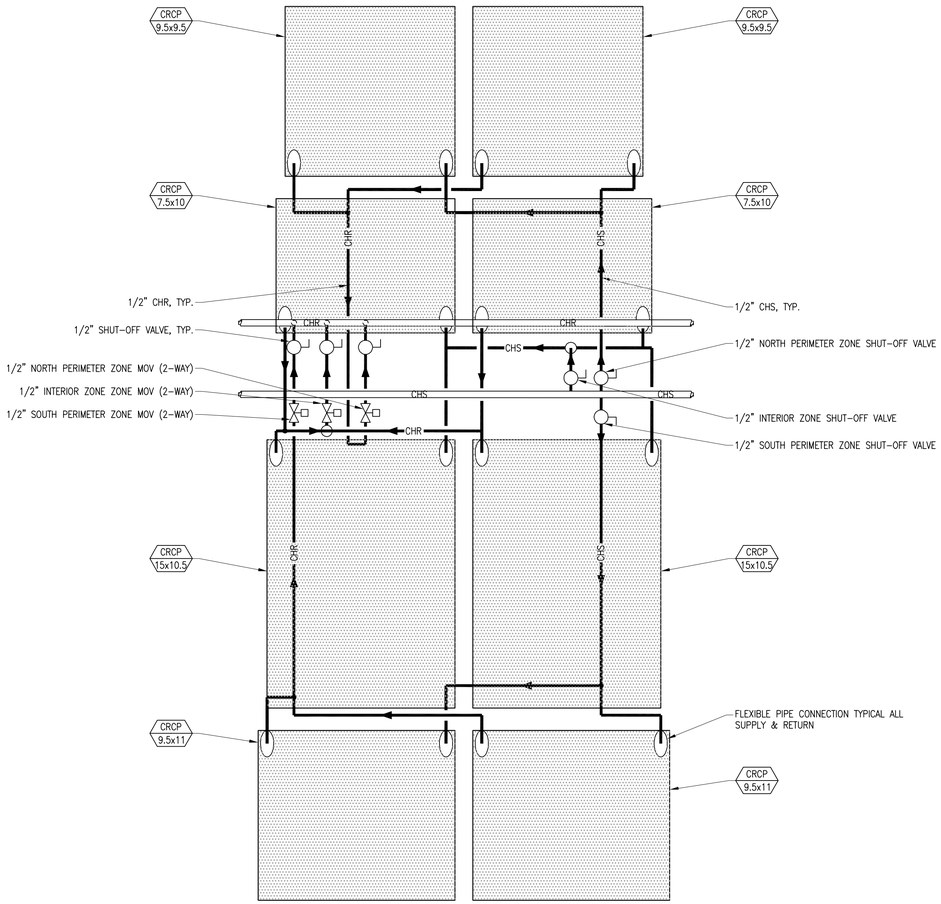

1/4"=1' 0 2 4 8 12

PROJECT STATUS	
BID SET 04/30/09	

ISSUE

MARK	DATE	DESCRIPTION	INITIAL

DRAWN	J HO	DATE
DESIGNED	M CALLAHAN	DATE
CHECKED	S PAINTER	DATE
PROJMGR	J GRANT	DATE
REQUESTOR	R SCHULER	DATE
R&QA		DATE
SAFETY		DATE
SUPERVISOR	S FRANKEL	DATE

Ames Research Center
Moffet Field, California

N232 COLLABORATIVE SUPPORT FACILITY
CEILING RADIANT COOLING PANEL PLAN (TYPICAL BAY)

SIZE	CAGE CODE		REV
D	25307	A232-0800- M305	
SCALE 1/4" = 1'-0"		INDEX	SHEET OF

DWG: R:\232\W232_Collaborative Support Facility\500_CAD\CAD\Drawings\M305.dwg User: jlho
DATE: Apr 30, 2009 - 2:22:52 pm Images:
Xrefs: "HBDR-SNGRT" "xMFP01" "xAFP01" "xMFP01-SPACEPLAN-N232_S09_CENTRAL-rvt-1-Level1Export

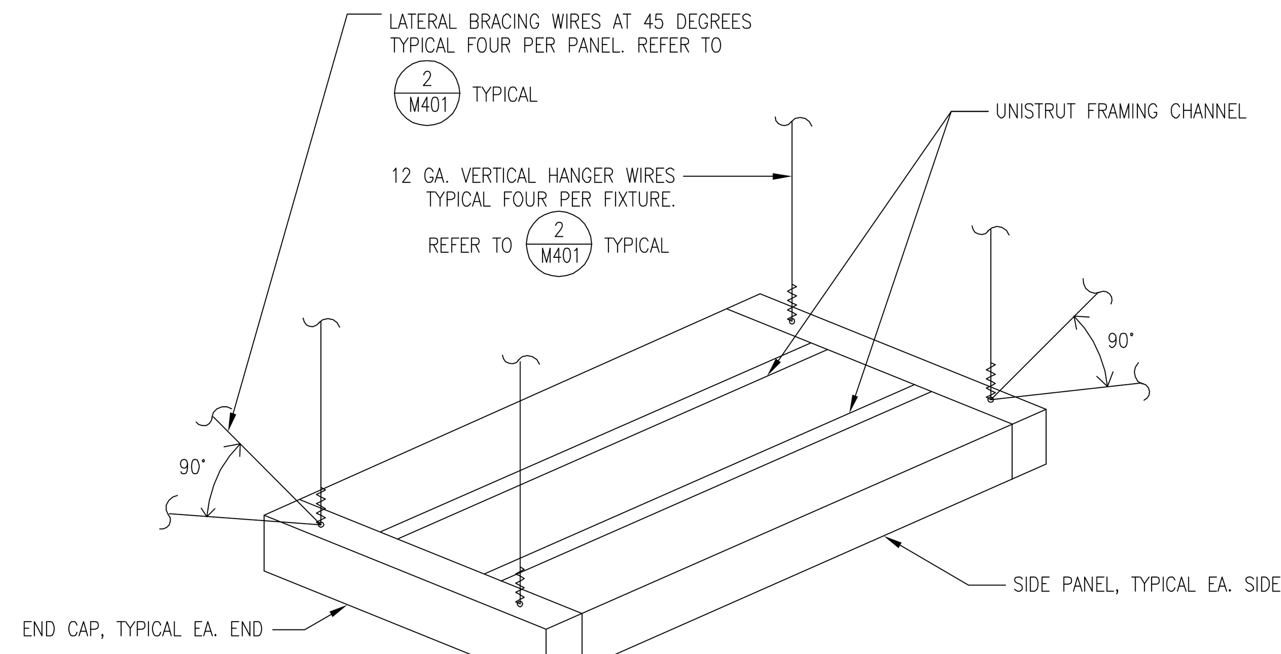

DETAIL NOTES:
1. WIRES TO BE GALVANIZED SOFT IRON WIRE 12 GA MINIMUM WITH FOUR FULL WRAPS WITHIN 1/8" OF TOP AND BOTTOM.
2. TIE WIRES TO TAB ON FIXTURE, TYPICAL FOUR PER FIXTURE.
3. PROVIDE TWO 12 GA. WIRES AT DIAGONAL CORNERS.

5 TYP. RADIANT COOLING PANEL BRACING DETAIL

M401 REF. NONE SCALE: NONE

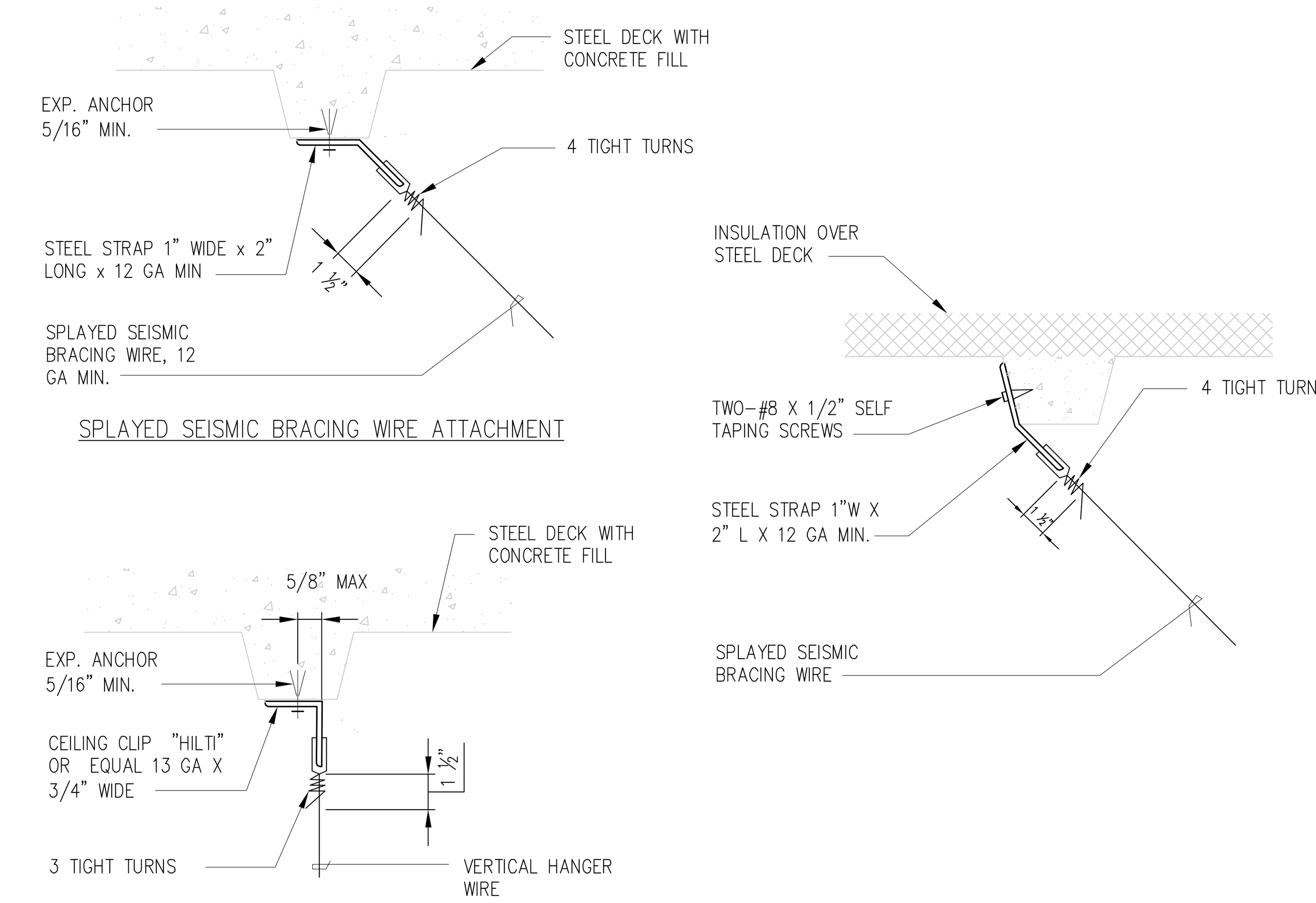

2 UPPER ATTACHMENT – WIRE HANGERS & BRACES

M401 REF. NONE SCALE: NONE

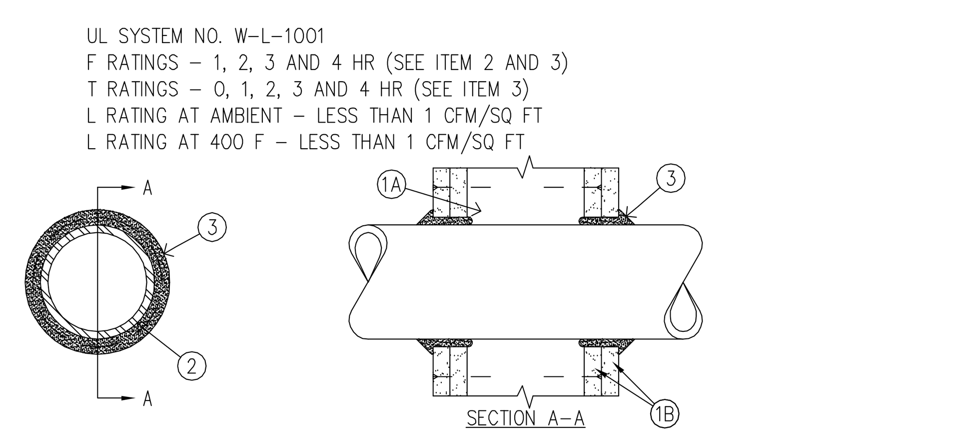

1. WALL ASSEMBLY – THE 1, 2, 3 OR 4 HR. FIRE-RATED GYPSUM WALLBOARD/STUD WALL ASSEMBLY SHALL BE CONSTRUCTED OF THE MATERIALS AND IN THE MANNER DESCRIBED IN THE INDIVIDUAL U300 OR U400 SERIES WALL OR PARTITION DESIGNS IN THE UL FIRE RESISTANCE DIRECTORY AND SHALL INCLUDE THE FOLLOWING CONSTRUCTION FEATURES:
   A. STUDS – WALL FRAMING MAY CONSIST OF EITHER WOOD STUDS (MAX 2 H FIRE RATED ASSEMBLIES) OR STEEL CHANNEL STUDS. WOOD STUDS TO CONSIST OF NOM 2 BY 4 IN. LUMBER SPACED 16 IN. OC WITH NOM 2 BY 4 IN. LUMBER END PLATES AND CROSS BRACES. STEEL STUDS TO BE MIN. 3-5/8 IN. WIDE BY 1-3/8" DEEP CHANNELS SPACED MAX 24 IN. OC.
   B. WALLBOARD, GYPSUM* – NOM 1/2 OR 5/8 IN. THICK, 4 FT. WIDE WITH SQUARE OR TAPERED EDGES. THE GYPSUM WALLBOARD TYPE, THICKNESS, NUMBER OF LAYERS, FASTENER TYPE AND SHEET ORIENTATION SHALL BE AS SPECIFIED IN THE INDIVIDUAL U300 OR U400 SERIES DESIGN IN THE UL FIRE RESISTANCE DIRECTORY. MAX DIAM OF OPENING IS 13.5 IN.
2. PIPE OR CONDUIT – NOM 12 IN. DIAM (OR SMALLER) SCHEDULE 10 (OR HEAVIER) STEEL PIPE, NOM 12 IN. DIAM (OR SMALLER) SERVICE WEIGHT (OR HEAVIER) CAST IRON SOIL PIPE, NOM 12 IN. DIAM (OR SMALLER) CLASS 50 (OR HEAVIER) DUCTILE IRON PRESSURE PIPE, NOM 6 IN. DIAM (OR SMALLER) STEEL CONDUIT, NOM 4 IN. DIAM (OR SMALLER) STEEL ELECTRICAL METALLIC TUBING, NOM 6 IN. DIAM (OR SMALLER) TYPE L (OR HEAVIER) COPPER TUBING OR NOM 1 IN. DIAM (OR SMALLER) FLEXIBLE STEEL CONDUIT. WHEN COPPER PIPE IS USED, MAX F RATING OF FIRE STOP SYSTEM (ITEM 3) IS 2 HR. STEEL PIPES OR CONDUITS LARGER THAN NOM 4 IN. MAY ONLY BE USED IN WALLS CONSTRUCTED USING STEEL CHANNEL STUDS. A MAX OF ONE PIPE OR CONDUIT IS PERMITTED IN THE FIRE STOP NSSYTEM. PIPE OR CONDUIT TO BE INSTALLED NEAR THE CENTER OF THE STUD CAVITY WIDTH AND TO BE RIGIDLY SUPPORTED ON BOTH SIDES OF THE WALLS.
3. FILL, VOID OR CAVITY MATERIAL BEARING THE UL CLASSIFICATION MARKING (CAULK) – CAULK FILL MATERIAL INSTALLED TO COMPLETELY FILL ANNULAR SPACE BETWEEN PIPE OR CONDUIT AND THE GYPSUM WALLBOARD AND WITH A MIN 1/4" IN. DIAM BEAD OF CAULK APPLIED TO PERIMETER OF PIPE OR CONDUIT AT IT'S EGRESS FROM THE WALL. CAULK INSTALLED SYMMETRICALLY ON BOTH SIDES OF THE WALL ASSEMBLY. THE HOURLY F RATING OF THE FIRESTOP SYSTEM IS DEPENDENT UPON THE HOURLY FIRE RATING OF THE WALL ASSEMBLY IN WHICH IT IS INSTALLED, AS SHOWN IN THE FOLLOWING TABLE. THE HOURLY T RATING OF THE FIRESTOP SYSTEM IS DEPENDENT UPON THE TYPE OR SIZE OF THE PIPE OR CONDUIT AND THE HOURLY FIRE RATING OF THE WALL ASSEMBLY IN WHICH IT IS INSTALLED, AS TABULATED BELOW:

MAX PIPE DIAM, IN.	ANNULAR SPACE, IN.	F RATING, HR.	T RATING, HR.
1	0 TO 3/16	1 OR 2	0+, 1 OR 2
1	1/4 TO 1/2	3 OR 4	3 OR 4
4	0 TO 1/4	1 OR 2	0
4	0 TO 1 1/2 #	1 OR 2	0
6	1/4 TO 1/2	3 OR 4	0
12	3/16 TO 3/8	1 OR 2	0

+WHEN COPPER PIPE IS USED, T RATING IS 0 HR.
#0 TO 1-1/2" IN. ANNULAR SPACE APPLIES ONLY WHEN TYPE CP-25 WB+ CAULK IS USED AND ONLY WHEN THE MIN THICKNESS OF THE GYPSUM WALLBOARD IS 5/8 IN. FOR 1 HR RATED WALLS AND 1-1/4 IN. FOR 2 HR RATED WALLS.
MINNESOTA MINING & MFG. CO. – CP 25WB+

8 PIPE PENETRATION (RATED WALL)

M401 REF. NONE SCALE: NONE

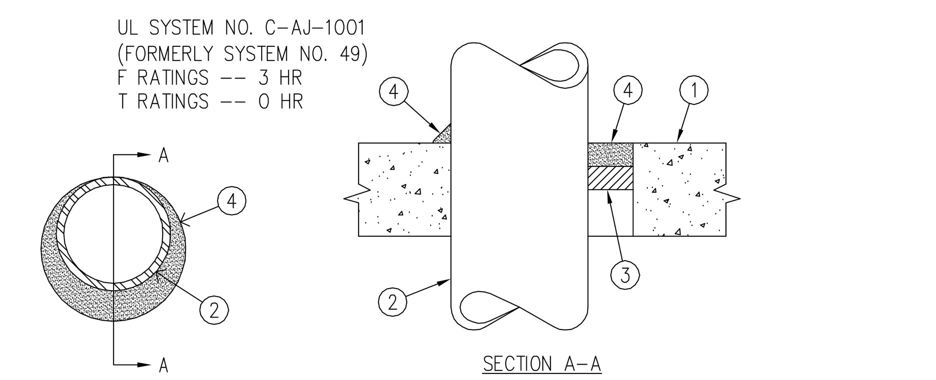

1. FLOOR OR WALL ASSEMBLY – MIN 4-1/2 IN. THICK LIGHTWEIGHT OR NORMAL WEIGHT (100-150 PCF) CONCRETE. WALL MAY ALSO BE CONSTRUCTED OF ANY UL CLASSIFIED CONCRETE BLOCKS*. MAX DIAM OF CIRCULAR THROUGH OPENING IS 22-1/2 IN.
   SEE CONCRETE BLOCKS (CAZT) CATEGORY IN THE FIRE RESISTIVE DIRECTORY FOR NAMES OF MANUFACTURERS.
1A. STEEL SLEEVE – (OPTIONAL, NOT SHOWN) – NOM 12 IN. DIAM (OR SMALLER) SCHEDULE 40 (OR HEAVIER) STEEL PIPE SLEEVE CAST INTO CONCRETE FLOOR OR WALL. SLEEVE TO BE FLUSH WITH OR PROJECT MAX 2 IN. FROM TOP SURFACE OF FLOOR OR FROM BOTH SURFACES OF WALL.
2. PIPE OR CONDUIT – NOM 20 IN. DIAM (OR SMALLER) SCHEDULE 10 (OR HEAVIER) STEEL PIPE, NOM 6 IN. DIAM (OR SMALLER) STEEL CONDUIT OR TYPE L (OR HEAVIER) COPPER TUBE, NOM 4 IN. DIAM (OR SMALLER) CAST IRON PIPE OR STEEL EMT. MAX ANNULAR SPACE BETWEEN PIPE OR CONDUIT AND EDGE OF THROUGH OPENING NOT TO EXCEED 2-1/2 IN. MAX ONE PIPE OR CONDUIT PER THROUGH OPENING. MIN ANNULAR SPACE BETWEEN PIPE OR CONDUIT AND EDGE OF THROUGH OPENING IS ZERO IN. (POINT CONTACT). PIPE OR CONDUIT TO BE RIGIDLY SUPPORTED ON BOTH SIDES OF FLOOR OR WALL ASSEMBLY.
3. PACKING MATERIAL – POLYETHYLENE BACKER ROD OR NOM 1 IN. THICKNESS OF TIGHTLY PACKED CERAMIC (ALUMINA SILICA) FIBER BLANKET, MINERAL WOOL BATT OR GLASS FIBER INSULATION MATERIAL USED AS A PERMANENT FORM. PACKING MATERIAL TO BE RECESSED FROM TOP SURFACE OF FLOOR OR BOTH SURFACES OF SOLID CONCRETE OR CONCRETE BLOCK WALL AS REQUIRED TO ACCOMMODATE THE REQUIRED THICKNESS OF CAULK FILL MATERIAL (ITEM 4). AS AN ALTERNATE WHEN MAX PIPE SIZE IS 10 IN. DIAM AND WHEN MAX ANNULAR SPACE IS 1 IN., A MIN 1 IN. THICKNESS CERAMIC FIBER BLANKET OR MINERAL WOOL BATT PACKING MATERIAL MAY BE RECESSED MIN 1/2. FROM BOTTOM SURFACE OF FLOOR OR FROM EITHER SIDE OF SOLID CONCRETE WALL.

FILL, VOID OR CAVITY MATERIAL BEARING THE UL CLASSIFICATION MARKING (CAULK) – APPLIED TO THE ANNULAR SPACE TO THE MIN THICKNESS SHOWN IN THE FOLLOWING TABLE:

MAX PIPE DIAM, IN.	MAX. ANNULAR SPACE IN.	PACKING MATERIAL TYPE (A)	MIN. CAULK THICKNESS IN
10"	1"	BR, CF, GF OR MW	1/2" (B)
10"	1"	CF OR MW	1/2" (C)
20"	2 1/2"	BR, CF, GF OR MW	1" (B)

(A)BR=POLYETHYLENE BACKER ROD, CF=CERAMIC FIBER BLANKET, MW=MINERAL WOOL BATT
(B)CAULK INSTALLED FLUSH WITH TOP SURFACE OF FLOOR OR BOTH SURFACES OF WALL
(C)CAULK INSTALLED FLUSH WITH BOTTOM SURFACE OF FLOOR OR ONE SURFACE OF SOLID (NON-CONCRETE BLOCK) WALL
MINNESOTA MINING & MFG. CO. – CP 25N/S

7 PIPE PENETRATION (RATED FLOOR)

M401 REF. NONE SCALE: NONE

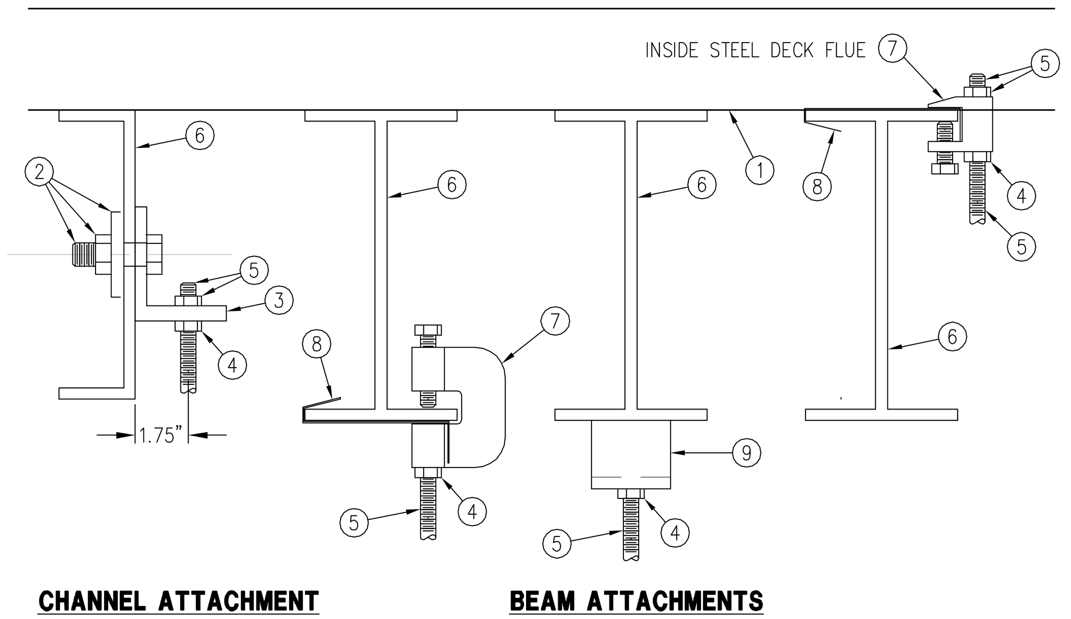

HANGER & BOLT SCHEDULE FOR CHANNEL ATTACHMENT					
HANGER SIZE (IN)	ALLOWABLE LOAD, (LBS)	BOLT SIZE (IN)	HOLE SIZE (IN)	NUMBER OF BOLTS	ANGLE SIZE (IN)
1/4"	240	3/8"	1/2"	2	3"x3"x1/4"
3/8"	610	1/2"	5/8"	2	3"x3"x1/4"
1/2"	1,130	5/8"	3/4"	2	3"x3"x1/4"
5/8"	NOT ALLOWED	–	–	–	–

DETAIL NOTES:
1. STEEL ROOF DECK. DO NOT SUPPORT OR BRACE PIPES, DUCTS OR EQUIPMENT FROM ROOF DECK. SUPPORT AS DETAILED FROM BEAM OR SPREADERS.
2. MACHINE BOLT, NUT AND WASHER. REFER TO SCHEDULE FOR BOLT SIZE.
3. 3x3x1/4 x 4" LONG STEEL CLIP ANGLE
4. CINCH NUT
5. THREADED HANGER ROD AND NUT AS INDICATED BY LOAD OR SCHEDULED IN SPECIFICATIONS. REFER TO SCHEDULE FOR MAXIMUM ALLOWABLE LOAD.
6. STRUCTURAL STEEL BEAM OR SUPPLEMENTAL STEEL SPREADER.
7. ADJUSTABLE STEEL BEAM CLAMP WITH RESTRAINING STRAP FOR PIPES. CONCRETE INSERTS MAY BE SUBSTITUTED FOR USE IN REINFORCED CONCRETE DECK.
8. RESTRAINING STRAP.
9. WELDED BEAM ATTACHMENT.
10. STRUCTURAL JOIST.
11. 2 1/2"x1 1/4" METAL FRAMING

4 UPPER HANGER ROD ATTACHMENTS

M401 REF. NONE SCALE: NONE

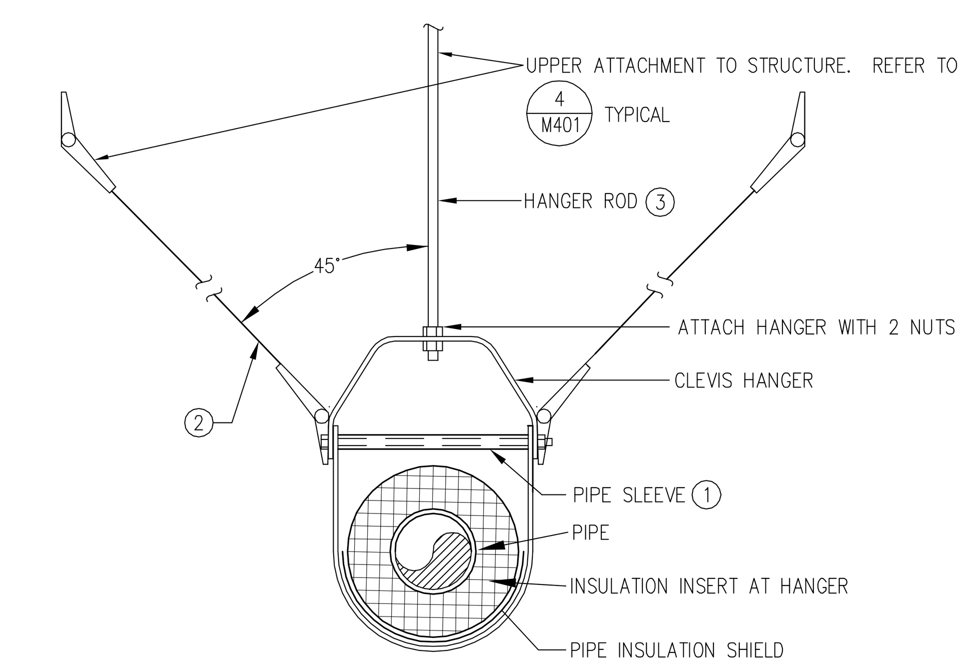

DETAIL NOTES:
1. REQUIRED AT TRANSVERSE BRACES ONLY. INSIDE DIAMETER OF SLEEVE IS 1/2" LARGER THAN BOLT.
2. SEE SPECIFICATIONS FOR BRACING REQUIREMENTS. SLACK CABLE RESTRAINTS ONLY REQUIRED AT TRANSVERSE BRACES.
3. SEE SPECIFICATIONS FOR HANGER SIZE.
4. FOR MULTIPLE PIPES, TRAPEZE SUPPORTS MAY BE USED. DESIGN TRAPEZE SUPPORTS PER SMACNA SEISMIC RESTRAINT MANUAL.

1 PIPE SUPPORT

M401 REF. NONE SCALE: NONE

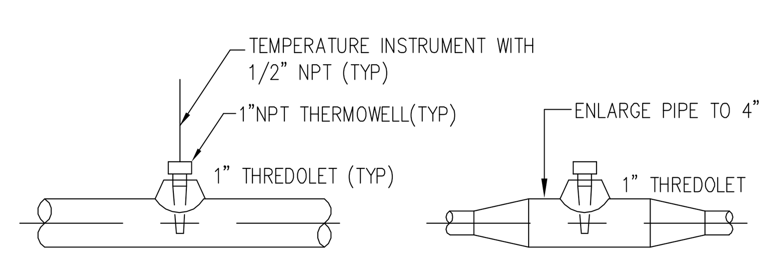

6 THERMOWELLS

M401 REF. NONE SCALE: NONE

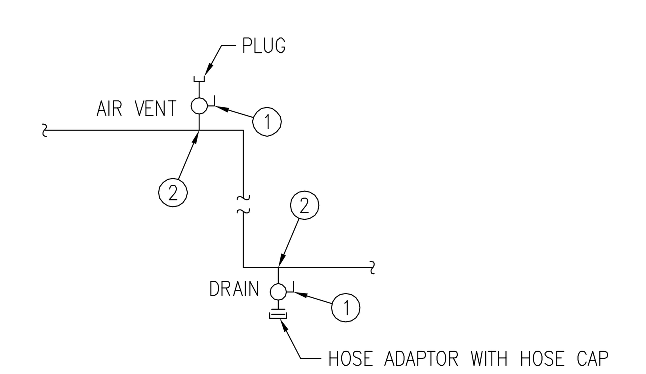

NOTE:
1. BALL VALVE: USE 1/2" BALL VALVE FOR PIPE SIZES UNDER 10". USE 3/4" BALL VALVE FOR PIPE SIZES 10" AND LARGER.
2. PIPE CONNECTION: FULL SIZE BRANCH TEE WITH REDUCER, OR THREADOLET.

3 MANUAL VENT & DRAIN

M401 REF. NONE SCALE: NONE

PROJECT STATUS
BID SET 04/30/09

ISSUE
MARK | DATE | DESCRIPTION | INITIAL

DRAWN	J HO	DATE
DESIGNED	M CALLAHAN	DATE
CHECKED	S PAINTER	DATE
PROJ MGR	J GRANT	DATE
REQUESTOR	R SCHULER	DATE
R&QA		DATE
SAFETY		DATE
SUPERVISOR	S FRANKEL	DATE

Ames Research Center
Moffet Field, California

N232 COLLABORATIVE SUPPORT FACILITY
MECHANICAL
DETAILS

SIZE D | CAGE CODE 25307 | A232-0800- | M401 | REV
SCALE | INDEX | SHEET | OF

DWG: R:\232\N232 Collaborative Support Facility\500_CAD\CAD\Drawings\M401.dwg User: jjho
DATE: Apr 30, 2009 – 1:22:37 pm Images:
Xrefs: "XBDR-SHORT

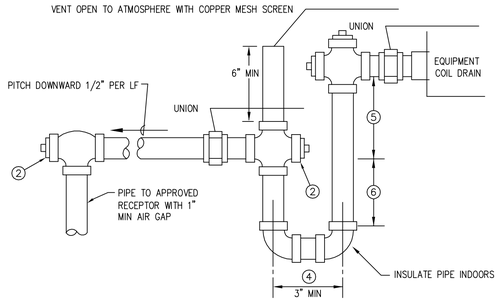

DRAW-THROUGH UNITS

DETAIL NOTES:
1. SEE EQUIPMENT SCHEDULE FOR TRAP SIZE, NOT LESS THAN EQUIPMENT CONNECTION. MANUALLY FILL TRAP BEFORE START UP TO FORM INITIAL SEAL.
2. PIPE TEE OR CROSS WITH CLEANOUT PLUG.
3. PIPING SHALL BE DWV COPPER TUBING.
4. OFFSET DRAIN LINE RISER FROM CONNECTION TO PAN FOR ACCESS TO CLEANOUT PLUGS.
5. DRAIN INVERT: (FSP-ESP) IN "WG+1".
6. TRAP SEAL: ½ x (FSP-ESP) IN "WG+1", 2" MIN.

8 CONDENSATE TRAP

M402 REF. NONE SCALE: NONE

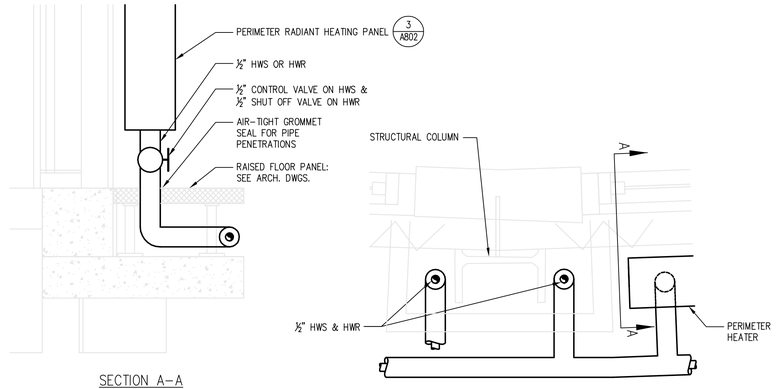

SECTION A-A

DETAIL NOTES:
1. SEE M301 FOR SECTION SHOWING RISER WITH OFFSETS AROUND BEAM.
2. WALL MOUNT HEATING PANELS ON HANGERS. SECURE HANGERS TO CURTAIL WALL ASSEMBLY ONLY WERE PERMITTED BY ARCHITECT. MODIFY HANGERS IF REQUIRED FOR PERMITTED ANCHOR POINTS.

5 HEATING WATER RISER PIPING

M402 REF. NONE SCALE: 1" = 1'-0"

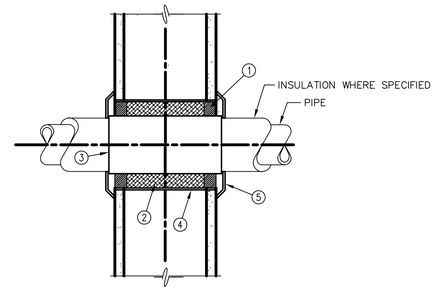

DETAIL NOTES:
1. SEALANT: SEAL BOTH SIDES WITH ½" THICK UL RATED FIRE STOP CAULK: MINNESOTA MINING AND MFG CO CP 25WB+ FIRE STOP, OR APPROVED EQUAL.
2. CENTER PIPE WITH ½" MIN SPACE BETWEEN PIPE AND WALL SLEEVE. FILL ANNULUS VOID WITH 4 PCF MINERAL WOOL SAFING.
3. INSTALL GSM PIPE INSULATION PROTECTION SHIELD FOR INSULATED PIPES.
4. GSM WALL SLEEVE.
5. CHROME COLLAR ESCUTCHEON AROUND PIPE IN FINISHED AREA, TYPICAL.

2 PIPE PENETRATION (NON-RATED WALL)

M402 REF. NONE SCALE: NONE

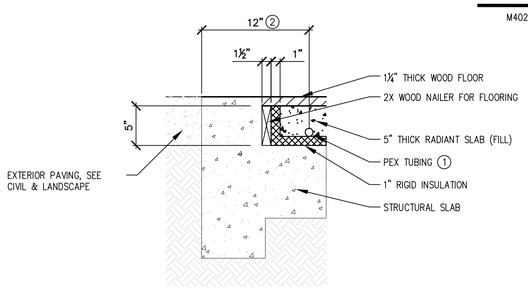

DETAIL NOTES:
1. SEE SLAB SCHEDULE FOR SIZE AND SPACING.
2. 12" FROM EXTERIOR WALL TO FIRST TUBE ROW.

10 RADIANT FLOOR SLAB

M402 REF. NONE SCALE: NONE

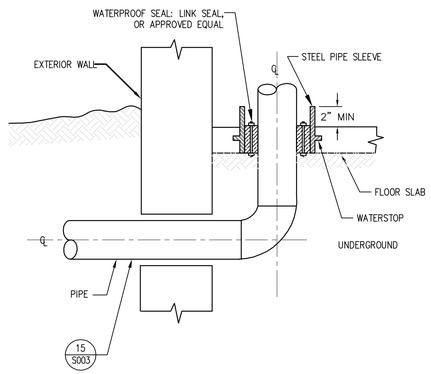

7 PIPE BUILDING ENTRY

M402 REF. NONE SCALE: NONE

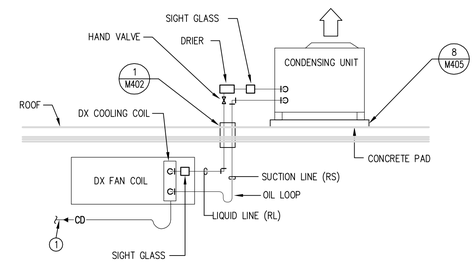

DETAIL NOTES:
1. ROUTE CD TO PLUMBING RECEPTOR PER DAC SCHEDULE. INSTALL CONDENSATE TRAP PER DETAIL 8/M402.

4 DUCTLESS SPLIT PIPING (DAC-1, 2, 3)

M402 REF. NONE SCALE: NONE

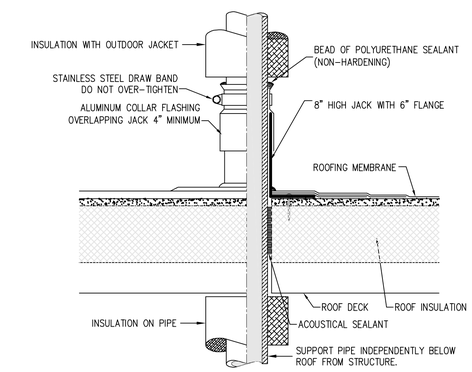

DETAIL NOTE:
REFER TO ARCHITECTURAL DWGS FOR SPECIFIC ROOF FLASHING AND ROOF SEALING REQUIREMENTS.

1 PIPE PENETRATION (ROOF)

M402 REF. NONE SCALE: NONE

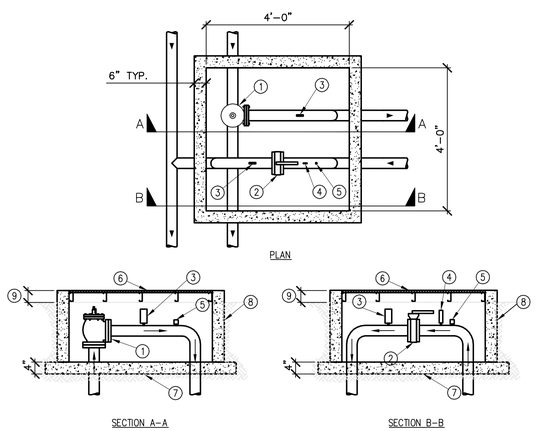

DETAIL NOTES:
1. 3" TRIPLE DUTY VALVE.
2. 3" CPVC BUTTERFLY VALVE WITH FLANGED CONNECTIONS.
3. AIR VENT.
4. THERMOSTAT.
5. PRESSURE AND TEMPERATURE TEST PLUG (PTT).
6. 48"x48" ALUMINUM HINGED COVER PLATE.
7. 4" CONCRETE SLAB ON GRADE.
8. PROVIDE VAULT EXTENSION AS NECESSARY.
9. INSTALL VALVE BOX 4" ABOVE GRADE.

9 CONCRETE VALVE BOX

M402 REF. NONE SCALE: NONE

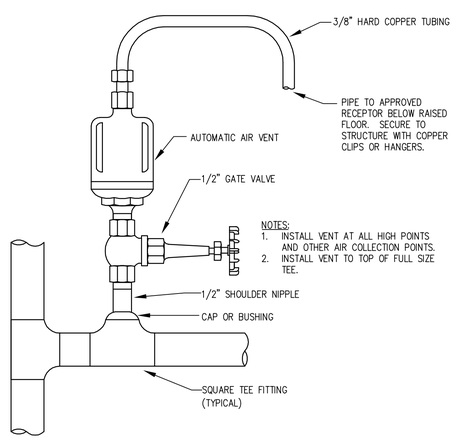

NOTES:
1. INSTALL VENT AT ALL HIGH POINTS AND OTHER AIR COLLECTION POINTS.
2. INSTALL VENT TO TOP OF FULL SIZE TEE.

6 AUTOMATIC AIR VENT

M402 REF. NONE SCALE: NONE

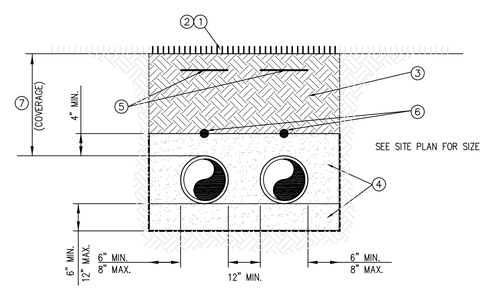

DETAIL NOTES:
1. REPLACE EXISTING SOD MATCH EXISTING.
2. SIDEWALK: SEE SITE PLAN FOR LOCATION. REFER TO SPECIFICATIONS FOR SIDEWALK AND AGGREGATE BASE INSTALLATION.
3. IMPORTED BORROW MECHANICALLY COMPACTED TO 95% RELATIVE DENSITY MINIMUM.
4. SAND BEDDING MATERIAL: COMPACT TO 95% RELATIVE DENSITY.
5. TRACER WARNING TAPE: 18" BELOW GRADE.
6. TRACER WIRE: 14 AWG AT 4" ABOVE TOP OF PIPE.
7. SEE SITE PLAN M140 FOR BURIAL DEPTH.

3 TRENCH SECTION (GWS & GWR)

M402 REF. NONE SCALE: NONE

PROJECT STATUS

BID SET 04/30/09

ISSUE			
MARK	DATE	DESCRIPTION	INITIAL

		DATE
DRAWN	J HO	
DESIGNED	M CALLAHAN	
CHECKED	S PAINTER	
PROJMGR	J GRANT	
REQUESTOR	R SCHULER	
R&QA		
SAFETY		
SUPERVISOR	S FRANKEL	

Ames Research Center
Moffet Field, California

N232 COLLABORATIVE SUPPORT FACILITY
MECHANICAL
PIPING DETAILS

SIZE	CAGE CODE		REV
D	25307	A232-0800- M402	
SCALE		INDEX	SHEET OF

DWG: R:\232\W232 Collaborative Support Facility\500_CAD\CAD\Drawings\M402.dwg User: jjlho
DATE: Apr 30, 2009 - 1:22:16 pm Images: C:\Documents and Settings\jho\My Documents\My Pictures\circuit setter.JPG"C:\Documents and Settings\jho\My Documents\My Pictures\external column_2.JPG"C:\Documents and Settings\jho\My Documents\My Pictures\external column_1.JPG"C:\Documents and Settings\jho\My Documents\My Pictures\external wall_2.JPG"
Xrefs: XBDIR-3HORT

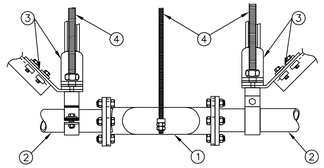

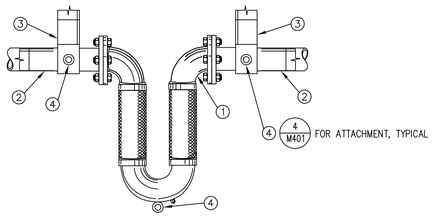

DETAIL NOTES:
1. SEISMIC PIPE JOINT
2. PIPE. SEE PLAN FOR SIZES
3. REFER TO SMACNA FOR UPPER ATTACHMENT OF BRACING TO STRUCTURE
4. THREADED HANGER ROD AND NUT AS SCHEDULED IN SPECIFICATIONS. REFER TO SCHEDULE FOR MAXIMUM ALLOWABLE LOAD.

9 SEISMIC JOINT SUPPORT

M403 REF. NONE SCALE: NONE

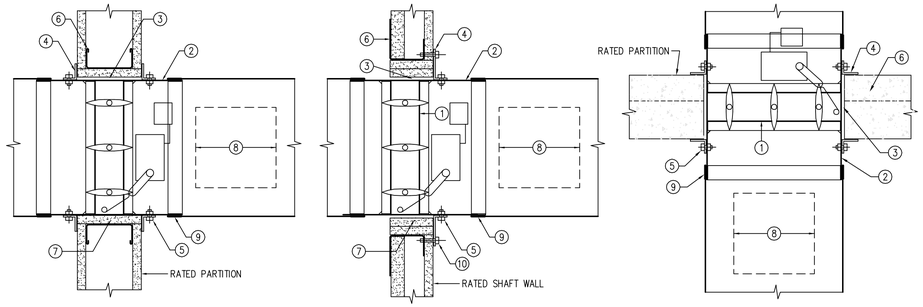

DETAIL NOTES:
1. COMBINATION FIRE AND SMOKE DAMPER: CALIFORNIA STATE FIRE MARSHALL APPROVED. DAMPER DETAIL IS FOR REFERENCE ONLY. DAMPERS SHALL BE LABELED BY AN APPROVED AGENCY AND INSTALLED STRICTLY PER MANUFACTURER'S PRINTED INSTRUCTIONS. MANUFACTURER'S INSTALLATION INSTRUCTIONS SHALL BE MADE AVAILABLE TO THE INSPECTING AUTHORITIES. DAMPER SHALL BE DYNAMIC TYPE WITH ATTACHMENT TO SLEEVE BY DAMPER MFR. INSTALL DAMPER ASSEMBLY PERPENDICULAR TO WALL.
2. SLEEVE: 14 GA. MIN., EXCEPT 16 GA. IF DAMPER IS LESS THAN 36". SLEEVE EXTEND 3" MIN. TO 6" MAX. BEYOND EACH SIDE OF PARTITION. EXTEND 16" MAX. FROM WALL IF SUPPLIED WITH INTEGRAL FACTORY INSTALLED ACCESS DOOR.
3. EXPANSION GAP: MINIMUM: ⅛" PER FOOT OF DUCT WIDTH OR HEIGHT. MAXIMUM: ⅜" PER FOOT +1"
4. RETAINING ANGLE: 1½"x1½"x14 GA. STEEL FASTENED TO SLEEVE ONLY. OVERLAP EXPANSION GAP 1" MINIMUM.
5. ANGLE FASTENERS: 5" ON CENTER MAX., MIN. 2 EACH SIDE, MAX. 2" FROM EACH CORNER. WELDS: 1" MIN. LONG FILLETS; BOLTS: ¼"-20; SCREWS: #10 SHEET METAL (30" DUCT MAX.)
6. STEEL STUD FRAMING: 25 GA. MIN. ALL FOUR SIDES. DOUBLE FRAMING FOR WOOD STUDS.
7. FIRE RESISTIVE LINING: EQUAL TO FIRE RESISTIVE RATING OF WALL.
8. DUCT ACCESS PANEL: PROVIDE ACCESS TO FIRESTATS AND FIRE DAMPER BLADES FOR INSPECTION AND SERVICING. ACCESS PANEL LABEL: "FIRE/SMOKE DAMPER" 1½" HEIGHT LETTERS. ATTACH TO INSULATION.
9. DUCT ATTACHMENT: S-SLIP JOINT, SEAL WITH DUCT TAPE OR NON-HARDENING NON-COMBUSTIBLE MASTIC COMPOUND. DO NOT SCREW OR BOLT. ALTERNATE: DUCTMATE BREAKAWAY CONNECTIONS WHEN LISTED FOR USE WITH DAMPER, OR S-AND-DRIVEMATE #14880.
10. FASTEN SLEEVE TO SHAFT WALL STUD FRAMING WITH #10 SCREWS, MINIMUM TWO PER SIDE (DUCTS OVER 21": MINIMUM 3 AT TOP AND BOTTOM).

5 COMBINATION FIRE & SMOKE DAMPER

M403 REF. NONE SCALE: NONE

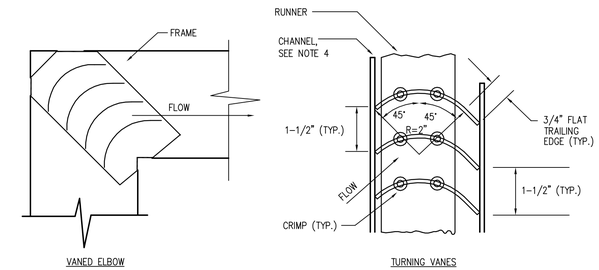

NOTES:
1. MAXIMUM UNSUPPORTED VANE LENGTH 36"
2. VANES AND FRAMES – 24 GAUGE
3. DUCT INLET AND OUTLET DIMENSIONS TO BE EQUAL
4. FOR HIGH VELOCITY APPLICATIONS PROVIDE 18 GAUGE CHANNEL AND TACK WELD VANE EDGES TO CHANNEL, TYPICAL BOTH ENDS
5. FRAMES AND CHANNELS – BOLTED OR TACK WELDED TO ELBOW

2 TURNING VANE

M403 REF. NONE SCALE: NONE

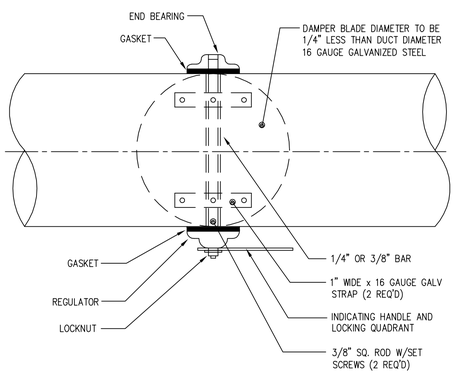

8 ROUND MANUAL VOLUME DAMPER

M403 REF. NONE SCALE: NONE

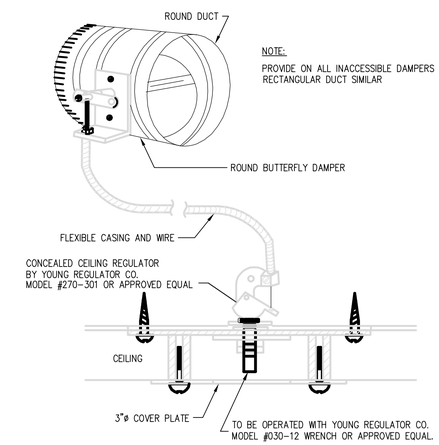

NOTE:
PROVIDE ON ALL INACCESSIBLE DAMPERS RECTANGULAR DUCT SIMILAR

1 DAMPER AND REGULATOR

M403 REF. NONE SCALE: NONE

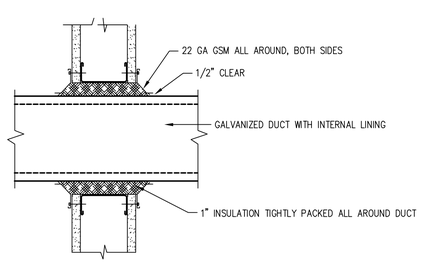

DETAIL NOTES:
1. DRYWALL METAL STUDS OR ANY OTHER RIGID MATERIAL MUST NOT TOUCH DUCT.
2. SUPPORT DUCT FROM HANGERS FOR ACOUSTICAL CONTROL.

7 DUCT PENETRATION (NON-RATED PARTITION)

M403 REF. NONE SCALE: NONE

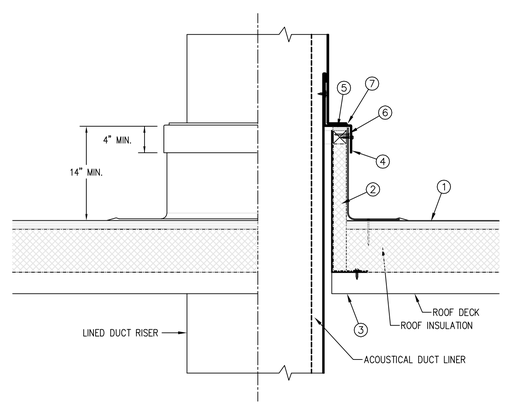

DETAIL NOTES:
1. MEMBRANE ROOFING. SEE ARCHITECTURAL DWGS FOR ROOF FLASHING AND ROOF SEALING REQUIREMENTS.
2. PREFABRICATED ROOF CURB WITH RIGID INSULATION. SECURE TO ROOF DECK WITH SHEET METAL SCREWS AT 8" ON CENTER, MINIMUM THREE EACH SIDE.
3. REFER TO STRUCTURAL DWGS FOR FRAMING OF ROOF OPENING.
4. 16 GA GALVANIZED SHEET METAL CURB CAP. SECURE CURB CAP TO CURB WITH TWO #10 SHEET METAL SCREW EACH SIDE.
5. ½" THICK PVC FOAM GASKET TAPE BETWEEN CURB CAP AND CURB.
6. SECURE MEMBRANE FLASHING TO TOP OF CURB.
7. BEAD OF POLYURETHANE SEALANT (NON-HARDENING)

6 DUCT PENETRATION THROUGH ROOF

M403 REF. NONE SCALE: NONE

4 NOT USED

M403 REF. NONE SCALE: NONE

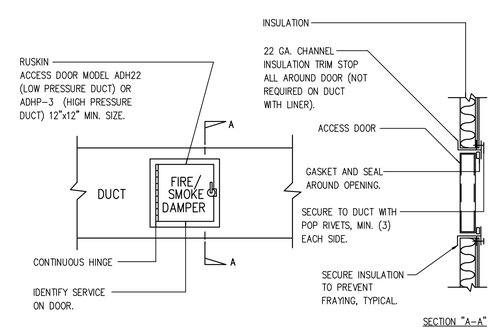

3 ACCESS DOOR

M403 REF. NONE SCALE: NONE

PROJECT STATUS

BID SET 04/30/09

ISSUE			
MARK	DATE	DESCRIPTION	INITIAL

DRAWN	J HO	DATE
DESIGNED	M CALLAHAN	DATE
CHECKED	S PAINTER	DATE
PROJMGR	J GRANT	DATE
REQUESTOR	R SCHULER	DATE
R&QA		DATE
SAFETY		DATE
SUPERVISOR	S FRANKEL	DATE

Ames Research Center
Moffet Field, California

N232 COLLABORATIVE SUPPORT FACILITY
MECHANICAL
DETAILS

SIZE	CAGE CODE		REV
D	25307	A232-0800- M403	
SCALE		INDEX	SHEET OF

DWG: R:\232\W232 Collaborative Support Facility\500_CAD\CAD\Drawings\M403.dwg User: jjiho
DATE: Apr 30, 2009 - 1:22:04 pm Images:
Xrefs: 7KBDR-4HORT

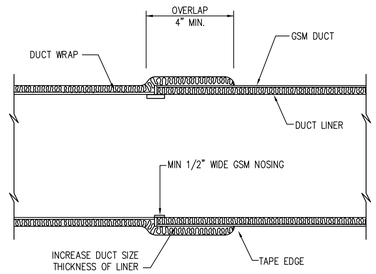

8 DUCT WRAP TO LINER TRANSITION

M404 REF. NONE SCALE: NONE

REFERENCE:
SIMILAR TO SMACNA
FIG. 2-7, 2005 SMACNA
DUCT CONSTRUCTION
STANDARDS – 1st EDITION.

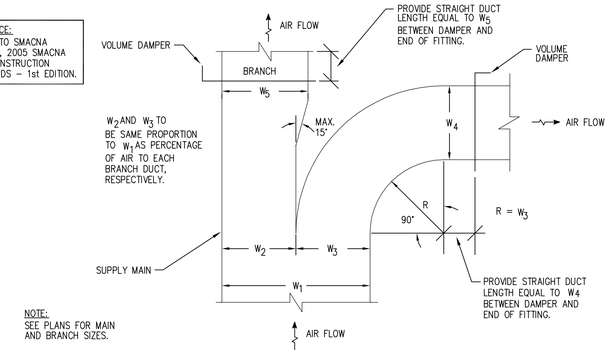

NOTE:
SEE PLANS FOR MAIN
AND BRANCH SIZES.

5 DUCT SPLIT WITH RADIUS BRANCH

M404 REF. NONE SCALE: NONE

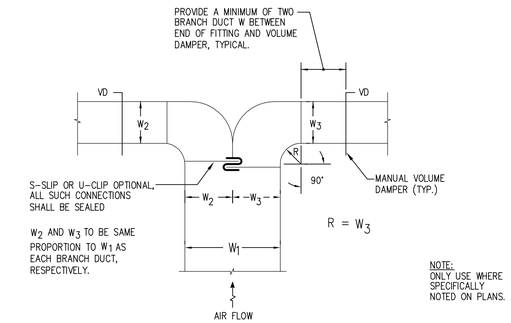

NOTE:
ONLY USE WHERE
SPECIFICALLY
NOTED ON PLANS.

2 DUCT SPLIT WITH RADIUS ELBOWS

M404 REF. NONE SCALE: NONE

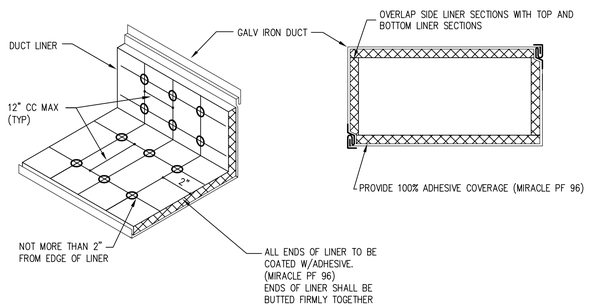

METAL FASTENERS:

OMARK INSUL-PINS, DURO DYNE FASTENERS
OR GRIP NAILS.
GRIP NAILS SHALL BE INSTALLED
BY "GRIPNAIL AIR HAMMER" OR BY
"AUTOMATIC FASTENER EQUIP."

NOTE:

ALL SUPPLY AIR DUCTS SHALL
BE WRAPPED EXTERNALLY AS
PER SPECIFICATIONS

7 DUCT LINER

M404 REF. NONE SCALE: NONE

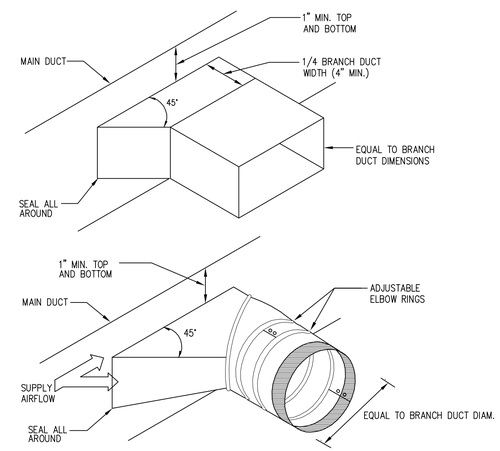

4 DUCT TAKE-OFF DETAIL

M404 REF. NONE SCALE: NONE

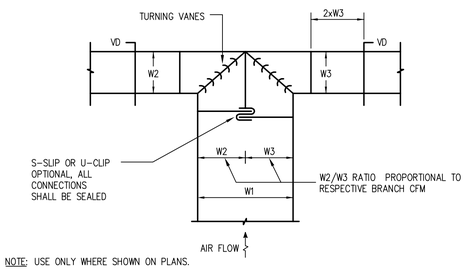

NOTE: USE ONLY WHERE SHOWN ON PLANS.

1 DUCT SPLIT WITH SQUARE ELBOWS

M404 REF. NONE SCALE: NONE

REFERENCE:
SIMILAR TO SMACNA
FIG. 2-7, 2005 SMACNA
DUCT CONSTRUCTION
STANDARDS – 1st EDITION.

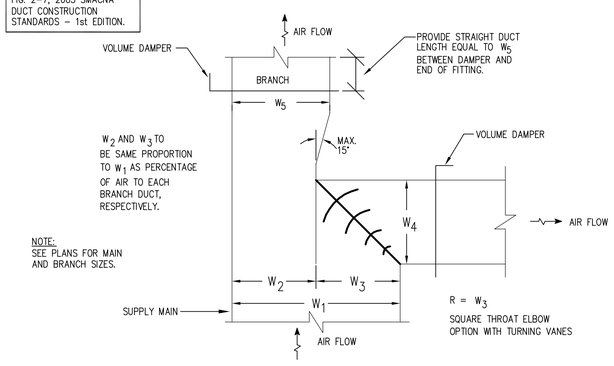

NOTE:
SEE PLANS FOR MAIN
AND BRANCH SIZES.

6 DUCT SPLIT WITH SQUARE ELBOW BRANCH

M404 REF. NONE SCALE: NONE

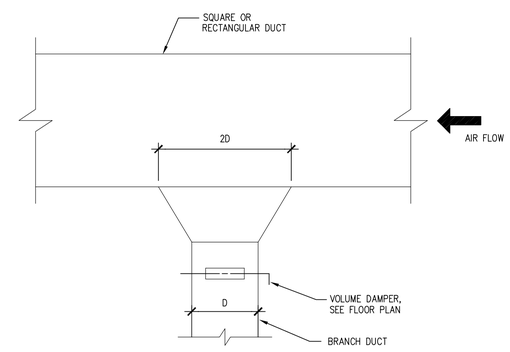

3 CONICAL BRANCH TAKE-OFF

M404 REF. NONE SCALE: NONE

PROJECT STATUS

BID SET 04/30/09

ISSUE			
MARK	DATE	DESCRIPTION	INITIAL

DRAWN	J HO	DATE
DESIGNED	M CALLAHAN	DATE
CHECKED	S PAINTER	DATE
PROJMGR	J GRANT	DATE
REQUESTOR	R SCHULER	DATE
R&QA		DATE
SAFETY		DATE
SUPERVISOR	S FRANKEL	DATE

Ames Research Center
Moffet Field, California

N232 COLLABORATIVE SUPPORT FACILITY
MECHANICAL
DUCT DETAILS

SIZE	CAGE CODE		REV
D	25307	A232-0800- M404	
SCALE		INDEX	SHEET OF

DWG: R:\232\N232 Collaborative Support Facility\500_CAD\CAD\Drawings\M404.dwg User: jjho
DATE: Apr 30, 2009 – 1:21:53 pm Images:
Xrefs: RGDR-SHGRT

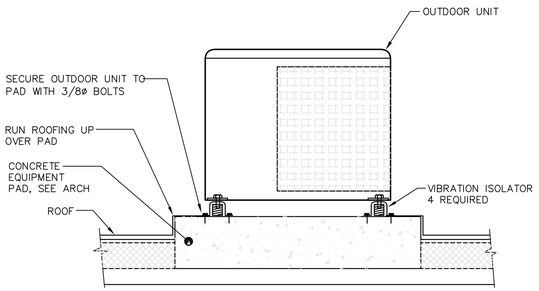

8 CONDENSING UNIT PAD

M405 REF. NONE SCALE: NONE

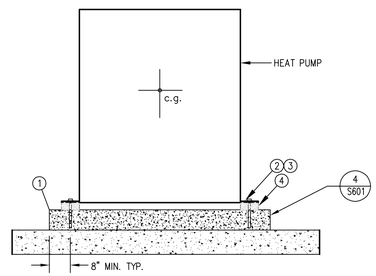

DETAIL NOTES:
1. EQUIPMENT PAD: 6" THICK REINFORCED CONCRETE.
2. ANCHOR BOLT TESTING: REFER TO TESTING NOTES ON THIS DRAWING.
3. ADHESIVE ANCHOR BOLT (HILTI RE-500SD, OR EQUAL) WITH REQUIRED MINIMUM EMBEDMENT WITH NUT, WASHER AND NEOPRENE GROMMET, ONE REQUIRED AT EACH CORNER. LOAD TEST.
4. VIBRATION ISOLATOR, TYPICAL AT EACH ANCHOR.

5 HEAT PUMP ANCHORAGE

M405 REF. NONE SCALE: NONE

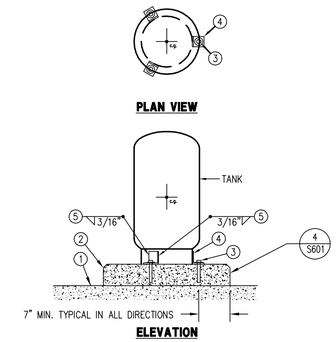

DETAIL NOTES:
1. EXISTING STRUCTURAL FLOOR SLAB
2. HOUSEKEEPING PAD. 6" THICK REINFORCED CONCRETE.
3. ½"ø ADHESIVE ANCHOR BOLT WITH NUT AND STEEL WASHER: HILTI RE-500SD, OR EQUAL. THREE BOLTS REQUIRED (ONE FOR EACH CLIP ANGLE). REFER TO SCHEDULE FOR TESTING REQUIREMENTS. INSTALL TO MINIMUM EMBEDMENT SCHEDULED.
4. STEEL MOUNTING CLIP ANGLE: 3"x3"x1/4"x6" LONG. THREE REQUIRED.
5. WELD EACH CLIP ANGLE TO TANK BASE RING, TYPICAL.

3 EXPANSION TANK ANCHORAGE

M405 REF. NONE SCALE: NONE

WEDGE ANCHOR TESTING NOTES:
1. TEST WEDGE ANCHORS IN HARDROCK OR LIGHTWEIGHT CONCRETE TO LOADS SHOWN IN TABLE BELOW.
2. APPLY PROOF TEST LOADS TO ANCHORS WITHOUT REMOVING NUT. IF NUT REMOVAL IS REQUIRED, REMOVE NUT AND INSTALL THREADED COUPLER TO THE SAME TORQUE AS THE ORIGINAL NUT USING A TORQUE WRENCH AND APPLY THE LOAD.
3. REACTION LOADS FROM TEST FIXTURES MAY BE APPLIED IN CLOSE PROXIMITY TO THE ANCHOR BEING TESTED PROVIDED THE ANCHOR IS NOT RESTRAINED FROM WITHDRAWING BY THE FIXTURE(S).
4. TEST EQUIPMENT IS TO BE CALIBRATED BY AN APPROVED TESTING LABORATORY IN ACCORDANCE WITH STANDARD RECOGNIZED PROCEDURES.
5. ACCEPTANCE CRITERIA:
   A. HYDRAULIC RAM METHOD: THE ANCHOR SHOULD HAVE NO OBSERVABLE MOVEMENT AT THE APPLICABLE TEST LOAD. A PRACTICAL METHOD TO DETERMINE OBSERVABLE MOVEMENT IS THAT THE WASHER UNDER THE NUT BECOMES LOOSE.
   B. TORQUE WRENCH METHOD: THE APPLICABLE TEST TORQUE SHALL BE OBTAINED WITHIN ONE HALF (1/2) TURN OF THE NUT.
6. TESTING SHALL OCCUR 24 HOURS MINIMUM AFTER INSTALLATION OF SUBJECT ANCHORS.
7. TESTING SHALL BE PERFORMED IN THE PRESENCE OF THE INSPECTOR OF RECORD (IOR).
8. TEST 50 PERCENT OF INSTALLED ANCHORS. IF ANY ANCHOR FAILS THE TEST, TEST ALL ANCHORS.

ANCHOR DIAMETER (Inches)	TEST LOAD (Lbs.)	TEST TORQUE (Ft-lbs.)	MIN. EMBEDMENT (Inches)
1/4"	800	10	2"
3/8"	1100	25	2½"
1/2"	2000	50	3½"
5/8"	2300	80	4"
3/4"	3700	150	4¾"
1"	5800	250	6"

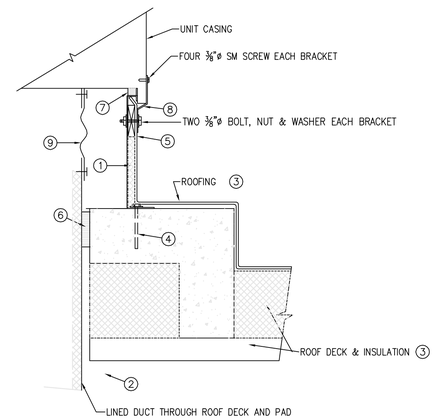

DETAIL NOTES:
1. PREFABRICATED ROOF CURB.
2. REFER TO STRUCTURAL DRAWINGS FOR FRAMING DETAILS OF ROOF OPENINGS.
3. REFER TO ARCHITECTURAL DWGS FOR ADDITIONAL FLASHING DETAILS.
4. SECURE ROOF CURB TO DECK WITH ½"ø ADHESIVE ANCHOR BOLT, NUT AND LOCK WASHERS. LOCATE 12" FROM EACH END AND 24" ON CENTER.
5 FLASH ROOFING TO TOP OF NAILER.
6. SEAL AROUND DUCT AND PIPE PENETRATIONS WITH ACOUSTIC FIRE STOPPING.
7. CLOSED CELL FOAM TAPE BETWEEN CURB CAP AND DUCT FLANGE.
8. SECURE UNIT TO ROOF CURB WITH ½"x3"x⅛" BENT PLATE BRACKETS MINIMUM TWO ON LONG SIDES.
9. FLEXIBLE DUCT CONNECTION TO UNIT.

1 ROOFTOP HEAT PUMP MOUNTING

M405 REF. NONE SCALE: NONE

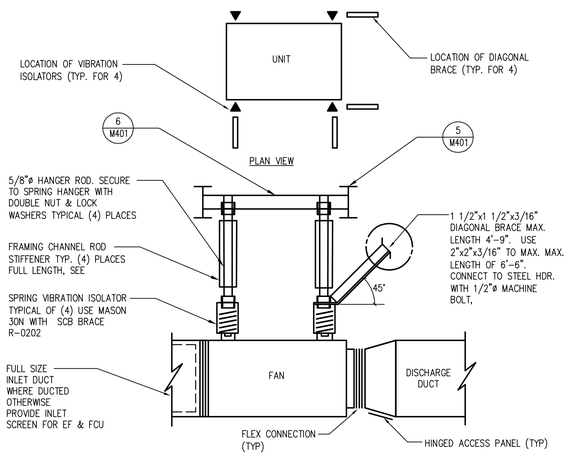

7 IN-LINE FAN (EF-2)

M405 REF. NONE SCALE: NONE

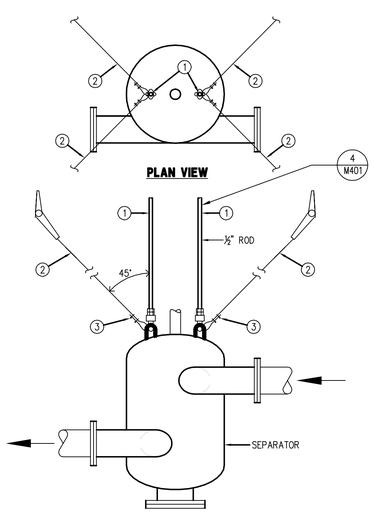

DETAIL NOTES:
1. SEE DETAIL FOR UPPER ATTACHMENT. USE SPREADER OR ATTACH TO TWO DIFFERENT JOISTS.
2. ¼" CABLE BRACE. SEE DETAIL FOR UPPER ATTACHMENT. TYPICAL OF FOUR. SPLAY AT 45°
3. ATTACH CABLE WITH HEAVY WIRE ROPE THIMBLE AND TWO U-BOLT CLAMPS 3" APART TYPICAL.

4 AIR SEPARATOR SUPPORT (MAX 6" SIZE)

M405 REF. NONE SCALE: NONE

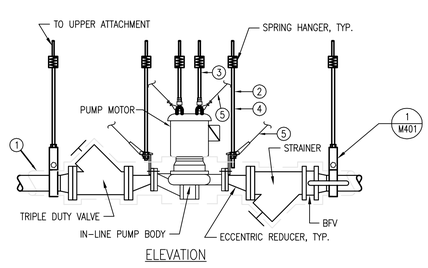

DETAIL NOTES:
1. PIPE INSULATION, WHERE REQUIRED, IS SHOWN DASHED FOR CLARIFY.
2. THREADED HANGER ROD, TYPICAL. SEE SCHEDULE FOR SIZE.
3. FOR PUMPS WITH SUPPORT EYE BOLTS, ATTACH HANGER TO EYE BOLT WITH
4. FOR PUMPS WITHOUT SUPPORT EYE BOLTS, ATTACH HANGER TO INLET AND OUTLET FLANGE BOLT (ONE BOLT) WITH 4"x2"x⅜" STEEL CLIP ANGLE (LLV).
5. PROVIDE ⅛" CABLE SEISMIC BRACING CONFIGURED SIMILAR TO AIR SEPARATOR. SEE DETAIL 4/M405.

6 SUSPENDED VERTICAL IN-LINE PUMP

M405 REF. NONE SCALE: NONE

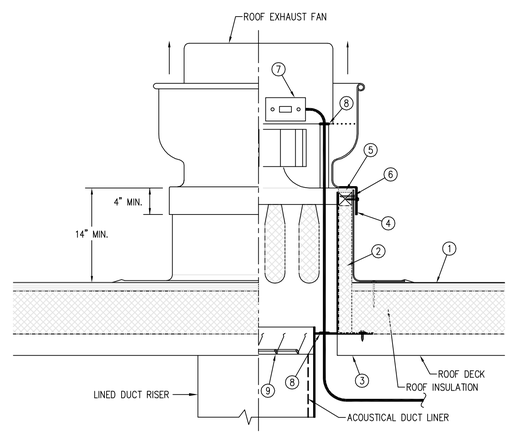

DETAIL NOTES:
1. MEMBRANE ROOFING. SEE ARCHITECTURAL DWGS FOR ROOF FLASHING AND ROOF SEALING REQUIREMENTS.
2. PREFABRICATED SOUND ATTENUATING ROOF CURB WITH RIGID INSULATION. SECURE BASE FLANGE TO ROOF DECK WITH SHEET METAL SCREWS AT 8" ON CENTER, MINIMUM THREE EACH SIDE.
3. REFER TO STRUCTURAL DWGS FOR FRAMING OF ROOF OPENING.
4. FAN CURB CAP. SECURE CURB CAP TO CURB WITH TWO #10 SHEET METAL SCREW EACH SIDE.
5. ¼" THICK X 1½" WIDE PVC FOAM GASKET TAPE BETWEEN FAN CURB CAP AND CURB.
6. SECURE MEMBRANE FLASHING TO TOP OF CURB.
7. ELECTRIC SAFETY DISCONNECT SWITCH.
8. SEAL ELECTRIC POWER ENTRY WEATHERTIGHT WITH GROMMET.
9. BACKDRAFT DAMPER.

2 ROOF EXHAUST FAN

M405 REF. NONE SCALE: NONE

PROJECT STATUS

BID SET 04/30/09

ISSUE			
MARK	DATE	DESCRIPTION	INITIAL

DRAWN	J HO	DATE
DESIGNED	M CALLAHAN	DATE
CHECKED	S PAINTER	DATE
PROJMGR	J GRANT	DATE
REQUESTOR	R SCHULER	DATE
R&QA		DATE
SAFETY		DATE
SUPERVISOR	S FRANKEL	DATE

Ames Research Center
Moffet Field, California

N232 COLLABORATIVE SUPPORT FACILITY
MECHANICAL DETAILS

SIZE	CAGE CODE		REV
D	25307	A232-0800- M405	
SCALE		INDEX	SHEET OF

DWG: R:\232\N232 Collaborative Support Facility\500_CAD\CAD\Drawings\M405.dwg User: jjho
DATE: Apr 30, 2009 - 1:21:42 pm Images:
Xrefs: RDBR-SHORT

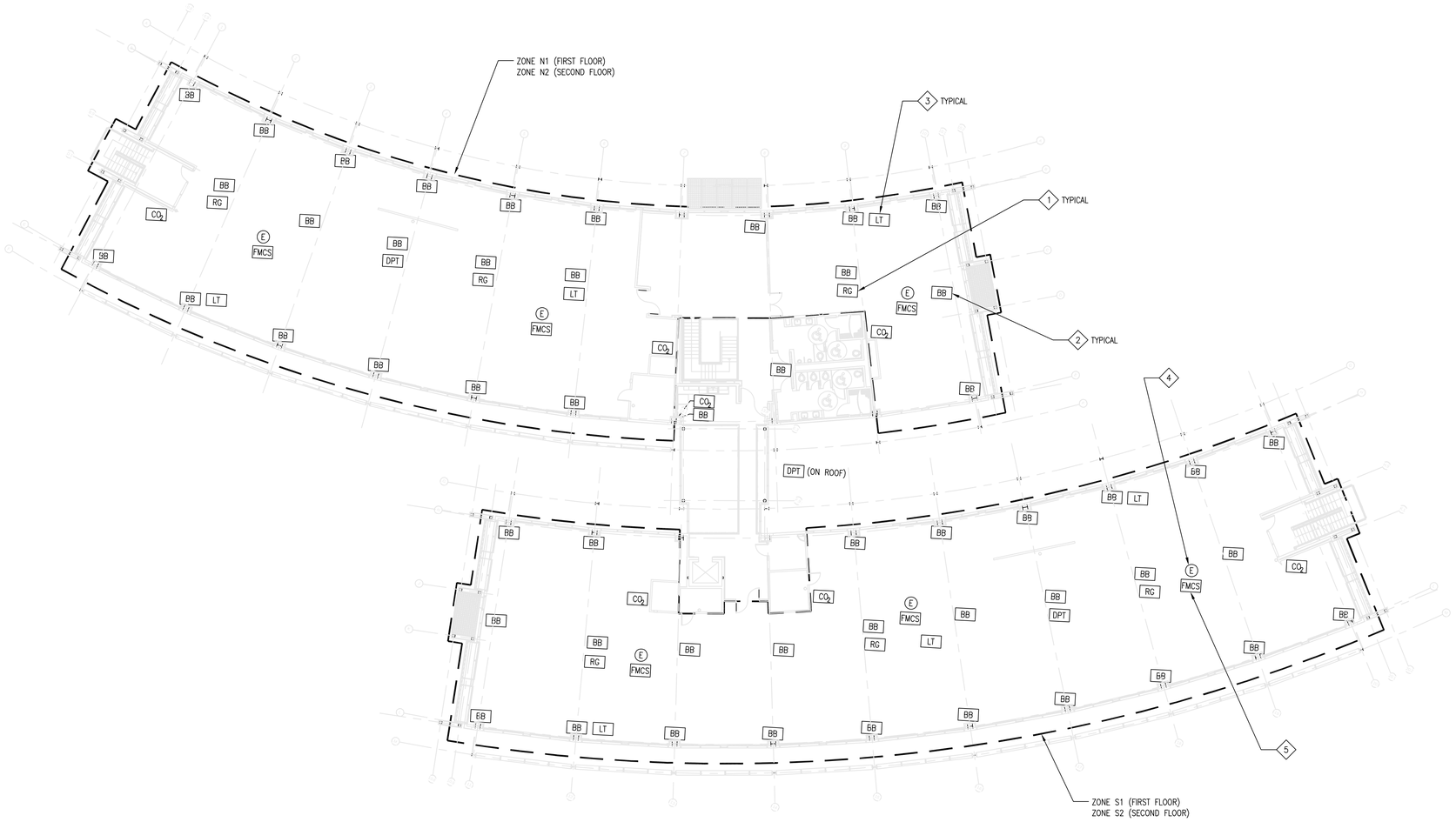

KEY NOTES

1. RED LIGHT/GREEN LIGHT CONTROL OPERATES FOR MANUAL WINDOWS AS FOLLOWS:
   GREEN: WINDOWS FULLY OPEN.
   GREEN & RED: WINDOWS ON MINIMUM SETTING.
   RED: WINDOWS CLOSED.
2. BLACK-BULB THERMOSTATS UNDER NORMAL OPERATION CONTROL LOCAL CHILLED CEILING PANELS: AVERAGE READING USED FOR WINDOW CONTROL
3. LEAK DETECTION TAPE, LOCATED ON CRCP PIPEWORK TAILS
4. ELECTRIC J-BOX WITH 120V POWER FOR CONNECTION TO LOCAL FMCS ENCLOSURE, TYPICAL FOR EACH FLOOR. INSTALL ABOVE CEILING AT UNDERSIDE OF DECK. PROVIDE ONE 120V CIRCUIT PER FLOOR PER WING. COORDINATE LOCATION WITH FMCS DESIGN BY CONTRACTOR.
5. FMCS FIELD PANEL WITH STEP-DOWN TRANSFORMER AND CONTROLLER FOR LOCAL FIELD DEVICES. INSTALL ABOVE CEILING AT UNDERSIDE OF DECK. FINAL LOCATION AND QUANTITY TO BE DETERMINED BY CONTRACTOR DESIGN OF FMCS. TYPICAL EACH FLOOR.

WINDOW CONTROL STRATEGY (PER ZONE)

CONTROL STRATEGY	AVG. ZONE TEMPERATURE	OUTSIDE AIR TEMPERATURE	WINDOW SHUT	WINDOWS MIN. OPENING (6")	WINDOWS FULLY OPEN	MECHANICAL VENTILATION	HEATING	COOLING	LIGHT INDICATION
1	LESS THAN 72°F	LESS THAN 63°F	X			X	X		RED
2	LESS THAN 72°F	63°F–72°F		X			X		R+G
3	72°F–77°F	72°F–77°F			X				G
4	GREATER THAN 77°F	77°F–82°F		X				X	R+G
5	GREATER THAN 77°F	GREATER THAN 82°F	X			X		X	RED

CO_2 OVERRIDE CONTROL

CO_2 LEVEL	WINDOWS OPEN	WINDOWS SHUT
0–500 PPM	NO ACTION	MODULATE DOAS SUPPLY FAN (MIN CFM TO 100%) NOT TO EXCEED 1000 PPM
500–800 PPM	MODULATE DOAS RELIEF FAN	
800–1000 PPM	RED LIGHT CLOSE WINDOWS →	

CONDENSATION OVERRIDE CONTROL

CONDENSATION RISK DETECTION	RISK CLASSIFICATION	ACTION
DPT (OUTDOOR)	LOW	RED LIGHT CLOSE WINDOWS
DPT (OUTDOOR) + DPT (INDOOR)	MEDIUM	RED LIGHT CLOSE WINDOWS RAISE CHS 3°F
DPT (OUTDOOR) + DPT (INDOOR) + LT	HIGH	CLOSE CRCP 2-WAY VALVES

FMCS MONITORING POINTS

- RED LIGHT/GREEN LIGHT COMMAND STATUS
- MOTORIZED WINDOW COMMAND STATUS (NO END SWITCHES)
- CONDENSATION RISK ALARM (LOW/MEDIUM/HIGH) + STATUS
- CO2 LEVELS
- BB OPERATIVE TEMPERATURES
- CRCP VALVE POSITION
- CO2 OVERRIDE ALARM

PROJECT STATUS

BID SET 04/30/09

ISSUE			
MARK	DATE	DESCRIPTION	INITIAL

KEY PLAN

NORTH ARROW

BLDG NORTH (TRUE NORTH)

1/16"=1' 0 8 16 32 48

		DATE
DRAWN	J HO	
DESIGNED	M CALLAHAN	
CHECKED	S PAINTER	
PROJMGR	J GRANT	
REQUESTOR	R SCHULER	
R&QA		
SAFETY		
SUPERVISOR	S FRANKEL	

Ames Research Center
Moffet Field, California

N232 COLLABORATIVE SUPPORT FACILITY
HVAC CONTROL DIAGRAMS
WINDOWS

SIZE	CAGE CODE		REV
D	25307	A232-0800- M501	
SCALE 1/16" = 1'-0"	INDEX	SHEET OF	

DWG: R:\232\N232 Collaborative Support Facility\500_CAD\CAD\Drawings\M501.dwg User: jjho
DATE: Apr 30, 2009 - 12:29 pm Images:
Xrefs: "AMF01" "N232_S09_CENTRAL_rvt-1-Level 1 Export" "MBDR-SHORT" "AMF02" "AB501" "AMF01-SPACEPLAN-N232_S09_CENTRAL_rvt-1-Level1Export

SHEET NOTES:

1. PERIMETER PHOTOCELLS CONTROL BOTH LIGHTING & BLINDS ON ASSOCIATED ELEVATION WITHIN ZONE.
2. INDIVIDUAL BLIND CONTROL/OVERIDE TO BE AVAILABLE VIA BUILDING BMS SYSTEM: NOTIFICATION REQUIRED TO BUILDING TO BUILDING MAINTENANCE TO ACHIEVE OVERRIDE.
3. INTERLOCK BETWEEN BLINDS & CEILING LIGHTING ENSURES BLINDS ARE NEVER LOWERED WITH OVERHEAD LIGHTING ON WITHIN CONTROL ZONE.
4. FINAL LOCATION/QUANTITIES OF PHOTOCELLS & RADIOMETERS TO BE DETERMINED BY SPECIALIST CONTRACTOR.

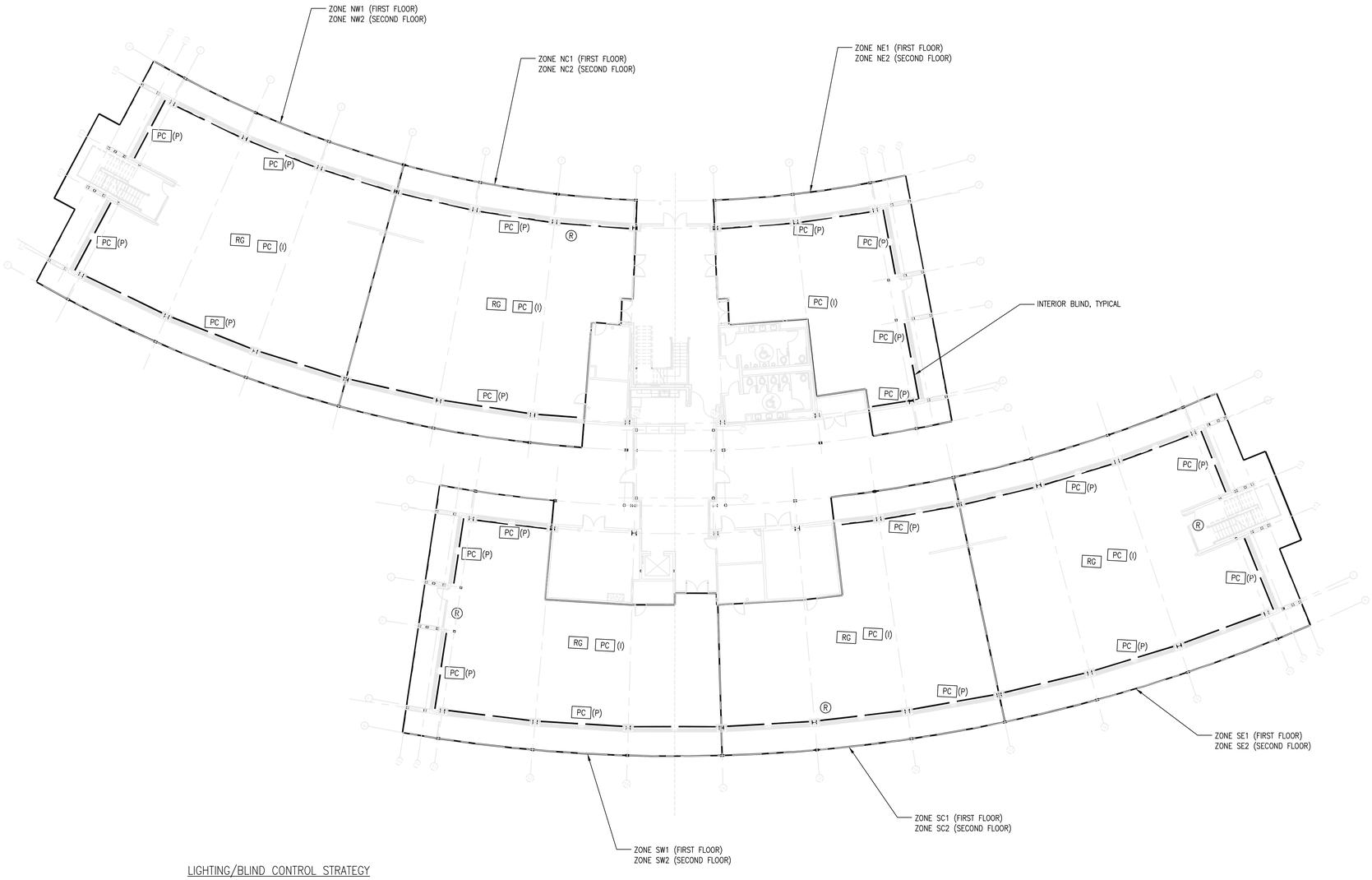

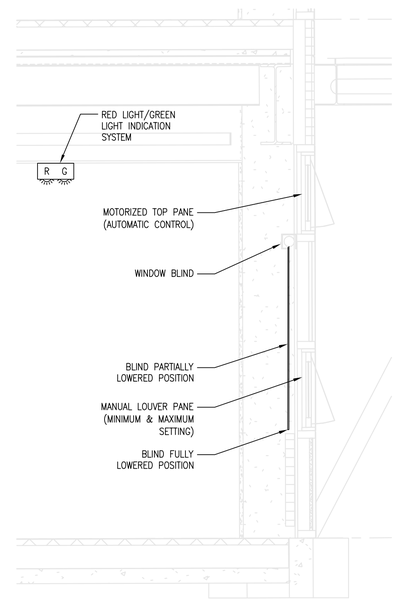

2 | TYPICAL ELEVATION

M502 | REF. SCALE: NO SCALE

LIGHTING/BLIND CONTROL STRATEGY

SYSTEM	LIGHTING LEVEL			
	FC<25	25<FC<50	50<FC<100	FC>100
CEILING LIGHTING	AUTOMATIC DIMMING ON PHOTOCELLS TO MAINTAIN 25 FC	OFF	OFF	OFF
AUTOMATIC WINDOW BLINDS	RAISED	RAISED	LOWER 50% OVER FIXED PANE	FULLY LOWERED
TASK LIGHTING	MANUAL CONTROL BY OCCUPANTS (INDEPENDENT OF FC)			
WINDOW POSITION	OPEN OR CLOSED, CONTROLLED INDEPENDENTLY BY TEMPERATURE			RED LIGHT CLOSE WINDOWS

PROJECT STATUS

BID SET 04/30/09

ISSUE			
MARK	DATE	DESCRIPTION	INITIAL

KEY PLAN

NORTH ARROW

BLDG NORTH / TRUE NORTH

1/16"=1' 0 8 16 32 48

		DATE
DRAWN	J HO	
DESIGNED	M CALLAHAN	
CHECKED	S PAINTER	
PROJMGR	J GRANT	
REQUESTOR	R SCHULER	
R&GA		
SAFETY		
SUPERVISOR	S FRANKEL	

Ames Research Center
Moffet Field, California

N232 COLLABORATIVE SUPPORT FACILITY
HVAC CONTROL DIAGRAMS
BLINDS & LIGHTING

SIZE	CAGE CODE		REV
D	25307	A232-0800- M502	
SCALE 1/16" = 1'-0"	INDEX	SHEET OF	

DWG: R:\232\N232 Collaborative Support Facility\500_CAD\CAD\Drawings\M502.dwg User: jjho
DATE: Apr 30, 2009, 12:15 pm
Xrefs: XMFP01" "XAFP01" "XBGR-SHORT" "XABS01" "XAFP01-SPACEPLAN-N232_S09_CENTRAL-rvt-1-Level1Export

ROOFTOP HEAT PUMPS (DOAS & AHU-1)

MARK	MFR & MODEL NO.	SERVICE	LOCATION	OSA	ASHRAE MIN OSA CFM	SUPPLY FAN CFM	SUPPLY FAN CFM MIN	SUPPLY FAN FSP "WG	SUPPLY FAN ESP "WG	SUPPLY FAN RPM	SUPPLY FAN BHP	SUPPLY FAN MHP	SUPPLY FAN VFD	RELIEF FAN CFM	RELIEF FAN FSP "WG	RELIEF FAN ESP "WG	RELIEF FAN RPM	RELIEF FAN BHP	RELIEF FAN MHP	RELIEF FAN VFD	DX COIL MAX FV FPM	DX COIL APD "WG	DX COIL ROWS	OPER EER
MAU 1	AAON RN-016	NORTH WING	ROOF NORTH WING	100%	2,200	3,900	1,100	2.3"	0.5"	1,100	2.2	3	YES	2,900	1.7"	0.8"	1,300	1.2"	2	YES	200	0.17"	6	17.7
MAU 2	AAON RN-016	SOUTH WING	ROOF SOUTH WING	100%	2,400	4,800	1,300	2.6"	0.5"	1,500	3.1	5	YES	4,600	2.3"	1.0"	1,500	2.5	3	YES	250	0.22"	6	16.6
AHU 1	AAON RN-010	CONFERENCE	ROOF NORTH WING	71%	1,700	2,100	300	2.9"	1.3"	1,500	1.9	3	YES	1,300	0.9"	0.3"	1,000	0.3	1	YES	200	0.12"	6	18.9

MARK	COOLING PERFORMANCE: ENERGY RECOVERY MBH	ENERGY RECOVERY EDB °F	ENERGY RECOVERY EWB °F	ENERGY RECOVERY LDB °F	ENERGY RECOVERY LWB °F	ENERGY RECOVERY APD "WG	MIXING BOX LDB °F	MIXING BOX LWB °F	DX COOLING MBH	DX COOLING EDB °F	DX COOLING EWB °F	DX COOLING LDB °F	DX COOLING LWB °F	DX COOLING LDP °F	DX COOLING EWT °F	DX COOLING LWT °F	DX COOLING GPM	DX COOLING WPD "WG	DX COOLING PIPE SIZE	DX COOLING CD SIZE	REHEAT MBH	REHEAT LDB °F	REHEAT APD "WG
MAU 1	25.4	85.3°	70.5°	83.6°	68.8°	0.85"	83.6°	68.8°	211	83.6°	68.8°	50.1°	50.0°	50.1°	65°	81.5°	30	4.9'	2½"	1"	63	65.0°	0.02"
MAU 2	37.5	85.3°	70.5°	83.2°	68.5°	1.04"	83.2°	68.5°	220	83.2°	68.5°	53.1°	53.0°	53.1°	65°	82.2°	30	4.9'	2½"	1"	62	65.0°	0.03"
AHU 1	16.5	85.3°	70.5°	81.3°	67.9°	0.78"	80.1°	67.0°	129	80.1°	67.0°	44.2°	44.2°	44.2°	65°	76.9°	25	4.9'	2"	1"	0	46.6°	0.01"

MARK	HEATING PERFORMANCE: ENERGY RECOVERY SENS MBH	ENERGY RECOVERY EDB °F	ENERGY RECOVERY LDB °F	DX HEATING MBH	DX HEATING COP	DX HEATING EDB °F	DX HEATING LDB °F	OSA FILTER TYPE	OSA FILTER MIN EFF	OSA FILTER INIT APD	OSA FILTER FINAL APD	FINAL FILTER TYPE	FINAL FILTER MERV	FINAL FILTER INIT APD	FINAL FILTER FINAL APD	UNIT ELECTRICAL VOLTAGE/PHASE/HZ	FLA	MCA	MOCP	OPER WGT LBS	UNIT DIMENSIONS (MAX) LENGTH x WIDTH x HEIGHT	REMARKS
MAU 1	74	36.3°	53.8°	64	3.5	53.8°	69.0°	METAL MESH	10%	0.01"	0.1"	4" PLEATED	13	0.04"	0.6"	460 / 3ø / 60	34	37	45	3,000	158" x 78" x 58"	1 2
MAU 2	109	36.3°	57.4	60	3.5	57.4	69.0°	METAL MESH	10%	0.01"	0.1"	4" PLEATED	13	0.06"	0.6"	460 / 3ø / 60	38	41	50	3,000	158" x 78" x 58"	1 2
AHU 1	37	36.3°	51.4°	45	3.5	55.9°	80.0°	METAL MESH	10%	0.01"	0.1"	4" PLEATED	13	0.02"	0.6"	460 / 3ø / 60	23	25	30	2,600	158" x 78" x 58"	1 2

NOTES
1. EACH UNIT INCLUDES ENERGY RECOVERY WHEEL. OUTSIDE AIR (SUMMER): 85.3°F EDB, 70.5°F EWB OUTSIDE AIR (WINTER): 36.3°F EDB
2. VARIABLE FREQUENCY DRIVE (VFD): COMPATIBLE WITH SEIMENS CONTROLS SYSTEM, FUSED DISCONNECT SWITCH, MANUAL BYPASS, NEMA 1 ENCLOSURE.

AIR OUTLETS AND INLETS

MARK	MFR & MODEL NO.	DESCRIPTION	NECK SIZE	CFM	MAX NECK FPM	MAX NC	APD "WG	DAMPER	REMARKS
S1 –	TITUS TAF-R	ACCESS FLOOR DIFFUSER 1	8"ø	0-70	NA	10	0.05"	NONE	2 3 4 5
E1 –	TITUS 50-F	EGGCRATE EXHAUST GRILLE	6	6	NA	20	0.06"	OBD	2 3 4 5 1/2"x1/2"x1/2" ALUMINUM GRID
R1 –	TITUS 23-RL	CEILING/SIDEWALL GRILLE	6	6	NA	25	0.10"	OBD	2 3 5
S2 –	TITUS 271-FL	CEILING TRANSFER AIR GRILLE	14"x14"	6	NA	25	0.016"	NONE	2 5 1-WAY BLOW

NOTES
1. ACCESS FLOOR DIFFUSER: VERTICAL THROW, HIGH IMPACT POLYMERIC, REMOVABLE CURVED SLOT, FLOW REGULATOR.
2. MATCH FRAME TYPE, BORDER TYPE, AND PANEL SIZES WITH CEILING TYPE. COORDINATE WITH ARCHITECTURAL CEILING PLAN.
3. BRANCH DUCT SIZE IS SAME AS NECK SIZE, UON ON PLANS. PROVIDE DUCT TRANSITION WHERE NOTED DUCT SIZE DIFFERS FROM NECK SIZE.
4. ALL CEILING SUPPLY AIR OUTLETS HAVE 4-WAY BLOW PATTERN, UON.
5. PROVIDE STANDARD WHITE COLOR FOR FINISH SURFACES, UON ON ARCHITECTURAL PLANS. PROVIDE MATTE BLACK FINISH ON INTERIOR SURFACES.
6. SEE PLAN FOR CFM, NECK SIZE

EXHAUST FANS

MARK	MFR & MODEL NO.	SERVICE	LOCATION	TYPE	WHEEL	CFM	FSP "WG	BHP	RPM	DRIVE	SONES	OV FPM	MOTOR HP	MOTOR WATT	MOTOR RPM	MOTOR VOLTAGE/PHASE/HZ	MOTOR VFD	OPER WGT LBS	DIMENSIONS W x L x H	MOUNTING DETAIL	REMARKS
TEF 1	GREENHECK CUBE-131-3	TOILET ROOMS & LUNCH ROOMS	ROOF NORTH WING	UP-BLAST	BI	1,550	0.50"	0.31	1360	BELT	13.5	–	1/3	–	1725	115 / 1ø / 60	NO	70	–	2/M405	1
EF 1	GREENHECK LB-42-7	ATRIUM SOUTH LOBBY	ROOF SOUTH LOBBY	ROOF HOOD	BI	8,000	0.37"	0.84	290	BELT	6.6	–	3/4	–	1725	460 / 3ø / 60	YES	400	–	7/M405	1 3
EF 2	GREENHECK QEI-18-1	MAIN ELECTRIC RM SOUTH WING	ELEC ROOM 114 SOUTH WING	TUBULAR	MIXED	5,000	0.50"	0.88	1290	BELT	14.0	–	1	–	1725	460 / 3ø / 60	YES	260	–	2/M405	2 4
EF 3	GREENHECK CUBE-131-3	MER	ROOF SOUTH WING	UP-BLAST	BI	1,600	0.50"	0.32	1410	BELT	14.0	–	1/3	–	1725	115 / 1ø / 60	NO	70	–	2/M405	1
EF 4	GREENHECK CUBE-161-3	ELECTRIC 107/207 NORTH WING	ROOF NORTH WING	UP-BLAST	BI	1,800	0.50"	0.27	910	BELT	10.0	–	1/3	–	1725	115 / 1ø / 60	YES	90	–	2/M405	1
EF 5	GREENHECK CUE-75-D	ELECTRIC 215	ROOF SOUTH WING	UP-BLAST	BI	350	0.12"	0.04	1550	DIRECT	5.2	–	1/25	–	1550	115 / 1ø / 60	NO	30	–	2/M405	1
EF 6	GREENHECK CUE-70-G	JANITOR 116/211	ROOF SOUTH WING	UP-BLAST	BI	200	0.12"	0.01	1113	DIRECT	1.9	–	1/60	–	1113	115 / 1ø / 60	NO	30	–	2/M405	1

NOTES
1. PROVIDE ELECTRICAL SAFETY DISCONNECT SWITCH, BACKDRAFT DAMPER, AND ALUMINUM BIRD SCREEN
2. PROVIDE ELECTRICAL SAFETY DISCONNECT SWITCH, BACKDRAFT DAMPER, AND SPRING ISOLATION HANGERS
3. VARIABLE FREQUENCY DRIVE (VFD): COMPATIBLE WITH SEIMENS CONTROLS SYSTEM, FUSED DISCONNECT SWITCH, MANUAL BYPASS, NEMA 1 ENCLOSURE.
4. PROVIDE TWO-SPEED MOTOR

HOT WATER RADIANT HEATING PANELS

MARK	MFR & MODEL NO.	SERVICE	TUBES	GPM	WPD "WG	EWT °F	PIPE SIZE	OUTPUT BTUH/LF	RATED PSI	DIMENSIONS HEIGHT x DEPTH	WET WEIGHT LBS/LF	REMARKS
H 1	RUNTAL RF-7	SECOND FLOOR PERIMETER HEATING	7	0.20	0.10'	110°	1/2"	2,150	120°	20.2" x 1.6"	17.3	1 2
H 2	RUNTAL RF-9	FIRST FLOOR PERIMETER HEATING	9	0.20	0.10'	110°	1/2"	2,530	120°	26.0" x 1.6"	22.0	1 2

NOTES
1. PANEL LENGTH: 2" LESS THAN OVERALL CURTAIL WALL DIMENSION. REFER TO DETAIL 2/A802.
2. PANEL MOUNTING HEIGHT: 1" BELOW SILL. REFER TO DETAIL 3/A802. PANEL HANGERS MUST ONLY BE SECURED TO ANCHOR POINTS PROVIDED BY CURTAIL WALL FRAMING.

CEILING RADIANT COOLING PANELS

MARK	MFR & MODEL NO.	SERVICE	TUBE SPACING	TUBE SIZE	RATED DELTA-T °F	RATED BTUH/ SQ FT	GPM/ SQ FT	MAX WPD "WG	EWT °F	LWT °F	PANEL WEIGHT LBS/SF	OPER WEIGHT LBS/SF	REMARKS
CRCP LXW	PRICE RPL	SPACE COOLING	6"	1/2"	18° 2	25.1	0.01	40'	60°	65°	2.0	2.7	1 3

NOTES
1. PANEL DIMENSIONS ARE LISTED ON THE MARK. FIRST DIMENSION IS THE LENGTH IN FEET. SECOND DIMENSION IS THE WIDTH IN FEET.
2. DELTA-T IS DEFINED AS THE TEMPERATURE DIFFERENCE BETWEEN THE AVERAGE ROOM GLOBE TEMPERATURE, AND THE AVERAGE WATER TEMPERATURE.
3. SELECT PANEL CIRCUITING TO LIMIT WATER PRESSURE DROP IN PANEL TO 30 FT WG.

RADIANT FLOOR SLABS

MARK	SLAB LOCATION	SERVICE	TUBE SIZE	TUBE SPACING	MANIFOLD CIRCUITS	CIRCUIT LENGTH	MANIFOLD SIZE	PUMP	HEATING GPM	HEATING EWT	COOLING GPM	COOLING EWT	COOLING WPD	REMARKS
RFS 1	CONNECTING LINK	HEAT & COOL	3/4"	9"	TWO	250' EA	1-1/4"	RSP 1	1.9	110°F	9.0	60°F	22'	1
RFS 2	LOBBY INTERIOR	COOL	3/4"	12"	THREE	350' EA	1"	NONE	NA	NA	4.9	60°F	21'	1
RFS 3	LOBBY NORTH ENTRY	HEAT & COOL	3/4"	9"	SIX	240' EA	3/4"	RSP 3	0.2	110°F	2.8	60°F	8'	1

NOTES
1. TUBE DEPTH: CENTERLINE 4" BELOW TOP OF SLAB.

PROJECT STATUS

BID SET 04/30/09

ISSUE	MARK	DATE	DESCRIPTION	INITIAL

		DATE
DRAWN	J HO	
DESIGNED	M CALLAHAN	
CHECKED	S PAINTER	
PROJMGR	J GRANT	
REQUESTOR	R SCHULER	
R&QA		
SAFETY		
SUPERVISOR	S FRANKEL	

Ames Research Center
Moffet Field, California

N232 COLLABORATIVE SUPPORT FACILITY
MECHANICAL
EQUIPMENT SCHEDULES

SIZE	CAGE CODE		REV
D	25307	A232-0800- M601	
SCALE		INDEX	SHEET OF

DWG: R:\A232\W232 Collaborative Support Facility\500_CAD\CAD\Drawings\M601.dwg User: jjlho
DATE: Apr 30, 2009 - 1:20:59 pm images:
Xrefs: 7NBDR-SHORT

GEOTHERMAL LOOP HEAT PUMPS (WATER-TO-WATER)

MARK	MFR & MODEL NO.	LOCATION	SERVICE	NOMINAL CAPACITY TONS	RATED COOLING			RATED HEATING			REFRIGERANT		LOAD HEAT EXCHANGER				SOURCE HEAT EXCHANGER				OPERATING EFFICIENCY		COMPRESSORS			UNIT ELECTRICAL				UNIT DIMENSIONS (MAX) LENGTH x WIDTH x HEIGHT	OPER WGT LBS	REMARKS
					TCC MBH	GPM	EER	THC MBH	GPM	COP	TYPE	CHARGE LBS	GPM	EWT °F	LWT °F	WPD "WG	GPM	EWT °F	LWT °F	WPD "WG	EER	COP	QTY	RLA	LRA	VOLTS/PHASE/HZ	FLA	MCA	MOCP			
HP 1	WATER FURNACE EW360	MER	CHILLED WATER	30	351	86	15.4	296	86	3.0	R410a	26.0	90	63°	70.5°	10.3'	70	90°	102°	9.4'	14.7	4.8	2	23.7	425.0	460 / 3ø / 60	47.4	53.3	70	50" x 24" x 65"	1,300	1 2 3 4
HP 2	WATER FURNACE EW360	MER	CHILLED WATER	30	351	86	15.4	296	86	3.0	R410a	26.0	90	63°	70.5°	10.3'	70	90°	102°	9.4'	14.7	4.8	2	23.7	425.0	460 / 3ø / 60	47.4	53.3	70	50" x 24" x 65"	1,300	1 2 3 4
HP 3	WATER FURNACE EW360	MER	CHILLED WATER	30	351	86	15.4	296	86	3.0	R410a	26.0	90	63°	70.5°	10.3'	70	90°	102°	9.4'	14.7	4.8	2	23.7	425.0	460 / 3ø / 60	47.4	53.3	70	50" x 24" x 65"	1,300	1 2 3 4
HP 4	WATER FURNACE EW360	MER	HEATING WATER	30	351	86	15.4	296	86	3.0	R410a	26.0	90	100°	108.6°	10.3'	70	60°	41.8°	9.4'	14.7	4.8	2	23.7	425.0	460 / 3ø / 60	47.4	53.3	70	50" x 24" x 65"	1,300	1 2 3 4

NOTES:

1. RATED COOLING EER SHALL BE CERTIFIED PER ARI/ASHRAE/ISO 13256-2 AT FULL LOAD (LOAD EWT=53.6°F, SOURCE EWT=77.0°F)
2. RATED HEATING COP SHALL BE CERTIFIED PER ARI/ASHRAE/ISO 13256-2 AT FULL LOAD (LOAD EWT=104°F, SOURCE EWT=32.0°F)
3. PROVIDE FACTORY ACOUSTICAL ATTENUATION JACKET TO REDUCE THE A-WEIGHTED SOUND PRESSURE LEVEL TO 70 dBA MAX. PER ARI STANDARD 575 94.
4. FACTORY INSTALLED CONTROL MODULE, FULL THERMAL INSULATION, REFRIGERANT ISOLATION VALVE AND LIQUID BALL VALVE.

AIR CONDITIONING UNITS

MARK	MFR & MODEL NO.	SERVICE	TYPE	SUPPLY FANS (BLOWERS)					DX COOLING COIL (MAX FV=450 FPM)										FILTERS	HUMIDIFIER			REHEAT		INDOOR UNIT ELECTRICAL POWER				UNIT DIMENSIONS L" x W" x H"	UNIT WEIGHT LBS	REMOTE CONDENSING UNIT (OUTDOOR)										REMARKS
				CFM	OSA	ESP	FANS	MHP	EDB °F	EWB °F	LDB °F	AMB °F	TCC MBH	ROWS	RL OD	HG OD	RS OD	CD OD	NO./ SIZE	KW	LB/HR	DCW CONN	TYPE	KW	VOLTS/PHASE	FLA	MCA	MOCP			CFM	COMPRESSOR RLA	COMPRESSOR LRA	FAN MHP	VOLTS/PHASE	MCA	MOCP	DIMENSIONS L" x W" x H"	WEIGHT LBS	MFR & MODEL NO.	
DAC 1	CARRIER 40MVC009 OR EQUAL	ELEVATOR MACHINE ROOM	DUCTLESS WALL MOUNT	325	NONE	NA	ONE	0.034	90°	62°	58°	95°	11.6	2	¼"	–	⅜"	0.65"	–	NONE	–	–	NONE	–	115V / 1ø	1.10	NA	NA	33" x 8" x 12"	18	1,000	7.5	40.0	0.102	115V / 1ø	12	20	31" x 12" x 22"	70.4	CARRIER 38MVC009 OR EQUAL	1 2 PIPE CD TO FLOOR SINK IN MER WITH AIR BREAK.
DAC 2	CARRIER 40MVC018 OR EQUAL	COMM 108	DUCTLESS WALL MOUNT	630	NONE	NA	ONE	0.075	77°	62°	58°	105°	15.5	2	¼"	–	½"	0.65"	–	NONE	–	–	NONE	–	208V / 1ø	0.26	NA	NA	50" x 10" x 13"	40	1,600	7.3	32.6	0.224	208V / 1ø	11	20	34" x 15" x 28"	116.6	CARRIER 38MVC018 OR EQUAL	1 2 3 PIPE CD TO BAR SINK TAILPIECE IN LUNCH ROOM
DAC 3	CARRIER 40MVC018 OR EQUAL	TEL/DATA 113	DUCTLESS WALL MOUNT	630	NONE	NA	ONE	0.075	77°	62°	58°	105°	15.5	2	¼"	–	½"	0.65"	–	NONE	–	–	NONE	–	208V / 1ø	0.26	NA	NA	50" x 10" x 13"	40	1,600	7.3	32.6	0.224	208V / 1ø	11	20	34" x 15" x 28"	116.6	CARRIER 38MVC018 OR EQUAL	1 2 3 PIPE CD TO MOP SINK IN JANITOR WITH AIR BREAK

NOTES:

1. POWER FOR TOTAL UNIT IS A SINGLE POINT CONNECTION AT OUTDOOR UNIT.
2. DUCTLESS INDOOR UNITS ARE LOCATED IN ROOM SERVED. OUTDOOR UNITS ARE LOCATED ON ROOF.
3. SELECTION BASED ON EQUIPMENT LOAD ESTIMATE BY NASA.

PUMPS

MARK	MFR & MODEL NO.	LOCATION	SERVICE	TYPE	GPM	TDH "WG	MAX NPSHR "WG	EWT °F	FLUID SG	RATED °F	RATED PSIG	INLETxOUTLET SIZE	BHP	MOTOR HP	MOTOR RPM	MOTOR VOLTAGE/PHASE/HZ	MOTOR VFD	OPER WGT LBS	HANGER ROD SIZE	REMARKS
GWP 1, GWP 2	B&G SERIES 90 2AA	MER	GEOTHERMAL WATER	IN-LINE	105	80'	12.0'	50°	1.0	225°	175	2" x 2"	3.5	5	3,450	460 / 3ø / 60	YES	170	⅜"ø	1 2
CHP 1, CHP 2	B&G SERIES 80 3x3x7B	MER	CHILLED WATER (60°F)	IN-LINE	235	125'	9.2'	65°	1.0	225°	175	3" x 3"	10.7	15	3,525	460 / 3ø / 60	YES	610	⅜"ø	1 2
HWP 1, HWP 2	B&G SERIES 80 1-1/2x1-1/2x7B	MER	HEATING WATER	IN-LINE	30	30'	3.6'	110°	1.0	225°	175	1½" x 1½"	0.62	1	1,750	460 / 3ø / 60	YES	200	⅜"ø	1 2
HPP 1, HPP 2, HPP 3, HPP 4	B&G SERIES 60 2x2x5-1/4	MER	HEAT PUMP PRIMARY	IN-LINE	90	35'	6.3'	60'-110'	1.0	225°	175	2" x 2"	0.68	1	1,750	460 / 3ø / 60	NO	80	–	1
HPP 5	B&G SERIES 60 2x2x5-1/4	MER	HEAT PUMP TRANSFER	IN-LINE	90	20'	6.3'	50°	1.0	225°	175	2" x 2"	0.68	1	1,750	460 / 3ø / 60	NO	80	–	1
RSP 1	B&G BOOSTER PL-36	MER	SOUTH LOBBY SLAB	IN-LINE	9	30'	–	60'-110'	1.0	225°	150	1½" x 1¼"	–	1/6	3,300	115 / 1ø / 60	NO	15	–	1 4
RSP 3	B&G BOOSTER PL-36	MEN 105	NORTH LOBBY SLAB	IN-LINE	3	20'	–	60'-110'	1.0	225°	150	¾" x ¾"	–	1/6	3,300	115 / 1ø / 60	NO	15	–	1 4
CHP 3	B&G BOOSTER PL-45 VS	MAU-1	SOURCE WATER	IN-LINE	30	10'	–	65°	1.0	225°	150	1½" x 1½"	–	1/6	3,500	115 / 1ø / 60	YES	15	–	1 2 3 5
CHP 4	B&G BOOSTER PL-45 VS	MAU-2	SOURCE WATER	IN-LINE	30	10'	–	65°	1.0	225°	150	1½" x 1½"	–	1/6	3,500	115 / 1ø / 60	YES	15	–	1 2 3 5
CHP 5	B&G BOOSTER PL-45 VS	AHU-1	SOURCE WATER	IN-LINE	25	15'	–	65°	1.0	225°	150	1½" x 1½"	–	1/6	3,500	115 / 1ø / 60	YES	15	–	1 2 3 5

NOTES:

1. ACCEPTABLE PUMP MANUFACTURERS: BELL & GOSSETT, TACO, GRUNDFOS, PACO, OR APPROVED EQUAL.
2. VARIABLE FREQUENCY DRIVE (VFD): COMPATIBLE WITH SEIMENS CONTROLS SYSTEM, FUSED DISCONNECT SWITCH, MANUAL BYPASS, NEMA 1 ENCLOSURE.
3. FACTORY MOUNTED VFD ON UNIT
4. SEE RADIANT SLAB SCHEDULE FOR PUMP OPERATING GPM
5. MOUNT INSIDE ROOF TOP UNIT CABINET WITH WATER COOLED SOURCE HEAT EXCHANGER

EXPANSION TANKS

MARK	MFR & MODEL NO.	LOCATION	SERVICE	TYPE	MIN OPER PSIG	MAX OPER PSIG	MIN ACCEPTANCE GAL	MIN TANK GAL	DIMENSIONS DIA x HEIGHT	DRY WGT LBS	OPER WGT LBS	REMARKS
ET 1	B&G B-200	MER	HEATING WATER	BLADDER	21	111	23	32	24"ø x 39"	192	634	1
ET 2	B&G B-300	MER	CHILLED WATER	BLADDER	21	95	45	65	24"ø x 53"	238	897	1

NOTES:

1. PROVIDE AIR SEPARATOR.

PROJECT STATUS

BID SET 04/30/09

MARK	DATE	DESCRIPTION	INITIAL

		DATE
DRAWN	J HO	
DESIGNED	M CALLAHAN	
CHECKED	S PAINTER	
PROJMGR	J GRANT	
REQUESTOR	R SCHULER	
R&QA		
SAFETY		
SUPERVISOR	S FRANKEL	

Ames Research Center
Moffet Field, California

N232 COLLABORATIVE SUPPORT FACILITY
MECHANICAL
EQUIPMENT SCHEDULES

SIZE	CAGE CODE		REV
D	25307	A232-0800- M602	
SCALE		INDEX	SHEET OF

DWG: R:\A232\N232 Collaborative Support Facility\500_CAD\CAD\Drawings\M602.dwg User: jjho
DATE: Apr 30, 2009 - 1:20:03 pm images:
Xrefs: ?ABIR-SHORT