2\ coo projects\ 14x22 \Air Stations\ AS 3

P & ID SYMBOL LEGEND

- DIAPHRAGM ACTUATED GLOBE VALVE, FLANGED END CONN.
- PRESSURE REDUCING VALVE
- PRESSURE REDUCING VALVE W/ HANDWHEEL ADJUSTABLE SETPOINT
- PNEUMATIC PISTON ACTUATED GLOBE VALVE
- 3-WAY SOLENOID ACTUATED VALVE
- MOTOR OPERATED GLOBE VALVE, FLANGED END CONN.
- MANUAL GLOBE VALVE, FLANGED END CONN.
- MANUAL GLOBE VALVE
- MANUAL ISOLATION VALVE
- RELIEF VALVE
- FILTER
- VENTURI FLOW METER
- VENT
- CONNECTION
- HEATER
- ELECTRIC SIGNAL
- PNEUMATIC SIGNAL
- FLANGED CONNECTION ANSI CLASS OR GRAYLOC
- REDUCER
- LIMIT SWITCH OPEN
- LIMIT SWITCH CLOSED
- 4-20 MA TO PNEUMATIC SIGNAL CONVERTER
- 0-5V DC TO PNEUMATIC SIGNAL CONVERTER
- DIFFERENTIAL PRESSURE TRANSMITTER
- DIFFERENTIAL PRESSURE SWITCH
- TEMPERATURE TRANSMITTER
- PRESSURE TRANSMITTER
- PRESSURE INDICATOR

SYSTEM DESIGN PERFORMANCE REQUIREMENTS

SYSTEM DESIGN PRESSURE:	5500 PSIG
SYSTEM DESIGN TEMPERATURE:	200°F
HIGH FLOW LEG REQUIREMENTS:	30 LBM/SEC TO 12 LBM/SEC @ 5000 PSIG TO 1800 PSIG
LOW FLOW LEG REQUIREMENTS:	12 LBM/SEC TO 2 LBM/SEC @ 1800 PSIG TO 100 PSIG

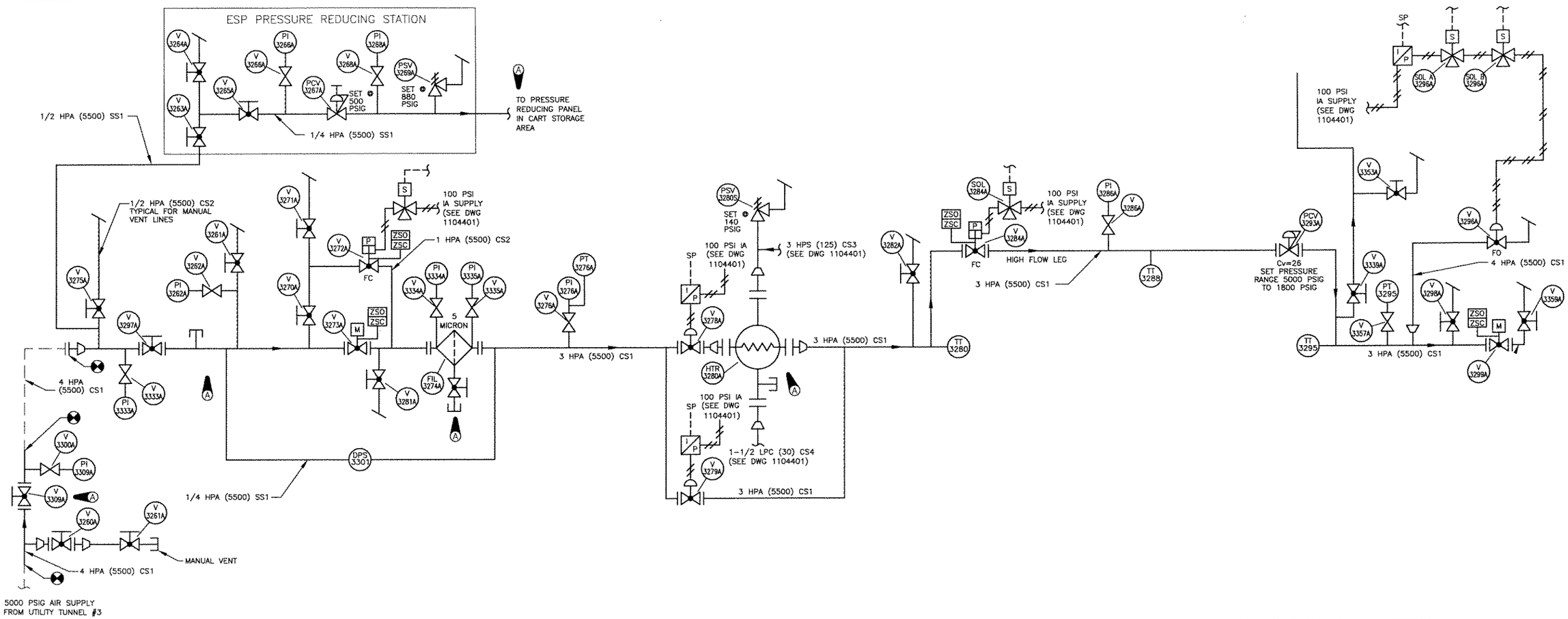

REVISIONS								REVISIONS							
DATE	LTR	FREQ	DESCRIPTION	BY	CHECK	APPD		DATE	LTR	FREQ	DESCRIPTION	BY	CHECK	APPD	

LANGLEY RESEARCH CENTER

APPROVALS			
NAME	ORGANIZATION	DATE	DATE
		DRAWN	
		DESIGNED	
		CHECKED	
		APPROVED	
		TECH PROJ ENG	
		RES PROJ ENG	

TOLERANCE ON DIMENSIONS UNLESS SHOWN OTHERWISE: ANGULAR ± 5°; X.XX (2 DECIMAL PLACES) ±.05; X.XXX (3 DECIMAL PLACES) ±.005

SURFACE FINISH IN MICROINCHES UNLESS OTHERWISE SHOWN: XX

NATIONAL AERONAUTICS & SPACE ADMINISTRATION
LANGLEY RESEARCH CENTER
HAMPTON, VIRGINIA 23681-0001

PROJECT TITLE	PROTOTYPE PROTOTYPE
DRAWING TITLE	XXXX XXXX
BUILDING NO.	XXXX
SHEET NO.	XXXX
SIZE	D
DRAWING NO.	XXXXXX