LTR	ZONE	REVISION	DATE	APPROVAL
J	ALL	1. COMPLETE REVISION TO CAD/CAM	4-8-91	J. JOHNSON
			4-12-91	W. HOFFMAN
			4-19-91	E. JOHNSON
			4-19-91	L. BENNETT
			4-19-91	C. MILLER
	A6	2. DELETED GENERAL NOTE 2	4-22-91	B. WITTSCHEN
K	C4	1. ADDED COLUMN HEIGHT REFERENCES	ENG	
			APP	
			QE	1-30-95
	B3	2. REVISED PART NUMBER FOR ITEM 10	MATL	4-30-95
			STRESS	1/30/95
	A1	3. REVISED DRAWING TITLE	AUTH	9/29/95

RELEASED

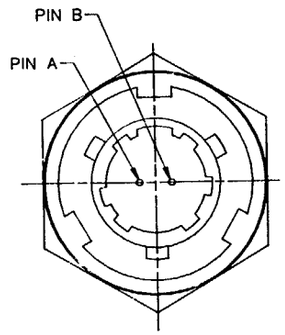

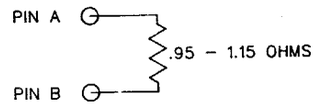

CIRCUIT DIAGRAM

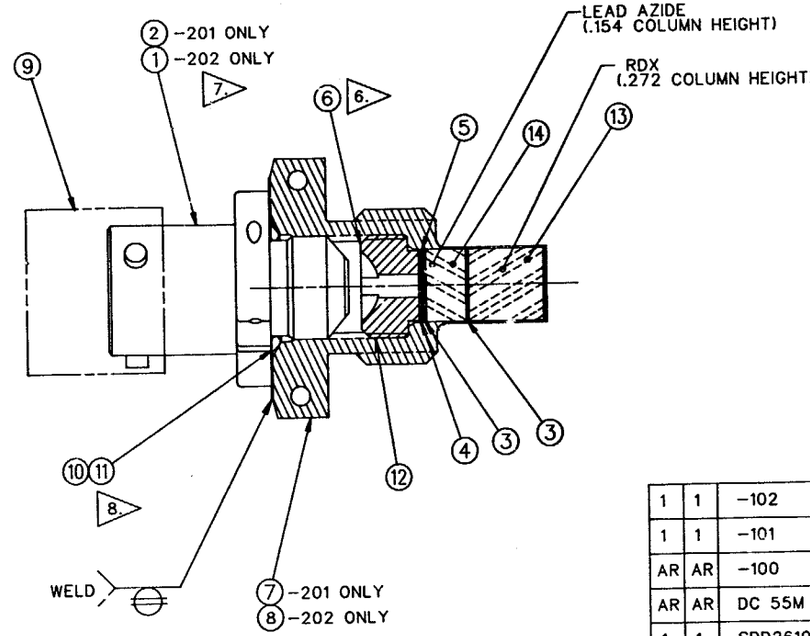

DETONATOR ASSEMBLY

–201 RH THREAD
–202 LH THREAD

1	1	–102 4. 5.	TRANSFER CHARGE	LEAD AZIDE 376 ±5 MG	MIL–L–3055 TYPE I		14
1	1	–101 3. 5.	OUTPUT CHARGE	RDX–UNRECLAIMED(VIRGIN) GFE–400 ±5 MG	MIL–R–398 TYPE II CLASS 7		13
AR	AR	–100	SEALANT	EA 901/B1			12
AR	AR	DC 55M	LUBRICANT	8.	DOW CORNING		11
1	1	SDD26100095–001	O–RING				10
1	1	SEB26100060–001	FARADAY CAP	2.			9
1		SDB26100093–002	BODY, LH THREAD				8
	1	SDB26100093–001	BODY, RH THREAD				7
1	1	SDB26100092–001	PLUG				6
1	1	SDB26100091–001	SPACER				5
1	1	SDB26100089–002	DISK				4
2	2	SDB26100089–001	DISK				3
—	1	SEB26100001–216	INITIATOR,NSI	1.			2
1	—	SEB26100001–217	INITIATOR,NSI	1.			1
–202	–201	SEB26100094	DETONATOR–NASA STANDARD				
PART NUMBER			DESCRIPTION	MATERIAL	SPECIFICATION		ITEM NO.

8. LUBRICATE O–RING
7. TORQUE TO 125 ±10 INCH–POUNDS
6. TORQUE TO 50 – 60 INCH–POUNDS
5. EXPLOSIVE LOADING MUST BE PERFORMED AT THE SELLERS FACILITY.
4. THE FIRST INCREMENT OF 188 MG OF LEAD AZIDE SHALL BE PRESSED TO 7,500 PSI. THE SECOND INCREMENT OF 188 MG OF LEAD AZIDE SHALL BE PRESSED TO 5,000 PSI.
3. THE FIRST INCREMENT OF 200 MG OF RDX SHALL BE PRESSED TO 15,000 PSI. THE SECOND INCREMENT OF 200 MG OF RDX SHALL BE PRESSED TO 10,000 PSI.
2. SEB26100060 FARADAY CAP/GOVERNMENT FURNISHED EQUIPMENT
1. SEB26100001 INITIATOR/GOVERNMENT FURNISHED NO FIRE 1 AMP, 1 WATT FOR 5 MINUTES

NOTES:

4. THIS PART IS NOT FRACTURE CRITICAL
3. ASSEMBLE AND INSPECT PER SKB26100097
(J) 2. DELETED
1. INTERPRET DRAWING PER DOD–STD–100

NOTES:UNLESS OTHERWISE SPECIFIED

UNLESS OTHERWISE SPECIFIED: DIMENSIONS ARE IN INCHES. TOLERANCES ON: .0 ± .10 .000 ± .005 .00 ± .02 ANGULAR ± 30'

SURFACE FINISH IN MICROINCH RMS UNLESS NOTED OTHERWISE 125

NEXT ASS'Y FINAL

EQUIPMENT TYPE ☒ FLT HDWR ☐ OTHER (SPECIFY) ☐ GSE INSTLLCE TO FLT HDWR

SIGNATURES		DATE
DR	L.G. MASLEY	6-6-16
ENG	J.C. CROWLEY	6-6-80
CH	JC	6-6-80
APP	L. JAMES PRICE	6-9-80
AUTH	R. J. TAEUBER	6-9-80
MATL	M. STEINTHAL	6-17-90
QE		
STRESS		
	S. HOOPER	6-6-80

NATIONAL AERONAUTICS & SPACE ADMINISTRATION
LYNDON B. JOHNSON SPACE CENTER HOUSTON, TEXAS

DETONATOR ASSEMBLY - NASA STANDARD

CODE IDENT NO. 21356 | SIZE D | DWG NO. SEB26100094 | REV. K

SCALE 4/1 | PPD EPS | SHEET 1 OF 1

036