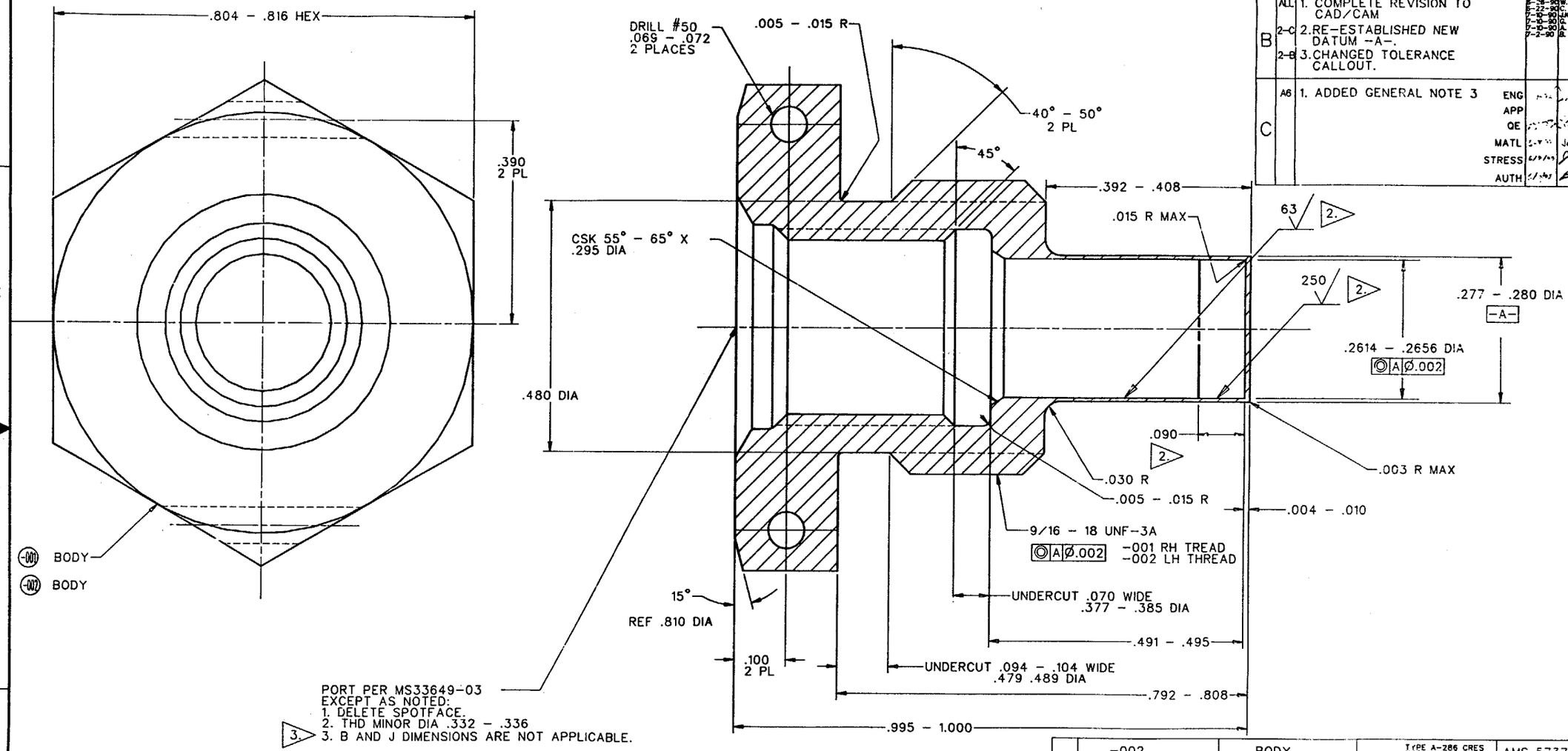

LTR	ZONE	REVISION	DATE	APPROVAL
A	A-2	1. CHANGED NEXT ASSY FROM SED TO SEB	6-1-81	R. J. TAEUBER
	A-3	2. ADDED NOTE 2		J.W. SMITH
B	ALL	1. COMPLETE REVISION TO CAD/CAM	6-26-90	W. HOFFMAN
	2-C	2. RE-ESTABLISHED NEW DATUM -A-.	6-22-90	C. HOHMANN
	2-B	3. CHANGED TOLERANCE CALLOUT.	7-10-90	J.K. EVANS
			7-10-90	G. ECORD
			7-10-90	A. LEVINE
			7-2-90	B. WITTSCHEN
C	A6	1. ADDED GENERAL NOTE 3		

ENG
APP
QE
MATL
STRESS
AUTH

PORT PER MS33649-03
EXCEPT AS NOTED:
1. DELETE SPOTFACE.
2. THD MINOR DIA .332 - .336
3. B AND J DIMENSIONS ARE NOT APPLICABLE.

3. FULL THREAD TO INNER THREAD RELIEF.

2. .090 DIMENSION SPECIFIES DISTANCE FOR DIFFERENT SURFACE TEXTURE CALLOUTS ON SAME SURFACE.

1. PASSIVATE PER MIL-S-5002.

NOTES:

C 3. CONDUCT TENSILE TEST ON 3 COUPONS FROM SAME MATERIAL MELT LOT AND HEAT TREATMENT PER AMS5737.

2. FLUORESCENT PENETRANT INSPECT PER MIL-STD-6866. TYPE I METHOD B OR D SENSITIVITY LEVEL 3.

1. FABRICATION TOLERANCES AND PRACTICES PER SKZ36103755.

NOTES:UNLESS OTHERWISE SPECIFIED

PART NUMBER	DESCRIPTION	MATERIAL	SPECIFICATION	ITEM NO.
-002	BODY	TYPE A-286 CRES (140 MIN ULT) 1.0 DIA MIN	AMS 5737	
-001	BODY	TYPE A-286 CRES (140 MIN ULT) 1.0 DIA MIN	AMS 5737	

UNLESS OTHERWISE SPECIFIED: DIMENSIONS ARE IN INCHES. TOLERANCES ON: .0 ± .10 .000 ± .005 .00 ± .02 ANGULAR ± 30'

SURFACE FINISH IN MICROINCH RMS UNLESS NOTED OTHERWISE 125

NEXT ASS'Y SEB26100094

EQUIPMENT TYPE: ☒ FLT HDWR ☐ OTHER (SPECIFY) ☐ CSK WITH L/F TO FLT HDWR

SIGNATURES		DATE
DR	L.G. MANSLEY	
ENG	J.C. CROWLEY	6-6-80
CH	JC	6-6-80
APP	L. JAMES PRICE	6-9-80
AUTH	R. J. TAEUBER	6-9-80
MATL	M. STEINTHAL	6-17-90
QE		
STRESS		

S. HOOPER 6-6-80

NATIONAL AERONAUTICS & SPACE ADMINISTRATION
LYNDON B. JOHNSON SPACE CENTER HOUSTON, TEXAS

BODY- NSD
(NASA STANDARD DETONATOR)

CODE IDENT NO. 21356 | SIZE D | DWG NO. SDB26100093 | REV. C

SCALE 4/1 | PPD EP5 | SHEET 1 OF 1

035