LTR	ZONE	REVISION		DATE	APPROVAL
E	ALL	1. REVISED AND REDRAWN TO CAD/CAM	ENG	[illegible]	[illegible]
	A4	2. DELETED GENERAL NOTE 2	APP	[illegible]	
		3. FOR "WAS" CONDITION SEE REV D	QE	[illegible]	
			MATL		
			STRESS	[illegible]	[illegible]
			AUTH	[illegible]	[illegible]

RELEASED Date [illegible] Rev [illegible] Init [illegible]

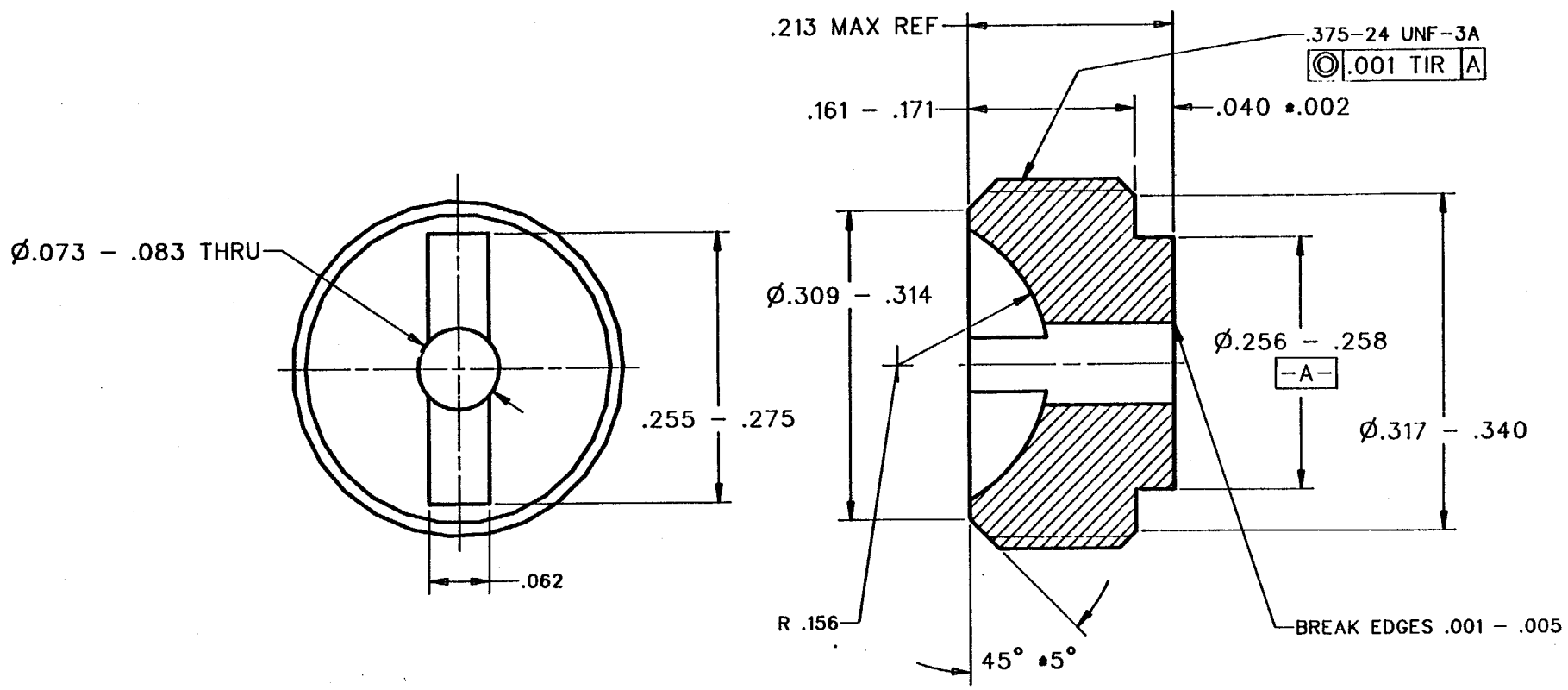

PART NUMBER	DESCRIPTION	MATERIAL	SPECIFICATION	ITEM NO.
-001	PLUG-NSD (NASA STANDARD DETONATOR)	286 CRES STEEL TYPE A BAR	AMS 5737	

UNLESS OTHERWISE SPECIFIED: DIMENSIONS ARE IN INCHES. TOLERANCES ON:
.0 ± .10 .000 ± .010
.00 ± .03 ANGULAR ±30'

SURFACE FINISH IN MICROINCH RMS UNLESS NOTED OTHERWISE 125√

NEXT ASS'Y SEB26100094

EQUIPMENT TYPE
☒ FLT HDWR ☐ OTHER (SPECIFY)
☐ GSE WITH I/F TO FLT HDWR

SIGNATURES		DATE
DR	L.G. MASLEY	12-15-78
ENG	J. CROWLEY	6-6-80
CH	JC	6-6-80
APP	L.J. PRICE	6-17-80
AUTH	R. TAEUBER	6-9-80
MATL	STEINTHAL	6-9-80
QE		
STRESS	S. HOOPER WR11563	6-6-80

NATIONAL AERONAUTICS & SPACE ADMINISTRATION
LYNDON B. JOHNSON SPACE CENTER HOUSTON, TEXAS

PLUG,NSD
(NASA STANDARD DETONATOR)

CODE IDENT NO.	SIZE	DWG NO.	REV.
21356	C	SDB26100092	E

SCALE 4/1 PPD EP5 SHEET 1 OF 1

3. PASSIVATE PER MIL-S-5002
(E) 2. DELETED
1. INTERPRET DRAWING PER DOD-STD-100
NOTES: UNLESS OTHERWISE SPECIFIED