TIRS
Signature Controlled
Document
L. KEARNEY
3/4/09
To verify the correct
version, refer to
https://tirsomis.nasa.gov

TIRS Project

Cryocooler Specification

Effective Date: 02/26/2009

Expiration Date: <<Expiration Date: >>

Goddard Space Flight Center
Greenbelt, Maryland

National Aeronautics and
Space Administration

CHECK THE TIRS MIS AT https://tirsmis.gsfc.nasa.gov
TO VERIFY THAT THIS IS THE CORRECT VERSION PRIOR TO USE.

CM FOREWORD

This document is a TIRS Project controlled document. Changes to this document require prior approval of the TIRS Project CCB Chairperson. Proposed changes shall be submitted to the TIRS Project Configuration Management Office (CMO), along with supportive material justifying the proposed change.

Questions or comments concerning this document should be addressed to:

TIRS Configuration Management Office
Mail Stop 556
Goddard Space Flight Center
Greenbelt, Maryland 20771

Signature Page

Prepared by:

Brian McLaughlin Instrument Systems Engineer SGT Inc	Date

Reviewed by:

Paul Whitehouse TIRS Cryogenics Lead NASA GSFC/Code 552	Date	James Marsh Mechanical Systems Engineer NASA/GSFC Code 543	Date
Rick Mills Electrical Systems Engineer NASA/GSFC Code 565	Date	Liz Matzinger TIRS Structural Analysis Lead NASA GSFC/Code 542	Date
Veronica Otero Thermal Engineer NASA/GSFC Code 545	Date		

Concurred by:

Cathy Richardson TIRS Instrument Manager NASA/GSFC Code 556	Date	Taylor Hale Instrument Systems Engineer SGT Inc	Date
Dennis Reuter Instrument Scientist NASA/GSFC Code 693	Date		

DOCUMENT CHANGE RECORD

REV/ VER LEVEL	DESCRIPTION OF CHANGE	APPROVED BY
Rev-A	Updates per TIRS-CCR-0003	C. Richardson

**CHECK THE TIRS MIS AT https://tirsmis.gsfc.nasa.gov
TO VERIFY THAT THIS IS THE CORRECT VERSION PRIOR TO USE.**

TABLE OF CONTENTS

Page

1.0 Introduction 1-1
1.1 Scope 1-1
1.2 Precedence 1-1
1.3 Applicable and Reference Documents 1-1
1.3.1 Applicable Documents 1-1
1.3.2 Literature References 1-1
2.0 Functional Description 2-1
2.1 Definition of Terms 2-2
2.2 Common Units of Measure 2-4
2.3 Orientation 2-4
2.3.1 TMU Orientation & Coordinates 2-4
2.3.2 CCE Orientation & Coordinates 2-6
3.0 Requirements 3-1
3.1 Performance Requirements 3-1
3.1.1 Cooling Performance 3-1
3.1.2 Power Performance 3-1
3.1.3 Monitoring Performance 3-2
3.1.4 Lifetime Performance 3-3
3.2 Interface Requirements 3-3
3.2.1 Thermal Interface 3-3
3.2.2 Mechanical Interface 3-4
3.2.3 Electrical Power Interface 3-4
3.2.4 Data Interface 3-5
3.2.5 Command Interface 3-5
3.2.6 Telemetry Interface 3-6
3.2.7 Flight Software & Firmware 3-6
3.2.8 Test Interface 3-6
3.3 Environment Requirements 3-7
3.3.1 Thermal Environment 3-7
3.3.2 Electromagnetic Compatibility (EMC) Environment 3-7
3.3.3 Space Radiation Environment 3-13
3.3.4 Structural & Mechanical Environment 3-20
3.3.5 Contamination Environment 3-26
3.4 Operational Requirements 3-27
3.5 Design and Construction 3-27
3.5.1 Materials & Parts 3-27
3.5.2 Connectors 3-27
APPENDIX A - Acronym List 1

**CHECK THE TIRS MIS AT https://tirsmis.gsfc.nasa.gov
TO VERIFY THAT THIS IS THE CORRECT VERSION PRIOR TO USE.**

LIST OF FIGURES

Figure Page

Figure 2-1. Conceptual Location of the Cryocooler on the TIRS Instrument 2-1

Figure 2-2. TIRS Cooler Block Diagram 2-2

Figure 2-3. TMU Within LDCM Coordinate System 2-5

Figure 2-4. TIRS Sensor Unit Coordinates Reference 2-6

Figure 2-5. CCE Location and Orientation on LDCM 2-7

Figure 3-1. Cooler Turn-on Transient Limits 3-2

Figure 3-2. Conducted Emissions Limits on Power Lines 3-8

Figure 3-3. Common Mode Conducted Emissions Limits on Power Lines 3-9

Figure 3-4. Unintentional Radiated Narrowband Electric Field Limits 3-10

Figure 3-5. Powerline Conducted Susceptibility Limits 3-10

Figure 3-6. Power Line Conducted Susceptibility 3-11

Figure 3-7. Transient Conducted Susceptibility on Powerlines 3-11

Figure 3-8. On-Orbit Operational Radiated Susceptibility Environment 3-13

Figure 3-9. Surface Incident Integral Trapped Proton 3-14

Figure 3-10. Surface Incident Integral Trapped Electron 3-15

Figure 3-11. Surface Incident Integral Solar Proton 3-16

Figure 3-12. Total Ionizing Dose Curves for Dose at the Center of Solid Al Spheres. 3-17

Figure 3-13. LET Spectra Galactic Cosmic Ray Ions Hydrogen through Uranium 3-18

Figure 3-14. LET Spectra for Hydrogen through Uranium - 3 Worst Case Situations 3-18

Figure 3-15. Long-Term Integral Proton Fluxes for SEE Evaluation 3-19

Figure 3-16. Worst Case Integral Proton Fluxes for SEE Evaluation. 3-20

Figure 3-17. TMU Volume (mm, inches in [ ]) 3-21

Figure 3-18. Component Mass Acceleration Curve (MAC) 3-24

**CHECK THE TIRS MIS AT https://tirsmis.gsfc.nasa.gov
TO VERIFY THAT THIS IS THE CORRECT VERSION PRIOR TO USE.**

LIST OF TABLES

Table Page

Table 1-1. Applicable Documents 1-1

Table 1-2. Literature References..... 1-2

Table 2-1. Common Units of Measure..... 2-4

Table 3-1. Radiated Susceptibility Limits for Operations at VAFB..... 3-12

Table 3-2. Random Vibration Test Levels Components..... 3-23

Table 3-3. Component Design Loads (Break Points) 3-25

Table 3-4. Shock Response Spectrum for Cooler Equipment 3-25

Table 3-5. Cooler External (Non-Optical) Surface Contamination Levels..... 3-26

CHECK THE TIRS MIS AT https://tirsmis.gsfc.nasa.gov
TO VERIFY THAT THIS IS THE CORRECT VERSION PRIOR TO USE.

1.0 INTRODUCTION

1.1 SCOPE

This specification defines the requirements for the performance, interfaces, environment, and operation of the Thermal Infrared Sensor (TIRS) Cryocooler (Cooler).

1.2 PRECEDENCE

Conflicts arising between the requirements of this specification and the requirements of any document referenced herein will be referred to the GSFC contracting official for resolution.

1.3 APPLICABLE AND REFERENCE DOCUMENTS

1.3.1 Applicable Documents

The TIRS Cryocooler Specification is consistent with, and responsive to, the following applicable documents of the revision and release date shown.

Table 1-1. Applicable Documents

Document Number	Revision/ Release Date	Document Title
		TIRS-Cooler Interface Control Document (ICD)
GSFC-427-03-05		LDCM Environmental Verification Requirements (LEVR)
TIRS-MA-PLAN-0005		TIRS Mission Assurance Implementation Plan (MAIP)
TIRS-SE-PLAN-0010		TIRS Contamination Control Plan

1.3.2 Literature References

For additional clarification, reference is made to documents in the open literature. These documents should be used for clarification and understanding of the requirement. These documents do not constitute additional requirements on the vendor.

CHECK THE TIRS MIS AT https://tirsmis.gsfc.nasa.gov
TO VERIFY THAT THIS IS THE CORRECT VERSION PRIOR TO USE.

Table 1-2. Literature References

Authors	Document Number	Revision/ Release Date	Document Title
	FED-STD-209E		Federal Standard Airborne Particulate Cleanliness Classes in Cleanrooms and Clean Zones
	IEST-STD-CC1246D		Product Cleanliness Levels and Contamination Control Program
	ASTM E595-93		Standard Test Method for Total Mass Loss and Collected Volatile Condensable Materials from Outgassing in a Vacuum Environment
	MIL-STD-461C		Requirements For The Control Of Electromagnetic Interference Characteristics Of Subsystems And Equipment
	MIL-STD-462	Notice 1	Measurement of Electromagnetic Interference Characteristics of Subsystems and Equipment

CHECK THE TIRS MIS AT https://tirsmis.gsfc.nasa.gov
TO VERIFY THAT THIS IS THE CORRECT VERSION PRIOR TO USE.

2.0 FUNCTIONAL DESCRIPTION

The TIRS Instrument requires a cryocooler with two stages of cooling: the first stage cools a layer of thermal shielding and the second stage cools the Focal Plane Assembly (FPA). The TIRS Cryocooler maintains the instrument focal plane at temperatures required to meet radiometric performance. Cooling of the FPA is accomplished conductively via a shielded Thermal Strap Assembly (TSA) that also provides contamination control for the cold surfaces. The two identified models of cryocooler are the Engineering Model (EM) and a Flight Model (FM).

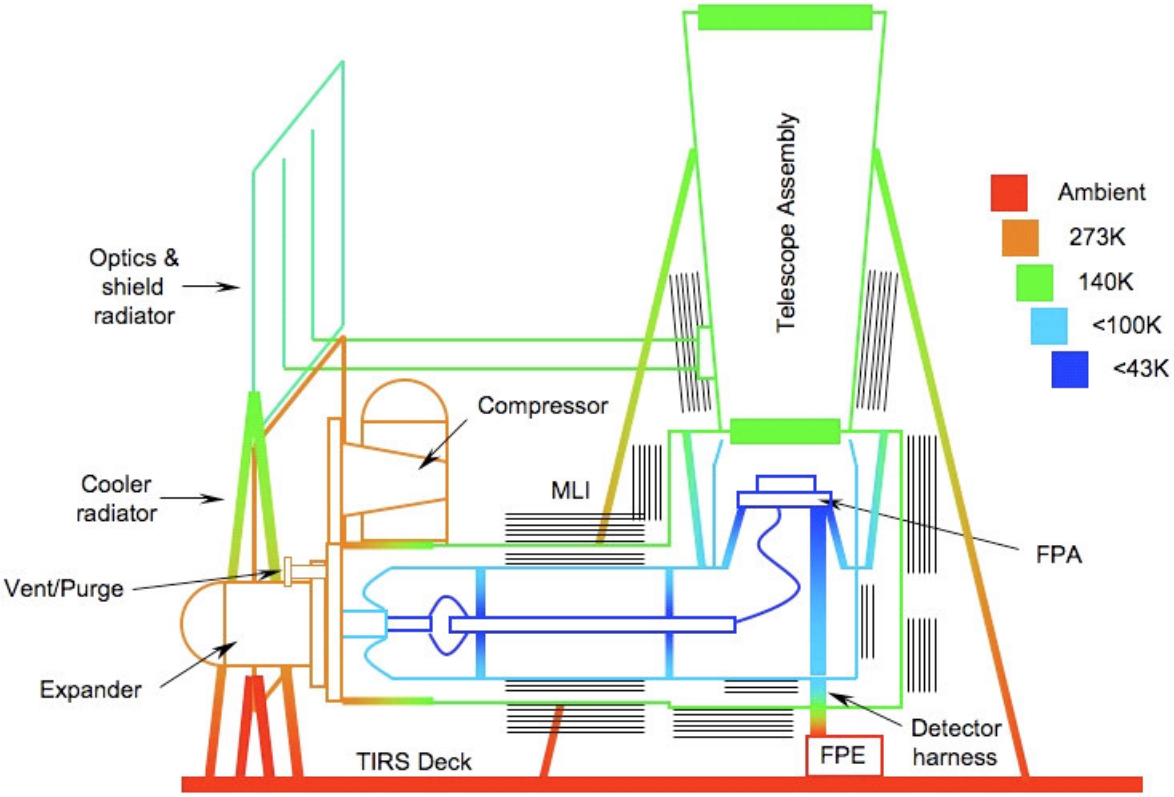

Figure 2-1. Conceptual Location of the Cryocooler on the TIRS Instrument

CHECK THE TIRS MIS AT https://tirsmis.gsfc.nasa.gov
TO VERIFY THAT THIS IS THE CORRECT VERSION PRIOR TO USE.

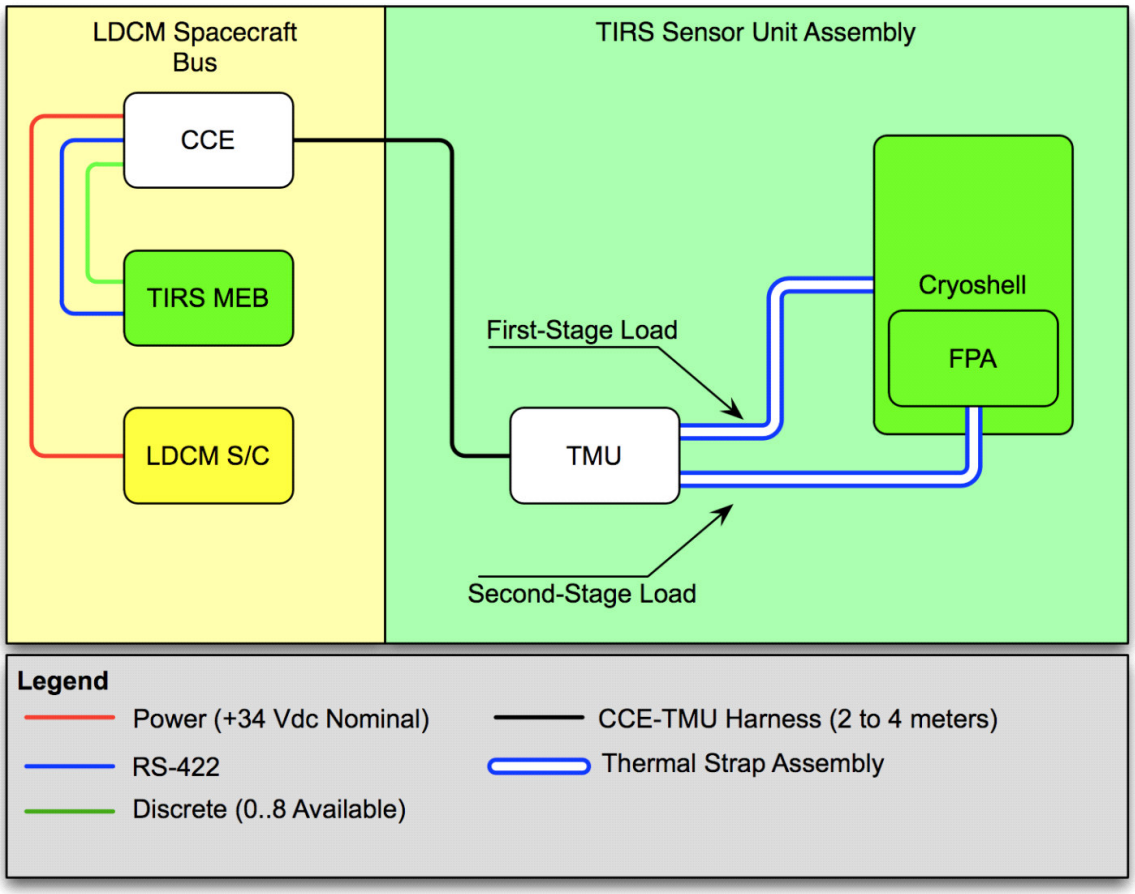

Figure 2-2. TIRS Cooler Block Diagram

2.1 DEFINITION OF TERMS

The paragraphs below describe a general set of definitions for items used throughout this document.

Cooler Control Electronics (CCE): The CCE converts, conditions, switches, and distributes incoming +34 Vdc (nominal) spacecraft (SC) power, and furnishes it in the correct form to drive the TMU of the Cooler. The CCE also provides closed-loop control of various compressor and cold-head functions, monitors the status of key performance and safety parameters, and communicates with the TIRS Main Electronics Box (MEB) via an RS-422 connection. Generally these control functions will involve analog and digital circuitry, and supporting software and/or firmware.

End-Of-Life Cooling Capacity: The End-of-Life (EOL) Cooling Capacity is defined as the cooling capacity at the coldload interfaces at the predicted EOL Condition with all host thermal interfaces at their maximum Flight Allowable-Operating temperatures.

CHECK THE TIRS MIS AT https://tirsmis.gsfc.nasa.gov
TO VERIFY THAT THIS IS THE CORRECT VERSION PRIOR TO USE.

End-Of-Life Operating Point: The End-of-Life (EOL) Operating Point (EOP) is defined as the Cooler at equilibrium with all host thermal interfaces and with the cryogenic loads applied and all host thermal interfaces at their maximum Flight Allowable-Operating temperatures.

End-Of-Life Operating Point Input Power: EOP Input Power is defined as the input power to the Cooler Control Electronics at nominal bus voltage with all host thermal interfaces at their maximum Flight Allowable-Operating temperatures, with the Cooler in its Predicted EOL Condition, and with the cold-head loads corresponding to the EOL Operating Point.

Engineering Model (EM): The EM Cryocooler shall consist of a single TMU, form, fit and function identical to the flight unit, and its associated control electronics. The EM electronics need not be packaged for flight, but shall include all the functionality of the flight CCE.

First-Stage Load Interface: The thermo-mechanical attach point on the first ("warm") stage of the coldhead.

Flight Model (FM): The FM Cryocooler consists of a single flight compressor and expander/coldhead assembly, referred to as the Thermo-Mechanical Unit (TMU), a single remote flight Cooler Control Electronics (CCE), and a flight wire harness to connect the CCE to the TMU.

Margin: margin is defined as follows:

$$\text{Margin} = \text{Allocation} - \text{Current Best Estimate (CBE)}$$

$$\text{Percentage Margin} = \frac{\text{Margin}}{\text{Allocation}} \times 100$$

Note: CBE includes uncertainties.

Second-Stage Load Interface: The thermo-mechanical attach point on the second ("cold") stage of the coldhead.

Thermal Strap Assembly (TSA): The assembly of a thermal strap for conductive cooling of the Focal Plane Assembly (FPA) and two layers of coaxial thermal shields. The inner thermal shield is actively cooled to its thermally balanced temperature and the outer shield is conductively cooled by the telescope radiator to under 160 K. The TSA is also intended for contamination control for the cold surfaces.

Thermo-Mechanical Unit (TMU): The Thermo-Mechanical Unit consists of two elements of the Cooler; the compressor and the expander or coldhead. The compressor provides a compressed gas pressure wave to the cold head assembly, integrally or through a transfer line. The compressor and expander are structurally mounted at their heat rejection interface.

**CHECK THE TIRS MIS AT https://tirsmis.gsfc.nasa.gov
TO VERIFY THAT THIS IS THE CORRECT VERSION PRIOR TO USE.**

2.2 COMMON UNITS OF MEASURE

Table 2-1. Common Units of Measure

Quantity	Unit	
	Name	Symbol
Data Rate	Kilobits Per Second	kbps
Electrical Potential	Volt	V
Energy	Electron Volt	eV
Force	Newtons	N
Force of Gravity	G	G
Frequency	Hertz	Hz
Length	Meter	m
Mass	Kilogram	kg
Power	Watts	W
Resistance	Ohms	Ω
Temperature	Kelvin	K
Temperature	Celsius	C
Thermal Conductance	Watts/Kelvin	W/K
Volts Direct Current	Volts DC	Vdc

Note that for this document, 1 kilobit is defined as 1024 bits.

2.3 ORIENTATION

2.3.1 TMU Orientation & Coordinates

The TMU will be mounted within the given volume allocation on the cryocooler radiator and will share the TIRS coordinate system as shown in Figure 2-3 and Figure 2-4.

CHECK THE TIRS MIS AT https://tirsmis.gsfc.nasa.gov
TO VERIFY THAT THIS IS THE CORRECT VERSION PRIOR TO USE.

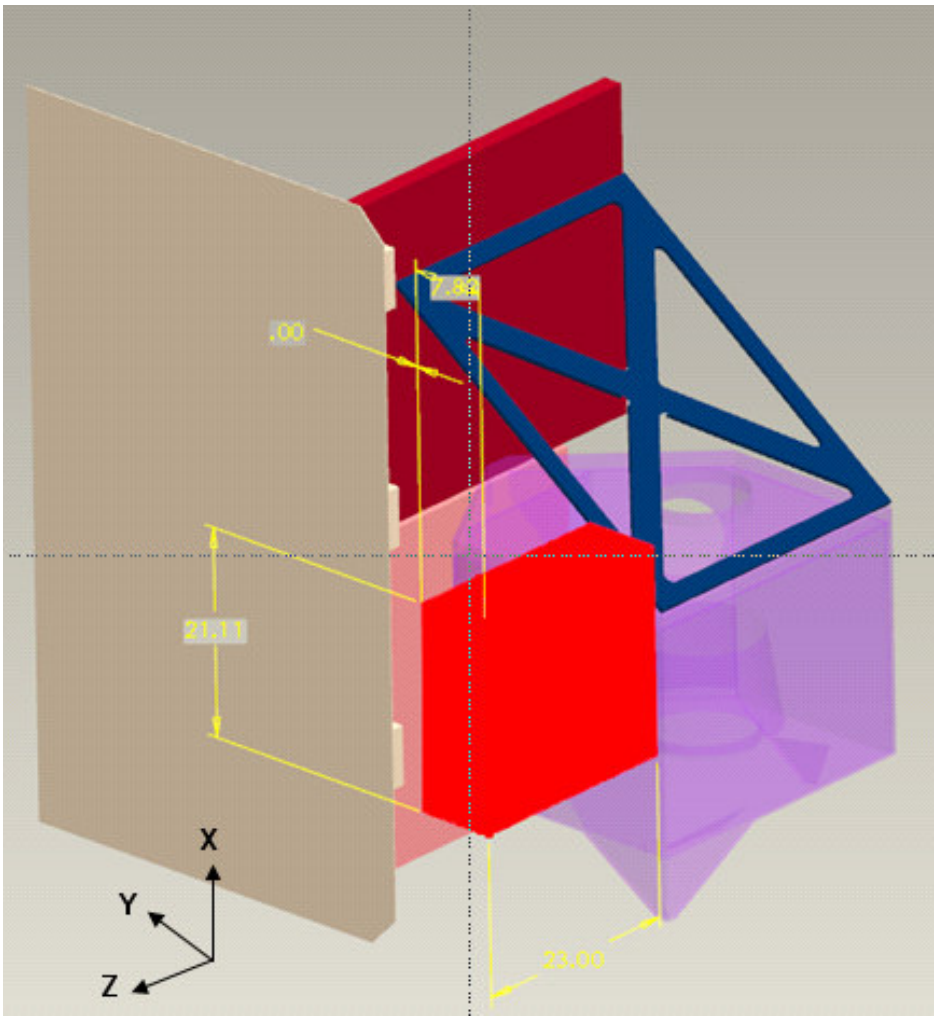

Figure 2-3. TMU Within LDCM Coordinate System

CHECK THE TIRS MIS AT https://tirsmis.gsfc.nasa.gov
TO VERIFY THAT THIS IS THE CORRECT VERSION PRIOR TO USE.

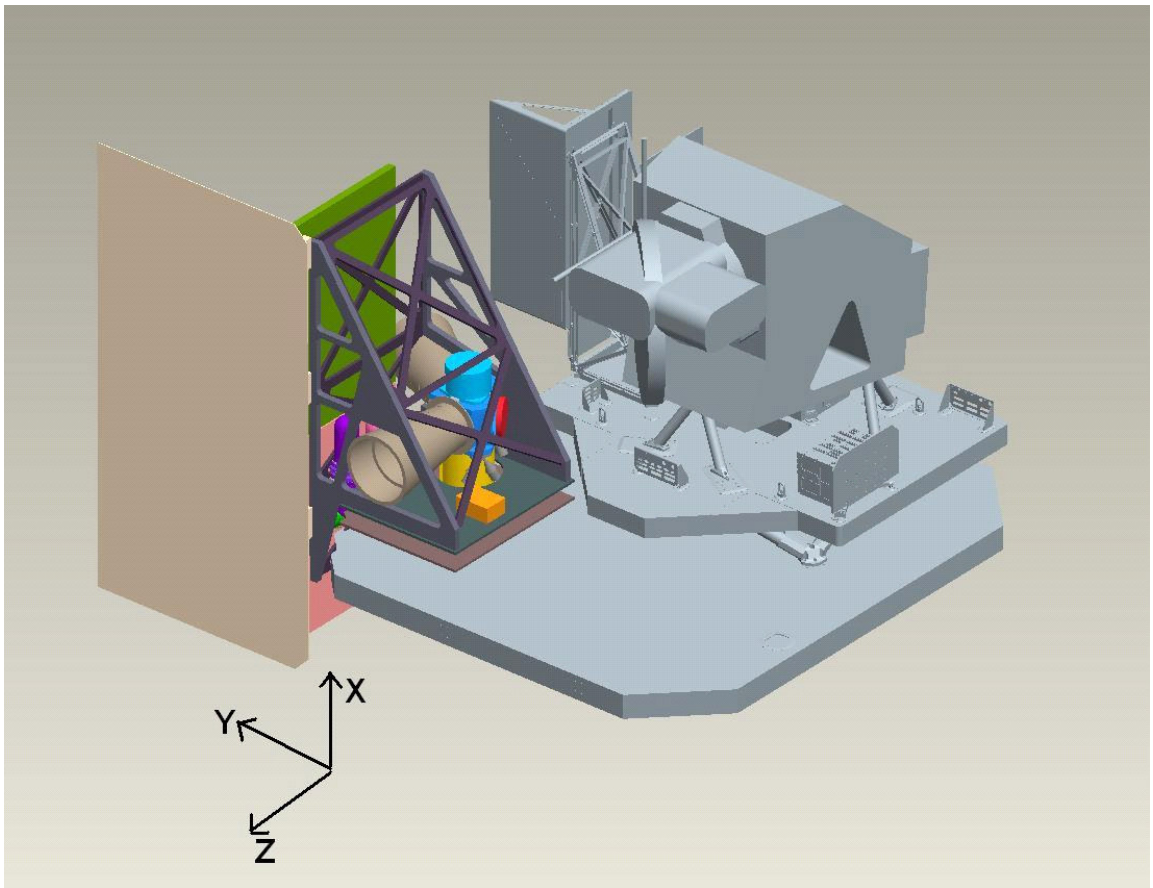

Figure 2-4. TIRS Sensor Unit Coordinates Reference

2.3.2 CCE Orientation & Coordinates

The CCE will be located on the spacecraft bus and share the TIRS coordinate system as shown in Figure 2-5.

CHECK THE TIRS MIS AT https://tirsmis.gsfc.nasa.gov
TO VERIFY THAT THIS IS THE CORRECT VERSION PRIOR TO USE.

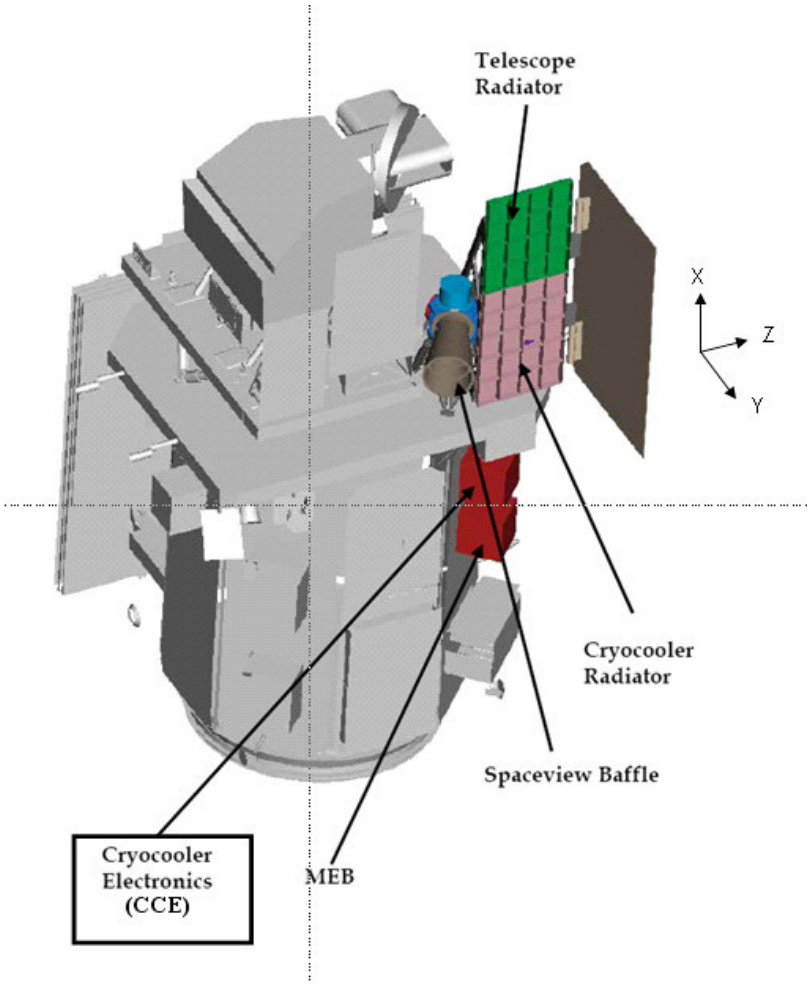

Figure 2-5. CCE Location and Orientation on LDCM

CHECK THE TIRS MIS AT https://tirsmis.gsfc.nasa.gov
TO VERIFY THAT THIS IS THE CORRECT VERSION PRIOR TO USE.

3.0 REQUIREMENTS

3.1 PERFORMANCE REQUIREMENTS

CC-195 The Cooler shall meet all performance requirements in this specification in 0 G.

CC-196 The Cooler shall meet all performance requirements during ground testing in 1 G with its cold-finger axis/axes at 90 degrees to the vertical.

CC-197 The Cooler shall be capable of demonstrating the health of its principal functions and interfaces in a test at ambient temperature and pressure and lasting less than 30 minutes. Note: The System Functional Test (SFT) will be used as a benchmark health check-in test at every level of assembly/integration.

CC-198 The Cooler shall have an overall reliability of at least 96% at the end of its specified operating lifetime.

CC-199 The Cooler shall meet its performance requirements with a compressor-to-expander separation (transfer line length) of 0.30 meters.

3.1.1 Cooling Performance

CC-201 The Cooler shall provide 2 W of cooling power at its Second-Stage Load interface at an operating set-point temperature under 40 K given the Power Performance specified in Section 3.1.2 of this specification.

CC-202 The Cooler shall provide 3 W of cooling power at its First-Stage Load interface at an operating temperature under 100 K given the Power Performance specified in Section 3.1.2 of this Specification.

CC-203 The Cooler Second-Stage set-point temperature shall be capable of being set to any temperature in the range from 30 K to 50 K to an accuracy of ±100 mK.

CC-204 The Cooler shall be capable of limiting the variation of the Second-Stage Load interface temperature to less than 10 mK peak-to-peak over a 34 minute period.

3.1.2 Power Performance

CC-207 The Cooler shall meet the Cooling Performance specified in Section 3.1.1 of this Specification, at End Of Life (EOL) and a heat rejection temperature of 273K, while drawing less than 225 W of spacecraft bus power.

CC-208 The Cooler total transient in-rush current limits shall not exceed 250% of the Maximum Steady State (MSS) current.

CC-209 The duration of the Cooler total transient in-rush current shall be less than 50 milliseconds as shown in Figure 3-1.

CHECK THE TIRS MIS AT https://tirsmis.gsfc.nasa.gov
TO VERIFY THAT THIS IS THE CORRECT VERSION PRIOR TO USE.

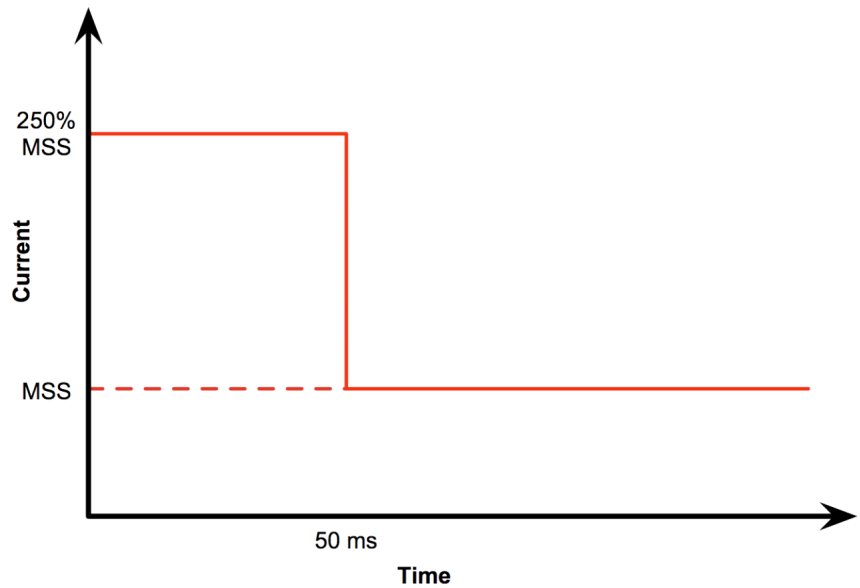

Figure 3-1. Cooler Turn-on Transient Limits

CC-212 During all normal operating modes, component common mode voltage shall never exceed 100 mV peak-to-peak (50 mV goal) from 30 Hz to 50 MHz.

CC-213 Measurements to verify compliance with the common mode noise requirement shall be made between the current probe around +32 Vdc and between return and ground.

CC-214 The Cooler shall be unharmed in the event that the spacecraft removes power input without prior notice.

CC-215 The Cooler shall continue to operate if both sides of the spacecraft become powered simultaneously.

CC-216 The Cooler shall power up in a known safe state, even after unannounced power removal.

3.1.3 Monitoring Performance

CC-218 The Cooler instrumentation shall contain temperature sensors to verify the thermal model, and assess the health and performance of the Cooler over its lifetime.

CC-219 The Cooler First-Stage Load interface temperature sensors and their readout electronics shall be capable of measuring the interface temperature in the range from 60 K to 323 K.

CC-220 In the temperature range 60 K to 323 K, the Cooler First-Stage Load interface temperature sensors and their readout electronics shall be capable of a resolution of ±1 K, with an accuracy of ±1 K, over the mission duration.

CHECK THE TIRS MIS AT https://tirsmis.gsfc.nasa.gov
TO VERIFY THAT THIS IS THE CORRECT VERSION PRIOR TO USE.

CC-221 The Cooler Second-Stage Load interface temperature sensors and their readout electronics shall be capable of measuring the interface temperature in the range from 30 K to 323 K.

CC-222 In the temperature range 61 K to 323 K, the Cooler Second-Stage Load interface temperature sensors and their readout electronics shall be capable of a resolution of ±1 K, with an accuracy of ±1 K, over the mission duration.

CC-223 In the temperature range 30 K to 60 K, the cooler Second-Stage Load interface temperature sensors and their readout electronics shall be capable of a resolution of ±1 mK, with an accuracy of ±1 mK, over the mission duration.

3.1.4 Lifetime Performance

CC-225 The Cooler shall have an operating life no less than 35,000 hours (~4 years) including both in-space operation and ground-test operation.

CC-226 The Cooler shall have a non-operational ground storage state that does not require intervention for at least 30 days.

CC-227 The Cooler shall be capable of operating for no less than 500 start/stop cycles and 200 cryogenic cooling cycles over its operating life. Note: A cryogenic cooling cycle consists of a cooldown from ambient to cryogenic temperatures and a warm-up from cryogenic to ambient temperatures.

CC-228 The Cooler shall have a working-fluid leak rate of less than 1.0E-9 std cc/s, as measured by a calibrated helium mass spectrometer, when inside of a vacuum chamber and the components are pressurized.

3.2 INTERFACE REQUIREMENTS

The detailed interfaces between the Cooler and TIRS and between the Cooler and the SC will be defined in the TIRS-Cooler ICD

3.2.1 Thermal Interface

CC-232 The cold-finger Second-Stage Load interface shall be configured with a bolted-joint conductive cold-load interface suitable for conducting its cryogenic load to the Cooler with a thermal conductance of > 4 W/K at 40 K across the bolted joint.

CC-233 The cold-finger First-Stage Load interface shall be configured with bolted-joint conductive cold-load interface suitable for conducting its cryogenic load to the Cooler with a thermal conductance of >6 W/K at 100 K across the bolted joint.

CC-234 The Compressor and Expander conductive heat rejection interfaces shall be defined in the TIRS-Cooler ICD.

CC-235 The expander coldfinger(s) shall be mechanically integrable with the multilayer coaxial TSA in a manner that allows for the contamination closeout of the outer TSA layer while meeting all other requirements of this specification.

CHECK THE TIRS MIS AT https://tirsmis.gsfc.nasa.gov
TO VERIFY THAT THIS IS THE CORRECT VERSION PRIOR TO USE.

3.2.2 Mechanical Interface

CC-237 Interface disturbances generated by the TMU, with active vibration cancellation turned on, shall not exceed 0.1N in any axis for the first three harmonics and 0.2N for higher harmonics.

CC-238 The Cooler shall employ active electronic noise cancellation.

CC-239 The Cooler compressor fundamental drive frequency shall, by software command, be capable of being changed from the baseline drive frequency by at least +/- 7%.

3.2.3 Electrical Power Interface

CC-241 The Cooler shall receive 2 (1 Primary, 1 Redundant) unregulated +34 Vdc bus operational power connections from the SC.

CC-242 The Cooler shall be compatible with an input voltage range from +22 Vdc to +36 Vdc with a nominal of +34 Vdc.

CC-243 The Cooler shall be undamaged with the application of power between 0 Vdc and +40 Vdc.

CC-244 The return lines for power and status shall be separate

CC-245 The Cooler shall use suppression devices at the source of the inductive transients, such as diodes across all relay coils or other energy sources that could induce transients on the power lines during turn-off.

CC-246 The Cooler shall be protected from over or under voltage from the SC.

CC-247 The Cooler shall be compatible with a noise and ripple input less than 1.0 Volts peak-to-peak over the frequency range of 1 Hz to 10 MHz; and less than 0.5 Volts peak-to-peak for frequencies over 10 MHz, at the input to the Cooler.

CC-248 During all normal operating modes, component common mode voltage shall never exceed 100 mV peak-to-peak (50 mV goal) from 30 Hz to 50 MHz.

CC-249 Measurements to verify compliance with the common mode noise requirement shall be made between the current probe around +32 Vdc and between return and ground.

CC-250 The Cooler power connectors shall be male on the Cooler side to protect from accidental short-circuit.

CC-251 Cooler grounding shall be consistent with the TIRS-Cooler ICD.

CC-252 The Cooler primary power leads and returns shall be isolated from signal and chassis ground by a DC resistance greater than 1 MΩ when measured with test equipment supplying potential up to +40 Vdc.

CC-253 The Cooler DC/DC isolation converter in the CCE shall connect its secondary power return lines to the CCE's chassis

CHECK THE TIRS MIS AT https://tirsmis.gsfc.nasa.gov
TO VERIFY THAT THIS IS THE CORRECT VERSION PRIOR TO USE.

CC-254 The Cooler secondary power returns shall be isolated from primary power returns by a DC resistance greater than 1 MΩ.

CC-255 DC/DC isolation converters providing power to external equipment such as remote sensors shall provide that power on separate dedicated power outputs, which will be grounded to chassis only at one end, either at the converter or the load, but not at both ends.

CC-256 Each discrete heater shall be isolated from the local signal reference plane.

CC-257 Each discrete heater shall be referenced to the signal ground in the electronics box containing its respective drive circuitry.

CC-258 Each discrete telemetry point, whether analog or bi-level, shall be isolated from the local signal reference plane.

CC-259 Each discrete telemetry point, whether analog or bi-level, shall be connected differentially to its respective sense circuitry.

CC-260 The body of each chassis connector shall be electrically connected to the chassis with a DC resistance less than or equal to 10 mΩ.

3.2.4 Data Interface

CC-262 The Cooler shall interface with TIRS for command and telemetry through an RS-422 connection in accordance with the TIRS-Cooler ICD.

CC-263 Telemetry rate and latency for data accessed through the RS-422 link shall be defined and documented in the TIRS-Cooler ICD.

CC-264 The Cooler shall be configured by command from TIRS.

CC-265 The Cooler vendor shall identify a number, not to exceed eight (8), discrete pulse commands that will be provided.

CC-266 The Cooler shall have independent data drivers and receivers for data interfaces.

3.2.5 Command Interface

CC-268 The Cooler shall receive commands from the TIRS MEB.

CC-269 The Cooler shall require a command frequency of 4 Hz or less.

CC-270 The Cooler shall have no commands that result in a command lockout.

CC-271 The Cooler shall have no single command that could cause the loss of the Cooler assuming no previously failed components.

CC-272 The Cooler shall have no single command that could cause the loss of TIRS assuming no previously failed components.

CC-273 The Cooler shall reject invalid commands.

CC-274 The Cooler shall have no commands that depend on the initial state, such as a toggle command.

CHECK THE TIRS MIS AT https://tirsmis.gsfc.nasa.gov
TO VERIFY THAT THIS IS THE CORRECT VERSION PRIOR TO USE.

CC-275 The Cooler shall be capable of verifying command execution via telemetry.

3.2.6 Telemetry Interface

CC-277 The Cooler telemetry production shall not exceed 2 kbps orbital average during nominal operations.

CC-278 The Cooler telemetry data packet structure shall be as defined in the TIRS-Cooler ICD.

CC-279 The Cooler shall report within its telemetry parameters the status of the last command executed.

3.2.7 Flight Software & Firmware

CC-281 All Cooler software and/or firmware shall be implemented with an internal version identifier (embedded in the executable) that can be included in telemetry.

CC-282 The Cooler software and/or firmware shall be designed so that revisions or parameter uploads can be installed and verified in-flight.

CC-283 The Cooler shall carry a copy of the baseline Cooler parameters required to provide normal Cooler operation (such as startup, vibration and temperature control, monitoring, etc.), which can, upon power-up, be utilized as a default.

CC-284 The Cooler software and/or firmware shall be capable of receiving updates over multiple ground contacts.

3.2.8 Test Interface

CC-286 Test points and Integration and Test (I&T) interfaces shall be accessible, clearly marked, and designated when the Cooler is mounted to TIRS, and when the TIRS is installed on the LDCM Spacecraft. Note: Cooler test points and I&T interface accessibility will be detailed in the TIRS-Cooler ICD.

CC-287 All connectors on test cables that interface with connectors on the flight hardware shall be of flight quality.

CC-288 Test points shall not be used for acceptance or verification of the Cooler performance requirements. Test points for use at the TIRS/LDCM level integration and test will be used for trouble shooting only.

CC-289 Test connectors shall utilize the side of a male/female pair that offers the better protection against accidental short-circuits

CC-290 Test points shall be designed and implemented in accordance with all applicable flight standards and component ratings.

CC-291 Test connectors shall not be used to provide power to internal Cooler circuitry with the exception of components that are used exclusively for test and are completely isolated from flight circuitry.

**CHECK THE TIRS MIS AT https://tirsmis.gsfc.nasa.gov
TO VERIFY THAT THIS IS THE CORRECT VERSION PRIOR TO USE.**

CC-292 Test connectors shall comply with grounding requirements as defined in the TIRS-Cooler ICD.

CC-293 All test points shall incorporate short-circuit protection.

CC-294 Test point interface circuit and equipment failures shall not propagate failures into TIRS.

CC-295 Captive Electromagnetic Interference (EMI) connector covers shall be installed whenever the test connector is not in use.

3.3 ENVIRONMENT REQUIREMENTS

CC-297 The Cooler shall be designed to be compliant with the LDCM Environmental Verification Requirements (LEVR).

3.3.1 Thermal Environment

CC-299 The temperature at the CCE mounting interface shall be compliant with the TIRS-Cooler ICD.

CC-300 The total heat transfer of the CCE shall be less than the value specified in the TIRS-Cooler ICD.

CC-301 The CCE shall radiate as defined in the TIRS-Cooler ICD.

CC-302 The CCE minimum power on temperature shall be documented in TIRS-Cooler ICD.

CC-303 The temperature range of the CCE while unpowered shall be - 35 C to +55 C.

CC-304 The CCE shall be capable of being turned on at the CCE cold survival temperature.

3.3.2 Electromagnetic Compatibility (EMC) Environment

The EMC specifications given in this section are based on the test requirements of MIL-STD-461C and MIL-STD-462 as amended by Notice 1, and IEEE-63. All references in this document to MIL-STD-462 assume reference to Notice 1.

3.3.2.1 Conducted Emissions

CC-308 Conducted Emissions (CE) on Cooler power, and power-return leads shall be limited to the levels specified in Figure 3-2

CHECK THE TIRS MIS AT https://tirsmis.gsfc.nasa.gov
TO VERIFY THAT THIS IS THE CORRECT VERSION PRIOR TO USE.

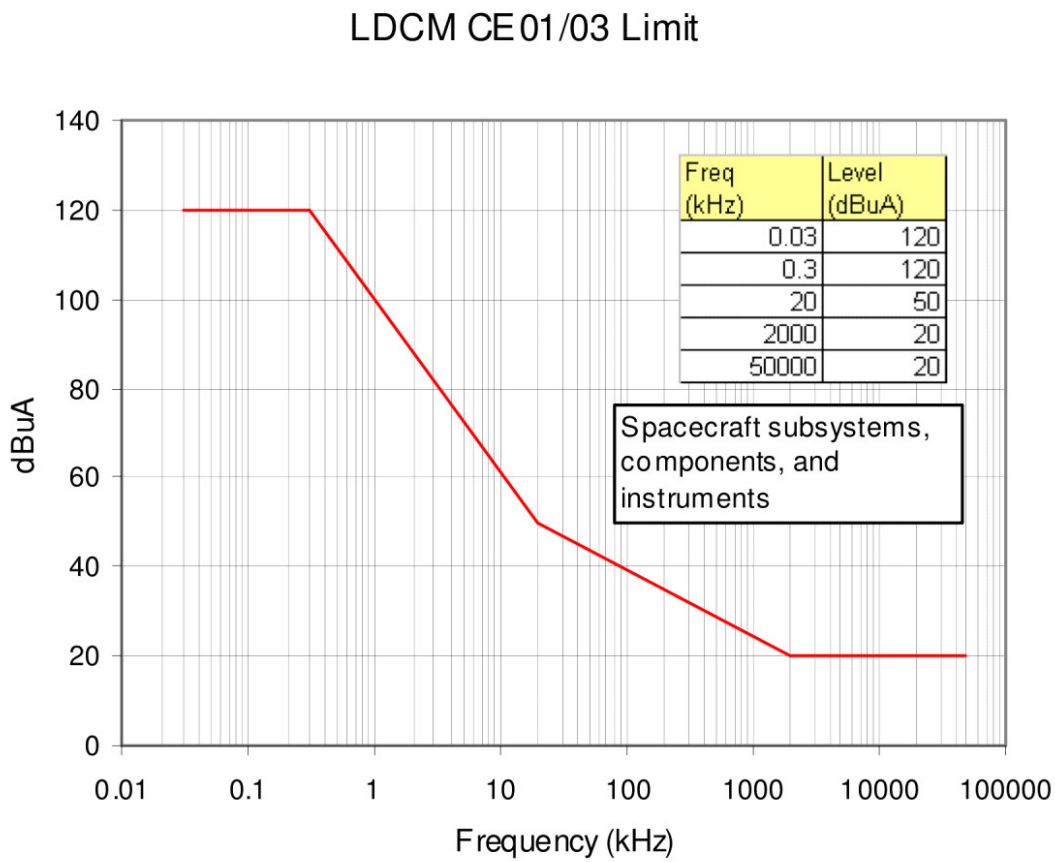

Figure 3-2. Conducted Emissions Limits on Power Lines

CC-311 The Cooler CE Common Mode Noise (CMN) shall be limited to the levels shown in Figure 3-3.

CHECK THE TIRS MIS AT https://tirsmis.gsfc.nasa.gov
TO VERIFY THAT THIS IS THE CORRECT VERSION PRIOR TO USE.

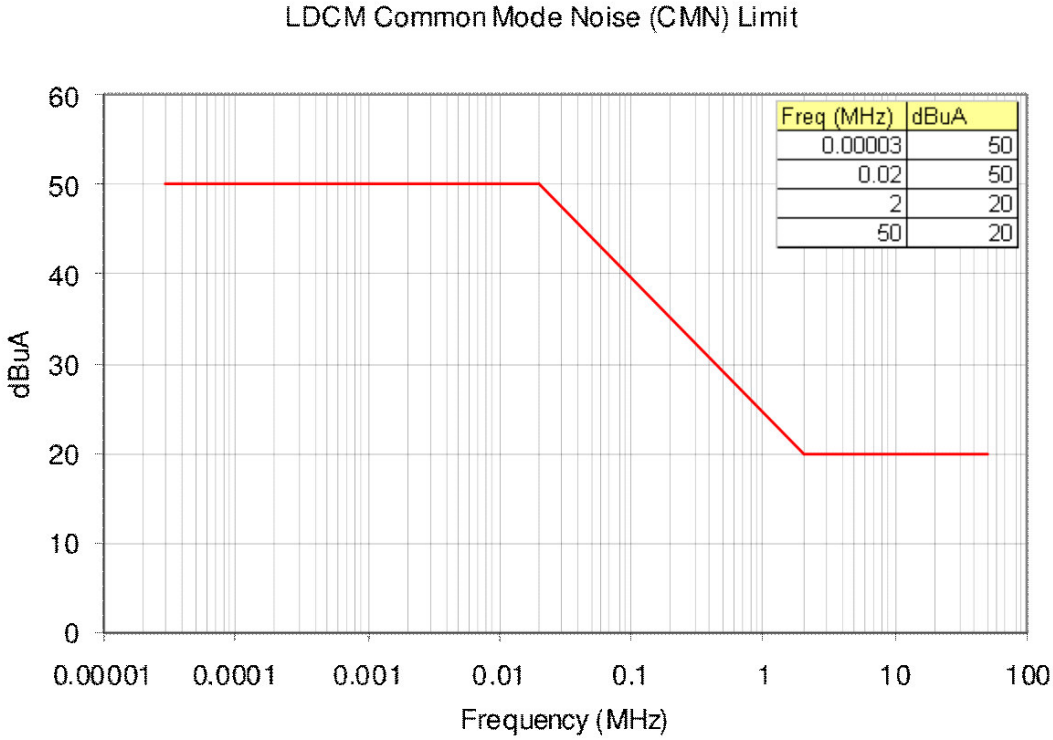

Figure 3-3. Common Mode Conducted Emissions Limits on Power Lines

3.3.2.2 Radiated Emissions

CC-315 Unintentional radiated narrowband electric field levels produced by the Cooler shall be limited to the levels specified in Figure 3-4.

CHECK THE TIRS MIS AT https://tirsmis.gsfc.nasa.gov
TO VERIFY THAT THIS IS THE CORRECT VERSION PRIOR TO USE.

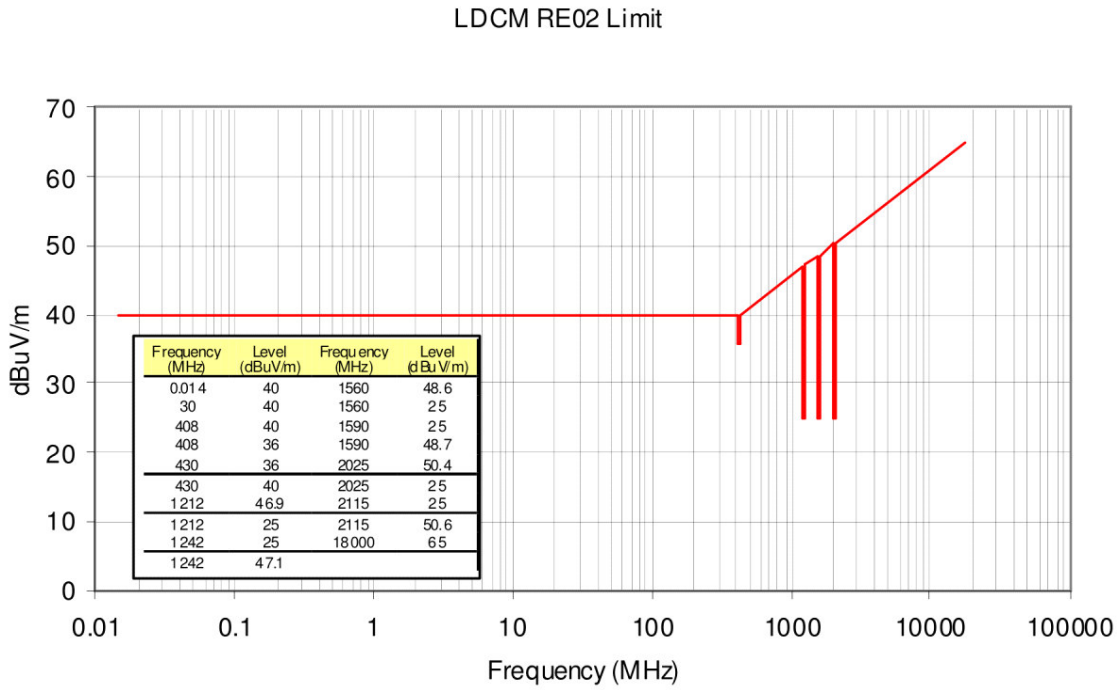

Frequency (MHz)	Level (dBuV/m)	Frequency (MHz)	Level (dBuV/m)
0.014	40	1560	48.6
30	40	1560	25
408	40	1590	25
408	36	1590	48.7
430	36	2025	50.4
430	40	2025	25
1212	46.9	2115	25
1212	25	2115	50.6
1242	25	18000	65
1242	47.1		

Figure 3-4. Unintentional Radiated Narrowband Electric Field Limits

3.3.2.3 Conducted Susceptibility

CC-319 The Cooler Conducted Susceptibility levels, under the conditions of the Conducted Susceptibility (CS) test CS01, shall not exceed those shown in Figure 3-5.

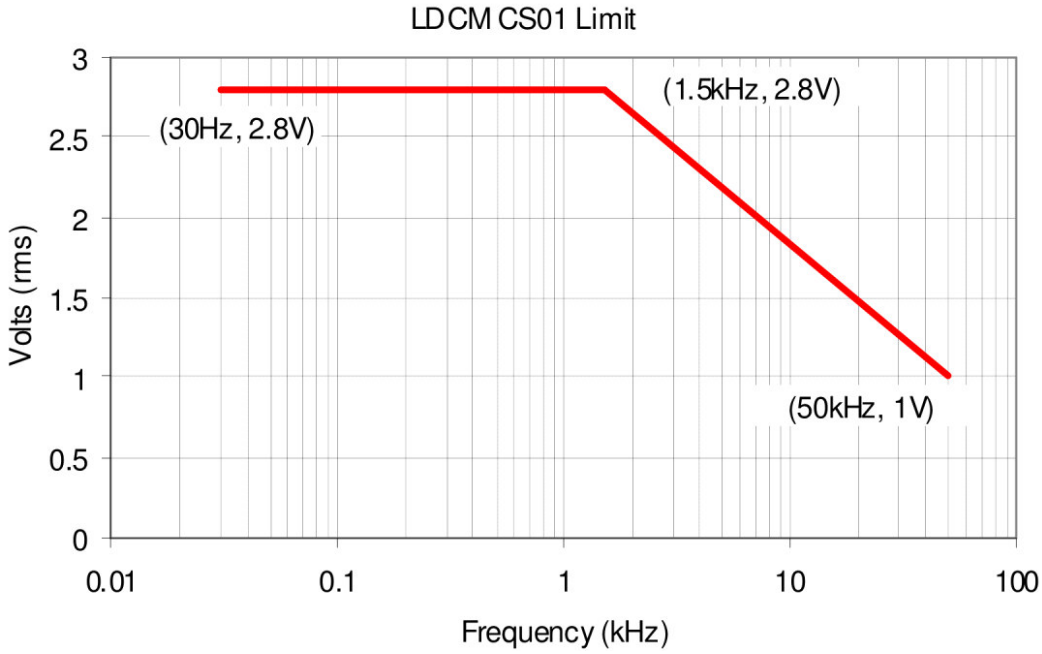

Figure 3-5. Powerline Conducted Susceptibility Limits

CHECK THE TIRS MIS AT https://tirsmis.gsfc.nasa.gov
TO VERIFY THAT THIS IS THE CORRECT VERSION PRIOR TO USE.

CC-322 Cooler Conducted Susceptibility levels, under the conditions of the Conducted Suseptibility (CS) test CS02, shall not exceed those shown in Figure 3-6.

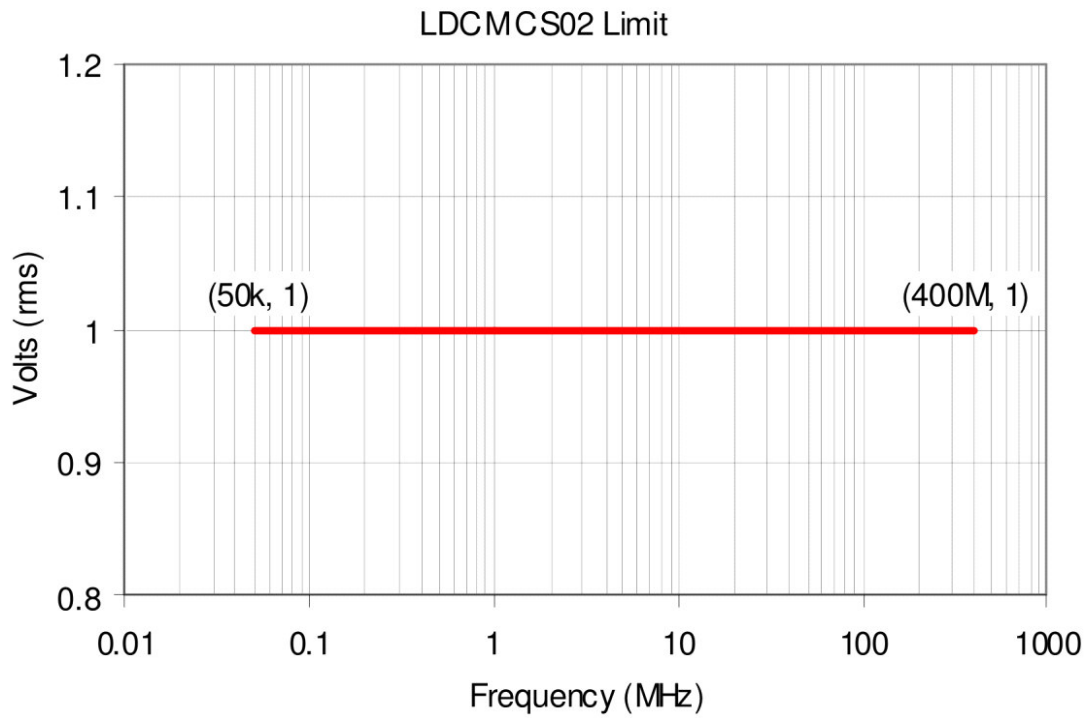

Figure 3-6. Power Line Conducted Susceptibility

CC-325 The Cooler shall be able to survive the CS06 Conducted Susceptibility test with the transient applied defined in Figure 3-7 as per the CS06 testing environment.

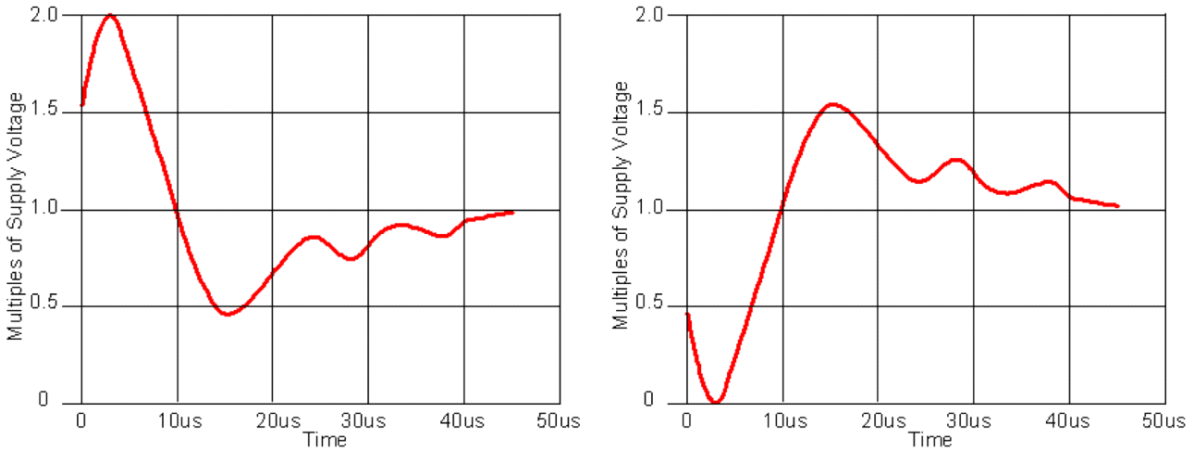

Figure 3-7. Transient Conducted Susceptibility on Powerlines

3.3.2.4 Radiated Susceptibility Requirements

CC-329 The Cooler shall survive in a powered state when exposed to external electromagnetic signals in accordance with the requirements and test methods of the Radiated Susceptibility (RS) test RS03, using the appropriate modulation of the applied susceptibility signal and the test levels as defined in Table 3-1.

CHECK THE TIRS MIS AT https://tirsmis.gsfc.nasa.gov
TO VERIFY THAT THIS IS THE CORRECT VERSION PRIOR TO USE.

Table 3-1. Radiated Susceptibility Limits for Operations at VAFB

Atlas V at Space Launch Complex 3E							
Emission Source	**Start (GHz)**	**End (GHz)**	**Pad RF Level (V/m)**	**Transport RF Level (V/m)**	**6 dB Margin Added (V/m) [1]**	**Comments**	
Range Sources							
Baseline Level	14 kHz	18	10	10	20	Generic Level	
ARSR-4	1.215	1.4	18.2	33.1	67		
NEXRAD	2.89	2.89	32.3	33.2	67		
Range Radars	5.4	5.9	20	20	40 [2]		
PULSTAR	9.245	9.392	33.1	40.3	81		
Atlas V 4M Fairing Configuration - Standard LV Adapter (C22)							
Vehicle S-Band	2.211	2.211	17.4	---	35	Assumes use of C22	
Vehicle C-Band	5.765	5.765	65.8	---	132	Assumes use of C22	
Spacecraft Open Air, Near Field Emissions							
S-Band	2.2	2.29	12	0	12	Assumes use of 2 Omni Antennas	
X-Band	8.025	8.4	17	0	23	Accounts for Earth Coverage Transmitter	

[1] 6 dB Margin added to the higher level of the two previous columns
[2] Assumes standard PRD is filled with the range

CC-424 The Cooler shall meet all requirements during a 22 second exposure to the radiated emissions defined in the on-orbit operational environment contained in Figure 3-8.

CHECK THE TIRS MIS AT https://tirsmis.gsfc.nasa.gov
TO VERIFY THAT THIS IS THE CORRECT VERSION PRIOR TO USE.

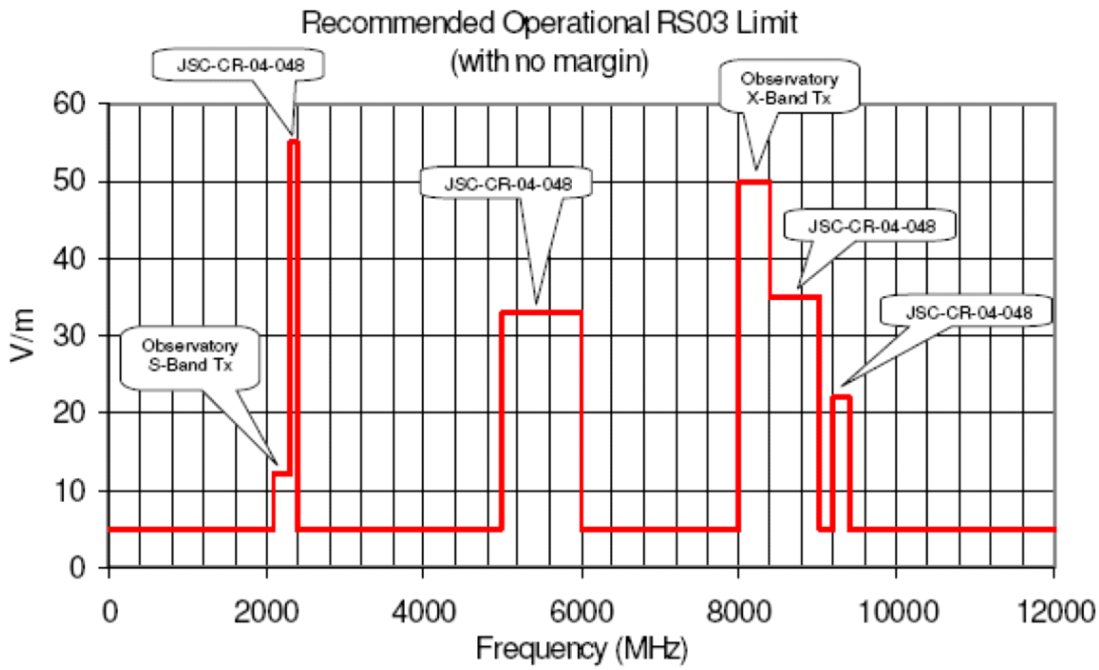

Figure 3-8. On-Orbit Operational Radiated Susceptibility Environment

3.3.3 Space Radiation Environment

CC-428 The Cooler shall meet its lifetime requirement in the radiation environment specified in Figure 3-9 to Figure 3-16.

CHECK THE TIRS MIS AT https://tirsmis.gsfc.nasa.gov
TO VERIFY THAT THIS IS THE CORRECT VERSION PRIOR TO USE.

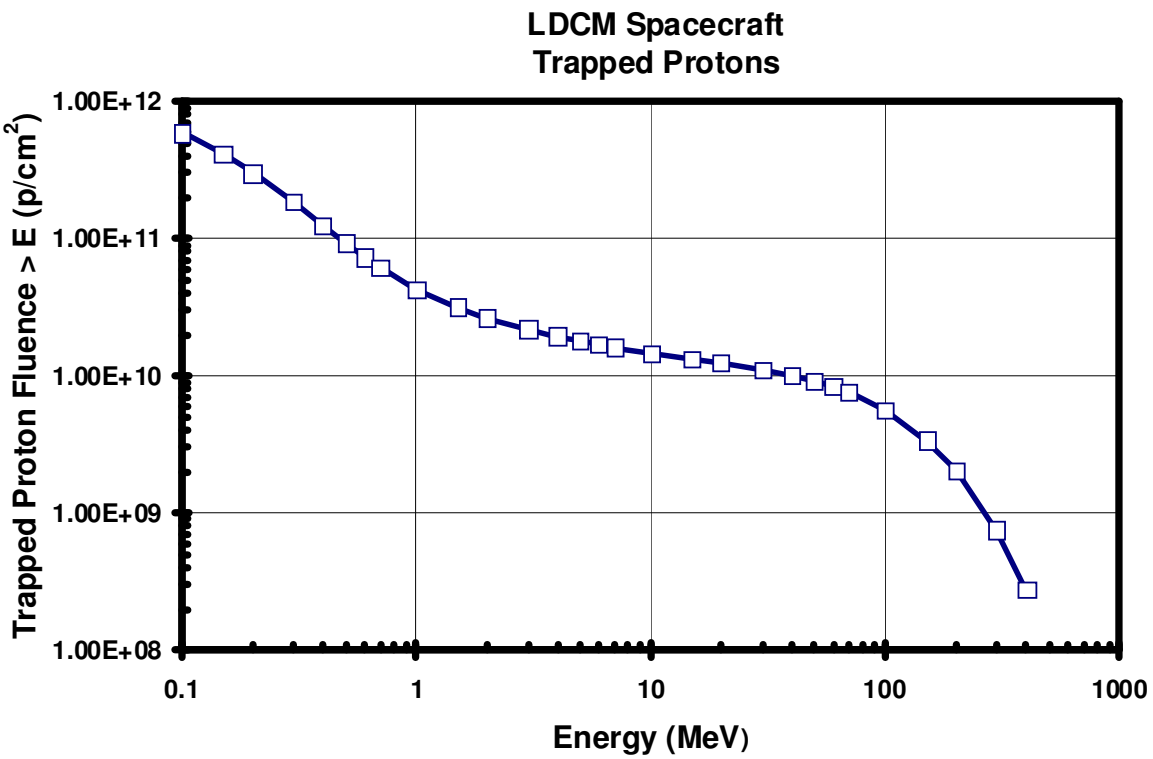

Figure 3-9. Surface Incident Integral Trapped Proton

CHECK THE TIRS MIS AT https://tirsmis.gsfc.nasa.gov
TO VERIFY THAT THIS IS THE CORRECT VERSION PRIOR TO USE.

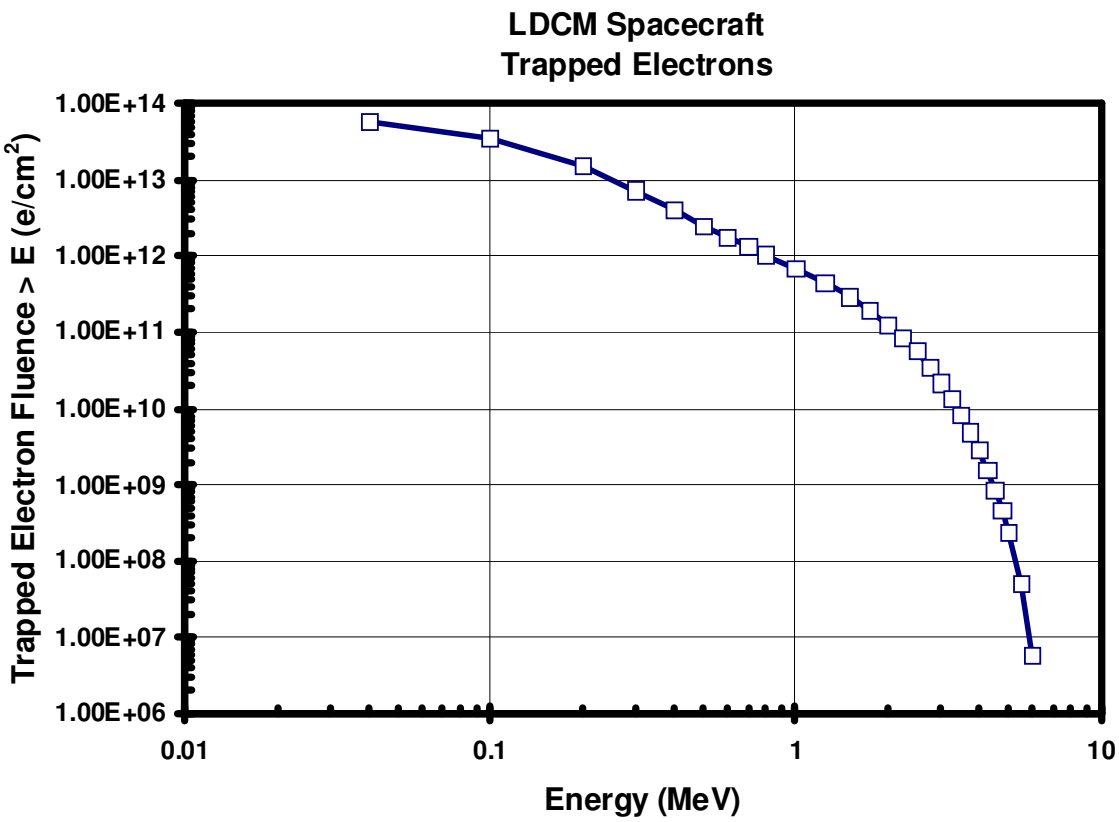

Figure 3-10. Surface Incident Integral Trapped Electron

CHECK THE TIRS MIS AT https://tirsmis.gsfc.nasa.gov
TO VERIFY THAT THIS IS THE CORRECT VERSION PRIOR TO USE.

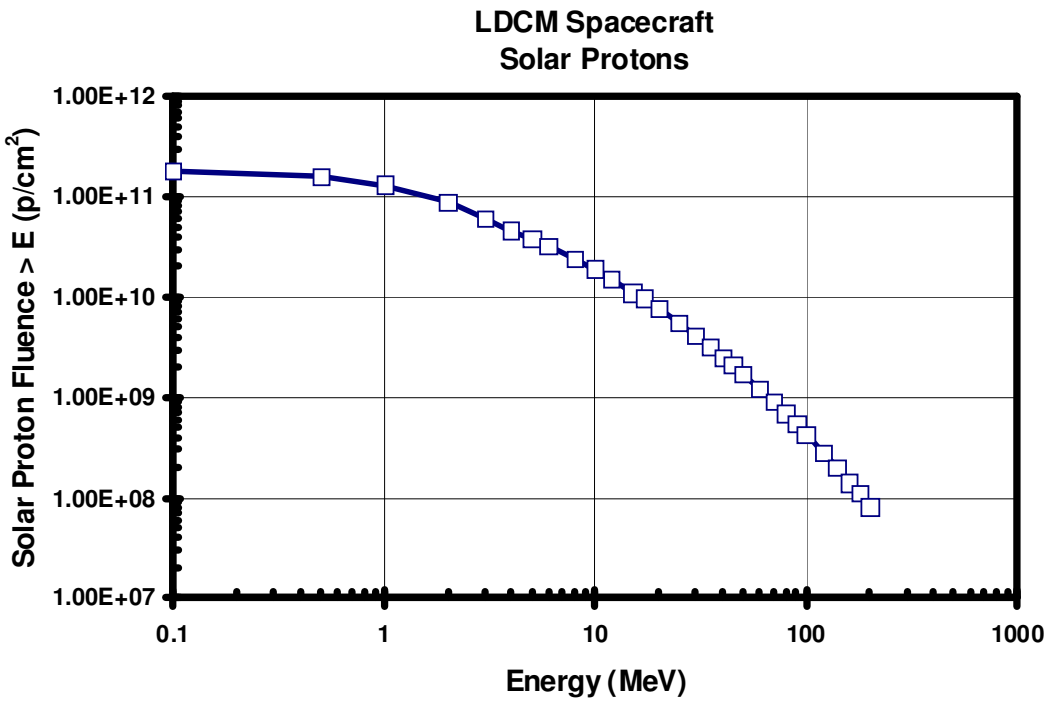

Figure 3-11. Surface Incident Integral Solar Proton

CHECK THE TIRS MIS AT https://tirsmis.gsfc.nasa.gov
TO VERIFY THAT THIS IS THE CORRECT VERSION PRIOR TO USE.

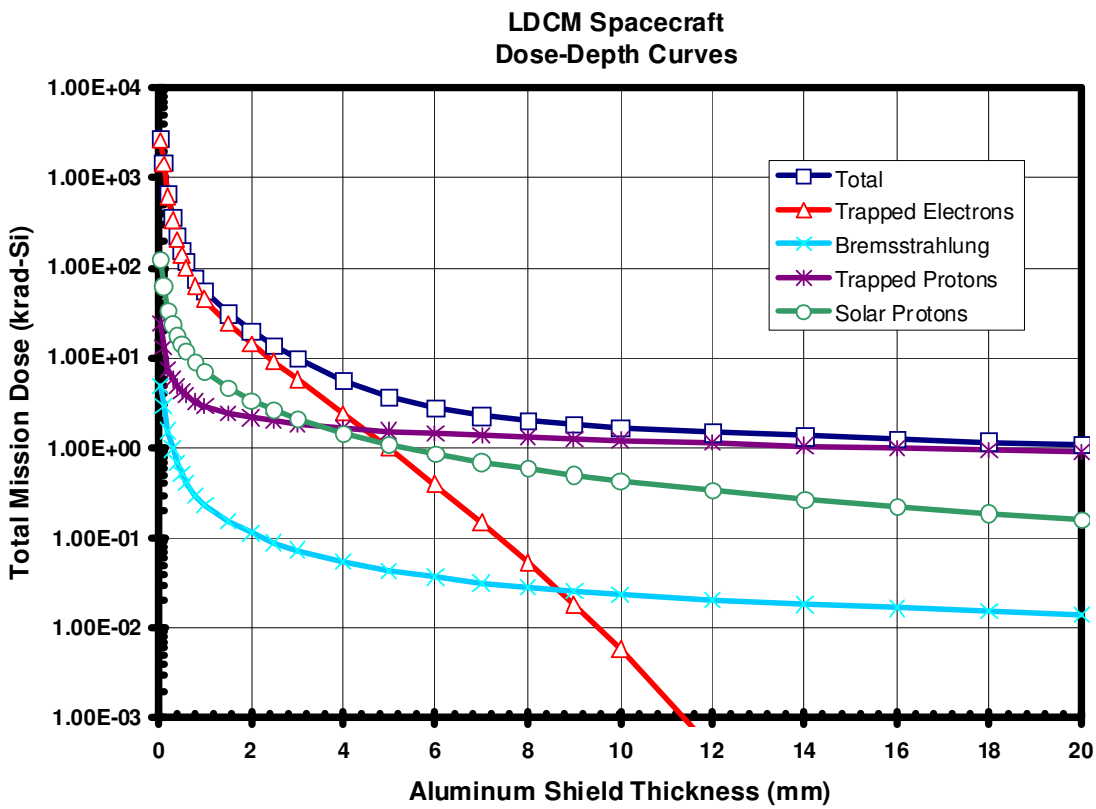

Figure 3-12. Total Ionizing Dose Curves for Dose at the Center of Solid Al Spheres.

CC-437 The Cooler shall utilize EEE Parts capable of meeting 20 krads (Si) Total Ionizing Dose (TID).

CHECK THE TIRS MIS AT https://tirsmis.gsfc.nasa.gov
TO VERIFY THAT THIS IS THE CORRECT VERSION PRIOR TO USE.

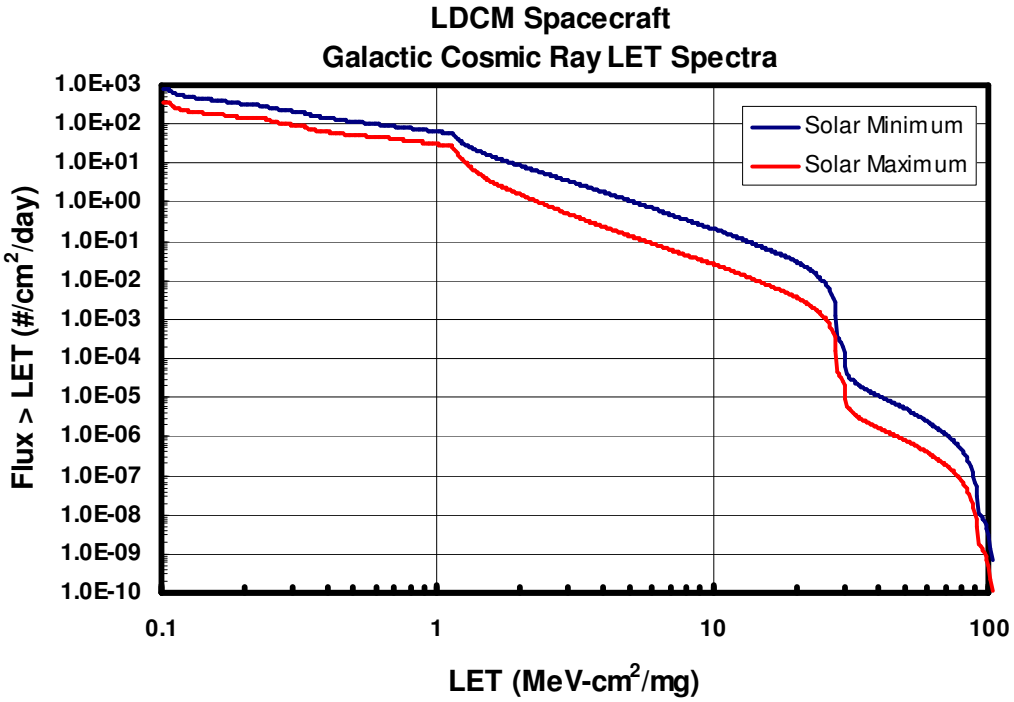

Figure 3-13. LET Spectra Galactic Cosmic Ray Ions Hydrogen through Uranium

Note: Figure 3-13 assumes 100 mils of Al shielding.

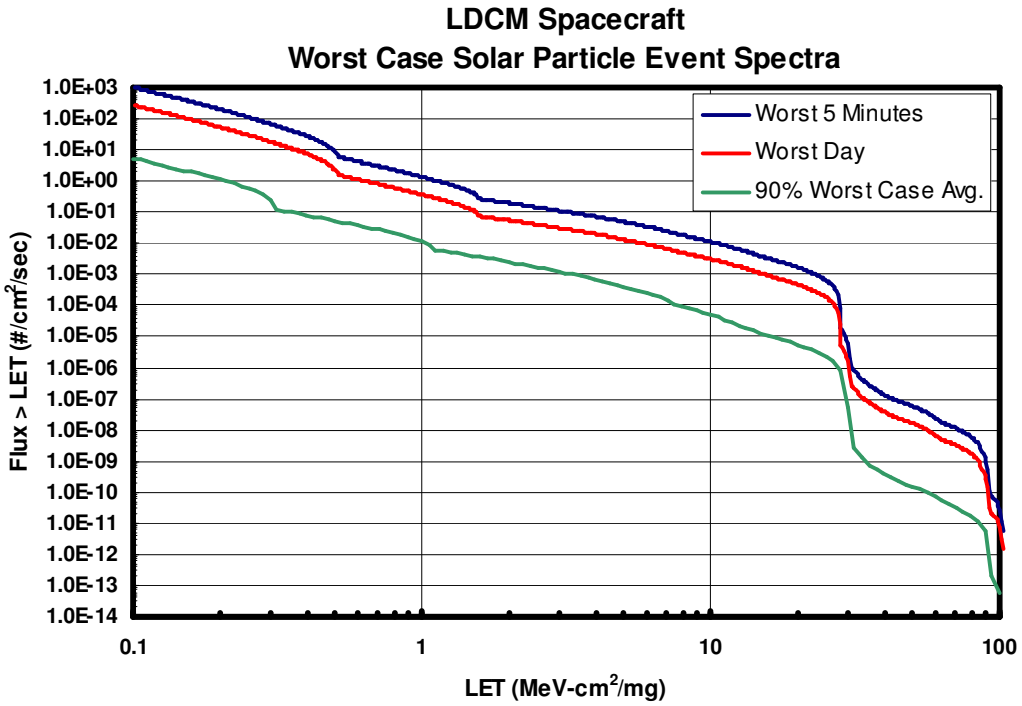

Figure 3-14. LET Spectra for Hydrogen through Uranium - 3 Worst Case Situations

CHECK THE TIRS MIS AT https://tirsmis.gsfc.nasa.gov
TO VERIFY THAT THIS IS THE CORRECT VERSION PRIOR TO USE.

Notes: In Figure 3-14, "Worst 5 Minutes" refers to the average over the peak 5 minutes of the 1989 event, "Worst Day" refers to the average over the worst day of the 1989 event, and "90% Worst Case Avg." refers to the average over the solar maximum period.

CC-444 The Cooler shall utilize EEE Parts capable of meeting a Linear Energy Transfer Threshold (LETth) of >37 MeV/mg/cm2 for soft errors from single events (SEU, Single Event Transients, etc).

CC-445 The Cooler shall utilize EEE Parts capable of meeting a LETth of >80 MeV/mg/cm2 for potential destructive events (SEL, SEB, SEGR,etc.).

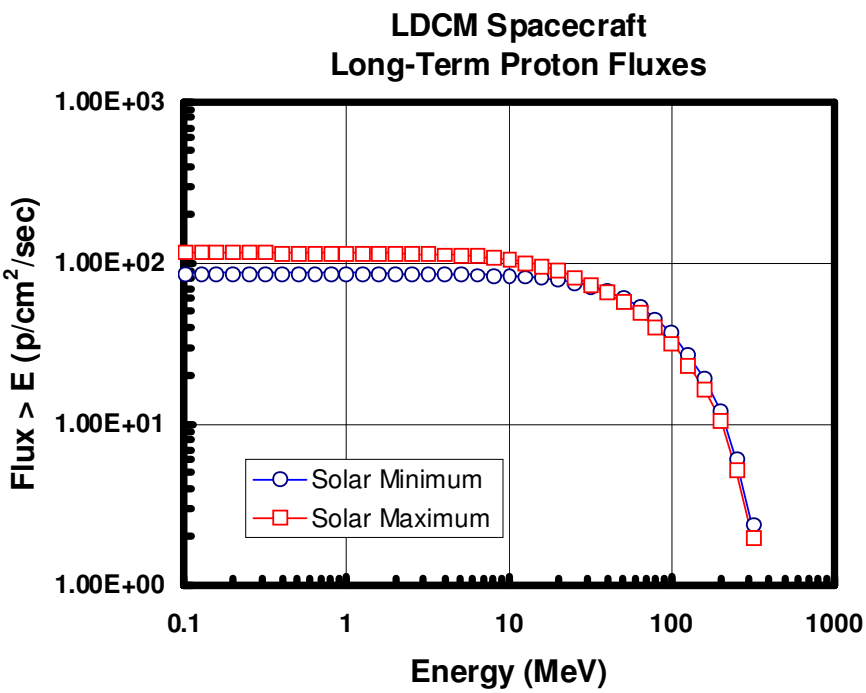

Figure 3-15. Long-Term Integral Proton Fluxes for SEE Evaluation

Notes: Figure 3-15 includes the trapped proton and solar proton fluxes behind 100 mils of aluminum shielding.

CHECK THE TIRS MIS AT https://tirsmis.gsfc.nasa.gov
TO VERIFY THAT THIS IS THE CORRECT VERSION PRIOR TO USE.

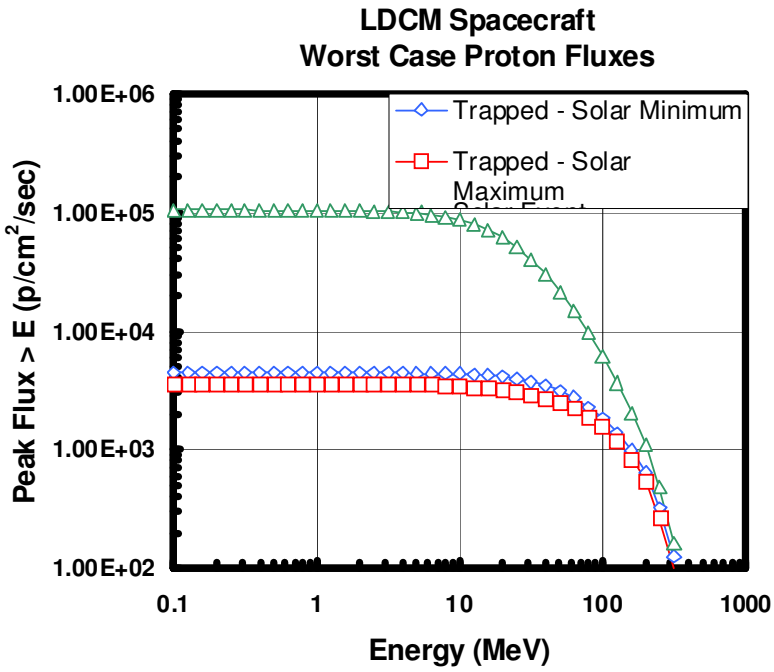

Figure 3-16. Worst Case Integral Proton Fluxes for SEE Evaluation.

Notes: Figure 3-16 includes the peak trapped proton fluxes averaged over a 1 minute interval during solar maximum and solar minimum. Also shown is the worst-case solar proton flux averaged over a 5 minute interval at the 90% confidence level. Calculations are done for 100 mils of aluminum shielding.

3.3.4 Structural & Mechanical Environment

CC-453 The total mass of the Cooler, including the TMU, CCE, and CCE-TMU harnesses shall be less than 30 kg.

CC-454 The total mass of the CCE shall be less than 10 kg.

CC-455 The Cooler shall use coordinates as described in the TIRS-Cooler ICD.

CC-456 The volume of the CCE shall be less than 30.48 cm x 30.48 cm x 30.48 cm.

CC-457 The volume of the TMU shall fit within the volume defined in Figure 3-17.

CHECK THE TIRS MIS AT https://tirsmis.gsfc.nasa.gov
TO VERIFY THAT THIS IS THE CORRECT VERSION PRIOR TO USE.

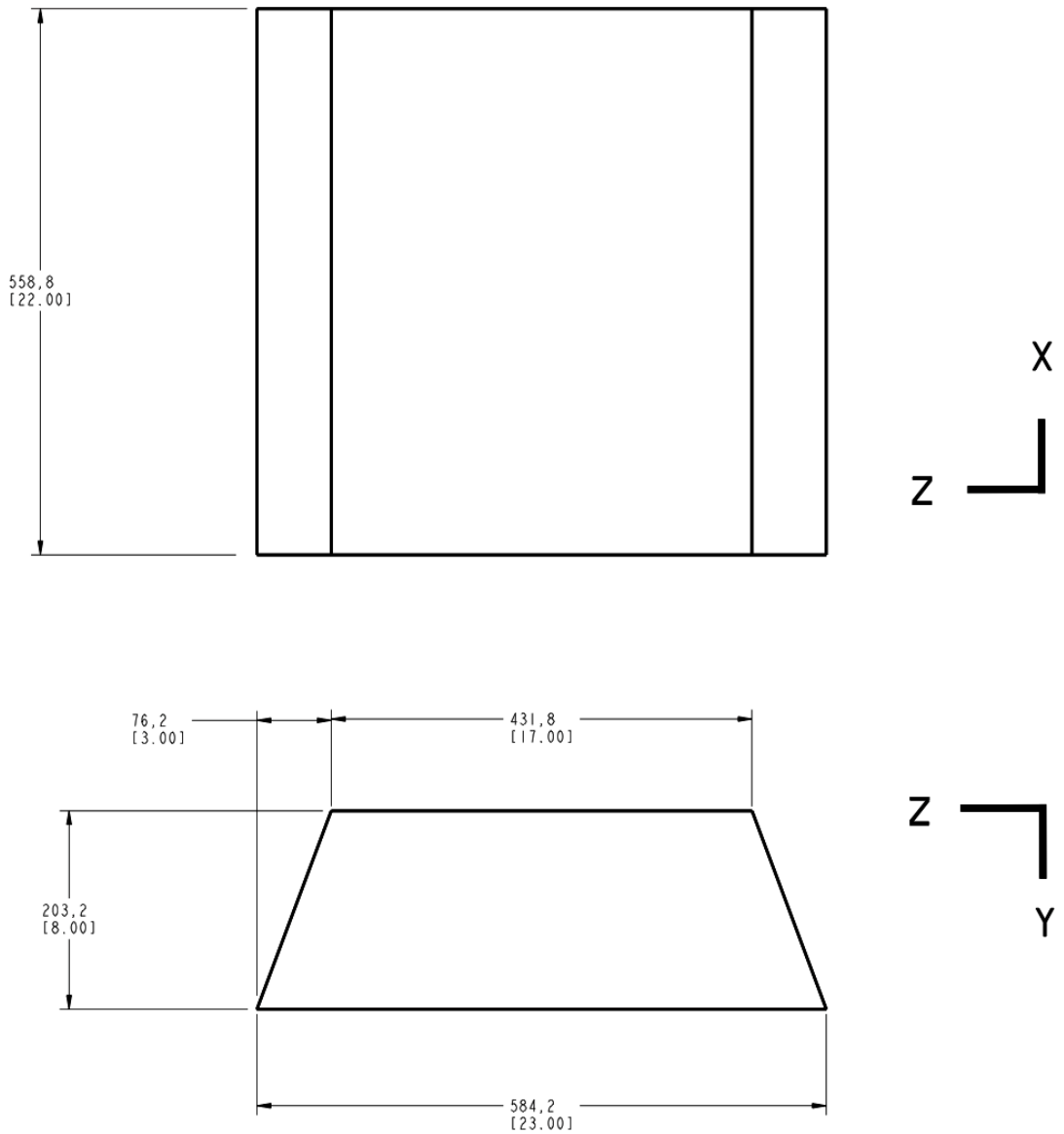

Figure 3-17. TMU Volume (mm, inches in [ ])

CC-460 The CCE to TMU harness length shall be documented in the TIRS-Cooler ICD.

CC-461 The CCE to TMU harness length shall be in the range from 2 to 4 meters.

CC-462 The mass of each Cooler component shall be measured to an accuracy of ±0.1 kg.

CC-463 The center of gravity of each Cooler component, referenced to its respective coordinate axes as documented in the TIRS-Cooler ICD shall be measured in three axes to ±0.003 meters.

Rationale: Measurement in most convenient axis is intended and used to check predictions. Mass balancing is not intended or expected.

CHECK THE TIRS MIS AT https://tirsmis.gsfc.nasa.gov
TO VERIFY THAT THIS IS THE CORRECT VERSION PRIOR TO USE.

CC-465 The Moments of Inertia (MOI) for each Cooler component, referenced to its respective coordinate axes as documented in the TIRS-Cooler ICD shall be predicted through analysis.

CC-466 The Cooler shall meet the performance requirements of this specification after exposure to interface temperatures during launch equal to the Flight Allowable Non-operating temperature range as documented in the TIRS-Cooler ICD.

CC-881 The Cooler shall be designed to satisfy the LV ascent pressure profile as specified in the Atlas 5, Model 401 vehicle Payload Planner's Guide at a maximum depressurization rate of -0.6 psi/sec.

CC-467 The Cooler shall meet the performance requirements of this specification after exposure to the base shake random vibration environment levels defined in Table 3-2.

**CHECK THE TIRS MIS AT https://tirsmis.gsfc.nasa.gov
TO VERIFY THAT THIS IS THE CORRECT VERSION PRIOR TO USE.**

Table 3-2. Random Vibration Test Levels Components

Frequency	ASD Level (g^2/Hz) 22.7-kg (50-lb) or less	
(Hz)	Qualification	Acceptance
20	0.026	0.013
20-50	+6 dB/oct	+6 dB/oct
50-800	0.16	0.08
800-2000	-6 dB/oct	-6 dB/oct
2000	0.026	0.013
Overall	14.1 Grms	10.0 Grms

The acceleration spectral density level may be reduced for components weighing more than 22.7-kg (50 lb) according to:

	Weight in kg	Weight in lb	
dB reduction	= 10 log(W/22.7)	10 log(W/50)	
ASD(50-800 Hz)	= 0.16•(22.7/W)	0.16•(50/W)	for protoflight
ASD(50-800 Hz)	= 0.08•(22.7/W)	0.08•(50/W)	for acceptance

Where W = component weight.

The slopes shall be maintained at + and - 6dB/oct for components weighing up to 59-kg (130-lb). Above that weight, the slopes shall be adjusted to maintain an ASD level of 0.01 g^2/Hz at 20 and 2000 Hz.

For components weighing over 182-kg (400-lb), the test specification will be maintained at the level for 182-kg (400 pounds).

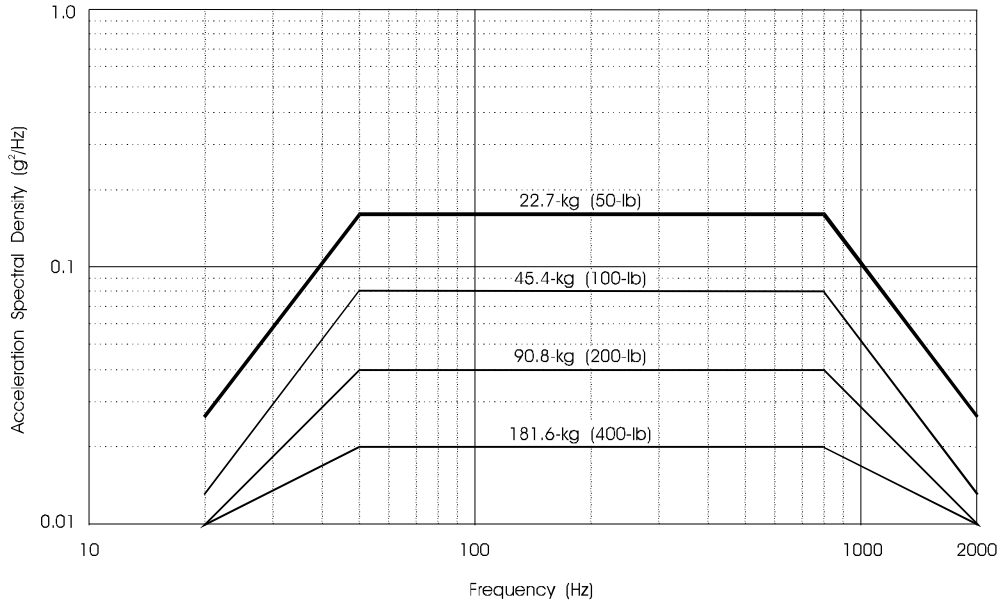

CHECK THE TIRS MIS AT https://tirsmis.gsfc.nasa.gov
TO VERIFY THAT THIS IS THE CORRECT VERSION PRIOR TO USE.

CC-511 The random vibration environment shall be applied in each of the three principal orthogonal axes.

CC-512 For Design and Qualification testing, the Qualification levels and durations shall be applied.

CC-513 If a flight-like qualification unit is not available, the first flight unit shall be subjected to protoflight levels and durations.

CC-514 The remaining flight units shall be subjected to flight acceptance levels and durations.

CC-515 Protoflight test duration shall be 1 minute for each of 3 mutually perpendicular axes.

CC-516 Acceptance test duration shall be 1 minute for each of 3 mutually perpendicular axes.

CC-517 Qualification test duration shall be 2 minutes for each of 3 mutually perpendicular axes.

CC-518 The Cooler shall meet the performance requirements of this specification after exposure to the quasi-static loads due to the low-frequency launch environment. These loads are given in the Mass Acceleration Curve (MAC) for components as shown in Figure 3-18, until a coupled loads analysis is completed. The design loads shown below will be updated based on the results of coupled loads analysis. The breakpoints for the MAC are given in Table 3-3. Linear interpolation may be used between break-points to determine limit load.

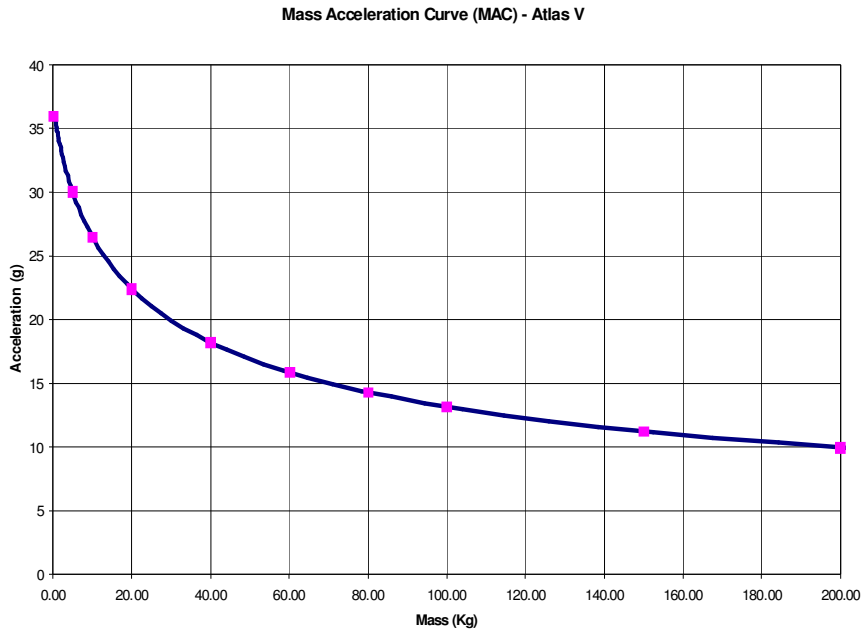

Figure 3-18. Component Mass Acceleration Curve (MAC)

CHECK THE TIRS MIS AT https://tirsmis.gsfc.nasa.gov
TO VERIFY THAT THIS IS THE CORRECT VERSION PRIOR TO USE.

Table 3-3. Component Design Loads (Break Points)

Component Mass (kg)	Limit Load (G, Any Direction)
1.0 or less	36.0
5	30.1
10	26.5
20	22.4
40	18.2
60	15.9
80	14.3
100	13.2
150	11.2
200 Kg. or Greater	10.0

CC-556 The Cooler components shall be designed to show positive margin for limit load using FS=1.25 for yield and FS=1.4 for ultimate.

CC-557 The Cooler components shall be tested to 1.25 times the limit load in 3 mutually perpendicular axes.

CC-558 The Cooler shall be designed to meet performance requirements following exposure to the externally induced shock environment specified in Table 3-4, as well as any self-induced shock. Notes: Testing of externally induced shock will be conducted at the SC level. The need for shock testing of Cooler assemblies will be evaluated on a case-by-case basis, depending on proximity to the shock source and sensitivity of the design to the shock environment (i.e. contains brittle or otherwise sensitive components such as relays).

Table 3-4. Shock Response Spectrum for Cooler Equipment

Assembly (location)	Frequency (Hz)	Max Flight Accel PK g
CCE (S/C Equipment Panels)	100 602-8000 10000	48 628 837
TMU	100 684 - 8000 10000	38 593 791

CHECK THE TIRS MIS AT https://tirsmis.gsfc.nasa.gov
TO VERIFY THAT THIS IS THE CORRECT VERSION PRIOR TO USE.

CC-576 Each separately mounted Cooler component configured for launch, including mounting brackets, shall have a fixed-base frequency greater than 100 Hz (i.e Cooler Powered Off).

3.3.5 Contamination Environment

Contamination control at the TIRS integration facilities will be described in the TIRS Contamination Control Plan (TIRS-SE-PLAN-0010).
The Cooler will be integrated with TIRS in a Class 10,000 per FED-STD-209E (Class 7 per ISO 14644-1) clean room environment and maintained in that environment as much as possible during the integration and test flow.
Note: This satisfies, as a minimum, the requirements described in the Federal Standard Airborne Particulate Cleanliness Classes in Cleanrooms and Clean Zones (FED-STD-209E).

CC-581 Cooler external (non-optical) surface contamination levels shall meet the values shown in Table 3-5, according to the Product Cleanliness Levels and Contamination Control Program, IEST-STD-CC1246D.

Table 3-5. Cooler External (Non-Optical) Surface Contamination Levels

Cooler External (Non-Optical) Surfaces	Particulate	Molecular
Delivery to TIRS	300	A
Launch	400	B
End of Cooldown (BOL)	415	C
EOL	450	G

CC-604 The Cooler shall be compatible with continuous operation in a Class 10,000 or better (ISO 14644-1 Class 7 or better) clean work area.

CC-605 The Cooler external surfaces shall be able to be cleaned without permanent degradation to the instrument. Where this is not possible or not recommended, (e.g., MLI) the contaminated components shall be replaced.

CC-606 Cooler exterior surfaces shall be readily cleanable with IPA using standard wipe techniques. The exterior surfaces shall be maintained at a surface particulate contamination Level 300 and surface molecular contamination Level A according to IEST-STD-CC1246D. Cooler assemblies that are sealed and vented with appropriate filters, such as electronic boxes, may exceed the Level 300 particulate requirement; however, the Level A nonvolatile residue (NVR) requirement must be met.

CC-607 Cooler materials shall be compatible with common cleaning agents.

CC-608 Upon delivery to TIRS, the outgassing rate for all Cooler components shall be less than 4.3x10-12 g/cm2-s.

CC-609 Cooler materials shall meet the minimum outgassing screening criteria as tested according to ASTM E595-93 or equivalent method. The materials shall have a

CHECK THE TIRS MIS AT https://tirsmis.gsfc.nasa.gov
TO VERIFY THAT THIS IS THE CORRECT VERSION PRIOR TO USE.

maximum total mass loss (TML) of 1.0% and a maximum collected volatile condensable material (CVCM) of less than 0.1%.

CC-610 The Cooler vendor shall identify all sources of contamination that can be emitted from the Cooler subsystem and document these sources for GSFC.

CC-611 Hardware shall undergo proper cleaning; including a vacuum bake-out to deplete any volatile material in the Cooler prior to on-orbit operations to meet required outgassing rates.

CC-612 The Cooler vendor shall be responsible for cleaning the Cooler.

3.4 OPERATIONAL REQUIREMENTS

CC-614 All real-time and closed-loop operations shall be handled internally by the Cooler.

CC-615 If the Cooler performs a self-diagnostic, the data shall be reported in a dedicated diagnostic telemetry stream.

CC-616 Cooler assemblies that contain microprocessors, micro-controllers, FPGAs, memory devices, and digital circuitry shall startup and shutdown into known logic states in an orderly internal sequence.

CC-617 The Cooler shall detect and respond to critical faults or operating conditions that have the risk of immediately damaging the Cooler or interfacing systems, and report the fault in a telemetry packet. Note: An example is automatic shut-off of compressors in the event that damaging temperatures or stroke/speed conditions are encountered.

CC-618 The Cooler shall be capable of overriding autonomous function and automatic safing, via ground command.

CC-619 In response to a Cooler fault protection trigger, the Cooler shall enter into a safe configuration that protects the instrument, while preserving the ability to monitor health and safety telemetry and respond to commands.

3.5 DESIGN AND CONSTRUCTION

3.5.1 Materials & Parts

CC-622 The Cooler shall comply with the TIRS Mission Assurance Implementation Plan (MAIP).

3.5.2 Connectors

CC-624 Separate connectors shall be used for each of the following: Primary and Redundant Power, RS-422, Test connection, Discrete Interfaces; and as applicable to the Cooler design.

CHECK THE TIRS MIS AT https://tirsmis.gsfc.nasa.gov
TO VERIFY THAT THIS IS THE CORRECT VERSION PRIOR TO USE.

CC-625	Connectors on a given surface shall be sized, oriented, keyed, or otherwise protected from an improper connection that would result in damage to equipment connected to either end of the harness.
CC-626	The Cooler shall use connectors selected from the GSFC Parts List (EEE-INST-002), or a GSFC-approved equivalent.
CC-627	The Cooler vendor shall not use blind mate electrical connectors.
CC-628	All connectors shall be accessible for mate/demate without removal of any adjacent objects (components, parts, bolts, etc.).
CC-629	When the Cooler is stand-alone, all connectors shall be accessible for mate/demate without the use of any custom tools.
CC-630	The Cooler connectors shall have a minimum of 0.0254 meter clearance provided around the outside of mated connector plugs.
CC-631	All connectors shall be clearly marked with a unique identifier.
CC-632	Connector savers shall be utilized on all flight connectors (both harness and bulkhead sides) prior to final connector/harness mate for flight with an exception for the EMI testing.
CC-633	All connectors, when not mated, shall have either protective covers installed, or shorting connectors installed depending upon the function of the connector.
CC-634	All connectors shall have a minimum of 10% spare pins.

**CHECK THE TIRS MIS AT https://tirsmis.gsfc.nasa.gov
TO VERIFY THAT THIS IS THE CORRECT VERSION PRIOR TO USE.**

APPENDIX A - ACRONYM LIST

Abbreviation/ Acronym	DEFINITION
ASD	Amplitude Spectral Density
ASTM	American Society for Testing and Materials
BOL	Beginning of Life
CBE	Current Best Estimate
CCA	Cooler Compressor Assembly
CCB	Configuration Control Board
CCE	Cooler Control Electronics
CDH	Command & Data Handler
CE	Conducted Emissions
CHA	Cold Head Assembly
CM	Configuration Management
CMN	Common Mode Noise
CMO	Configuration Management Office
CS	Conducted Susceptibility
CVCM	Collected Volatile Condensable Material
DC	Direct Current
EEE	Electrical, Electronic and Electromechanical
EGSE	Electronic Ground Support Equipment
EMC	Electromagnetic Compatibility
EMI	Electromagnetic Interference
EOL	End of Life
EOP	EOL Operating Point
ETAS	Environmental Test Authorization and Summary Form
FM	Flight Model
FPA	Focal Plane Array
FPE	Focal Plane Electronics
FPGA	Field Programmable Gate Array
FSW	Flight Software
GSE	Ground Support Equipment
GSFC	Goddard Space Flight Center

**CHECK THE TIRS MIS AT https://tirsmis.gsfc.nasa.gov
TO VERIFY THAT THIS IS THE CORRECT VERSION PRIOR TO USE.**

HSDB	High Speed Data Bus
ICD	Interface Control Document
ICD	Interface Requirements Control Document
ID	Identification
IEEE	Institute of Electrical and Electronics Engineers
IIRD	Instrument Interface Requirements Document
IT, I&T	Integration and Test
LDCM	Landsat Data Continuity Mission
LETth	Linear Energy Transfer Thershold
LEVR	LDCM Environmental Verification Requirements
LV	Launch Vehicle
MAC	Mass Acceleration Curve
MAIP	Mission Assurance Implementation Plan
MEB	Main Electronics Box
MIL	Military
MLI	Multi-Layer Insulation
MOI	Moment of Inertia
MSFC	Marshall Space Flight Center
MSS	Maximum Steady State
NASA	National Aeronautics and Space Administration
NVR	Non-Volatile Residue
RD	Requirements Document
RE	Radiated Emissions
RS	Radiated Susceptibility
RS	Recommended Standard
SC,S/C	Spacecraft
SCA	Sensor Chip Array
SCTR	Special Calibration Test Requirements
SE	Systems Engineering
SEB	Single-Event Burnout
SEE	Single-Event Effects
SEGR	Single-Event Gate Rupture
SEL	Single Event Latchup
SEU	Single Event Upset

**CHECK THE TIRS MIS AT https://tirsmis.gsfc.nasa.gov
TO VERIFY THAT THIS IS THE CORRECT VERSION PRIOR TO USE.**

SFT	System Functional Test
SSM	Scene Select Mechanism
STD	Standard
TID	Total Ionizing Dose
TIRS	Thermal Infrared Sensor
TLA	Thermal-Link Assembly
TML	Total Mass Loss
TMU	Thermal Mechanical Unit
USGS	US Geological Survey
VAFB	Vandenberg Air Force Base
VCM	Volatile Condensable Material

**CHECK THE TIRS MIS AT https://tirsmis.gsfc.nasa.gov
TO VERIFY THAT THIS IS THE CORRECT VERSION PRIOR TO USE.**