NOTES: UNLESS OTHERWISE SPECIFIED

REVISION				
SYM	ZONE	DESCRIPTION	DATE	APPROVAL
-	-	-	-	-

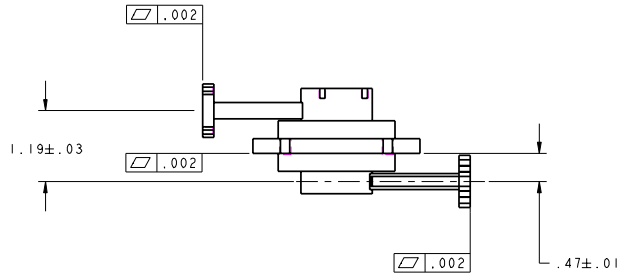

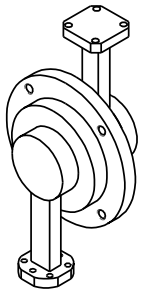

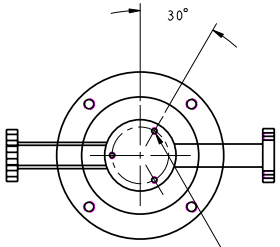

EQUALLY SPACED 3x .112-40UNC-2B
ON A Ø.95 BOLT℄

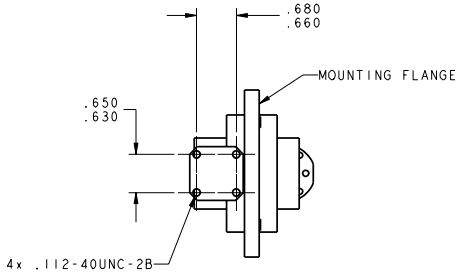

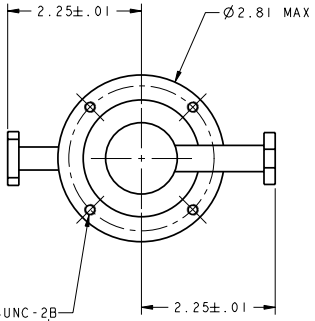

EQUALLY SPACED 4x .190-24UNC-2B
ON A Ø2.40 TO Ø2.45 BOLT℄

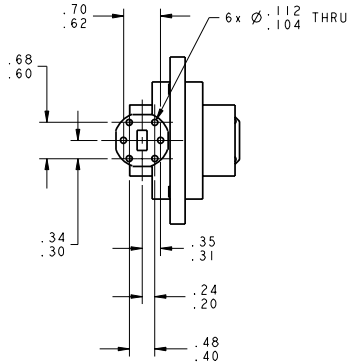

INTERFACE CONTROL DRAWING

ITEM NO.	REQD	REQD	PART NO.	DESCRIPTION	MATERIAL	MATERIAL SPEC & NO.
	—	—	—			xxx

LIST OF MATERIAL

UNLESS OTHERWISE SPECIFIED DIMENSIONS ARE IN INCHES
TOLERANCES:
.xx .xxx ∠ FRACTIONS 125 √
0.03 ±0.010 ±0.5 ± 1/16
REMOVE ALL BURRS AND SHARP EDGES R,010 OR CHAMFER MAX

- ☐ FLIGHT HARDWARE ☐ NON-FLIGHT
- ☐ HARDNESS TEST NOT REQUIRED
- ☐ TEST HARDNESS PER ASTM E-18, LOCATION OPTIONAL
- ☐ TEST HARDNESS PER ASTM E-18 WHERE INDICATED ON FIELD OF DRAWING THUS ●
- ☐ NO NON-DESTRUCTIVE EXAMINATION (NDE) REQ'D
- ☐ NDE REQUIRED PER S-313-009 CODE ____

NEXT ASSEMBLY	USED ON
-	-
-	-

THIS DRAWING WAS PRODUCED USING
SOFTWARE: Pro/ENGINEER VERSION: 2001
FILE NAME: ICD_EL_ROTARY_JOINT REV 1.3+
MODEL NAME: WAVEGUIDE_ROT_JOINT_ELEVATION REV 1.3+

NATIONAL AERONAUTICS AND SPACE ADMINISTRATION **Goddard Space Flight Center** Greenbelt, Maryland

NAME	INIT.	DATE
DESIGNER - - -		
DRAWN -		
CHECKED -		
APPROVED -		
APPROVED -		
APPROVED-STRESS -		
APPROVED-ENGINEER -		

DRAWING INTERPRETED PER GSFC-X673-64-1

ELEVATION ROTARY JOINT ASSEMBLY

GD SK0003 REV 1

CODE: - SCALE: 1/1 WEIGHT: SHEET: 1 OF 1

FOLD LINE

GD SK0003 REV 1 FOLD LINE