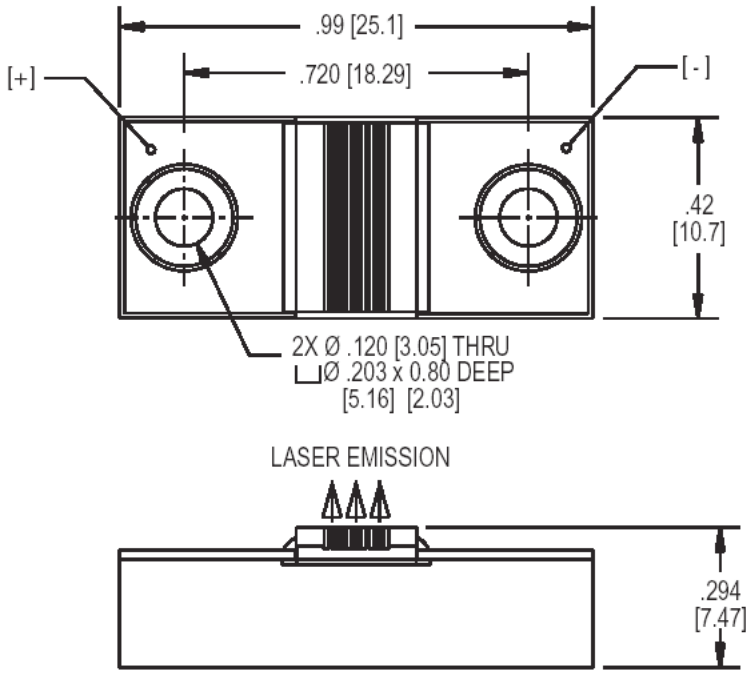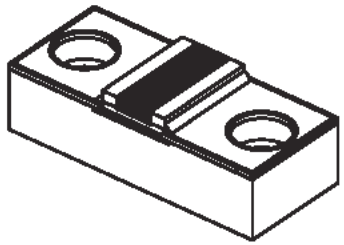
.99 [25.1]
.720 [18.29]
[+]
[-]
.42
[10.7]
2X Ø .120 [3.05] THRU
Ø .203 x 0.80 DEEP
[5.16] [2.03]
LASER EMISSION
.294
[7.47]